SSM PLAN

Stone Container Corporation
Panama City Mill

No. 1 and No. 2 Recovery Boiler Precipitator - Maintenance Checklist

Weekly

1. Check T/R set controllers for proper operation
2. Check rapper starters
3. Check rapper PLC cabinet, ventilation fan and filter
4. Check T/R set controllers for obvious damage
5. Check cabinet ventilation and SCR fans
6. Visually inspect heated shell system
7. Replace filters on pressurizing fans
8. Check T/R sets for obvious damage or leaks, check oil levels, check temperature of T/R sets

Annual Outage

1. Overhaul precipitator

3/10/04

KRAFT CHEMICAL RECOVERY FURNACE SYSTEM STARTUP & EMISSIONS MINIMIZATION CHECKLIST

Below are excerpts from the standard operating procedures that are to be followed to minimize emissions during the startup of the Recovery Furnace system and a checklist for the minimization of particulate emissions during the system startup period. The Recovery Furnace should be fully operational, on-line, and the ESP heated and fully operational firing fossil fuel prior to introduction of Black Liquor into the Recovery Furnace.

Verification of Startup Conditions

The startup period for the Kraft Chemical Recovery Furnace begins when black liquor is burned in the Recovery Furnace. The startup period ends and operation begins when green liquor is produced. The following conditions must be verified prior to introducing Black Liquor into the Recovery Furnace:

- ❑ Has the boiler been properly brought up burning fossil fuel and are all major subsystems operating within standard startup operating conditions? The major subsystems of concern are listed as follows: DCS operation; Feed water system, Condensate system, Boiler blow-down, I.D. fan, Compressed air system, Fossil Fuel firing system, Black Liquor concentrator and Black Liquor recirculating and nozzle feed systems.
- ❑ Is the combustion air distribution system is operating normally and distribution in the combustion zone according to standard operating procedures?
- ❑ Is the flame safety system and rapid drain system operating and has the operator verified that all permissives have been met?

Startup Emissions Minimization Checklist

- ❑ Is the Recovery Furnace boiler operating on the fossil fuel burners and producing steam and is a pilot or auxiliary fuel burner operating at the liquor firing nozzles?
- ❑ Is the ESP heated and are the ESP T-R sets powered and the ESP control system operating?
- ❑ Is the ESP ash recovery system operating?
- ❑ Is the Recovery Furnace Opacity monitoring system operating?
- ❑ Is the smelt recovery system and smelt tank vent scrubber system operating?
- ❑ Is the smelt tank vent scrubber monitoring system operating?

If the Startup Emissions Minimization Checklist has been followed, initiate black liquor firing in the Chemical Recovery Furnace following BLRBAC and standard boiler operating procedures while maintaining the stack gas opacity at less than 20%.

KRAFT CHEMICAL RECOVERY FURNACE SYSTEM SHUTDOWN & EMISSIONS MINIMIZATION CHECKLIST

Below are excerpts from the standard operating procedures that are to be followed to minimize emissions during the shutdown of the Kraft Chemical Recovery Furnace system and a checklist for the minimization of particulate emissions during the system shutdown period. The ESP serving to control emissions from the Recovery Furnace should be fully operational until black liquor is no longer burned and smelt is no longer produced (i.e. green liquor is no longer being produced).

Verification of Shutdown conditions:
The Chemical Recovery Furnace shutdown sequence starts when liquor guns are no longer firing and ends when smelt production has stopped.

Shutdown Emissions Minimization Checklist

- ❑ Full operation of the ESP and Opacity meter(s) should continue after black liquor firing has ceased, until the flow of smelt from the shouts has stopped and the generation of green liquor has also ceased.
- ❑ BLRBAC and standard operating procedures must be followed in shutdown of the Chemical Recovery Furnace,
- ❑ During shutdown of the Chemical Recovery Furnace, manage fossil fuel burning and adjust combustion air to maintain stack gas opacity less than 20 % during the shutdown period.

KRAFT CHEMICAL RECOVERY FURNACE COMBUSTION SYSTEM - MALFUNCTION & EMISSIONS MINIMIZATION CHECKLIST

Corrective action must be taken to address any malfunction of the Recovery Furnace causing greater than 20 % stack gas opacity for more than one hour. Excess stack gas opacity can be caused by boiler combustion system malfunction or problems with the Recovery Furnace Electrostatic Precipitator.

The Recovery Furnace **combustion system malfunctions** listed here are those that could cause stack gas opacity excursions in excess of 20% which requires corrective action. Below is a description of the various malfunctions and associated operational events for the Recovery Furnace combustion system with the corresponding emissions minimization information.

Event	Malfunctions and Emissions Minimization Steps	Operational Effect**
Low Furnace Oxygen	Malfunctions Improper air to fuel ratio Low combustion air flow High liquor or fossil fuel flow I.D. Fan Malfunction Emissions Minimization Steps Continue to burn black liquor and fossil fuel as long as the boiler and ESP are operational and all flame safety permissives are being met. Reduce liquor and/or fossil fuel flow and adjust air to fuel ratio to re-establish less than 20 % stack gas opacity. Following repair, reestablish full liquor and/or fossil fuel flow following the BLRBAC and standard operating procedures while maintaining the stack gas opacity at less than 20%.	 O O O
Liquor Nozzle pluggage or Liquor feed disruption	Malfunctions Liquor Burner Nozzle pluggage, Liquor feed pump failure, Liquor feed line pluggage, Liquor heater failure, Emissions Minimization Steps Continue to burn black liquor and fossil fuel as long as the boiler and ESP are operational and all flame safety permissives are being met. When practicable, reduce or suspend liquor firing until stack gas opacity less than 20% can be maintained. Following repair, reestablish full liquor and/or fossil fuel flow following the BLRBAC and standard operating procedures while maintaining the stack gas opacity at less than 20%.	O, B

Event	Malfunctions and Emissions Minimization Steps	Operational Effect**
Furnace Tube Pluggage	Malfunctions Soot Blower Malfunction, Emissions Minimization Steps Continue to burn black liquor and fossil fuel as long as the boiler and ESP are operational and all flame safety permissives are being met. When practicable, reduce or suspend liquor firing until stack gas opacity less than 20% can be maintained. Following repair, re-establish full liquor and/or fossil fuel flow following the BLRBAC and standard operating procedures while maintaining the stack gas opacity at less than 20%.	O
Emergency Shutdown or Safety System Permissive Failure	Malfunctions Power Failure, Boiler Tube Failure – Rapid Drain Flame safety permissive system failure, Burner system malfunction Emissions Minimization Steps Discontinue black liquor and/or fossil fuel burning following BLRBAC shutdown or standard operating procedures. Following repair, re-establish full liquor and/or fossil fuel flow following the BLRBAC or boiler standard operating procedures while maintaining the stack gas opacity at less than 20%.	S S B B
Opacity Monitor Malfunction	Malfunctions Opacity Monitor Calibration Error Opacity Monitor "Out of Control" DCS System Malfunction Emissions Minimization Steps Continue to burn black liquor and fossil fuel, as before the opacity meter or DCS malfunction, as long as the boiler and ESP are operational and all flame safety permissives are being met. Take maintenance action to repair the opacity meter or DCS as soon as possible.	O O O

Note

"O" indicates that the malfunction or device can be verified and corrected while the source is operational.

"B" indicates the malfunction or device can be verified and corrected while the source is operational, but the malfunctioning device must be bypassed and/or isolated.

"S" indicates that the malfunction cannot be verified or corrected while the system is operational. Such a malfunction will require a temporary shutdown to correct the malfunction.

KRAFT CHEMICAL RECOVERY FURNACE ELECTROSTATIC PRECIPITATOR MALFUNCTION & EMISSIONS MINIMIZATION CHECKLIST

Corrective action must be taken to address any malfunction of the Recovery Furnace causing greater than 20 % stack gas opacity for more than one hour. Excess stack gas opacity can be caused by boiler combustion system malfunction or problems with the Recovery Furnace Electrostatic Precipitator.

The Recovery Furnace **Electrostatic Precipitator malfunctions** listed here are those that could cause stack gas opacity excursions in excess of 20% which requires corrective action. Below is a description of the various malfunctions and associated operational events for the Recovery Furnace Electrostatic Precipitator with the corresponding emissions minimization information.

Event	Malfunctions and Emissions Minimization Steps	Operational Effect**
Single ESP Field Electrical or Mechanical Failure	Malfunctions Broken or grounded electrode in one field Single Transformer-Rectifier failure ESP Control System failure affecting one field Ash Removal System Failure or Pluggage in one field Emissions Minimization Steps Continue to burn black liquor and fossil fuel as long as the boiler and remaining ESP fields are operational. Reduce liquor and/or fossil fuel flow and adjust air to fuel ratio to re-establish less than 20 % stack gas opacity. Following repair, reestablish full liquor and/or fossil fuel flow following BLRBAC and standard boiler operating procedures while maintaining the stack gas opacity at less than 20%.	 B B B B

Event	Malfunctions and Emissions Minimization Steps	Operational Effect**
Single ESP Chamber (side) Electrical or Mechanical Failure	Malfunctions Broken or grounded electrodes in multiple fields Multiple Transformer-Rectifier failure ESP Chamber Control System Failure Chamber Ash Collection System Failure Emissions Minimization Steps Continue to burn black liquor and fossil fuel as long as the boiler and one chamber of the ESP are operational. Close the isolation damper to divert all combustion gasses through the remaining operational ESP Chamber. When practicable, reduce black liquor firing until stack gas opacity from the operating chamber less than 20% can be maintained. Following repair, open the closed chamber isolation damper and power the T-R units after the chamber has been heated to 250°F. After full ESP power has been reestablished, gradually return to full liquor and/or fossil fuel flow following the BLRBAC and standard boiler operating procedures while maintaining the stack gas opacity at less than 20%.	 B B B
Total ESP Electrical or Mechanical Failure	Malfunctions Power Interruption, ESP Control System Failure Ash Collection System Failure Emissions Minimization Steps When practicable, reduce or suspend liquor firing until stack gas opacity less than 20% can be maintained. Following repair, re-establish full liquor and/or fossil fuel flow following the BLRBAC and boiler standard operating procedures while maintaining the stack gas opacity at less than 20%.	 S S
Emergency Shutdown	Malfunctions Power Failure, Boiler Tube Failure – Rapid Drain Emissions Minimization Steps Discontinue black liquor and/or fossil fuel burning following BLRBAC shutdown and boiler standard operating procedures, if required. Following the repair, purge and restart the boiler using BLRBAC, standard operating and SSM startup procedures. Re-establish full liquor and/or fossil fuel flow following the BLRBAC or boiler standard operating procedures while maintaining the stack gas opacity at less than 20%.	 S S

Event	Malfunctions and Emissions Minimization Steps	Operational Effect**
Opacity Monitor Malfunction	Malfunctions Opacity Monitor Calibration Error Opacity Monitor "Out of Control" DCS System Malfunction Emissions Minimization Steps Continue to operate the Recovery Furnace as it was operating before the malfunction of the opacity meter or DCS system occurred, as long as the boiler and ESP are operational and all flame safety permissives are being met. Take maintenance action to repair the opacity meter or DCS as soon as possible.	 O O O

Note

"O" indicates that the malfunction or device can be verified and corrected while the source is operational.

"B" indicates the malfunction or device can be verified and corrected while the source is operational, but the malfunctioning device must be bypassed and/or isolated.

"S" indicates that the malfunction cannot be verified or corrected while the system is operational. Such a malfunction will require a temporary shutdown to correct the malfunction.

Stone Container Corporation
Panama City Mill

No. 1 and No. 2 Smelt Dissolving Tank Scrubbers - Maintenance Checklist

Monthly

1. Conduct vibration analysis on scrubber fan bearings

Annual Outage

1. Inspect spray nozzles for buildup and condition
2. Inspect duct work
3. High pressure wash the fan and the inside of the scrubber
4. Conduct non-destructive testing on fan blades
5. Calibrate flowmeters and d/p cell

3/10/04

SMELT DISSOLVING TANK VENT VENTURI SCRUBBER
MACT II
STARTUP & EMISSIONS MINIMIZATION CHECKLIST

Below are excerpts from the standard operating procedures that are to be followed to minimize particulate emissions during the startup of the Smelt Dissolving Tank system equipped with a Venturi type Vent Scrubber and a checklist for the minimization of emissions during the system startup period. The Recovery Furnace Boiler should be fully operational and the scrubber recirculating flow(s) and venturi differential pressure within normal startup ranges prior to burning black liquor in the Recovery Furnace.

Verification of Startup Conditions

The startup period for the smelting system begins when black liquor is burned in the Recovery Furnace. The startup period ends and operation begins when green liquor is produced. The following conditions must be verified prior to introducing Black Liquor into the Recovery Furnace:

- ☐ Is the smelt tank vent scrubber fan operating and is the scrubber ΔP within the minimum range expected prior to startup?
- ☐ Is the smelt tank vent scrubber recirculation flow and scrubber nozzle pressure within normal limits?

Startup Emissions Minimization Checklist

Begin burning black liquor in the Recovery Furnace and begin weak wash flow to the smelt dissolving tank(s) as soon as smelt is produced. Maintain sufficient scrubber ΔP and the scrubber recirculating flow(s) to avoid established limit excursions during the startup period.

SMELT DISSOLVING TANK VENT VENTURI SCRUBBER

MACT II
SHUTDOWN & EMISSIONS MINIMIZATION CHECKLIST

Below are excerpts from the standard operating procedures that are to be followed to minimize particulate emissions during the shutdown of the Smelt Dissolving Tank system equipped with a Venturi type Scrubber and a checklist for the minimization of emissions during the system shutdown period. The operator should maintain scrubber recirculating flow(s) and venturi differential pressure during the smelt dissolving tank system shutdown period.

Verification of Shutdown Conditions

The Smelt Dissolving Tank system shutdown period begins when black liquor burning in the Recovery Furnace is stopped and the shutdown period ends when green liquor is no longer produced by the smelt dissolving tank. The following conditions must be verified prior to smelt dissolving tank system shutdown:

- ☐ Is the scrubber ΔP within the range expected prior to shutdown?
- ☐ Is the scrubber recirculation flow within normal limits?

Shutdown Emissions Minimization Checklist

The scrubber recirculating flow should the maintained and the scrubber ΔP operated as high as possible during the shutdown period until green liquor is no longer produced from the smelt dissolving tank.

SMELT DISSOLVING TANK VENT VENTURI SCRUBBER

MACT II
MALFUNCTION & EMISSIONS MINIMIZATION CHECKLIST

Below is a description of the various malfunctions and associated operational events for the Smelt Dissolving Tank system equipped with a Venturi type Vent Scrubber and corresponding particulate emission minimization information. These malfunctions and events include such issues as safety interlocks, process alarms, and equipment failures. The malfunctions listed are those that would likely cause excess particulate emissions.

Event	Malfunctions and Emissions Minimization Steps	Operational Effect**
Scrubber ΔP Range Excursion	**Malfunctions** Scrubber fan fouling or failure Venturi Pluggage or Venturi Control Scrubber Differential Guage Malfunction **Emissions Minimization Steps** If the scrubber pressure differential range cannot be maintained, Recovery Furnace black liquor firing and smelt flow should be reduced until the proper ΔP can be restored. If the ΔP cannot be restored in a timely manner, suspend Recovery Furnace liquor firing until repairs can be made.	 S S O
Scrubber Recirculation Flow Excursion	**Malfunctions** Recirculation Pump Malfunction Scrubber Nozzle Pluggage Recirculation Flow meter Malfunction **Emissions Minimization Steps** If the scrubber recirculation flow cannot be restored to normal flow in a timely manner, suspend Recovery Furnace liquor firing until repairs can be made.	 S S O

Event	Malfunctions and Emissions Minimization Steps	Operational Effect**
Scrubber ΔP and Flow Monitoring System Malfunction	**Malfunctions** DCS System Malfunction Instrument Loop Malfunction Recirc. flow meter Calibration Failure **Emissions Minimization Steps** Continue to operate the Recovery Furnace and smelt scrubber as it was operating before the malfunction of the Instrument loop or DCS system occurred, as long as the boiler and Smelt scrubber are operational. Take maintenance action to repair the instrument, meter, or DCS as soon as possible.	 **O** **O** **O**

Note

"O" indicates that the malfunction or device can be verified and corrected while the source is operational.

"B" indicates the malfunction or device can be verified and corrected while the source is operational, but the malfunctioning device must be bypassed and/or isolated.

"S" indicates that the malfunction cannot be verified or corrected while the system is operational. Such a malfunction will require a temporary shutdown to correct the malfunction.

Stone Container Corporation
Panama City Mill

Lime Kiln - Maintenance Checklist

As Needed

1. Rod out differential pressure transmitter sensor openings to break away any encrusted build up in the sensor port

Monthly

1. Lubricate two I.D. fan bearings

Annual outages

1. Clean stack to remove any buildup
2. Inspect scrubber nozzles and venturi
3. Verify that scrubber interlocks function as designed.

Continuously

1. Monitor Fan Vibration

3/10/04

LIME KILN AND KILN SCRUBBER SYSTEM

MACT II
STARTUP & EMISSIONS MINIMIZATION CHECKLIST

Below are excerpts from the standard operating procedures that are to be followed to minimize particulate emissions during the startup of the Lime Kiln and Lime Kiln Scrubber system and a checklist for the minimization of emissions during the system startup period. The Lime Kiln should be fully operational and the scrubber recirculating flows and venturi differential pressure within normal startup ranges prior to introduction of Lime Mud into the Kiln.

Verification of Startup Conditions

The Lime Kiln startup period is defined and beginning when dewatered lime mud is feed to the kiln at a sustainable. The Lime Kiln startup period ends and operation begin when the kiln is producing reburned lime (when bucket elevator operation is required). The following conditions must be verified prior to introducing lime mud into the Kiln:

- ☐ Is the front-end and burner operation stable and is the flame safety system engaged and has the system verified that all permissives have been met?
- ☐ Is the lime mud washing and precoat filter system operating?
- ☐ Is the Lime Kiln combustion system and I.D. fan operation stable and balanced?

Startup Emissions Minimization Checklist

- ☐ Is the scrubber ΔP within the normal range expected prior to lime mud addition?
- ☐ Is the scrubber recirculation flows (Bull and Tangential) within normal limits?
- ☐ Begin lime mud flow to the Kiln, gradually increase the lime mud flow to normal production levels while maintaining the sufficient scrubber ΔP and the scrubber recirculating flows to avoid established limit excursions.

LIME KILN AND KILN SCRUBBER SYSTEM

MACT II
SHUTDOWN & EMISSIONS MINIMIZATION CHECKLIST

Below are excerpts from the standard operating procedures that are to be followed to minimize particulate emissions during the shutdown of the Lime Kiln and Lime Kiln Scrubber system and a checklist for the minimization of emissions during the system shutdown period. The operator should maintain scrubber recirculating flows and venturi differential pressure during the Kiln shutdown period.

Verification of Shutdown Conditions

Lime Kiln shutdown period begins when lime mud flow falls below 30 gpm for a period of 30 minutes and ends when the mud flow is zero and the reburned lime bucket elevator is off for more than 30 minutes. The following conditions must be verified prior to the Kiln shutdown:

- ☐ Is the scrubber ΔP within the range expected prior to shutdown?
- ☐ Is the scrubber recirculation flows within normal limits?

Shutdown Emissions Minimization Checklist

Begin reducing lime mud flow to the Kiln, gradually decrease the lime mud flow while maintaining the scrubber recirculating flows and the sufficient scrubber ΔP to avoid established limit excursions. The scrubber recirculating flow should the maintained and the scrubber ΔP operated as high as possible until lime is no longer entering or leaving the kiln and the reburned lime bucket elevator is no longer needed.

LIME KILN SCRUBBER

MACT II
MALFUNCTION & EMISSIONS MINIMIZATION CHECKLIST

Below is a description of the various malfunctions and associated operational events for the Lime Kiln Scrubber system with the corresponding particulate emissions minimization information. These malfunctions and events include such issues as safety interlocks, process alarms, and equipment failures. The malfunctions listed are those that would likely cause excess particulate emissions.

Event	Malfunctions and Emissions Minimization Steps	Operational Effect**
Kiln Scrubber ΔP Range Excursion	**Malfunctions**	
	I.D. fan Failure	**O**
	Venturi Pluggage	**S**
	High Mud Flows	**O**
	Kiln Dusting or poor Mud Washing	**O**
	Kiln Combustion System Malfunction	**O**
	Scrubber Differential Guage Malfunction	**O**
	Emissions Minimization Steps	
	If the scrubber pressure differential range cannot be maintained, lime mud flow should be reduced until the proper ΔP can be restored. If the ΔP cannot be restored in a timely manner, suspend mud flow until repairs can be made.	
Kiln Scrubber Recirculation Flow Excursion	**Malfunctions**	
	Recirculation Pump Malfunction	**S**
	Scrubber Nozzle Pluggage	**S**
	Recirculation Flow meter(s) Malfunction	**O**
	Emissions Minimization Steps	
	If the scrubber recirculation flow cannot be restored to normal flow in a timely manner, suspend mud flow until repairs can be made.	

Event	Malfunctions and Emissions Minimization Steps	Operational Effect**
Scrubber ΔP and Flow Monitoring System Malfunction	**Malfunctions**	
	Instrument Loop Malfunction	**O**
	Bull/Tan. flow meter Calibration Failure	**O**
	Emissions Minimization Steps	**O**
	Continue to operate the Kiln and scrubber as it was operating before the malfunction of the Instrument loop occurred, as long as the both Kiln and scrubber are operational. Take maintenance action to repair the instrument or meter as soon as possible.	

Note

"O" indicates that the malfunction or device can be verified and corrected while the source is operational.

"B" indicates the malfunction or device can be verified and corrected while the source is operational, but the malfunctioning device must be bypassed and/or isolated.

☐ "S" indicates that the malfunction cannot be verified or corrected while the system is operational. Such a malfunction will require a temporary shutdown to correct the malfunction.

11/9/06 SSM PLAN OUTLINE– PANAMA CITY MILL

THE FOLLOWING SSM PLAN OUTLINE IS THE TEXT VERSION OF THE SSM PLAN FOR THE PANAMA CITY MILL THAT HAS BEEN CONVERTED TO ELECTRONIC FORMAT IN A FINAL, LINKED, WEB-BASED, OPERATOR INTERACTIVE, LAN VERSION OF THE PLAN.

THE ATTACHED OUTLINE INCLUDES A LIST OF POTENTIAL EXCESS EMISSIONS AND FOUL CONDENSATE OVERLOWS THAT WOULD TRIGGER THE CLUSTER RULE SSM REQUIREMENTS. FOR THE PANAMA CITY MILL, THERE ARE SIX (6) SEPARATE PROCESS SSM MODULES. INCLUDED IN EACH SSM PROCESS MODULE ARE SEPARATE STARTUP, SHUTDOWN AND MALFUNCTION EMISSION (OR SPILL) MINIMIZATION PROCEDURES AND REPORTS, AS WELL AS A DESCRIPTION OF PROCESS.

THE SSM PLAN IS A LIVING DOCUMENT THAT CAN BE CHANGED AT ANY TIME. THE SSM PLAN SHOULD BE REVIEWED AND EDITED BY THE MILL'S DESIGNATED SSM PLAN EDITOR AND RETURNED WITH CORRECTIONS OR CHANGES TO JAN FEKERTY IN OUR JACKSONVILLE OFFICE FOR PERMANENT MODIFICATIONS TO THE PLAN.

CLUSTER RULE
Startup, Shutdown, and Malfunction (SSM) Plan

Startup, Shutdown, and Malfunction Plan Requirements:

"The owner or operator of an affected source shall develop and implement a written SSM plan that describes, in detail, procedures for operating and maintaining the source during periods of startup, shutdown and malfunction and a program of corrective action for malfunctioning process and air pollution control equipment used to comply with a relevant standard." At all times, including SSM, the owner must operate any source and associated control equipment in a manner consistent with good air pollution control practices for minimizing emissions at least to the levels required by all relevant standards. Malfunctions must be corrected as soon as practicable in accordance with the SSM plan.

At the Panama City Mill a Startup, Shutdown and Malfunction Plan is required for : The LVHC NCG collection/combustion system, the Foul Condensate collection system, the Condensate Treatment System, the Batch Digester System, the Pulp Bleaching System, and the Evaporator System.

The following SSM Plan is organized by process area and includes Startup or Shutdown Plans for each area as well as a response to Malfunction excess emissions or foul condensate spills. The key to implementing this plan is recognizing the occurrence of the Startup or Shutdown or excess emissions or regulated "foul" condensate spills. Eventually, electronic prompting of the operator by these excess emission events or spills is anticipated. The result of following the SSM plan is the documentation required by the regulation as follows:

Documentation for Startup, Shutdown, Malfunction Plan

The following information must be recorded by the **Operator**:

1. Occurrence and duration of each startup, shutdown or malfunction of process equipment;
2. Occurrence and duration of each startup, shutdown or malfunction of air pollution control equipment;
3. Actions taken during periods of startup, shutdown or malfunction if such actions are different from the procedures specified in the SSM plan;
4. Documentation that demonstrates conformance with the SSM plan when actions are taken in accordance with the SSM plan;
5. Each period (dates and times) when a continuous monitoring system is inoperative or malfunctioning;
6. Dates and times of excess emissions and parameter monitoring exceedences during startup, shutdown and malfunction conditions;
7. Corrective actions taken or preventive measures adopted to remedy malfunction conditions.

The following information must be recorded by the **Operator** from information supplied by the **Maintenance Department**:

1. Nature and cause of each malfunction (if known).
2. All maintenance performed on process or air pollution control equipment to repair a SSM malfunction.

The following information must be recorded by the **Maintenance Department**:

1. All routine or regular maintenance performed on the air pollution control equipment required for compliance with the Cluster Rule (i.e. – Condensate treatment - Steam Stripper, etc. or NCG or SOG Combustion – Lime Kiln, No. 3 or No. 4 Power Boiler).
2. All calibrations or work done on the monitoring system required by the Cluster Rule (Stripper steam, Bleach Plant Scrubber, condensate, temperature, spills, bypass valves).

Following are examples of venting or condensate spills that will trigger SSM requirements and examples of how the electronic (linked) version SSM plan will be organized to respond: **(NOTE: THE FOLLOWING "LINKED" PROCESS SSM PLANS ARE COLOR CODED)**

1. The SSM plan is triggered when an NCG source is operating and the LVHC-NCG system collection valve at the source is open. These LVHC-NCG collection system source valves are located at evaporator/concentrator hotwells and/or after-condenser vent, (batch) Blow Heat Accumulator 2nd Condenser, turpentine condensers and decanters, foul condensate collection tanks, and stripper feed tanks.

   Example: In the case of the operator receiving information that the LVHC-NCG source vent collection valve at the evaporator hotwell is open and venting as a result of a malfunction of a NCG system component, the operator would be automatically directed or would:
   - **Trigger the SSM plan for the LVHC-NCG collection system**
   - **Choose the LVHC-NCG collection system - malfunction SSM plan**
   - **Follow the plan and then complete the NCG system - malfunction SSM report.**
2. Bypass of the NCG or SOG combustion device is to be monitored. Even though bypass of the combustion device could occur for as much as 87.6 hours/yr. without permit violation, the SSM plan is required whenever the backup device fails and the bypass valve is open venting gas to the atmosphere. The backup device for SOG combustion, is the other (either #3 or #4 Bark Boiler). In the case of NCG combustion device bypass, the SSM plan, specific to the NCG combustion device bypassed (Kiln or No. 4 Power Boiler) should be followed in the event of bypass valve opening.

   Example: In the case of the digester or evaporator systems operating **and** the bypass valves being open at both primary, Kiln, and secondary, No. 4 Boiler, NCG combustion devices, the operator would be automatically directed or would:
   - **Trigger the SSM plan for the Kiln**
   - **Choose the Kiln - malfunction SSM plan**
   - **Follow the plan and then complete the NCG system - malfunction SSM report.**
3. The SSM plan is triggered when a source diversion valve on the foul condensate collection system is open (typically due to high conductivity) or there is an overflow of a hotwell or other foul condensate tank or line (pump failure) while the source is operating. The source diversion valves are located at the evaporator/concentrator hotwells, turpentine decanter, (batch) blow heat accumulator overflow, and NCG system condensate collection tanks. (Note: The SSM plan is triggered by hotwell overflow only if the evaporator hotwell is connected to the foul condensate collection system.)

   Example: In the case of the operator becoming aware of the diversion of the turpentine decanter underflow (condensate) to the sewer while the digester system is operating, the operator would be automatically directed or would:
   - **Trigger the SSM plan for the Foul Condensate Collection System SSM Plan**
   - **Choose the Foul Condensate Collection system – malfunction SSM plan**
   - **Follow the plan and then complete the Foul Condensate Collection System - malfunction SSM report.**
   -

SSM PLAN "TRIGGER" LIST

(SSM PLANS IN THE FOLLOWING DOCUMENT ARE LINKED TO THE LIST OF "SSM TRIGGER EVENTS" BY COMMON COLOR)

- NCG COLLECTION / COMBUSTION SYSTEM STARTUP
- NCG COLLECTION / COMBUSTION SYSTEM SHUTDOWN
  No. 4 POWER BOILER NCG Combustion System Bypass
- LIME KILN NCG Combustion System Bypass
- NCG COLLECTION SYSTEM Rupture Disk Failure
- NCG COLLECTION SYSTEM Main Vent Valve Open
- NCG COLLECTION SYSTEM Steam Eductor System Failure
- 1-A EVAPORATOR NCG SYSTEM Source Vent Valve Opening
- Pre EVAPORATOR NCG SYSTEM Source Vent Valve Opening
- 3 EVAPORATOR NCG SYSTEM Source Vent Valve Opening
- 1-A EVAPORATOR NCG SYSTEM Rupture Disk Opening
- Pre EVAPORATOR NCG SYSTEM Rupture Disk Opening
- 3 EVAPORATOR NCG SYSTEM Rupture Disk Opening
- B.H. ACCUMULATOR 2^{NDARY} CONDENSER NCG Vent Valve Opening
- B.H. ACCUMULATOR 2^{NDARY} CONDENSER NCG Rupture Disk Opening
- TURPENTINE DECANTER NCG SYSTEM Rupture Disk Opening
- TURPENTINE DECANTER NCG SYSTEM Source Vent Valve Opening
- TURPENTINE CONDENSER NCG SYSTEM Rupture Disk Opening
- TURPENTINE CONDENSER NCG SYSTEM Source Vent Valve Opening

- FOUL CONDENSATE COLLECTION SYSTEM STARTUP
- FOUL CONDENSATE COLLECTION SYSTEM SHUTDOWN
- FOUL CONDENSATE SYSTEM Turpentine Decanter Overflow

- STRIPPER and NO 3 or 4 BOILER SOG COMBUSTION SYSTEM STARTUP
  STRIPPER and NO. 3 or 4 BOILER SOG COMBUSTION SYSTEM SHUTDOWN
- No. 3 or 4 POWER BOILER Stripper Off-Gas Combustion System Bypass
- STRIPPER SYSTEM Feed Tank Overflow
- STRIPPER OFF GAS (SOG) Rupture Disk Failure
- STRIPPER SYSTEM Steam-to-Condensate Ratio Imbalance
- STRIPPER SYSTEM Steam flow Monitor Failure
- STRIPPER SYSTEM Condensate flow Monitor Failure
- STRIPPER SYSTEM Condensate feed temperature Monitor Failure
- STRIPPER SYSTEM Stripped Condensate temperature Monitor Failure

- DIGESTER SYSTEM STARTUP
- DIGESTER SYSTEM SHUTDOWN
- DIGESTER SYSTEM BLOW TANK Pressure Relief
- DIGESTER SYSTEM B.H ACCUMULATOR Tank Pressure Relief
- DIGESTER SYSTEM B.H. ACCUMULATOR Condensate High Conductivity
- DIGESTER SYSTEM B.H. ACCUMULATOR Condensate Overflow

SSM PLAN "TRIGGER" LIST (continued)

(SSM PLANS IN THE FOLLOWING DOCUMENT ARE LINKED TO THE LIST OF "SSM TRIGGER EVENTS" BY COMMON COLOR)

- **BLEACHING SYSTEM STARTUP**
- **BLEACHING SYSTEM SHUTDOWN**
- **BLEACH PLANT VENT COLLECTION SYSTEM Bypass or Vent**
- **BLEACHING SYSTEM SCRUBBER pH or ORP Range Alarm**
- **BLEACHING SYSTEM SCRUBBER Gas Flow Range Alarm**
- **BLEACHING SYSTEM SCRUBBER Liquid Flow Alarm**
- **BLEACHING SYSTEM SCRUBBER System Electrical or Mech. Failure**

- **1-A EVAPORATOR SET STARTUP**
- **1-A EVAPORATOR SET SHUTDOWN**
- **1-A EVAPORATOR SET Hogging Jet Operation***
- **1-A EVAPORATOR SET Condensate High Conductivity Diversion****
- **1-A EVAPORATOR SET Hotwell Overflow****
- **Pre EVAPORATOR SET Startup**
- **Pre EVAPORATOR SET Shutdown**
- **Pre EVAPORATOR SET Hogging Jet Operation***
- **3 EVAPORATOR SET Startup**
- **3 EVAPORATOR SET Shutdown**
- **3 EVAPORATOR SET Hogging Jet Operation***

***at times other than startup when the evaporator is operating on liquor**

**** only when <u>not</u> producing Bleached Hardwood Pulp**

THE SSM PLAN FOR THE NON-CONDENSABLE GAS (NCG) COMBUSTION/COLLECTION SYSTEM HAS BEEN TRIGGERED!

PLEASE SELECT THE APPROPRIATE SSM PLAN OR INFORMATION:

1. NCG SYSTEM START-UP PLAN & REPORT FORMS
2. NCG SYSTEM SHUTDOWN PLAN & REPORT FORMS
3. NCG MALFUNCTION PLAN & REPORT FORMS
4. NCG SYSTEM DESCRIPTION & FLOW DIAGRAM

1. NON-CONDENSABLE GAS (NCG) COLLECTION/COMBUSTION SYSTEM STARTUP EMISSIONS MINIMIZATION CHECKLIST

The plan for the transition from startup to normal NCG system operations and a checklist for the minimization of emissions during the LVHC NCG system start-up follows.

Prior to operating the digester and evaporator systems generating Non-Condensable Gas (NCG), the NCG Collection and Combustion system must be operating. The period of time defining the startup of the NCG Collection/Combustion System is as follows: the startup of the NCG system begins with the introduction of Non-Condensable Gas from any LVHC source to the NCG Collection/Combustion system. The startup of the NCG Collection/Combustion system ends with the successful addition of the last digester or evaporator system NCG vent stream to the system.

Pre-Startup Checklist

- Is the LVHC NCG Collection system operating and is an adequate and consistent supply of steam available for the operation of the steam eductors?
- Have all the drain valves been closed and the proper water levels established for the LVHC NCG condensate loop seals, low point drains, and mist eliminator drains?
- Do all NCG system rupture discs appear to be closed and do the flame arresters appear to be in the normal operating condition?
- If the No. 4 Power Boiler is to be used for NCG combustion: Is the No. 4 Boiler operating steadily at furnace temperatures above 1200°F, have the flame safety permissives been met, is the oil burner operating, and is steam flowing to the NCG burner?
- If the Lime Kiln is to be used: Is the Lime Kiln operation stable and balanced, does the chain zone and burner zone of the kiln body contain lime mud, is the flow of lime mud to and calcined lime from the kiln steady, is the front-end and burner operation stable and is the flame safety system operating and has the system verified that all permissives have been met, is the kiln body rotation at the appropriate speed, and is the kiln body under a slight negative pressure?

Startup Emissions Minimization Checklist

- The vent collection systems for each process system will be diverted into the collection header (and NCG source vents closed), one at a time. If addition of any source vent disrupts No. 4 Boiler or Kiln operation, the No. 4 Boiler or Kiln will be allowed to reach a normal operating state prior to switching the next LVHC source into the collection header.

- Startup each area process source and collect the LVHC NCG vent gases into the collection header following the startup procedures for each process system, and check all NCG gas vents to verify that the control valves are in the proper position.

THE SSM INCIDENT REPORT ON THE FOLLOWING PAGE MUST BE COMPLETED BY THE OPERATOR!

NCG SYSTEM SSM STARTUP INCIDENT REPORT:

WAS THE SSM CHECKLIST FOLLOWED IN NCG SYSTEM STARTUP?* _____

TIME FIRST LVHC PROCESS SOURCE VENT ADDED TO NCG SYSTEM _____

TIME LAST LVHC PROCESS SOURCE VENT ADDED TO NCG SYSTEM _____

TIME OF NCG SYSTEM VENTING DUE TO STARTUP INITIATION: _____

TIME THAT NCG VENTING DUE TO STARTUP ENDED: _____

OPERATOR NAME: _____ *TIME:*_____ *DATE:*_____

**IF THE SSM PLAN WAS NOT FOLLOWED IN STARTING THE NCG SYSTEM, PLEASE EXPLAIN WHAT WAS DONE:* _____

_____

2. NON-CONDENSABLE GAS (NCG) COLLECTION/COMBUSTION SYSTEM SHUTDOWN -EMISSIONS MINIMIZATION CHECKLIST

Below is the plan for the transition from normal NCG system operations to shutdown and a checklist for the minimization of emissions during the LVHC NCG system shutdown.

Prior to stopping operation of the NCG Collection and Combustion system, the operation of all the digester and evaporator systems generating Non-Condensable Gas (NCG) must be suspended. The period of time defining the shutdown of the NCG Collection/Combustion System is as follows: the shutdown of the NCG system begins with the shutdown of any LVHC process source vented to the NCG Collection/Combustion system. The shutdown of the NCG Collection/Combustion system ends with the shutdown of the last NCG combustion system, the No. 4 Boiler or Lime Kiln.

NCG Collection/Combustion System Pre-Shutdown Checklist
The following conditions must be verified prior to shutdown of the system.

- Shutdown of all evaporator and digester system sources of LVHC vent gases has been planned following the appropriate shutdown procedures?

- Will the fuel, steam, and power necessary to operate the NCG Collection/Combustion system during the shutdown of the digester and evaporator systems be available?

Shutdown Emissions Minimization Checklist

- The destruction of vent gas streams should continue until the generation, collection, and transportation systems have been shutdown or when the temperature measured in the combustion zone falls below the minimum temperature requirement.

- Proceed to shut down all LVHC collection system equipment, such as ejectors, coolers, and scrubbers.

- Divert the NCG vent gas streams to the No. 4 Boiler, if available, or to the atmosphere and purge the firing systems with air or steam prior to shutdown of the Lime Kiln. When shutting the No. 4 NCG burner, also purge the NCG line to the boiler with air or steam prior to shutdown of the Boiler.

NOTE: THE SSM INCIDENT REPORT ON THE FOLLOWING PAGE MUST BE COMPLETED BY THE OPERATOR!

SSM SHUTDOWN INCIDENT REPORT:

WAS THE SSM CHECKLIST FOLLOWED IN NCG SYSTEM SHUTDOWN?* _____

TIME OF FIRST LVHC PROCESS SOURCE SHUTDOWN _____

TIME THE LAST NCG COMBUSTION DEVICE IS SHUTDOWN _____

TIME THAT NCG SYSTEM VENTING DUE TO SHUTDOWN BEGAN: _____

TIME THAT NCG SYSTEM VENTING DUE TO SHUTDOWN ENDED: _____

OPERATOR NAME: _____ *DATE:* _____ *TIME:*_____

**IF THE SSM PLAN WAS NOT FOLLOWED IN SHUTTING THE NCG SYSTEM DOWN, PLEASE EXPLAIN WHAT WAS DONE:* _____

_____

3. NON-CONDENSABLE GAS (NCG) COLLECTION/COMBUSTION SYSTEM MALFUNCTION- EMISSIONS MINIMIZATION CHECKLIST

Below is a description of the various malfunctions and associated operational events for the LVHC NCG Collection and Combustion system with the corresponding emissions minimization information. These malfunctions and events include such issues as safety interlocks, process alarms, and equipment failures. The malfunctions listed are those that would likely cause excess emissions of pulping vent gases.

Event	**Malfunction and Emissions Minimization Steps**	**Operational Effect**(Note 1)
Rupture Disc Failure or Main NCG valve vent	Malfunctions Over Pressurization Emissions minimization steps Isolate the rupture disc and replace as soon as practicable. Investigate the cause of over pressurization and correct any operational problems.	O, B
Loss of Steam Pressure	Malfunctions Low Steam Header Pressure Emissions minimization steps Determine the extent of the loss of steam pressure immediately. If steam pressure can be restored in a timely fashion, then resume normal operations of the LVHC as soon as practicable. If the malfunction will require an extended time to correct, begin to shutdown LVHC sources in a deliberate manner, when practicable.	B, S
Combustion Unit - Flame Failure or Low Temperature or Temperature Monitor Malfunction	Malfunctions Temperature Probe Failure Flame failure Improper air to gas ratio Emissions Minimization Steps Investigate the cause of the low temperature: temperature probe malfunction, flame failure and/or improper air to gas ratios. If repairs cannot be made quickly, divert the NCG and SOG gas streams to the backup NCG combustion unit. If the malfunction can not be corrected in a timely manner and the backup NCG combustion unit is not available for backup combustion, begin to shutdown the NCG vent gas process, collection, and transportation systems, when practicable.	 B S, B B

Event	Malfunction and Emissions Minimization Steps	Operational Effect(Note 1)
Kiln or Combination Boiler - NCG Combustion System failure	Malfunctions Flame Failure Flame Safety System Non-Permissive Emission Minimization Steps ▪ Divert the vent gases to backup (Boiler or Kiln)	S,B
Positive Pressure in Kiln Body	Malfunctions Primary and secondary air fan failure Induced draft fan failure Emissions Minimization Steps Take maintenance action to repair malfunction. If the repair will take a prolonged length of time, divert the gases to the No. 4 Boiler, when practicable.	
Mechanical Component Failure	Malfunctions Pump, Conveyer, or Impeller Failure Kiln Lime Mud Delivery System Failure Kiln Bucket Elevator System Failure Emissions Minimization Steps If the malfunction is at the vent gas source, isolate the problem by venting the source and repairing the source.. If the malfunction is at the Lime Kiln and repairs cannot be made quickly, divert the NCG and SOG gas streams to the No. 4 Boiler. If the malfunction can not be corrected in a timely manner and the backup NCG Combustion unit is not available for backup combustion, begin to shutdown the stripper and vent gas process, collection, and transportation systems, as soon as practicable.	
Electrical Component Failure	Malfunctions Instrument Loop Failure Power Failure Emissions Minimization Steps If the malfunction is at the vent gas source, isolate the problem by venting the source, and then repair. If the malfunction is in the Kiln NCG system, switch the gases to the No. 4 Boiler and evaluate the repairs necessary to correct the malfunction. If the malfunction can not be corrected in a timely manner and the backup NCG Combustion unit is not available for backup combustion, begin to shutdown the stripper and vent gas process, collection, and transportation systems, as soon as practicable	 B, S S

Note 1

"O" indicates that the malfunction or device can be verified and corrected while the source is operational.

"B" indicates the malfunction or device can be verified and corrected while the source is operational, but the malfunctioning device must be bypassed and/or isolated.

"S" indicates that the malfunction cannot be verified or corrected while the system is operational. Such a malfunction will require a temporary shutdown to correct the malfunction. *For malfunctions that require a source to shutdown for repairs or maintenance, the shutdown must be done in a fashion not to create a more significant environmental incident than the temporary venting of pulping gases or sewering of pulping condensate. The mill should document these decisions in the following report.*

NOTE: THE OPERATOR MUST COMPLETE THE SSM INCIDENT REPORT ON THE FOLLOWING PAGE!

NCG SYSTEM - SSM MALFUNCTION INCIDENT REPORT:

WHAT WAS THE NATURE OF MALFUNCTION EVENT? _____

_____

WAS SSM CHECKLIST FOLLOWED FOR NCG SYSTEM MALFUNCTION?* ____

TIME THAT NCG SYSTEM VENTING DUE TO MALFUNCTION BEGAN: _____

*TIME OF NCG SYSTEM MALFUNCTION REPAIR AND END OF VENTING:*_____

WHAT WAS DONE TO CORRECT THE MALFUNCTION? _____

_____

_____

OPERATOR NAME: _____ *DATE* _____ *TIME* _____

**IF THE SSM PLAN WAS NOT FOLLOWED DURING THE MALFUNCTION OF THE NCG SYSTEM, PLEASE EXPLAIN WHAT WAS DONE:* _____

_____

4. NON-CONDENSABLE GAS (NCG) COLLECTION/COMBUSTION SYSTEM DESCRIPTION & NCG SYSTEM FLOW DIAGRAM

EPA defines a *LVHC Collection System* as follows:

"*Low volume, high concentration* or *LVHC (NCG) collection system* means the non-condensable gas collection and transport system used to convey gases from the LVHC system to a control device."

The EPA defines a *LVHC System* as follows:

"*Low volume, high concentration* or *LVHC system* means the collection of equipment including the digester, turpentine recovery, evaporator, steam stripper systems, and any other equipment serving the same function as those previously listed."

The EPA defines a *Closed-Vent System* as follows:

"*Closed-vent system* means a system that is not open to the atmosphere and is composed of piping, ductwork, connections, and, if necessary, flow-inducing devices that transport gas or vapor from an emission point to a control device."

The Panama City Mill NCG *"Closed-vent" Collection System* includes the following process equipment: Gas Coolers, Mist Eliminators, Rupture discs, Steam Ejectors, Flame Arresters, and Flow Control Valves.

The Panama City Mill LVHC *"Closed Vent"* Non-condensable gas (NCG) collection system collects vent gases from the following process equipment: Batch Digester blow heat recovery system, Turpentine Recovery System, Evaporator System (includes Hotwell vents), Foul Condensate Collection Tanks, and the Stripper system.

The LVHC NCG system is "de-coupled" from the process equipment, meaning that the collection system can continue to run even when the process equipment is down. Therefore, upsets that cause the process source equipment to go down do not necessarily cause the LVHC NCG system to vent or go down unless the process upset introduces liquor carryover or significant air infiltration into the vent gas collection system.

For purposes of the SSM plan, the startup, shutdown, and malfunction events are limited to those that affect the LVHC NCG "closed-vent" Collection system and the Combustion of NCG in the No. 4 Boiler or Lime Kiln directly.

The Lime Kiln system may include the following process equipment: Lime Mud Feed System, Induced Draft Fan, Kiln Body, Primary and Secondary Air Fans, Lime Exit Conveyor, and Exit Gas Scrubber. The Lime Kiln NCG combustion system consists of a concentrated NCG burner system and bypass valve and the flame safety system.

The No. 4 Boiler system may include the following process equipment: Induced Draft Fan, Combustion Air Fan, Oxidation Chamber, Bark Feed System, a Traveling grate, and oil burning equipment. The No. 4 Boiler NCG Combustion System consists of a concentrated NCG burner system, a NCG Bypass valve, and the flame safety system.
The Panama City Mill NCG COLLECTION/COMBUSTION system SSM plan is triggered by the following events:

Digesters/Evaporators Operation Definition	Digester Steam Header Flow > 20 klb/h OR Pre-Evaporator Feed Liquor Flow > 500 gpm OR 1A Evaporator Combined Feed Liquor Flow > 200 gpm OR No. 3 Evaporator Combined Feed Liquor flow > 200 gpm
LVHC-NCG Collection and Combustion System Operation Definition	(Both #4 Boiler NCG Burn Valves Open OR Both Lime Kiln NCG Burn Valves Open) AND All NCG Collection Valves are Open (Pre-Evaporator Hotwell, 1A Hotwell, #3 Hotwell, Stripper Feed Tank, Turpentine Condenser, Turpentine Decanter, BHA Secondary Condenser).
Stripper Feed Tank NCG Vent Valve Open Excursion	Stripper Feed Tank NCG Vent Valve Open AND Digesters or Evaporators are in Operation
Blow Heat Secondary Condenser NCG Vent Valve Open Excursion	Blow Heat Secondary Condenser NCG Vent Valve Open AND Digesters or Evaporators are in Operation
Turpentine Condenser NCG Vent Valve Open Excursion	Blow Tank NCG Vent Valve Open AND Digesters or Evaporators are in Operation
Turpentine Decanter NCG Vent Valve Open Excursion	Turpentine Decanter NCG Vent Valve Open AND Digesters or Evaporators are in Operation
LVHC-NCG Collection System Main Vent Valve Open Excursion	Main NCG Vent Valve Open AND Digesters or Evaporators are in Operation
LVHC-NCG Rupture Disk 1 Failure at Lime Kiln Burner Excursion	Kiln Burner NCG Rupture Disk Vent Temperature > 160°F AND Digesters or Evaporators are in Operation
LVHC-NCG Rupture Disk Failure at High Line Excursion	High Line NCG Rupture Disk Vent Temperature > 200°F AND Digesters or Evaporators are in Operation
LVHC-NCG Rupture Disk Failure at No. 4 Bark Boiler Excursion	Temperature Downstream from Rupure Disk > 160°F AND Digesters or Evaporators are in Operation

Panama City Mill Process Flow Diagrams
LVHC Collection and NCG/SOG Transportation System

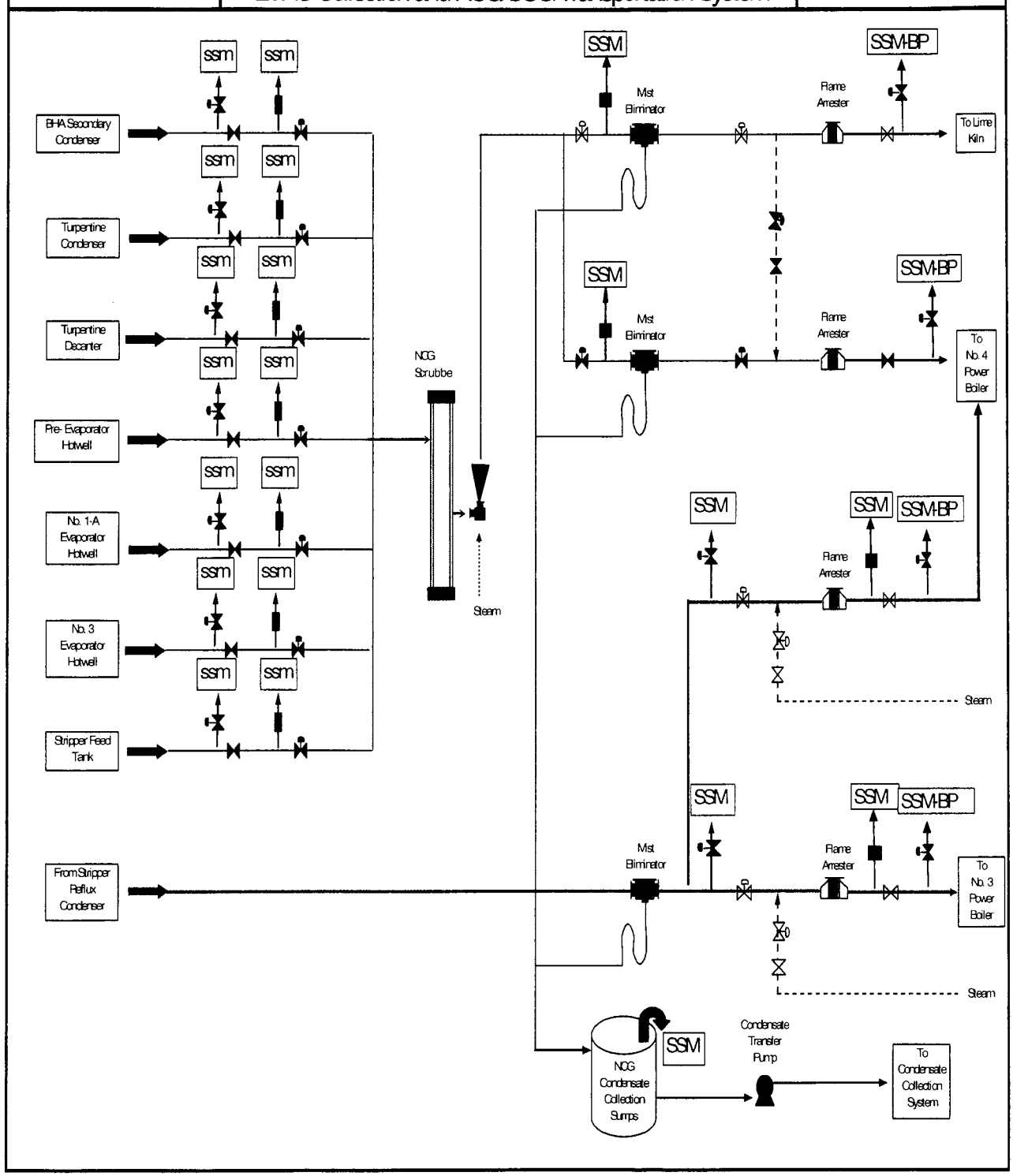

Panama City Mill Process Flow Diagram
#4 Combination Boiler - LVHC-NCG Combustion

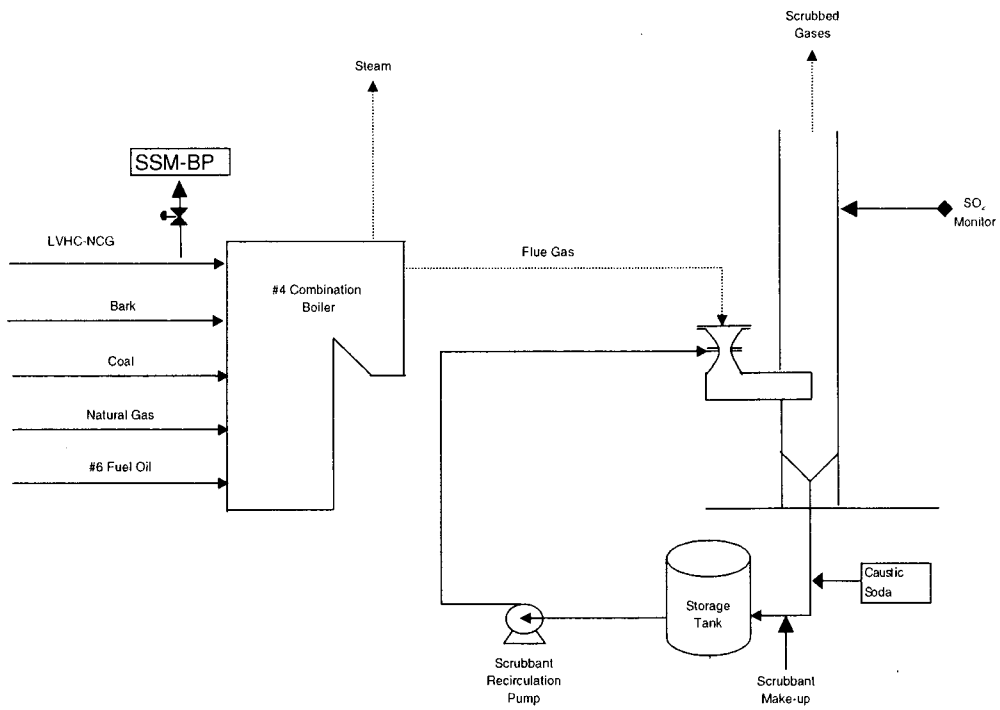

Panama City Mill Process Flow Diagram
Lime Kiln LVHC-NCG Combustion

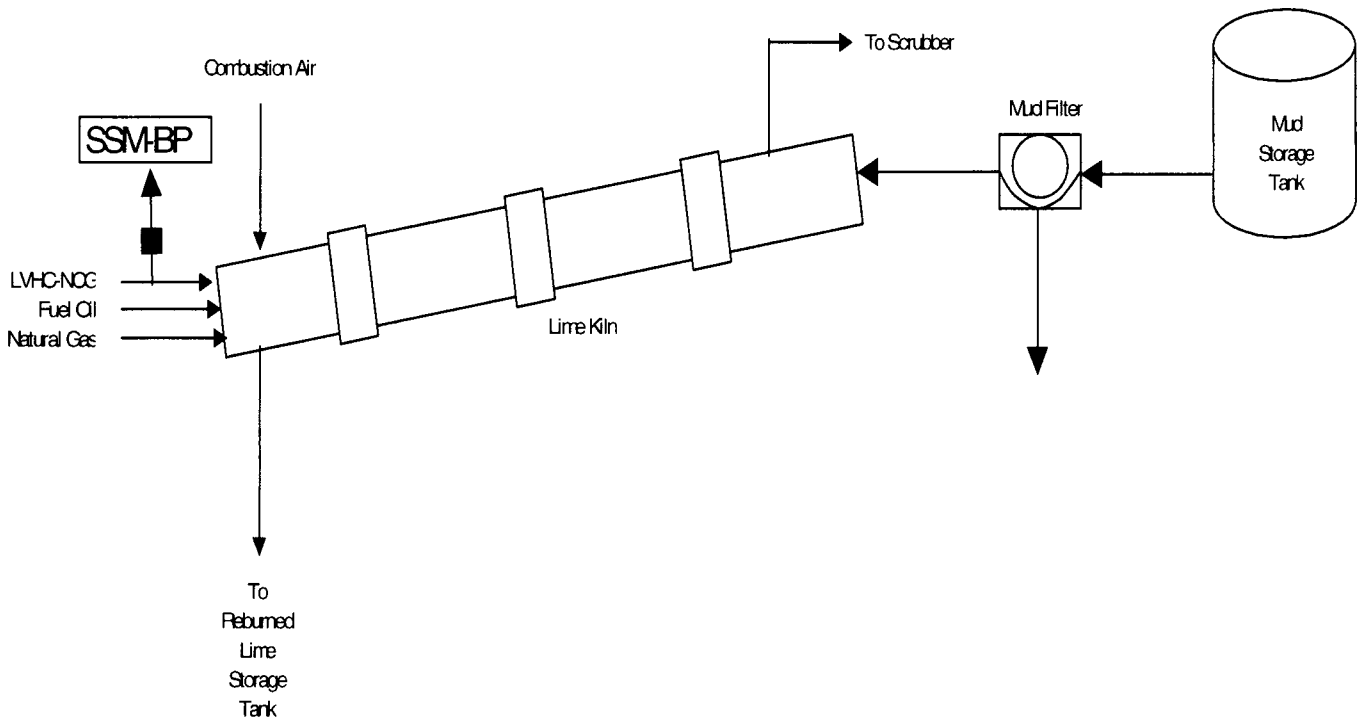

THE SSM PLAN FOR THE
FOUL CONDENSATE COLLECTION SYSTEM
HAS BEEN TRIGGERED!

PLEASE SELECT THE APPROPRIATE SSM PLAN OR INFORMATION:

1. **CONDENSATE COLLECTION SYSTEM START-UP PLAN & REPORT FORMS**
2. **CONDENSATE COLLECTION SHUTDOWN PLAN & REPORT FORMS**
3. **CONDENSATE COLLECTION SYSTEM MALFUNCTION PLAN & REPORT FORMS**
4. **CONDENSATE COLLECTION SYSTEM DESCRIPTION & FLOW DIAGRAM**

1. CONDENSATE COLLECTION SYSTEM STARTUP EMISSIONS MINIMIZATION CHECKLIST

Startup Procedures
Below is the definition of the pulping condensate system startup for normal operations and a checklist for the minimization of emissions during the pulping condensate collection system startup period.

The Condensate collection startup period begins with the startup of the first digester or evaporator system and generation of regulated condensate from that source. The condensate collection system startup ends when all condensate, required for compliance, is collected and sent to the condensate treatment system.

Pre-Startup Checklist
The following conditions must be verified prior to collecting pulping condensate from the required pulping condensate sources.

- ❑ Have the conductivity diversion systems been verified and are set to automatically divert pulping condensates based on liquor contamination?
- ❑ Is there adequate storage volume in the seal pots, condensate storage tanks to allow collection of condensate during the startup period?
- ❑ Is the condensate treatment steam stripping system operating and is there space in the stripper feed tank to accept collected pulping condensate?

Startup Emissions Minimization Checklist

- ❑ Insure that the level controls and conductivity control of pulping condensates are working properly and operational.

- Insure that the condensate collection system flow meters and temperature devices are working properly and the pre-evaporator black liquor bypass monitoring system is working properly.
- Deliver the flow of pulping condensate to the treatment system.

Note: the SSM incident report on the following page must be completed by the operator

CONDENSATE COLLECTION SSM STARTUP INCIDENT REPORT

TIME OF CONDENSATE COLLECTION STARTUP INITIATION: _____

WAS THE SSM CHECKLIST FOLLOWED IN STARTUP OF THE CONDENSATE COLLECTION SYSTEM*? _____

TIME THAT CONDENSATE COLLECTION SYSTEM STARTUP DIVERSION OR OVERFLOW BEGAN: _____

TIME THAT CONDENSATE COLLECTION STARTUP DIVERSION OR OVERFLOW ENDED: _____

TIME OF CONDENSATE COLLECTION STARTUP COMPLETION: _____

OPERATOR NAME: _____ ***DATE:*** _____ ***TIME:*** _____

****IF THE SSM PLAN WAS NOT FOLLOWED IN STARTING THE CONDENSATE COLLECTION SYSTEM, PLEASE EXPLAIN WHAT WAS DONE:***

_____

_____

2.CONDENSATE COLLECTION SYSTEM SHUTDOWN EMISSIONS MINIMIZATION CHECKLIST

Shutdown Procedures
Below is the definition of the transition from normal operations to shutdown and a checklist for the minimization of emissions during the pulping condensate system shutdown period.

The pulping condensate collection system should be operational until all sources generating pulping condensate have been shutdown.
The condensate collection system shutdown period is defined as the time between the shutdown of the first and last process source generating regulated condensate

Pre-Shutdown Checklist
The following conditions must be verified prior to stopping collection of pulping condensates from the digester Blow heat accumulator, turpentine decanter, NCG seal pots, and the Pre-evaporator hotwell.

- ❑ Has the digester system and Pre-evaporator set been shutdown?
- ❑ Are all condensate streams diverted to the sewer?

Shutdown Emissions Minimization Checklist

- ❑ Shutdown all pumps and other pulping condensate collection equipment.

Note: The SSM incident report on the following page must be completed by the operator

CONDENSATE COLLECTION SSM SHUTDOWN INCIDENT REPORT:

WAS THE ABOVE CHECKLIST FOLLOWED IN SHUTDOWN OF THE CONDENSATE COLLECTION SYSTEM?* _____

TIME OF FIRST PROCESS CONDENSATE SOURCE SHUTDOWN: _____

TIME THAT CONDENSATE SYSTEM SHUTDOWN DIVERSION OR OVERFLOW TO SEWER STARTED: _____

TIME THAT CONDENSATE SYSTEM SHUTDOWN DIVERSION OR OVERFLOW TO SEWER ENDED: _____

TIME OF FINAL PROCESS CONDENSATE SOURCE SHUTDOWN: _____

OPERATOR NAME: _____ *DATE*_____ *TIME*_____

**IF THE SSM PLAN WAS NOT FOLLOWED IN SHUTDOWN OF THE CONDENSATE COLLECTION SYSTEM, PLEASE EXPLAIN WHAT WAS DONE:*

_____

_____

3. FOUL CONDENSATE COLLECTION SYSTEM MALFUNCTION EMISSIONS MINIMIZATION CHECKLIST

Below is a description of the various malfunctions and associated operational events for the pulping condensate system with the corresponding emissions minimization information. These malfunctions and events include such issues as safety interlocks, process alarms, and equipment failures. ***Note: diverting pulping condensate to the sewer would only be an excess emission if the duration of the diversion were long enough to reduce the amount of pulping condensate treated to below the standard of methanol per ton required. The mill is still required to monitor and report such diversions.***

Events	**Malfunctions and Emissions Minimization Steps**	**Operational Effect** (Note1)
Condensate Liquor Contamination	Malfunctions Digester Cyclone Failure Excessive Simultaneous Digester Blows High Blow Tank Level Evaporator Liquor Carryover Emissions Minimization Steps Identify the nature and extent of the liquor contamination. Divert the individual condensate to the sewer until conductivity is within acceptable range. Restore collection and treatment of this condensate as soon as practicable.	 S O B O

Events	Malfunctions and Emissions Minimization Steps	Operational Effect (Note1)
Condensate Turpentine Contamination	Malfunctions Condenser failure Condenser bypass Emissions Minimization Steps In the event that this occurs, divert the minimum amount of turpentine condensate to the sewer. Restore collection and treatment of this condensate as soon as practicable.	 S B, S
Condensate Treatment System Malfunction	Malfunctions Stripper Malfunction SOG Collection System Malfunction No. 3 Boiler SOG burner Malfunction No. 4 Boiler SOG burner Malfunction Emissions Minimization Steps The stripper should be bottled-up or shutdown immediately, unless the boiler experiences the failure and the SOG can be swapped to the other boiler. While the stripper is bottled-up, continue to collect condensate and determine the cause of the Condensate treatment system malfunction. Evaluate the repairs necessary to correct the malfunction. If the malfunction can not be corrected in timely manner, begin to shutdown the stripper and SOG combustion process, as soon as practicable	 B, S B, S B, S

Events	Malfunctions and Emissions Minimization Steps	Operational Effect (Note1)
Monitor Failure	Malfunctions	
	BHA Condensate to Flash tank flow	O
	BHA Condensate to Flash tank temperature	O
	BHA Condensate from Flash tank flow	O
	Flash Steam temperature	O
	Pre-evaporator Black Liquor bypass valve	O
	Pre-evaporator Black Liquor bypass flow	O
	Turpentine Decanter condensate flow	O
	Pre-evaporator condensate flow	O
	BHA Overflow flow	O
	Instrument Loop Failure	B, S
	Emissions Minimization Steps	
	Determine the cause of the monitor malfunction and repair as soon as possible. Keep the decanter underflow going to the accumulator and divert the underflow to the sewer only as a last resort. Restore collection and treatment of this condensate as soon as practicable.	
Mechanical Failure	Malfunctions	
	Pump Failure	B, S
	Valve Failure	B, S
	Emissions Minimization Steps	
	Determine the cause of the mechanical failure and repair as soon as possible. Keep the decanter underflow going to the accumulator and divert the underflow to the sewer only as a last resort. Restore collection and treatment of this condensate as soon as practicable.	

Events	Malfunctions and Emissions Minimization Steps	Operational Effect (Note1)
Electrical Failure	Malfunctions Power Outage Motor Failure Emissions Minimization Steps Determine the cause of the electrical failure and repair as soon as possible. Keep the decanter underflow going to the accumulator and divert the underflow to the sewer only as a last resort. Restore collection and treatment of this condensate as soon as practicable.	 S B, S

Note 1:

"O" indicates that the malfunction or device can be verified and corrected while the source is operational.

"B" indicates the malfunction or device can be verified and corrected while the source is operational, but the malfunctioning device must be bypassed and/or isolated.

"S" indicates that the malfunction cannot be verified or corrected while the system is operational. Such a malfunction will require a temporary shutdown to correct the malfunction.

FOUL CONDENSATE COLLECTION SYSTEM - SSM MALFUNCTION INCIDENT REPORT:

WHAT WAS THE NATURE OF MALFUNCTION EVENT? _____

_____

WAS SSM CHECKLIST FOLLOWED FOR SYSTEM MALFUNCTION?* _____

TIME CONDENSATE DIVERSION TO THE SEWER BEGAN: _____

TIME CONDENSATE DIVERSION TO THE SEWER ENDED: _____

WHAT WAS DONE TO CORRECT THE MALFUNCTION? _____

_____

OPERATOR NAME: _____ *DATE:*_____ *TIME:*_____

**IF THE SSM PLAN WAS NOT FOLLOWED DURING THE MALFUNCTION OF THE CONDENSATE COLLECTION SYSTEM, PLEASE EXPLAIN WHAT WAS DONE:*

_____

_____

4. FOUL CONDENSATE COLLECTION SYSTEM DESCRIPTION & SYSTEM FLOW DIAGRAM

The EPA defines a ***Pulping System*** as follows:

"*Pulping system* means all process equipment, beginning with the digester system, and up to and including the last piece of pulp conditioning equipment prior to the bleaching system, including treatment with ozone, oxygen, or peroxide before the first application of a chemical bleaching agent intended to brighten pulp. The pulping system includes pulping process condensate and can include multiple pulping lines."

The EPA defines a ***Pulping Process Condensate*** as follows:

"*Pulping process condensate* means any HAP-containing liquid that results from contact of water with organic compounds in the pulping process. Examples of process condensate include digester system condensate, turpentine recovery system condensate, evaporator system condensate, LVHC system condensate, and any other condensate from equipment serving the same functions as those previously listed. Liquid streams that are intended for byproduct recovery are not considered process condensate streams."

The Panama City Mill Pulping Condensate collection system includes the following process equipment: Pulping Process Condensate Seal Pots, Storage Tank(s), Pumps, Conductivity Meters, and Diverting or Flow Control Valves. For demonstration of compliance with the condensate collection requirements, a condensate flow meter. All the regulated condensate streams are piped to a condensate stripper feed tank. All foul condensate tanks are vented to the LVHC gas collection system.

The Panama City "Foul" Pulping Condensate collection system that is used for compliance with the requirements of 63.446(c)(3) includes collection of the condensate from the combined digester system (includes the Blow Heat Accumulator and the turpentine system) and the NCG system condensate. Additionally, condensates from a Pre-Evaporator system are collected for treatment to meet the requirements of 63.447, the Clean Condensate Alternative.

The "Clean Condensate Alternative" project resulted in separation of the LVHC non-condensable gas system (LVHC-NCG) and turpentine recovery

system condensate from the Blow Heat Accumulator and use of the hot condensate from the Blow Heat Accumulator primary condensate in a flash tank as the source of steam for the new pre-evaporator set. The digester system, turpentine system and LVHC-NCG system condensate streams continue to be collected.

For the analysis of the condensate streams collected, samples that are composited from six samples (two per 8 hour shift) collected daily for 15 days are analyzed. Daily composite samples of the stripper feed condensate stream are analyzed to determine a 15 day average concentration of methanol, in lbs. methanol /ODTP. Compliance is then determined by the sum of the methanol mass from the decanter underflow, the blow heat accumulator overflow stream (if present) and the pre-evaporator flash steam, and compared with the target collection value of 14.5 lb/ODTP.

For initial compliance demonstration the concentration of methanol in mg/l and total daily flow will be determined for the total condensate streams (represented by the stripper feed flow) composite sample during the 15-day performance tests. The daily pulp production, the stripper feed flow daily flow, and the methanol concentration would be used to calculate a lbs. methanol/ODTP. The 15 day average of the daily lbs. methanol /ODTP would be used then to determine compliance with the requirements of §63.446(c)(3) and the additional 2.2 lbs. methanol/ODTP collected for treatment as required by §63.447

For continuous compliance monitoring, the average concentration of methanol in mg/l in the stripper feed flow during the performance tests with the daily stripper feed flow and pulp production would be used to calculate a daily lbs. methanol/ODTP for the combined condensate streams. This will be compared with the target of 14.5 lb/ODTP (historical collection rate of 12.3 lb/ODTP, plus 2.2 lb/ODTP for the CCA project). A 15 day rolling average of the daily lbs. methanol /ODTP for the combined condensate streams and the calculations above would be used then to calculate compliance with the requirements, as we are currently doing.

The Condensate Collection System SSM Plan is triggered by:

Accumulator Overflow Methanol Condensate Collection Definition	Discrete 24-hour total of [BHA Overflow to Stripper Feed Tank Flow (gal) X Manual Tag for Methanol in BHA Overflow Condensate (ppm) X 8.34 lb/gal] ÷ Daily Pulp Production (tons)
Digester Condensate Flash Steam Methanol Collection Definition	Discrete 24-hour total of [[BHA to Pre-Evap Flash Tank (gal) X Manual Tag for Methanol in BHA to Flash Tank (ppm) X 8.34 lb/gal] - [BHA to FT (gal) - [BHA to FT (gal) X [Temp. to FT (°F) - Temp. to BHA (°F)] ÷ 1000]] X Manual Tag for Methanol in FT to BHA (ppm) X 8.34 lb/gal] ÷ Daily Pulp Production (tons)
Turpentine Decanter Methanol Condensate Collection Definition	Discrete 24-hour total of [Turpentine Decanter Underflow (gal) * Manual Tag for Methanol in BHA Condensate * 8.34 lb/gal] / Daily Pulp Production (tons)
§63.446(c)(3) Methanol Collection Definition	Collection of: Accumulator Overflow + Digester Condensate + Turpentine Decanter Condensate (lb MeOH/ton pulp)
§63.446(c)(3) Methanol Collection Requirement Definition	Discrete 24-hour average of [(Primary + Secondary Pulp Tons) * 7.2 lb methanol/ton + EBK Pulp Tons * 11.1 lb methanol/ton] / Daily Pulp Production (tons)
§63.446(c)(3) Methanol Collection SSM Excursion	Discrete 24-hour §63.446(c)(3) Methanol Collected < §63.446(c)(3) Methanol Collection Requirement
§63.447 Methanol Collection Definition	Discrete 24-hour total of [Pre-Evaporator Foul Condensate to Stripper Feed Tank Flow (gal) * Manual Tag for Methanol in Pre-Evaporator Foul Condensate * 8.34 lb/gal] / Daily Pulp Production (tons) minus Digester Condensate Methanol Collection
§63.447 Methanol Collection SSM Excursion	Discrete 24-hour §63.447 Methanol Collected < 2.2 lb MeOH/ton pulp
Turpentine Decanter Flow Meter Malfunction	"Bad Value" or "Flat-line" for Turpentine Decanter Condensate to Stripper Feed Flow Meter AND Digester system operational
Blow Heat Accumulator Condensate Overflow Meter Malfunction	"Bad Value" or "Flat-line" for BHA Condensate to Stripper Feed Flow Meter AND Digester system operational
Pre-evaporator Hotwell Flow Meter Malfunction	"Bad Value" or "Flat-line" for BHA Condensate to Stripper Feed Flow Meter AND Pre-evaporator system operational
Pre-evaporator Black Liquor Bypass Flow Meter Malfunction	"Bad Value" or "Flat-line" for Pre-Evaporator Bypass Black Liquor Flow Meter AND Pre-evaporator system operational
Pre-Evaporator Black Liquor Bypass	Pre-Evaporator Black Liquor Bypass Valve Open and Bypassed Liquor flow > 1000 gpm for 1-hour average

CONDENSATE COLLECTION SYSTEM FLOW DIAGRAM

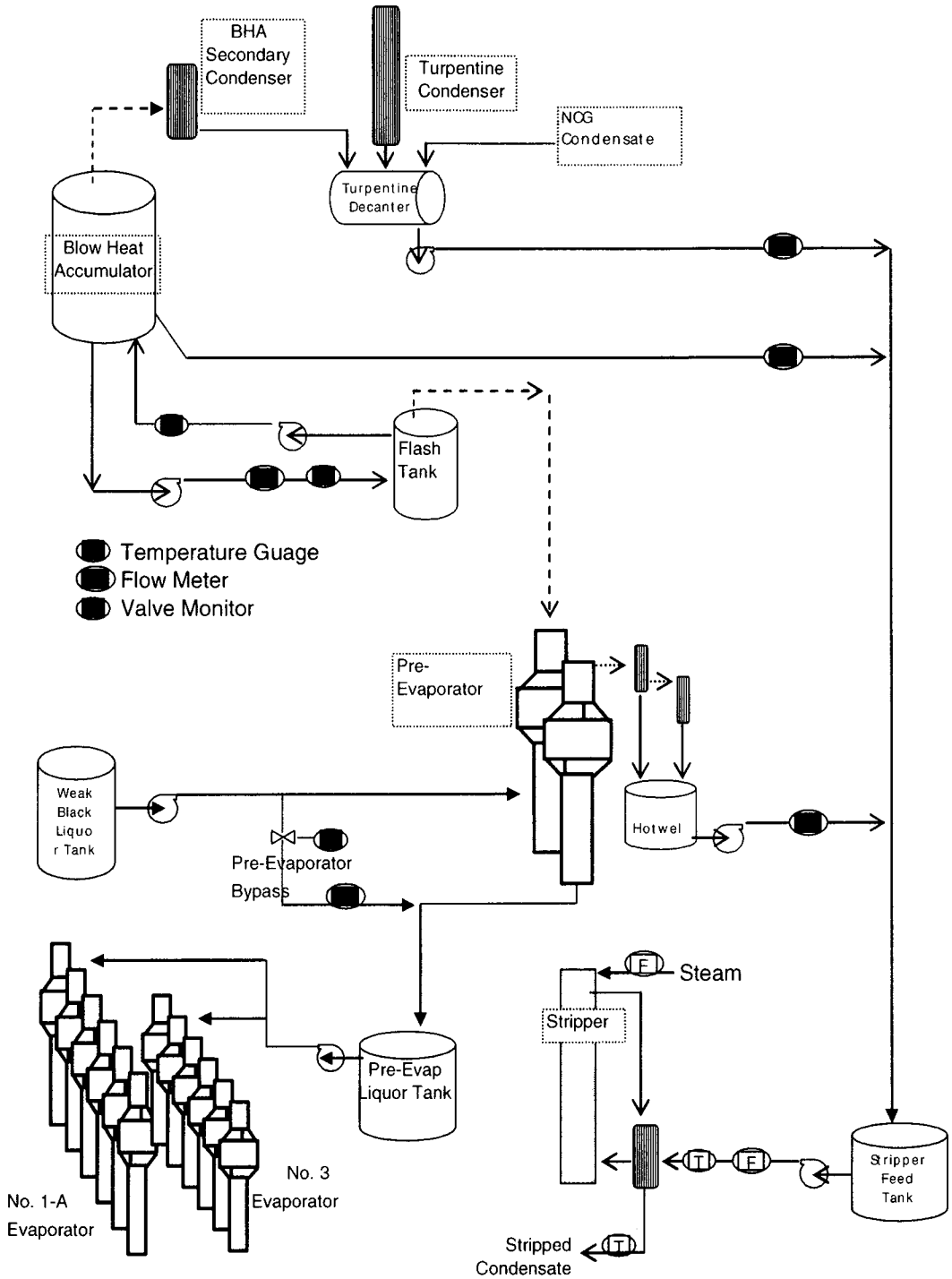

Pulping Process Condensate Flow Diagram

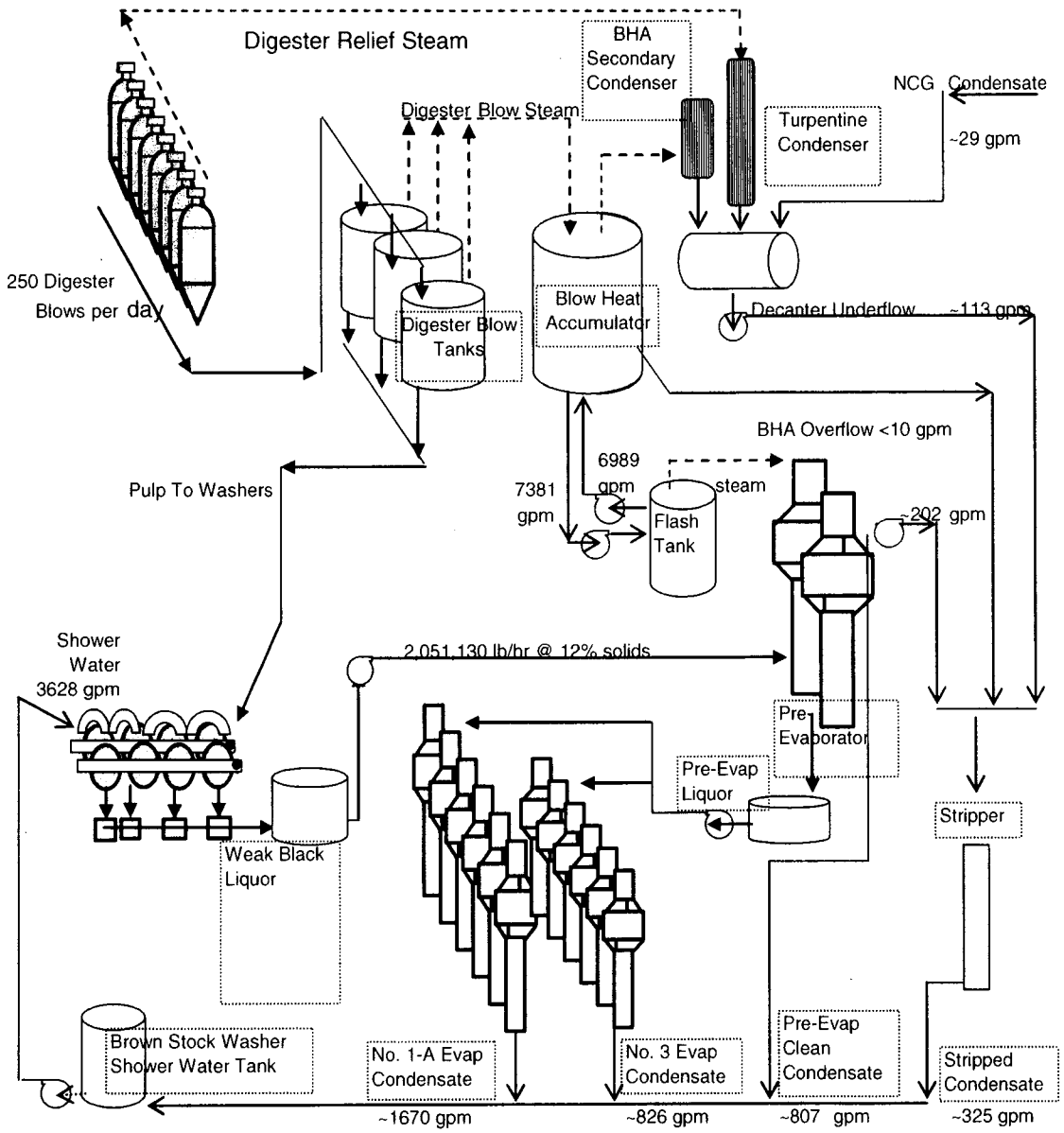

Panama City Mill Process Flow Diagram
Batch Digester System

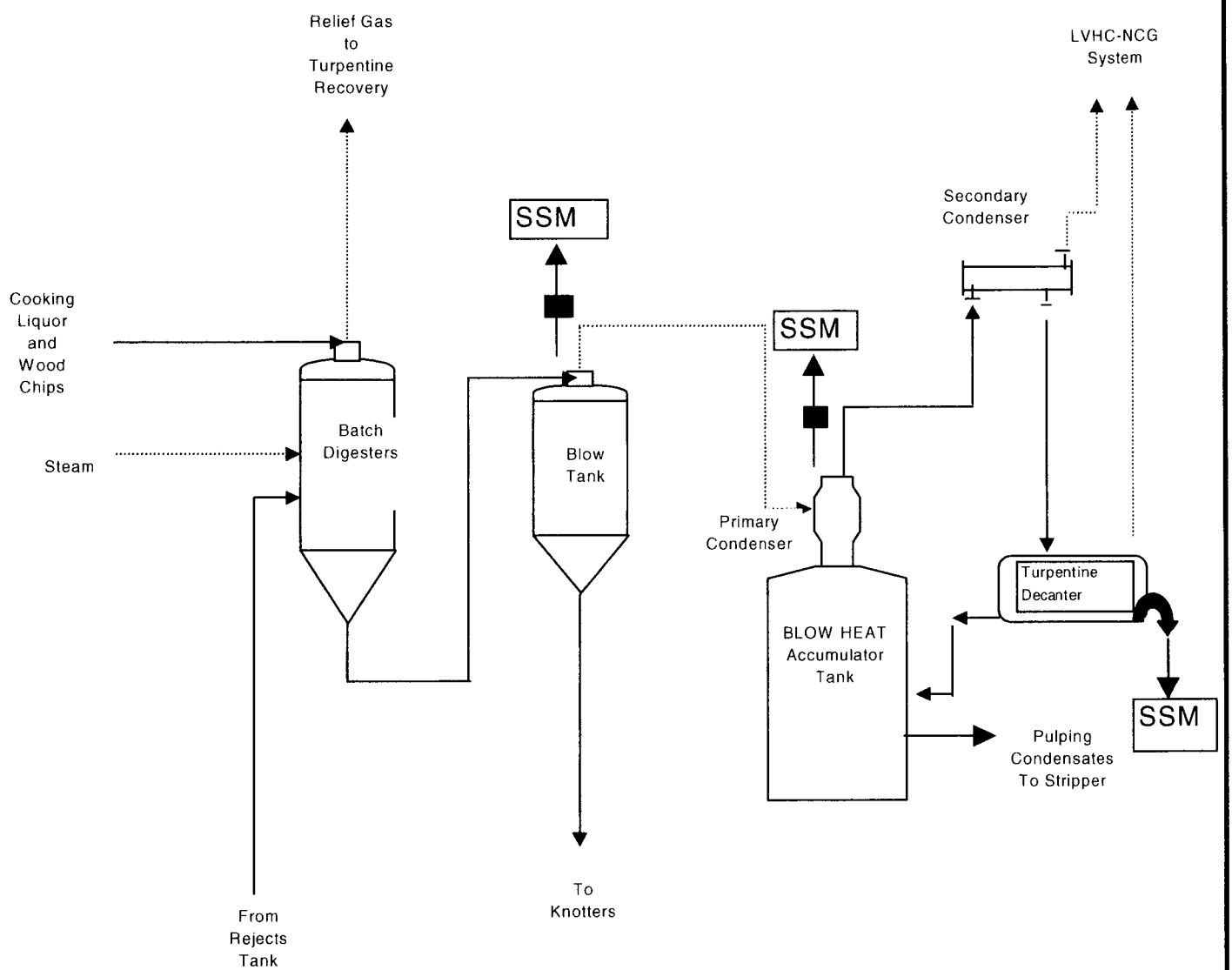

THE SSM PLAN FOR THE FOUL CONDENSATE TREATMENT SYSTEM (CONDENSATE STRIPPER AND NO. 3 or 4 BOILER SOG BURNER) HAS BEEN TRIGGERED!

PLEASE SELECT THE APPROPRIATE SSM PLAN OR INFORMATION:

1. CONDENSATE TREATMENT SYSTEM START-UP PLAN & REPORT FORMS

2. CONDENSATE TREATMENT SYSTEM SHUTDOWN PLAN & REPORT FORMS

3. CONDENSATE TREATMENT SYSTEM MALFUNCTION PLAN & REPORT FORMS

4. CONDENSATE TREATMENT SYSTEM DESCRIPTION & FLOW DIAGRAM

1.CONDENSATE TREATMENT (STRIPPER) SYSTEM STARTUP EMISSIONS MINIMIZATION CHECKLIST

Below is the definition of the system startup and a checklist for the minimization of emissions during the condensate stripping and SOG combustion system startup period. This startup checklist does not include any guidance regarding the startup of digester or evaporator systems that generate this condensate.

The stripper and SOG combustion unit should be operational prior to introduction of condensate to the stripper. The period of time defining the startup of the condensate stripping and combustion system is as follows: the startup of the Condensate Treatment system begins with the startup (introduction of water or condensate) to the stripper. The startup of the condensate stripping and combustion system ends with a stable level in the stripper feed tank, compliant stripping of the condensate, and combustion of the full stripper overhead gas (SOG) stream in the No. 3 or No. 4 Power Boiler.

Pre-Startup Checklist

The following conditions should be verified prior to introducing pulping condensate to the stripper and SOG combustion unit.

- ❑ Have the conductivity diversion systems been verify and are set to automatically divert pulping condensate based on liquor or turpentine contamination?
- ❑ Is there adequate storage volume in the seal pots or condensate storage tanks or stripper feed tank to allow collection of condensate during the startup period?
- ❑ Is the Stripper system running and operating within the liquid to effective steam ratio required for methanol removal?
- ❑ Are all stripper process temperatures, pressures and flows at normal operating conditions?
- ❑ Is the SOG combustion unit operating and in "READY" mode to accept stripper gases, have the flame safety permissives been met, and is air or steam flowing to the SOG injection nozzle?
- ❑ Is the stripper monitoring system calibrated and operational?

Startup Emissions Minimization Checklist

- ❑ The boiler selected should be allowed to reach a normal operating state before switching the stripper vent gases over.
- ❑ Insure that the level controls and conductivity control of pulping condensate systems are working properly and operational.
- ❑ Introduce the flow of pulping condensate to the stripper and add the SOG gas stream to the selected boiler SOG burner system.

Note: The SSM incident report on the following page must be completed by the operator

CONDENSATE TREATMENT SYSTEM SSM STARTUP INCIDENT REPORT:

WAS THE SSM PLAN CHECKLIST FOLLOWED IN STARTUP OF THE CONDENSATE STRIPPING AND COMBUSTION SYSTEM?* _____

TIME THAT CONDENSATE SYSTEM STARTUP BEGAN: _____

TIME THAT STRIPPER FEED TANK SPILLED OR DIVERSION TO SEWER BEGAN: _____

TIME THAT STRIPPER FEED TANK SPILL OR DIVERSION TO SEWER STOPPED: _____

TIME THAT STRIPPER OVERHEAD GAS VENTING BEGAN: _____

TIME THAT STRIPPER OVERHEAD GAS VENTING ENDED: _____

TIME THAT CONDENSATE SYSTEM STARTUP ENDED, STRIPPER OPERATING NORMALLY AND SOG BURNING: _____

OPERATOR NAME: _____ *DATE:* _____ *TIME:* _____

**IF THE SSM PLAN WAS NOT FOLLOWED IN STARTING THE CONDENSATE STRIPPING AND SOG COMBUSTION SYSTEM, PLEASE EXPLAIN WHAT WAS DONE:*

_____

_____

2.CONDENSATE TREATMENT (STRIPPER) SYSTEM SHUTDOWN - EMISSIONS MINIMIZATION CHECKLIST

Below is the Condensate Treatment System checklist for the minimization of emissions during the system shutdown period of the system. There is no requirement to cease generating condensate and stop process source operation unless the condensate collection or treatment standard of methanol per ton of pulp is in question. From time to time the Stripper and SOG system must be shutdown for preventive or regular maintenance while continuing to operate pulping and evaporator processes. This maintenance downtime is specifically allowed for in the Cluster Rule but limited, in that the condensate must be successfully treated more than 90% of the time on a six-month basis. ***Furthermore, diverting pulping condensate to the sewer would only be an excess emission if the duration of the diversion were long enough to reduce the amount of pulping condensate collected to below the standard of methanol per ton required. The mill is still required to monitor and report such diversions and the pulping condensate collection system should be operational unless all sources generating pulping condensate have been shutdown.***

Pre-Shutdown Checklist

- The following conditions should be verified prior to suspending treatment of the pulping condensate from the pulping condensate collection system.
- Are all condensate streams still being collected?
- Has a short-term or long-term condensate treatment system plan been decided?
- If the shutdown period will be short, then bottle-up the stripper by stopping the stripper feed condensate and steam.

Shutdown Emissions Minimization Checklist

- The destruction of SOG should continue until the stripper and SOG transportation systems have been shutdown or when the temperature measured in the combustion zone of the SOG combustion unit falls below the minimum temperature requirement.
- Proceed to shut down the stripper.
- Maintain SOG flow to the No. 3 or No. 4 Boiler for as long as possible before switching to the safety vent, during the Stripper shutdown period.
- When shutting the SOG combustion system down, purge the SOG firing systems with steam prior to shutdown.
- Shutdown all SOG collection system equipment, such as steam ejectors and coolers, and purge the SOG collection system with steam.

Note: The SSM incident report on the following page must be completed by the operator

CONDENSATE TREATMENT SYSTEM SSM SHUTDOWN INCIDENT REPORT:

WAS THE ABOVE CHECKLIST FOLLOWED IN SHUTDOWN OF THE CONDENSATE STRIPPING SYSTEM?* ____

*TIME THAT CONDENSATE TREATMENT SYSTEM SHUTDOWN BEGAN:*_____

TIME THAT STRIPPING SYSTEM STRIPPER FEED TANK SPILL OR DIVERSION TO SEWER BEGAN: _____

TIME THAT STRIPPING SYSTEM STRIPPER FEED TANK SPILL OR DIVERSION TO SEWER STOPPED: _____

TIME THAT STRIPPER OVERHEAD GAS VENTING BEGAN: _____

TIME THAT STRIPPER OVERHEAD GAS VENTING ENDED: _____

*TIME THAT CONDENSATE TREATMENT SYSTEM SHUTDOWN ENDED:*_____

OPERATOR NAME: _____ *DATE:*_____ *TIME:*_____

**IF THE SSM PLAN WAS NOT FOLLOWED IN SHUTDOWN OF THE CONDENSATE STRIPPER SYSTEM, PLEASE EXPLAIN WHAT WAS DONE:*

_____

_____

3.CONDENSATE TREATMENT SYSTEM MALFUNCTION - EMISSIONS MINIMIZATION CHECKLIST

Below is a description of the various malfunctions and associated operational events for the condensate stripping system with the corresponding emissions minimization information. These malfunctions and events include such issues as safety interlocks, process alarms, and equipment failures. The malfunctions listed are those that would likely cause excess emissions of either pulping vent gases or pulping condensate. During malfunctions that would result in stripper shutdown, the pulping condensate should continue to be collected during the stripper outage. Once, condensate collection storage is exhausted, the mill should consider shutdown of sources generating pulping condensate or diversion of individual condensate streams that would minimize emissions, as practicable, in compliance with condensate collection and treatment requirements.

Event	Malfunctions and Emissions Minimization Steps	Operational Effect**
Rupture Disc Failure Or SOG vent	Malfunctions Over Pressurization Emissions minimization steps Bottle-up the Stripper, isolate the rupture disc and replace as soon as practicable. Investigate the cause of over pressurization and correct any operational problems.	O, B
Loss of Steam Pressure or Stripper Steam to Condensate ratio monitor exceedance	Malfunctions Low Steam Header Pressure Steam Hammering Stripper "Effective" Steam less than set point Emissions Minimization Steps Determine the extent of the loss of steam pressure immediately. If the steam pressure can be restored in a timely fashion, reduce condensate flow to the "effective" Steam to Condensate ratio and then resume normal operations of the stripper system as soon as normal steam flow returns. If the malfunction will require an extended time to correct, begin to shutdown the Stripper and SOG systems in a deliberate manner, as soon as practicable.	B, S

Description of Malfunctions (continued)

Event	Malfunctions and Emissions Minimization Steps	Operational Effect**
Stripper Monitoring Instrument Failure	Malfunctions Stripper feed condensate temperature probe failure Stripped condensate temperature probe failure Steam Flow meter malfunction Condensate Flow meter malfunction Emissions Minimization Steps If the probe or meter can be restored in a timely fashion, reduce condensate flow to the best estimate of the "effective" Steam/Condensate ratio and then resume normal operations of the stripper system as soon as the instrument is repaired. If the malfunction will require an extended time to correct, begin to shutdown the Stripper and SOG systems in a deliberate manner, when practicable.	
Process Malfunction	Malfunctions Condensate Contamination (Fiber, Liquor, Turpentine) Emissions Minimization Steps As soon as it is known that the condensate in the stripper feed tank is contaminated, the stripper should be shut down immediately. The condensate flow from the source of the contamination should be stopped and the condensate collection line from that source purged Empty the stripper feed tank. Restart the stripper as soon as clean condensate can be again collected.	S
Combustion Unit - Flame Failure or Low Temperature or Temperature Monitor Malfunction	Malfunctions Temperature Probe Failure Flame failure Improper air to gas ratio Emissions Minimization Steps Investigate the cause of the low temperature: temperature probe malfunction, flame failure and/or improper air to gas ratios. If repairs cannot be made quickly, begin to shutdown the stripper and SOG collection and transportation system as soon as practicable.	B S, B B
No. 3 or No.4 Boiler Scrubber Malfunction	Malfunctions Caustic/water supply or recirculation pump failure Liquid level controller failure Emissions Minimization Steps Continue to scrub the vent gases to the extent possible during malfunction (this may include manual adjustment of pH or scrubbant liquid).	O,S

Description of Malfunctions (continued)

Event	Malfunctions and Emissions Minimization Steps	Operational Effect**
Mechanical Component Failure	Malfunctions Pump, Conveyer, or Impeller Failure Heat Exchanger Pluggage Other mechanical failures Emissions Minimization Steps If the malfunction is at the stripper, shutdown and repair the stripper. If the malfunction is at the selected boiler or SOG burner, transfer SOG to the other boiler as soon as practicable.	
Electrical Component Failure	Malfunctions Instrument Loop Failure Power Failure Emissions Minimization Steps If the malfunction is at the stripper, shutdown and repair the stripper. If the malfunction is at the selected boiler or SOG burner, transfer SOG to the other boiler as soon as practicable.	 B, S S

Note 1

"**O**" indicates that the malfunction or device can be verified and corrected while the source is operational.

"**B**" indicates the malfunction or device can be verified and corrected while the source is operational, but the malfunctioning device must be bypassed and/or isolated.

"**S**" indicates that the malfunction cannot be verified or corrected while the system is operational. Such a malfunction will require a temporary shutdown to correct the malfunction.

Note: The SSM incident report on the following page must be completed by the operator

CONDENSATE TREATMENT SYSTEM - SSM MALFUNCTION INCIDENT REPORT:

WHAT WAS THE NATURE OF MALFUNCTION EVENT? _____

_____

WAS SSM CHECKLIST FOLLOWED FOR SYSTEM MALFUNCTION?* _____

TIME OF STRIPPER MONITORING SYSTEM MALFUNCTION OR STRIPPER FEED TANK DIVERSION TO SEWER: _____

TIME THAT STRIPPER MONITORING SYSTEM FIXED OR STRIPPER FEED TANK SPILL OR DIVERSION TO SEWER STOPPED: _____

TIME THAT STRIPPER OVERHEAD GAS VENTING BEGAN: _____

TIME THAT STRIPPER OVERHEAD GAS VENTING ENDED: _____

WHAT WAS DONE TO CORRECT THE MALFUNCTION? _____

_____

_____

OPERATOR NAME: _____ *DATE:* _____ *TIME:*_____

**IF THE SSM PLAN WAS NOT FOLLOWED DURING THE MALFUNCTION OF THE CONDENSATE STRIPPING SYSTEM, PLEASE EXPLAIN WHAT WAS DONE:*

_____

_____

4.CONDENSATE TREATMENT SYSTEM DESCRIPTION & *SYSTEM FLOW DIAGRAM*

The EPA defines a ***Steam Stripper System*** as follows:
"*Steam stripper system* means a column (including associated stripper feed tanks, condensers, or heat exchangers) used to remove compounds from wastewater or condensate using steam. The steam stripper system also contains all equipment associated with a methanol rectification process including rectifiers, condensers, decanters, storage tanks, and any other equipment serving the same function as those previously listed."

The Stripper system processes the foul condensate by use of indirect heating or direct steam injection to volatilize methanol and other hazardous air pollutants (HAPS). The Stripper off-gas (SOG), rich in methanol, is then sent on to the No. 3 Boiler or No. 4 Boiler SOG burners for HAPS destruction.

For purposes of the SSM plan, the startup, shutdown, and malfunction events are limited to those that affect the stripper, the SOG "closed-vent" Collection system and the combustion of NCG in the No. 3 or No. 4 Boiler, directly.

The No. 3 Boiler system includes the following process equipment: Induced Draft Fan, Combustion Air Fan, Oxidation Chamber, Bark burning stoker and traveling grate system, and natural gas and fuel oil burning equipment. The No. 3 Boiler SOG Combustion System consists of an SOG burner system, a SOG Bypass valve, and the boiler flame safety system.

The No. 4 Boiler system includes the following process equipment: Induced Draft Fan, Combustion Air Fan, Oxidation Chamber, Bark bruning stoker and traveling grate system, pulverized Coal burners system, and natural gas and fuel oil burning equipment. The No. 4 Boiler SOG Combustion System consists of an SOG burner system, a SOG Bypass valve, and the boiler flame safety system.

63.446(e)(4) & (5): Condensate Treatment Compliance Demonstration

The condensate steam stripper methanol removal efficiency to prove compliance with 63.446(e)(4) & (5) is determined using a test that is

conducted simultaneously with the 15 day condensate collection performance test. Methanol concentrations in and out of the stripper are determined from daily composite samples composed of six samples per day (2 per shift) of stripper feed condensate. The flow of condensate to the stripper is measured and the lbs. of methanol removed by the stripper is calculated on a daily basis. This is compared to the condensate methanol removal requirement of 14.5 lb/ODTP. This value was attained by taking the historical average collection and adding the amount of methanol that had been discharged from the evaporator cooling tower (1.8 lb/ODTP), corrected to account for the required stripper uptime (90%) and required stripper removal efficiency (92%).

The stripper is required to be operating at greater than the required stripping efficiency (currently 68%) for greater than 90% of the operating time of the sources (digester and turpentine systems) that are generating the condensate. Stripper uptime is defined as the time that the stripper monitoring system is operating and the stripper feed tank is NOT overflowing. Condensate stripper Startup, Shutdown, and Malfunction events are controlled using the SSM plan and the SSM times are counted as stripper downtime if the digester or turpentine systems are operating.

A continuous monitoring system meeting the requirements of §63.453(g) is operated to measured the stripper condensate feed rate, the steam feed rate and the process wastewater column feed temperature. During the condensate collection and stripper efficiency performance test period, additional testing is performed to develop curves to compare the methanol removal efficiency with the ratio of stripper steam usage to the amount of condensate stripped. The Effective Steam Ratio (ERS) Vs % methanol removal curve is generated from the stripper feed methanol and the stripped condensate methanol for a given steam ratio. The steam ratio is varied during the test to incorporate the expected steam ratio ranges used during operation.

The ratio of percent methanol removal compared to the Effective Steam Ratio (ESR) that was determined during the performance testing is used to confirm continuous compliance with §63.446(e) (4) & (5). ESR is continuously monitored and used to calculate the amount of methanol removed by the stripper on a daily basis for comparison with the removal requirement.

Stripper Overhead Gas (SOG) is currently thermally oxidized in the #3 or #4 Bark Boilers. The SOG bypass valve is monitored as part of the mill's LVHC collection system, where the SOG must be collected at least 99% of the time and destroyed in a combustion device capable of 98% thermal destruction.

The steam flow, stripper bottom temperature, condensate feed temperatures and the flow of inlet condensate to the stripper are used to determine the "effective steam ratio" (ESR). To determine the ESR at the required methanol removal efficiency, stripper methanol removal tests are conducted at several effective steam ratio's between 12 and 21 %. At least two sets of stripper efficiency samples are analyzed for each ERS %, and the required methanol removal efficiency on this curve is developed from this information by the least squares regression equation.. The calculations for "effective steam" are below:

Effective steam = feed steam – condensate feed x (T1-T2)/1000
Effective steam ratio = effective steam / condensate feed
T1= stripper bottom temperature T2 = condensate feed temperature

63.447 "Clean Condensate" Treatment Compliance Demonstration

As indicated in our February 16, 2004, letter to Mr. Bruce Mitchell, the result of the performance testing will also prove that the methanol in the condensate currently going to and being emitted from the barometric condenser cooling tower (1.8 lbs. of methanol from evaporator condensate per ODTP) is destroyed. The proposed compliance demonstration will again include evaluation of the stripper efficiency and prove the additional treatment of at least 1.8 lbs. of methanol per ODTP. The performance test results will then prove that this additional condensate methanol collected from the evaporator system will not be available for additional emissions from anywhere – especially from the washer system where this condensate will ultimately be used. So, as a result of the CCA plan, the volume of condensate that was evaporated from the barometric condenser cooling tower is now available for use in pulp washing without any increase in the concentration of HAP in the condensate going to or HAP emissions from the pulp washing system.

The Cluster Rule requires that a minimum of 92% of the hazardous air pollutant, Methanol, must be removed by the stripper more than 90% of the

time on a semi-annual basis. Compliance with the 92% methanol removal requirements must be continuously monitored. Stripper steam flow, stripper feed condensate temperature, stripped condensate temperature, and stripper condensate flow must be continuously monitored. The stripper SSM malfunction plan is triggered if any of the stripper monitoring systems fail.

The foul Condensate Steam Stripper and SOG Combustion System SSM plan is triggered by:

Stripper Feed Tank Overflow Definition	Measured time in a discrete 24-hour period, in minutes, when Stripper Feed Tank Level > High Limit (Manual Tag)
Effective Steam Ratio Monitor Malfunction Alarm	"Bad Value" for Foul Condensate Stripper Feed Flow OR Foul Condensate from Feed Preheater B Temperature Out OR Stripper Bottom Temperature OR Reboiler Steam Flow
Condensate Treatment Definition	Discrete 24-hour Methanol Collected * [("A" * ESR Daily Average^2)+("B" * ESR Daily Average) + "C"]/100. The A, B, and C in this equation are manual input tags that can change based on periodic field testing.
Condensate Treatment Requirement Definition	[Discrete 24-hour Methanol Collection Required (lb) + (2.2 lb/ton * Daily Pulp Production (tons))] * 92%
Condensate Methanol Treatment SSM Excursion	Discrete 24-hour Condensate Methanol Treated < MACT I Methanol Treatment Requirement
Stripper Feed Condensate Contamination Malfunction Alarm	Rolling Average of Stripper Feed Condensate Conductivity, sampled every 15 minutes, > High Limit (Manual Tag)
No. 3 Boiler SOG Combustion System Operation Definition	No. 3 Bark Boiler SOG Burn Valve Open AND Trim Condenser SOG Valve Open
No. 3 Boiler SOG Combustion Rupture Disk Failure at Stripper System Excursion	Temperature Downstream from Rupure Disk > 160°F AND SOG Combustion System in Operation
No. 3 Boiler SOG Combustion Rupture Disk Failure at No. 3 Bark Boiler Excursion	Rupture Disk Failed (Tag Status is "OFF") AND SOG Combustion System in Operation
No. 3 Boiler SOG Combustion System Bypass Excursion	SOG Vent Valve is Open AND SOG Combustion System in Operation
No. 4 Boiler SOG Combustion System Operation Definition	No. 4 Bark Boiler SOG Burn Valve Open AND Trim Condenser SOG Valve Open
No. 4 Boiler SOG Combustion Rupture Disk Failure at Stripper System Excursion	Temperature Downstream from Rupure Disk > 160°F AND SOG Combustion System in Operation
No. 4 Boiler SOG Combustion Rupture Disk Failure at No. 3 Bark Boiler Excursion	Rupture Disk Failed (Tag Status is "OFF") AND SOG Combustion System in Operation
No. 4 Boiler SOG Combustion System Bypass Excursion	SOG Vent Valve is Open AND SOG Combustion System in Operation

Panama City Mill Process Flow Diagram
Steam Stripper

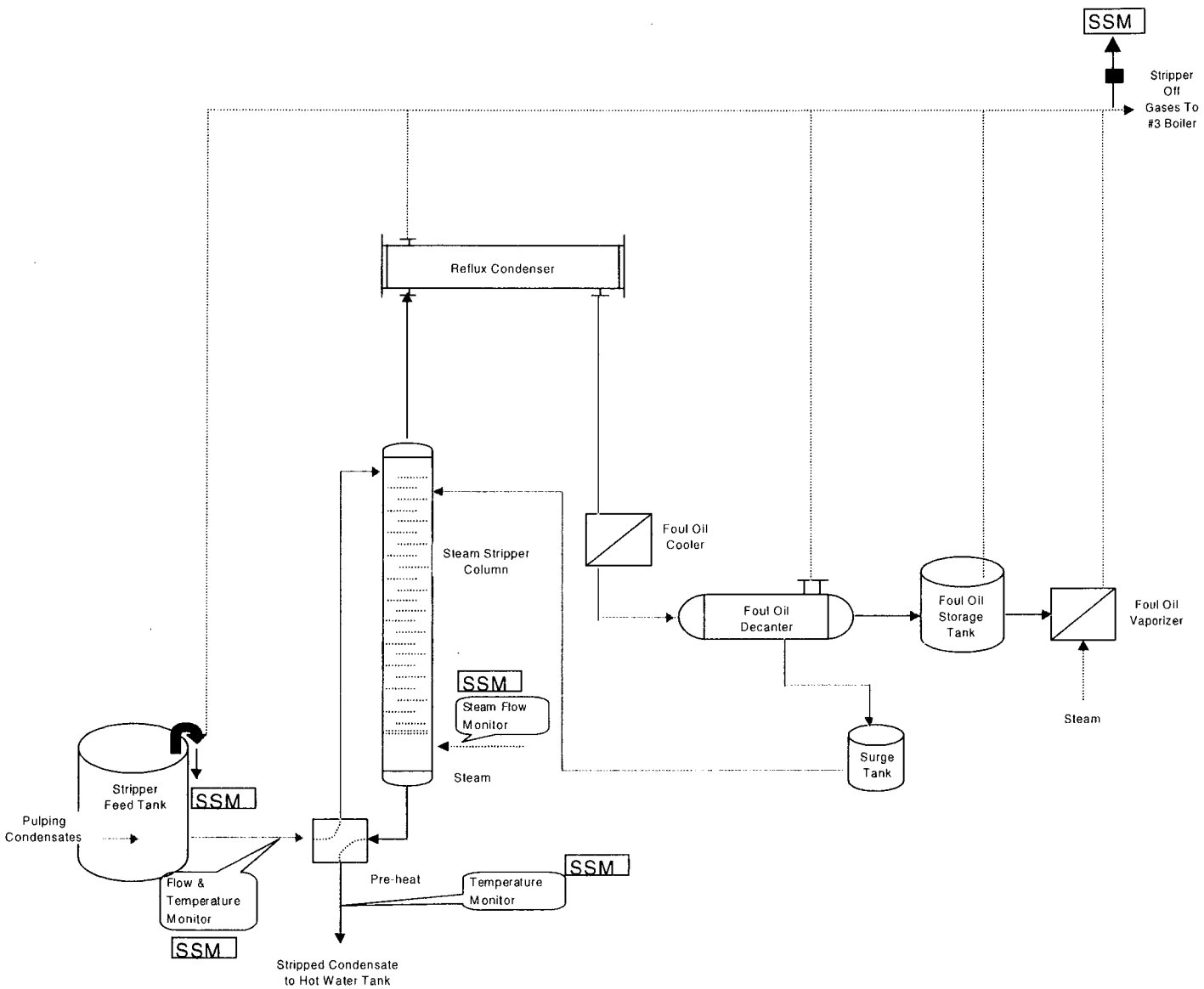

Panama City Mill Process Flow Diagram
#4 Power Boiler - Stripper Overhead Gas Combustion

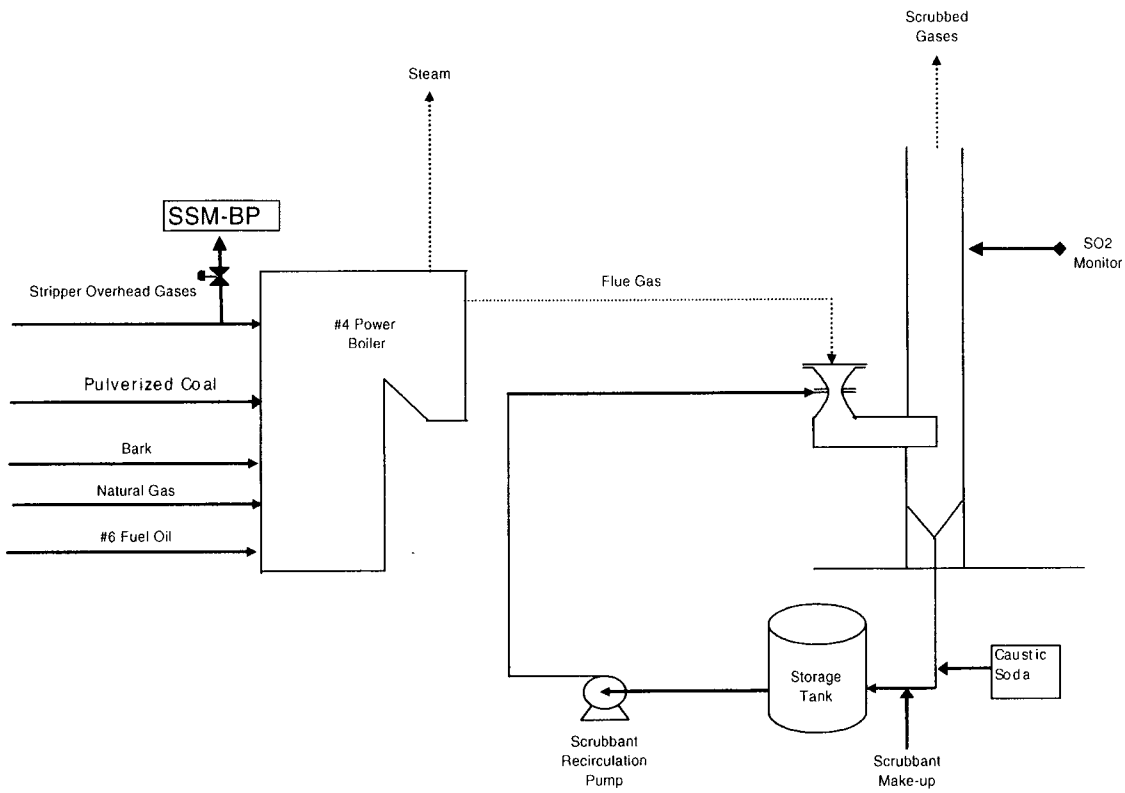

Panama City Mill Process Flow Diagram
#3 Combination Boiler - Stripper Overhead Gas Combustion

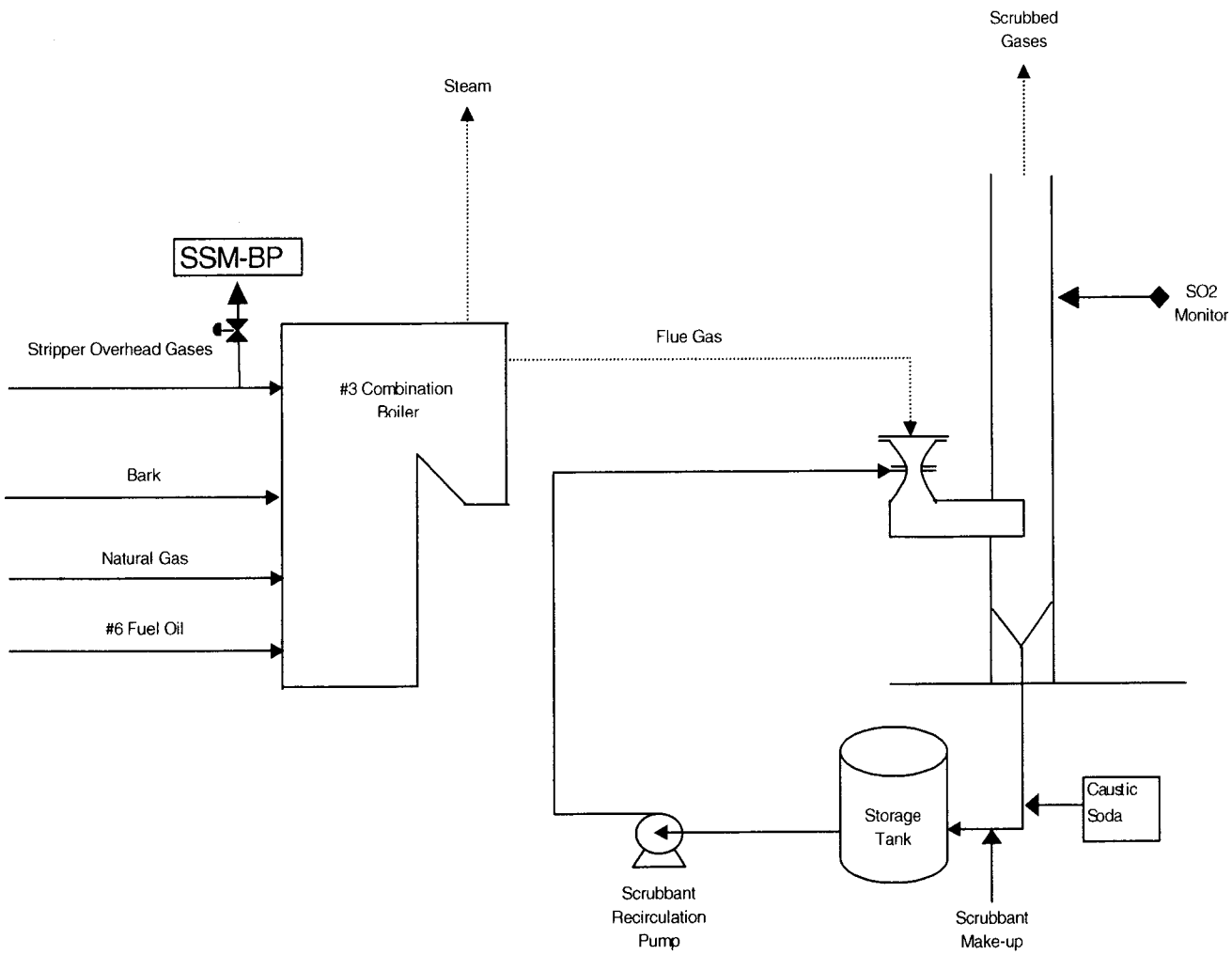

THE SSM PLAN FOR THE BATCH DIGESTER SYSTEM HAS BEEN TRIGGERED!

PLEASE SELECT THE APPROPRIATE SSM PLAN OR INFORMATION:

1. BATCH DIGESTER SYSTEM START-UP PLAN & REPORT FORMS

2. BATCH DIGESTER SYSTEM SHUTDOWN PLAN & REPORT FORMS

3. BATCH DIGESTER SYSTEM MALFUNCTION PLAN & REPORT FORMS

4. BATCH DIGESTER SYSTEM DESCRIPTION & FLOW DIAGRAM

1. BATCH DIGESTER SYSTEM STARTUP EMISSIONS MINIMIZATION CHECKLIST

Below is the definition of the Batch Digester system startup for normal operations and a checklist for the minimization of emissions during the Batch Digester system startup period. The proper sequence for startup is as follows: first startup of the control system, followed by startup of the collection and transportation system, and finally startup of the process equipment that is the source of vent gases or pulping condensate.

The Batch Digester system startup is initiated by the filling of a batch digester, and the startup period ends when the blow heat accumulator has reached stable operating temperature. "Holding" of digesters is defined as ceasing the steaming and blowing of digesters. The Batch Digester System is considered to be "down" when all previously loaded and steamed digesters are transferred to a "hold" status. The Batch System is considered to transition from a "down" to a "run" mode when the steaming or blowing of previously "held" digesters is resumed.

Pre-Startup Checklist

The following conditions should be verified prior to collecting vent gases and pulping condensate from the batch digester system.

- ❑ Are the control systems for vent gases and pulping condensate operating and ready to accept these streams?
- ❑ Is there a water inventory in the accumulator?
- ❑ Is the cooling water system operational for the indirect condensers and the turpentine condensers?
- ❑ Are the accumulator condensers operational?
- ❑ Is the accumulator pressure/vacuum breaker closed?
- ❑ Is the Blow Tank steam padding system on and stable?
- ❑ Is the Blow Heat Accumulator NCG vent open to allow air evacuation during initial Blow Tank steam padding?
- ❑ Are the condensate conductivity diversion systems operating?

Startup Emissions Minimization Checklist

- ❑ Check for proper water seal levels and flows. Verify all pressure and vacuum seals.
- ❑ Verify that the blow heat accumulator and turpentine recovery systems are operating within normal ranges for such process conditions as temperature, pressure, flow, and conductivity.
- ❑ It may take 4 to 6 blows to bring the blow tank and accumulator up to operating temperature. Until the operating temperature is achieved, the blow gas system may vent to atmosphere.

Begin to add the LVHC NCG vent gases and pulping condensate to the appropriate collection systems as soon as practicable during the startup period.

NOTE: THE SSM INCIDENT REPORT ON THE FOLLOWING PAGE MUST BE COMPLETED BY THE OPERATOR!

SSM STARTUP INCIDENT REPORT:

TIME DIGESTER SYSTEM STARTUP PERIOD WAS STARTED: _____

WAS THE SSM CHECKLIST FOLLOWED IN STARTUP OF THE BATCH DIGESTER SYSTEM?* _____

TIME THAT VENTING FROM THE DIGESTER/TURPENTINE SYSTEM BEGAN: _____

TIME THAT VENTING FROM THE DIGESTER/TURPENTINE SYSTEM CEASED: _____

TIME THAT DIGESTER/TURPENTINE SYSTEM CONDENSATE OVERFLOW/DIVERSION BEGAN: _____

TIME THAT DIGESTER/TURPENTINE SYSTEM CONDENSATE OVERFLOW/DIVERSION ENDED: _____

TIME DIGESTER SYSTEM STARTUP COMPLETED: _____

OPERATOR NAME: _____ *DATE:*_____ *TIME:*_____

**IF THE SSM PLAN WAS NOT FOLLOWED IN STARTUP OF THE BATCH DIGESTER SYSTEM, PLEASE EXPLAIN WHAT WAS DONE:*

_____

_____

2. BATCH DIGESTER SYSTEM SHUTDOWN EMISSIONS MINIMIZATION CHECKLIST

Shutdown Procedures

Below is the definition of the transition from normal operations to shutdown and a checklist for the minimization of emissions during the batch digester system shutdown period. The proper sequence of shutdown is the source, followed by the collection and transportation system, and finally the control system. "Holding" of digesters is defined as ceasing the steaming and blowing of digesters. The Batch Digester System is considered to be "down" when all previously loaded and steamed digesters are transferred to a "hold" status. The Batch System is considered to transition from a "down" to a "run" mode when the steaming or blowing of previously "held" digesters is resumed.

Pre- Shutdown Checklists

The following conditions should be verified prior to not collecting vent gases and pulping condensate from the batch digester system.

- ❑ Verify that all digesters are blown empty or in hold status prior to shutdown.

Shutdown Emissions Minimization Checklist

- ❑ Shutdown the batch digester system or hold the digester system prior to shutting down the collection systems for LVHC NCG vent gases and pulping condensate.

Note: It is possible to shutdown the batch digester system for a short time without causing excess emissions if the blow tanks are properly padded with steam and air is not allowed into the blow tanks or accumulator. If excess emissions do not occur, implementation of the SSM plan is not required.

NOTE: THE SSM INCIDENT REPORT ON THE FOLLOWING PAGE MUST BE COMPLETED BY THE OPERATOR!

SSM SHUTDOWN INCIDENT REPORT:

TIME DIGESTER SYSTEM SHUTDOWN PERIOD WAS STARTED: _____

WAS THE SSM CHECKLIST FOLLOWED IN SHUTDOWN OF THE BATCH DIGESTER SYSTEM?* _____

TIME THAT VENTING FROM THE DIGESTER/TURPENTINE SYSTEM BEGAN: _____

TIME THAT VENTING FROM THE DIGESTER/TURPENTINE SYSTEM CEASED: _____

TIME THAT DIGESTER/TURPENTINE SYSTEM CONDENSATE OVERFLOW/DIVERSION BEGAN: _____

TIME THAT DIGESTER/TURPENTINE SYSTEM CONDENSATE OVERFLOW/DIVERSION ENDED: _____

TIME DIGESTER SYSTEM SHUTDOWN COMPLETED: _____

OPERATOR NAME: _____ *DATE:*_____ *TIME:*_____

**IF THE SSM PLAN WAS NOT FOLLOWED IN SHUTDOWN OF THE BATCH DIGESTER SYSTEM, PLEASE EXPLAIN WHAT WAS DONE:*

_____

_____

3. BATCH DIGESTER SYSTEM MALFUNCTION EMISSIONS MINIMIZATION CHECKLIST

Below is a description of the various malfunctions and associated operational events for the batch digester system with the corresponding emissions minimization information. These malfunctions and events include such issues as safety interlocks, process alarms, and equipment failures. The malfunctions listed are those that would likely cause excess emissions of either pulping vent gases or pulping condensate.

Event	Malfunctions and Emissions Minimization Steps	Operational Effect**
Blow Tank Pressure Seal Relief	Malfunctions	
	Blow valve opening too fast	0
	Improper accumulator circulation control loop	0
	Condenser vent pressure valve open	0, S
	Condenser drain plugged	0, S
	Low cooling water supply flow	0, S
	Vent gases are accumulating in system between blows	0
	Plugged flame arrester	B
	Fiber or liquor in accumulator water due to high blow tank level	
	High or low cooling water temperature	0, S
	High cyclone level	0
	Padding Steam control failure	0
	Emissions minimization steps	
	Identify the cause of over pressure.	
	Correct problem and return vent gases to collection system(s).	
	If the problem cannot be corrected in a timely manner, begin to bottle-up or shutdown the digester system, as soon as practicable, if necessary for repairs.	

Description of Malfunctions (continued)

Event	Malfunctions and Emissions Minimization Steps	Operational Effect**
High Blow Heat Condenser or Turpentine Condenser Vent Temperature	<u>Malfunction</u> Low cooling water supply flow Heat exchanger is plugged or plugging High cooling water temperature Condenser system malfunction <u>Emissions minimization steps</u> Divert a colder water source to the condenser If condenser is plugged, begin to bottle-up or shutdown the digester system, when practicable, if necessary for repairs..	 0 S 0 0, S
High Relief Gas Line Pressure	<u>Malfunction</u> Plugged or plugging gas separator or cyclone Plugged or plugging turpentine condenser Plugged or plugging line or other in-line device Plugged flame arrester <u>Emissions minimization steps</u> If the problem cannot be corrected in a timely manner, begin to bottle-up or shutdown the digester system, when practicable, if necessary for repairs..	 B 0 S B, S
Mechanical or Electrical Malfunctions	<u>Malfunctions</u> Power Failure Instrument Loop Failure Pump or Valve Failure Motor Failure <u>Emissions Minimization Steps</u> If possible, continue the collection of vent gases. Monitor the condensate conductivity during the malfunction and divert the minimum amount of condensate. Restore collection or vent gases and condensate as soon as practicable.	 S B, S B, S O, S
High Turpentine Underflow Conductivity	<u>Malfunction</u> Improper gas separation <u>Emissions minimization steps</u> Divert underflow to sewer	 0

Note 1

"O" indicates that the malfunction or device can be verified and corrected while the source is operational.

"B" indicates the malfunction or device can be verified and corrected while the source is operational, but the malfunctioning device must be bypassed and/or isolated.

"S" indicates that the malfunction cannot be verified or corrected while the system is operational. Such a malfunction will require a temporary shutdown to correct the malfunction.

NOTE: THE SSM INCIDENT REPORT ON THE FOLLOWING PAGE MUST BE COMPLETED BY THE OPERATOR!

BATCH DIGESTER SYSTEM - SSM MALFUNCTION INCIDENT REPORT:

WHAT WAS THE NATURE OF MALFUNCTION EVENT? _____

_____

WAS SSM CHECKLIST FOLLOWED FOR SYSTEM MALFUNCTION?* _____

TIME THAT VENTING FROM THE DIGESTER/TURPENTINE SYSTEM BEGAN: _____

TIME THAT VENTING FROM THE DIGESTER/TURPENTINE SYSTEM CEASED: _____

TIME THAT DIGESTER/TURPENTINE SYSTEM CONDENSATE OVERFLOW/DIVERSION BEGAN: _____

TIME THAT DIGESTER/TURPENTINE SYSTEM CONDENSATE OVERFLOW/DIVERSION ENDED: _____

WHAT WAS DONE TO CORRECT THE MALFUNCTION?

_____

_____

OPERATOR NAME: _____ *DATE:*_____ *TIME:*_____

**IF THE SSM PLAN WAS NOT FOLLOWED DURING THE MALFUNCTION OF THE BATCH DIGESTER SYSTEM, PLEASE EXPLAIN WHAT WAS DONE:*

_____

_____

4. BATCH DIGESTER SYSTEM DESCRIPTION & *SYSTEM FLOW DIAGRAM*

The EPA defines a *Digester System* as follows:
"*Digester system* means each continuous digester or each batch digester used for the chemical treatment of wood or non-wood fibers. The digester equipment includes associated flash tank(s), blow tank(s), chip steamer(s) not using fresh steam, blow heat recovery accumulator(s), relief gas condenser(s), and any other equipment serving the same function as those previously listed. The digester system includes any of the liquid streams or condensate associated with the batch or continuous digester relief, blow, or flash steam process."

The EPA defines a *Turpentine Recovery System* as follows:
"*Turpentine recovery system* means all equipment associated with recovering turpentine from digester system gases including condensers, decanters, storage tanks, and any other equipment serving the same function as those previously listed. The turpentine recovery system includes any liquid streams associated with the turpentine recovery process such as turpentine decanter."

The Batch Digester and associated turpentine recovery systems include the following process equipment: Batch Digesters, Relief Gas System, Blow Tank, Blow Heat Recovery & Accumulator, Knot Removal, and Turpentine Recovery. Sources from the Batch Digester system regulated in the Cluster Rule include the following: Low Volume High Concentration (LVHC NCG)Vent Gases from the: Blow Heat Recovery Secondary Condenser, Turpentine Condenser, Turpentine Decanter, and Turpentine Storage Tank(s). Pulping Condensate from the: Turpentine Decanter Underflow, Blow Heat Indirect Condenser Condensate, and Blow Heat Accumulator Overflow.

The Batch Digester System (diagram attached) SSM plan is triggered when:
- **BATCH DIGESTER SYSTEM STARTUP**
- **BATCH DIGESTER SYSTEM SHUTDOWN**
- **BATCH DIGESTER SYSTEM BLOW TANK Pressure Relief**
- **BATCH DIGESTER SYSTEM B.H. Accumulator Tank Overflow***
- **BATCH DIGESTER SYSTEM B.H. Accumulator Tank Pressure Relief**
- **BATCH DIGESTER SYSTEM Accumulator Condensate High Conductivity**

Panama City Mill Process Flow Diagram
Batch Digester System

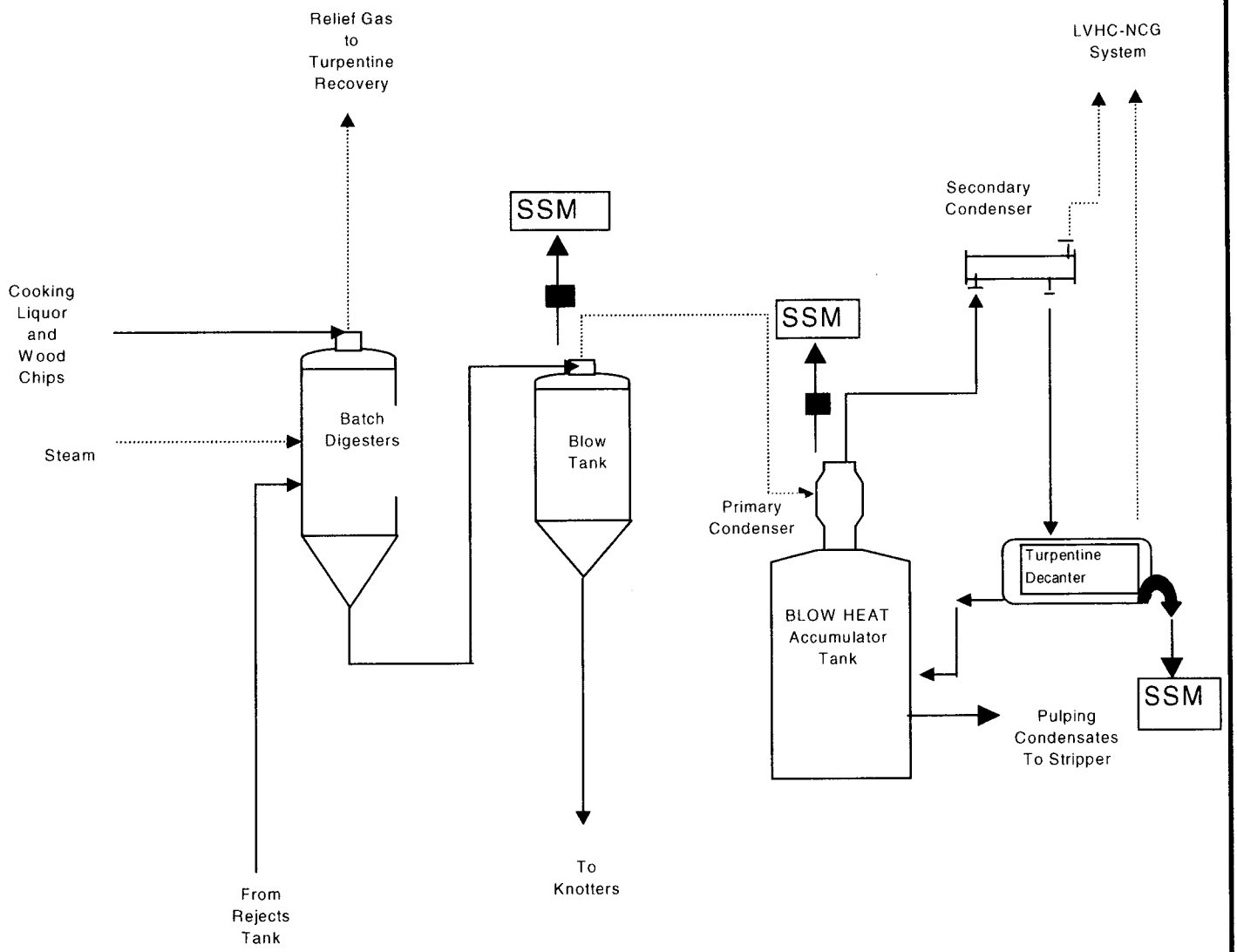

Panama City Mill Process Flow Diagram
Turpentine Recovery System

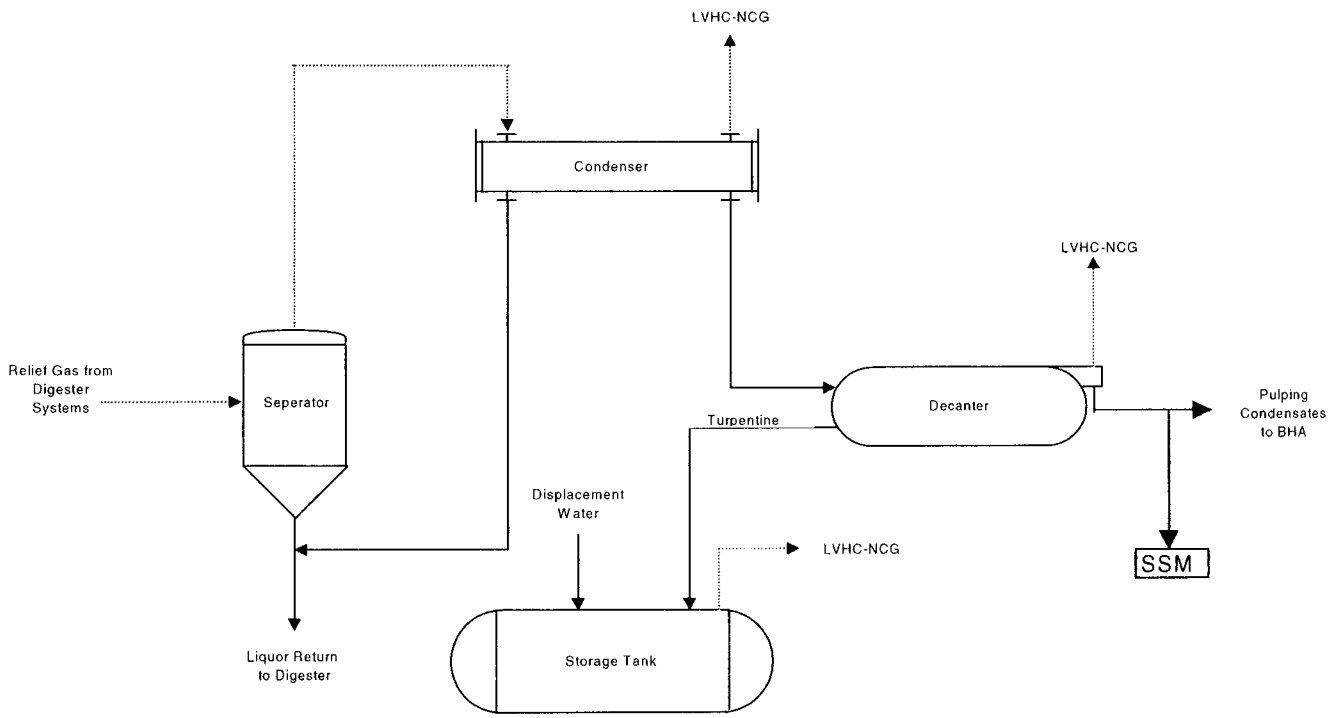

THE SSM PLAN FOR THE EVAPORATOR SYSTEM HAS BEEN TRIGGERED!

PLEASE SELECT THE APPROPRIATE SSM PLAN OR INFORMATION:

1. EVAPORATOR SYSTEM START-UP PLAN & REPORT FORMS

2. EVAPORATOR SYSTEM SHUTDOWN PLAN & REPORT FORMS

3. EVAPORATOR SYSTEM MALFUNCTION PLAN & REPORT FORMS

4. EVAPORATOR SYSTEM DESCRIPTION & FLOW DIAGRAM

1. EVAPORATOR SYSTEM STARTUP EMISSIONS MINIMIZATION CHECKLIST

Following is the definition of the Evaporator system startup for normal operations and a checklist for the minimization of emissions during the Evaporator system startup period. The startup of each evaporator set is initiated with the introduction of weak black liquor to the set. The startup period ends after the vacuum has stabilized (without use of the hogging jet), the NCG vents have closed and foul condensate is collected (if required). If an evaporator boilout can be conducted without operating the hogging jet or venting NCGs, it will not be considered a startup and SSM will not apply.

(Note: Record the time and duration that the hogging jet is operating while black liquor is fed to the evaporator as an excess emission)

Pre-Startup Checklist

The following conditions should be verified prior to collecting vent gases and pulping condensate from the evaporator system.

- ❑ Are the control systems for vent gases and pulping condensate operating and ready to accept the LVHC and pulping condensate streams from the evaporator system?
- ❑ Are the condensate conductivity diversion systems operating normally?
- ❑ Is there adequate capacity in the stripper feed tank for 1-A evaporator startup, if the 1-A condensate will be stripped?

Startup Emissions Minimization Checklist

- ❑ Introduce black liquor to the evaporator system, slowly ramping up the product liquor solids by increasing evaporator steam pressure, until the product liquor solids target set-point has been reached.
- ❑ Try to minimize the time that the hogging jet is operating after liquor feed has begun.
- ❑ Prior to adding condensate to the collection system, verify that the condensate conductivity level is below the conductivity level determined for the specific mill configuration. The conductivity diversion system will automatically send pulping condensate with a high conductivity to the boil out tank.
- ❑ Add LVHC NCG vent gases and pulping condensate to the appropriate collection systems after stable vacuum has been achieved and the hogging jet has been turned off.

NOTE: THE SSM INCIDENT REPORT ON THE FOLLOWING PAGE MUST BE COMPLETED BY THE OPERATOR!

SSM STARTUP INCIDENT REPORT:

TIME LIQUOR FEED TO EVAPORATOR SET BEGAN: _____

WAS THE SSM CHECKLIST FOLLOWED IN STARTUP OF THE EVAPORATOR SYSTEM?* _____

TIME THAT VENTING FROM EVAPORATOR SYSTEM OR HOGGING JET STARTED: _____

TIME THAT VENTING FROM EVAPORATOR SYSTEM AND HOGGING JET CEASED: _____

TIME EVAPORATOR SYSTEM FOUL CONDENSATE DIVERTED OR OVERFLOWED TO SEWER? _____

TIME EVAPORATOR SYSTEM FOUL CONDENSATE COLLECTED AND PUMPED TO FOUL CONDENSATE COLLECTION TANK? _____

TIME THAT EVAPORATOR STARTUP PERIOD ENDED: _____

OPERATOR NAME: _____ *DATE:*_____ *TIME:*_____

**IF THE SSM PLAN WAS NOT FOLLOWED IN STARTING THE EVAPORATOR SYSTEM, PLEASE EXPLAIN WHAT WAS DONE:*

_____

_____

2. EVAPORATOR SYSTEM SHUTDOWN EMISSIONS MINIMIZATION CHECKLIST

Below is the definition of the evaporator system shutdown from normal operations and a checklist for the minimization of emissions during the evaporator system shutdown period. The evaporator shutdown period begins with the end of liquor feed to the evaporator set and ends when the evaporator is flushed with water or combined condensate and the steam is turned off. The proper sequence of shutdown is the source, followed by the collection and transportation system, and finally the control system.

Pre-Shutdown Checklist

The following conditions should be verified prior to shutdown of the evaporator system and diversion of vent gases and pulping condensate from the collection, transportation, and control systems.

- ❑ Are the condensate conductivity diversion systems operating normally?
- ❑ Can the LVHC NCG collection and control systems continue to operate while the evaporator is shutting down?

Shutdown Emissions Minimization Checklist

- ❑ Try to collect the evaporator LVHC NCG gas vents until after the evaporator system has been completely shutdown.

NOTE: THE SSM INCIDENT REPORT ON THE FOLLOWING PAGE MUST BE COMPLETED BY THE OPERATOR!

SSM SHUTDOWN INCIDENT REPORT:

TIME THAT EVAPORATOR SHUTDOWN WAS STARTED: _____

WAS THE SSM CHECKLIST FOLLOWED IN SHUTDOWN OF THE EVAPORATOR SYSTEM?* _____

TIME EVAPORATOR SYSTEM NCG SOURCE VENTS OPENED OR HOGGING JET BEGAN VENTING TO THE ATMOSPHERE: _____

TIME EVAPORATOR SYSTEM FOUL CONDENSATE DIVERTED OR OVERFLOWED TO SEWER? _____

TIME EVAPORATOR SYSTEM NCG SOURCE VENTS CLOSED OR HOGGING JET STOPPED VENTING TO THE ATMOSPHERE: _____

TIME EVAPORATOR SYSTEM FOUL CONDENSATE DIVERTED OR OVERFLOW TO SEWER STOPPED? _____

TIME THAT EVAPORATOR SHUTDOWN WAS COMPLETED: _____

OPERATOR NAME: _____ *DATE:*_____ *TIME:*_____

**IF THE SSM PLAN WAS NOT FOLLOWED IN SHUTTING THE EVAPORATOR SYSTEM DOWN, PLEASE EXPLAIN WHAT WAS DONE:*

_____

_____

3. EVAPORATOR SYSTEM MALFUNCTION EMISSIONS MINIMIZATION CHECKLIST

Below is a description of the various malfunctions and associated operational events for the evaporator system with the corresponding emissions minimization information. These malfunctions and events include such issues as safety interlocks, process alarms, and equipment failures. The malfunctions listed are those that would likely cause excess emissions of either pulping vent gases or pulping condensate.

Event	**Malfunctions and Emissions Minimization Steps**	**Operational Effect**(Note 1)
Foul Condensate Diversion	Malfunctions	
	Vacuum system is surging or cycling	O,S
	Leaking tubes	S
	High liquor level in vapor body	O,S
	Improper mist eliminator operation	S
	High vacuum	O
	Low feed liquor solids	O
	Emissions Minimization Steps	
	Check the evaporator operation by inspecting the individual condensate sight glasses, vacuum system, and level control loops. Correct the operational problem found or observed. Continue to collect and control vent gases and condensate, if this can be done safely. Follow the SSM shutdown procedure if the evaporator system will shutdown for repairs.	
Vacuum Loss – Hogging Jet On While Liquor in Evaporator	Malfunctions	
	Leaking tubes	O, S
	Emissions Minimization Steps	
	Check the evaporator operation by inspecting the vacuum system and the level control loops. Correct the operational problem found or observed. If the vacuum cannot be maintained without hogging jet, shutdown the evaporator set as soon as practicable for repair.	

Event	Malfunctions and Emissions Minimization Steps	Operational Effect(Note 1)
Unexpected shutdown	Malfunctions	
	Power Failure	S
	Critical Instrumentation control loop failure	S
	Safety interlock trip	S
	Steam Ejector Failure	S
	Emissions Minimization Steps	S
	Follow the operating manuals and standard operating procedures for responding to an unplanned outage of the evaporator system. If possible maintain the vent gas collection and control system in operation. If not, divert the vent gases to atmosphere. If possible, divert the pulping condensate to the boil-out tank or spill tank.	

Note 1

"O" indicates that the malfunction or device can be verified and corrected while the source is operational.

"B" indicates the malfunction or device can be verified and corrected while the source is operational, but the malfunctioning device must be bypassed and/or isolated.

"S" indicates that the malfunction cannot be verified or corrected while the system is operational. Such a malfunction will require a temporary shutdown to correct the malfunction.

NOTE: THE SSM MALFUNCTION INCIDENT REPORT ON THE FOLLOWING PAGE MUST BE COMPLETED BY THE OPERATOR!

EVAPORATOR SYSTEM - SSM MALFUNCTION INCIDENT REPORT:

WHAT WAS THE NATURE OF MALFUNCTION EVENT? _____
_____

WAS SSM CHECKLIST FOLLOWED FOR SYSTEM MALFUNCTION?* _____

TIME EVAPORATOR SYSTEM NCG OR HOGGING JET VENTED TO ATMOSPHERE: _____

TIME OF FOUL CONDENSATE OVERFLOW TO SEWER: _____

TIME THAT SYSTEM MALFUNCTION FIXED AND VENTING CEASED: _____

TIME THAT FOUL CONDENSATE OVERFLOW STOPPED: _____

WHAT WAS DONE TO CORRECT THE MALFUNCTION? _____
_____
_____
_____

OPERATOR NAME: _____ *DATE:*_____ *TIME:*_____

**IF THE SSM PLAN WAS NOT FOLLOWED DURING THE MALFUNCTION OF THE EVAPORATOR SYSTEM, PLEASE EXPLAIN WHAT WAS DONE:*
_____
_____

4. EVAPORATOR SYSTEM DESCRIPTION & FLOW DIAGRAM

The EPA defines an ***Evaporator System*** as follows: "*Evaporator System* means all equipment associated with increasing the solids content and/or concentrating spent cooking liquor from pulp washing system including pre-evaporators, multi-effect evaporators, concentrators, and vacuum systems, as well as associated condensers, hotwells, and condensate streams, and any other equipment serving the same function as those previously listed."

The EPA defines ***Black Liquor*** as follows: "*Black liquor* means spent cooking liquor that has been separated from the pulp produced by the Kraft, soda, or semi-chemical pulping process."

The EPA defines ***Spent Liquor*** as follows: "*Spent liquor* means process liquid generated from the separation of cooking liquor from pulp by the pulp washing system containing dissolved organic wood materials and residual cooking compounds."

The Evaporator System includes the following process equipment: Evaporator Effects (typically 5 or 6), Recirculation and Transfer Pumps, Soap separation System, and the Vacuum System (including Condenser(s), Steam Ejector(s), Hotwell(s))

Sources in the Panama City Mill Evaporator system subject to Cluster Rule requirements include the following:

- Low Volume High Concentration NCG Vent Gases from the Vacuum System Vent (typically the Hotwell).
- Segregated (1-A Evaporator set- see following flow diagram) condensate from: Weak Liquor Feed Effects, External Pre-heaters, Baffled Condensing Sections, and Vacuum system condensate from Surface Condenser and Vacuum System after-coolers.

The Panama City Mill SSM Plan is triggered by the following evaporator system events:

- **1-A EVAPORATOR SET STARTUP**
- **1-A EVAPORATOR SET SHUTDOWN**
- **1-A EVAPORATOR SET Hogging Jet Operation***
- **1-A EVAPORATOR SET Condensate High Conductivity Diversion****
- **1-A EVAPORATOR SET Hotwell Overflow****
- **Pre EVAPORATOR SET Startup**
- **Pre EVAPORATOR SET Shutdown**
- **Pre EVAPORATOR SET Hogging Jet Operation***
- **3 EVAPORATOR SET Startup**
- **3 EVAPORATOR SET Shutdown**
- **3 EVAPORATOR SET Hogging Jet Operation***

***at times other than startup when the evaporator is operating on liquor**

**** only when <u>not</u> producing Bleached Hardwood Pulp**

Panama City Mill Process Flow Diagram
A-1 Evaporator Process Flow

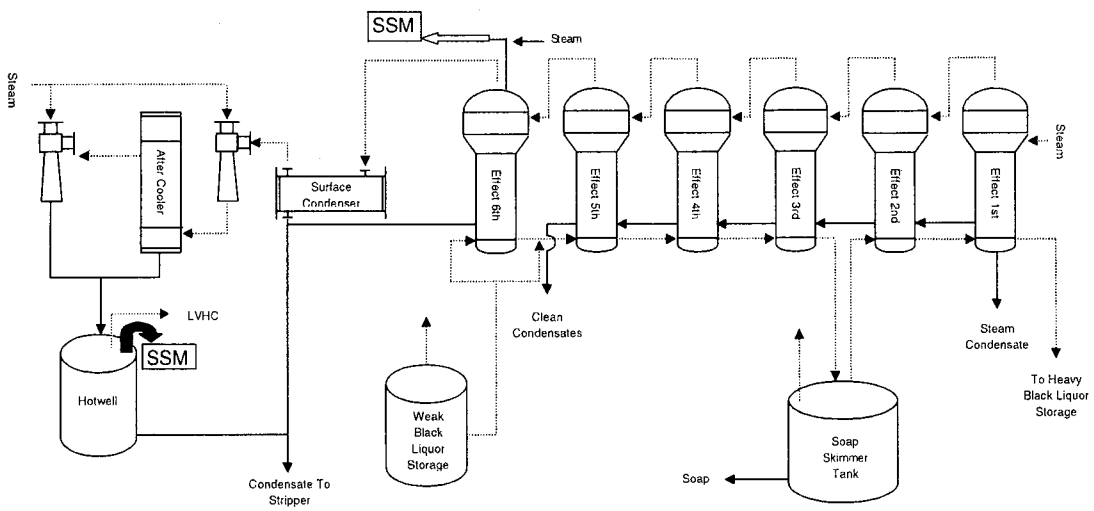

THE SSM PLAN FOR THE KRAFT PULP BLEACHING SYSTEM HAS BEEN TRIGGERED!

PLEASE SELECT THE APPROPRIATE SSM PLAN OR INFORMATION:

1. **BLEACHING SYSTEM START-UP PLAN & REPORT FORMS**
2. **BLEACHING SYSTEM SHUTDOWN PLAN & REPORT FORMS**
3. **BLEACHING SYSTEM MALFUNCTION PLAN & REPORT FORMS**
4. **BLEACHING SYSTEM DISCRIPTION & FLOW DIAGRAM**

1. BLEACHING SYSTEM STARTUP EMISSIONS MINIMIZATION CHECKLIST

Below is the definition of the system startup for normal operations and a checklist for the minimization of emissions during the system startup period. The Pulp Bleaching system operation is initiated by adding Chlorine Dioxide to unbleached pulp in the first ClO_2 mixer. **The operation of the Bleach Plant Gas Collection and Scrubbing System must always precede the Pulp Bleaching system startup**. The Bleach Plant Gas System is an air dilute system and can be operational prior to process sources being operational without a compromise to safety or operating costs. The Pulp Bleaching system startup period is defined as beginning with the startup of the Bleach Plant Gas Collection and Scrubbing System and ends after saleable bleached pulp enters the bleached high density pulp storage chest.

Pre-Startup Checklist

The following conditions must be verified prior to adding chlorine dioxide to the pulp in the first ClO_2 mixer.

- ❑ Is the Bleach Plant Scrubber operating within the targeted fan flow/amperage, scrubber flow and scrubber pH ranges?
- ❑ Have all the collection hoods and vent lines been checked and verification completed insuring that there are no visible emissions?

Startup Emissions Minimization Checklist

- ❑ Begin startup of the Bleach Plant following mill standard operating procedures.
- ❑ Insure all vent gases, from process equipment that uses chlorinated compounds, is being collected and sent to the Bleach Plant scrubber.
- ❑ Verify proper operation of the Bleach Plant scrubber.

NOTE: THE SSM INCIDENT REPORT ON THE FOLLOWING PAGE MUST BE COMPLETED BY THE OPERATOR!

BLEACHING SYSTEM SSM STARTUP INCIDENT

WAS THE SSM CHECKLIST FOLLOWED IN STARTUP OF THE BLEACHING SYSTEM?* _____

TIME BLEACHING SYSTEM SCRUBBER OPERATIONS ARE WITHIN REQUIRED PARAMETRIC MONITORING RANGES: _____

TIME OF INITIAL CHLORINE DIOXIDE FEED TO THE BLEACHING SYSTEM: _____

TIME THAT VENTING FROM BLEACHING SYSTEM VENT COLLECTION STARTED: _____

TIME THAT VENTING FROM BLEACHING SYSTEM VENT COLLECTION CEASED: _____

TIME SALEABLE PULP PRODUCED AND FLOWING INTO THE BLEACHED HIGH DENSITY PULP STORAGE CHEST? _____

OPERATOR NAME: _____ *DATE:*_____ *TIME:*_____

**IF THE SSM PLAN WAS NOT FOLLOWED IN STARTING THE BLEACHING SYSTEM, PLEASE EXPLAIN WHAT WAS DONE:*

_____

_____

2. BLEACHING SYSTEM SHUTDOWN EMISSIONS MINIMIZATION CHECKLIST

Shutdown Procedures
Below is the definition of the transition from normal operations to shutdown and a checklist for the minimization of emissions during the system shutdown period.

The Pulp Bleaching system shutdown is initiated by stopping addition of Chlorine Dioxide to unbleached pulp in the first ClO_2 mixer. **The operation of the Bleach Plant Gas Collection and Scrubbing System must always continue after the Pulp Bleaching system shutdown**. The Bleach Plant Gas System is an air dilute system and can be operational prior to process sources being operational without a compromise to safety or operating costs. The Pulp Bleaching system shutdown period is defined as beginning with the end of Chlorine Dioxide addition to unbleached pulp and the shutdown period ends after all bleaching towers are empty, bleached pulp pumping has stopped, and the Bleach Plant Gas Collection and Scrubbing System has been shutdown.

Pre-Shutdown Checklist
The following conditions must be verified prior shutdown of the Bleach Plant Gas Collection and Scrubbing System.

- ☐ Has the Bleach Plant been shutdown and all pulp in the process equipment using chlorinated compounds been processed?

Shutdown Emissions Minimization Checklist

- ☐ The Bleach Plant Gas Collection and Scrubbing System should be operated until the Bleach Plant sources are shutdown (and vented to atmosphere) following the source specific shutdown procedures
- ☐ Shutdown all area collection and scrubber fans.
- ☐ Proceed to shutdown all Bleach Plant Gas collection system equipment.
- ☐ Shutdown the Bleach Plant scrubber

NOTE: THE SSM INCIDENT REPORT ON THE FOLLOWING PAGE MUST BE COMPLETED BY THE OPERATOR!

BLEACHING SYSTEM SSM SHUTDOWN INCIDENT REPORT

WAS THE SSM CHECKLIST FOLLOWED IN SHUTDOWN OF THE BLEACHING SYSTEM?* _____

TIME THAT CHLORINE DIOXIDE USAGE CEASED: _____

TIME THAT PULP FLOW STOPPED: _____

TIME THAT BLEACHING SYSTEM SCRUBBER SHUT DOWN: _____

OPERATOR NAME: _____ *DATE:*_____ *TIME:*_____

**IF THE SSM PLAN WAS NOT FOLLOWED IN SHUTTING THE BLEACHING SYSTEM DOWN, PLEASE EXPLAIN WHAT WAS DONE:*

_____

_____

3. BLEACHING SYSTEM MALFUNCTION EMISSIONS MINIMIZATION CHECKLIST

Below is a description of the various Pulp Bleaching System and Bleach Plant vent gas collection and scrubbing system malfunction events with the corresponding corrective actions or troubleshooting guides. These malfunction events include safety interlocks, process alarms, and equipment failures. The malfunction items listed are those that would trigger a "vent to atmosphere" condition.

Event	**Malfunctions and Emissions Minimization Steps**	**Operational Effect**(Note 1)
Loss of or Low Bleach Plant Scrubber Recirculating Liquid Flow	Malfunctions Scrubber saddles plugged Scrubber recirculation pump failure Emission Minimization Steps Determine the nature of the problem. Switch to the spare scrubber recirculation pump, if the pump is the cause. If the repair will take a prolonged length of time, shut the Pulp Bleaching System down as soon as practicable.	B, S
Scrubber liquid ORP or pH range exceedance	Malfunctions Scrubber caustic makeup pump failure ORP or pH instrument failure Emission Minimization Steps Verify that scrubber makeup chemical pump flow is in normal range. If makeup flow is low, switch to spare caustic or white liquor pump if available. Call for calibration of the pH and ORP gauges. Calibrate or replace the probes as necessary. If the repair will take a prolonged length of time, shut the Pulp Bleaching System down as soon as practicable.	

Event	Malfunctions and Emissions Minimization Steps	Operational Effect(Note 1)
Gas blower or fan inoperable Other Mechanical Failure	Malfunctions Motor failure Bearing failure Impeller failure Emission Minimization Steps Take maintenance action to repair the malfunction. If the repair will take a prolonged length of time, the Pulp Bleaching system will need to be shutdown, as soon as practicable.	 S S S
Electrical Component Failure	Malfunctions Instrument Loop Failure Power Failure Emissions minimization steps If the malfunction is at the vent gas source, isolate the problem by venting the source. Take maintenance action to repair the malfunction. If the repair will take a prolonged length of time, the Pulp Bleaching system will need to be shutdown as soon as practicable.	 B, S S

Note 1

"O" indicates that the malfunction or device can be verified and corrected while the source is operational.

"B" indicates the malfunction or device can be verified and corrected while the source is operational, but the malfunctioning device must be bypassed and/or isolated.

"S" indicates that the malfunction cannot be verified or corrected while the system is operational. Such a malfunction will require a temporary shutdown to correct the malfunction.

NOTE: THE SSM MALFUNCTION INCIDENT REPORT ON THE FOLLOWING PAGE MUST BE COMPLETED BY THE OPERATOR!

BLEACHING SYSTEM - SSM MALFUNCTION INCIDENT REPORT:

WHAT WAS THE NATURE OF MALFUNCTION EVENT? _____

_____

WAS SSM CHECKLIST FOLLOWED FOR SYSTEM MALFUNCTION?* _____

TIME OF SCURBBER/GAS COLLECTION SYSTEM MALFUNCTION: _____

TIME PULP BLEACHING SYSTEM OPERATION CEASED OR THE TIME BLEACHING SYSTEM SCRUBBER OPERATIONS ARE WITHIN REQUIRED PARAMETRIC MONITORING RANGES: _____

WHAT WAS DONE TO FIX THE MALFUNCTION? _____

_____

_____

OPERATOR NAME: _____ *DATE:*_____ *TIME:*_____

**IF THE SSM PLAN WAS NOT FOLLOWED DURING THE MALFUNCTION OF THE BLEACHING SYSTEM, PLEASE EXPLAIN WHAT WAS DONE:*

_____

_____

4. BLEACHING SYSTEM DESCRIPTION & FLOW DIAGRAM

System Description

The EPA defines a ***Bleaching System*** as follows:

"*Bleaching system* means all process equipment after high-density pulp storage prior to the first application of oxidizing chemicals or reducing chemicals following the pulping system, up to and including the final bleaching stage."

The EPA defines ***Bleaching*** as follows:

"*Bleaching* means brightening of pulp by the addition of oxidizing chemicals or reducing chemicals."

The EPA defines ***Bleaching Line*** as follows:
"*Bleaching line* means a group of bleaching stages arranged in series such that bleaching of the pulp progresses as the pulp moves from one stage to the next."

The EPA defines ***Bleaching Stage*** as follows:

"*Bleaching stage* means all process equipment associated with a discrete step of chemical application and removal in the bleaching process including chemical and steam mixers, bleaching towers, washers, seal (filtrate) tanks, vacuum pumps, and any other equipment serving the same function as those previously listed."

The Bleach Plant Gas System may include the following process equipment: Source Balancing valves, Washer Hoods, Ducting, Gas Blower(s),Steam Coil Air Heaters, and a Bleach System Scrubber

The bleach plant vent gas collection system collects from the following process equipment that use chlorinated compounds:
Towers
Washers
Filtrate Tanks
Vacuum Pump Exhausts

The bleach plant vent gas collection system is an air dilute open vent collection system. In this sense, the system is "decoupled" from the process

equipment, similar to the HVLC system of the pulp mill, meaning that the collection system can continue to run even when the process equipment is down. Therefore, upsets that cause the process source equipment to go down do not necessarily cause the bleach plant vent collection system to vent or go down unless the process upset introduces fiber or liquor carryover into the vent collection system. For purposes of the SSM plan, the startup, shutdown, and malfunction events are limited to those that affect the vent gas collection system directly.

The Panama City Bleaching System SSM Plan is triggered by the following events:

- **BLEACHING SYSTEM STARTUP**
- **BLEACHING SYSTEM SHUTDOWN**
- **BLEACHING SYSTEM SCRUBBER ORP or pH Range Alarm**
- **BLEACHING SYSTEM SCRUBBER Gas Flow Range Alarm**
- **BLEACHING SYSTEM SCRUBBER Liquid Flow Alarm**
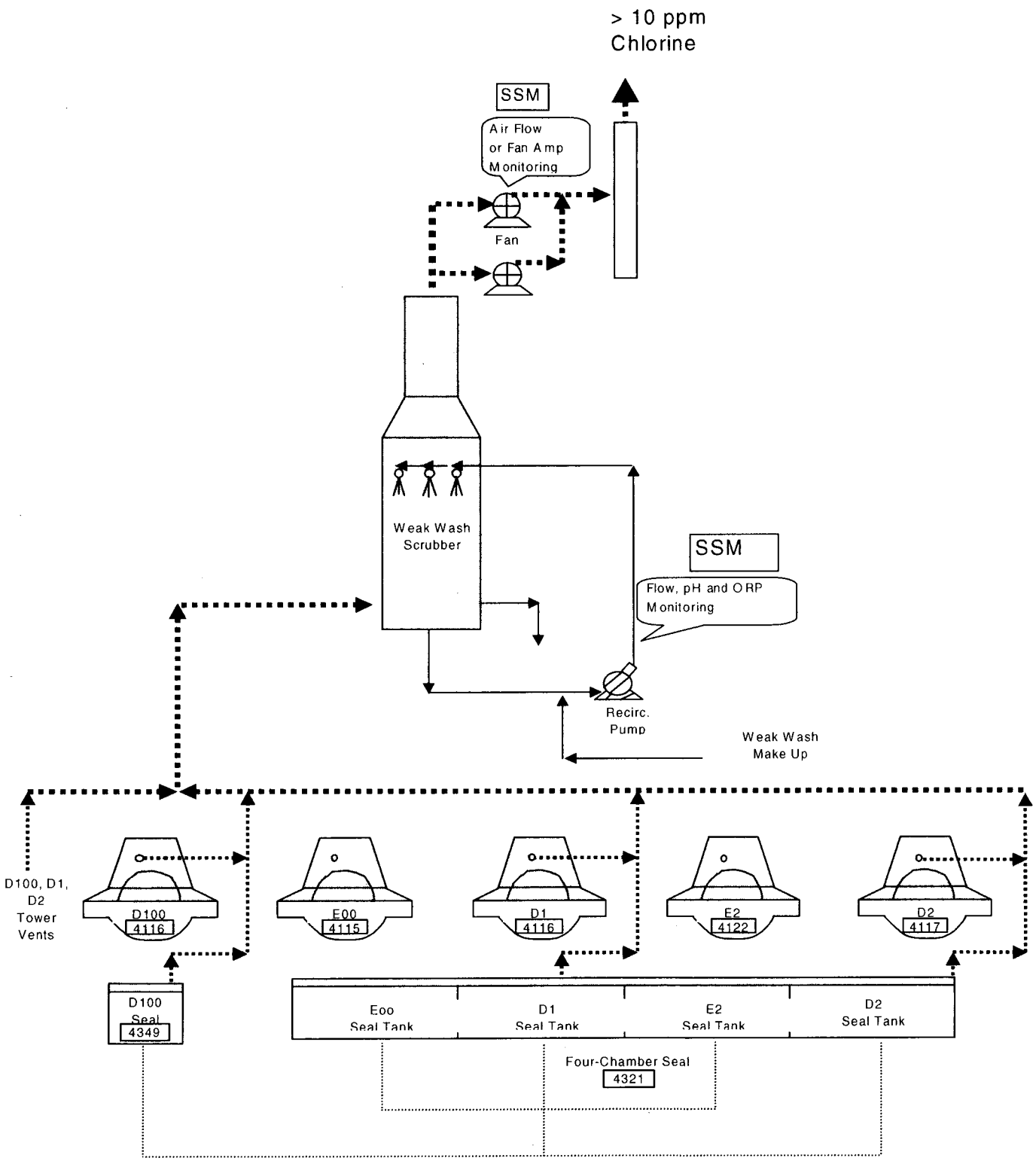
PANAMA CITY PROCESS FLOW DIAGRAM
BLEACHING SYSTEM SCRUBBER