**FLORIDA
FIRST
PROCESSING
L.P.**
Protecting Florida's Environmental Future

RCRA Part B & Air Permit Application

Volume II

APPENDIX D-5

DRAWING NUMBER	DRAWING TITLE	CUR REV NO.	REV DATE	DRAWING STATUS	DSPL	REMARKS
00-F-001	Incinerator Block Flow Diagram	F	10/01/90	IFP	PROC	Resubmitted (10/15/90)
00-F-002	Organic Waste Receiving, Sampling, Analysis, Blending Block Flow Dia	D	04/21/89	IFP	PROC	
00-F-003	Inorganic Waste Receiving, Sampling, Analysis & Treat Block Flow Dia	D	04/21/89	IFP	PROC	
00-F-004	Inorganic Treatment System Block Flow Diagram	E	05/17/89	IFP	PROC	
00-F-010	Process Flowsheet Symbols and Nomenclature	D	04/21/89	IFP	PROC	
00-F-011	Organic Treat Bulk Pump.Unloading & Contain. Waste Handl. Flowsheet	G	10/01/90	IFP	PROC	Resubmitted (10/15/90)
00-F-012	Organic Treatment Pumpable Waste Storage Flowsheet	F	10/01/90	IFP	PROC	Resubmitted (10/15/90)
00-F-013	Organic Treatment Burner System Flowsheet	H	10/01/90	IFP	PROC	Resubmitted (10/15/90)
00-F-014	Organic Treatment Thermal Processing Flowsheet	G	10/01/90	IFP	PROC	Resubmitted (10/15/90)
00-F-015	Organic Treatment Air Pollution Control Flowsheet	I	10/08/90	IFP	PROC	Resubmitted (10/15/90)
00-F-016	Organic Treatment Emission Control System Flowsheet	H	10/01/90	IFP	PROC	Resubmitted (10/15/90)
00-F-017	Trial Burn Sampling & Monitoring Location Flowsheet	G	10/01/90	IFP	PROC	Resubmitted (10/15/90)
00-F-018	Heat & Material Balance Trial Burn Test 3	E	10/15/90	IFP	PROC	Resubmitted (10/15/90)
00-F-019	Water Balance	B	05/04/89	IFA	PROC	
00-F-030	Inorganic Treatment, Containerized Waste Handling Flowsheet	G	10/01/90	IFP	PROC	Resubmitted(10/15/90)

DRAWING STATUS

NST: DRAWING NOT STARTED	CHK: CHECKED
PLN: PLANNING DRAWING	IFP: ISSUED FOR PERMIT
DRF: IN DEVELOPMENT	REV: REVISION IN PROGRESS
IFA: ISSUED FOR CLIENT APPROVAL	AFP: APPROVE FOR PURCHASE
IIR: ISSUED FOR INTERNAL REVIEW	AFC: APPROVED FOR CONST.
AFD: APPROVED FOR DESIGN	CKG: CHECK IN PROGRESS

NOTES

CLIENT: MIDCON DEV

PROJECT NO: 8813

PROJECT: FLORIDA FIRST

ENG. PHASE:

IWES DRAWING CONTROL LOG

ISSUED BY: R. FERRARI
DATE ISSUED: 10/11/89
DATE UPDATE DUE: 11/30/90
NEXT ISSUE DATE:
SHEET: 1 OF 13

DRAWING NUMBER	DRAWING TITLE	CUR REV NO.	REV DATE	DRAWING STATUS	DSPL	REMARKS
00-F-031	Inorganic Treatment Bulk Pumpable Waste Handling Flowsheet	G	10/01/90	IFP	PROC	Resubmitted (10/15/90)
00-F-032	Inorganic Treatment Pumpable Waste Storage Sht 1 of 2	F	05/17/89	IFP	PROC	
00-F-033	Inorganic Treatment Pumpable Waste Storage Sht 2 of 2	F	05/17/89	IFP	PROC	
00-F-034	Inorganic Treatment Reactants Storage Flowsheet	E	05/04/89	IFP	PROC	
00-F-035	Inorganic Treatment Multi-Purpose Reactors Flowsheet	F	05/04/89	IFP	PROC	
00-F-036	Inorganic Treatment, Cyanide Reactor Flowsheet	E	05/04/89	IFP	PROC	
00-F-037	Inorganic Treatment Sludge Dewatering Flowsheet	G	10/01/90	IFP	PROC	Resubmitted(10/15/90)
00-F-038	Inorganic Treatment Emission Control System Flowsheet	D	05/04/89	IFP	PROC	
00-F-039	Stabilization Flowsheet	E	10/01/90	IFP	PROC	Resubmitted(10/15/90)
00-F-048	P&ID Symbols and Nomenclature	E	9/08/89	IFP	PROC	
00-F-049	P&ID Organic Treatment Bulk Pumpables Unloading	H	10/01/90	IFP	PROC	Resubmitted(10/15/90)
00-F-050	P&ID Organic Treatment Containerized Waste Handling Flowsheet	H	10/01/90	IFP	PROC	Resubmitted(10/15/90)
00-F-051	P&ID Organic Treatment Pumpable Waste Storage Feed Headers	E	9/08/89	IFP	PROC	
00-F-052	P&ID Organic Treatment Pumpable Waste Storage Emptying Headers	G	10/01/90	IFP	PROC	Resubmitted(10/15/90)
00-F-053	P&ID Organic Treatment Organic Receiving/Holding Tank Sht. 1 of 6	F	9/08/89	IFP	PROC	

DRAWING STATUS

NST: DRAWING NOT STARTED
PLN: PLANNING DRAWING
DRF: IN DEVELOPMENT
IFA: ISSUED FOR CLIENT APPROVAL
IIR: ISSUED FOR INTERNAL REVIEW
AFD: APPROVED FOR DESIGN
CHK: CHECKED
IFP: ISSUED FOR PERMIT
REV: REVISION IN PROGRESS
AFP: APPROVE FOR PURCHASE
AFC: APPROVED FOR CONST.
CKG: CHECK IN PROGRESS

NOTES

CLIENT: MIDCON DEV

PROJECT NO: 8813
PROJECT: FLORIDA FIRST
ENG. PHASE:

IWES DRAWING CONTROL LOG

DATE ISSUED: 10/11/89
DATE UPDATE DUE: 11/30/90
NEXT ISSUE DATE:
SHEET: 2 OF 13

DRAWING NUMBER	DRAWING TITLE	CUR REV NO.	REV DATE	DRAWING STATUS	DSPL	REMARKS
00-F-054	P&ID Organic Treatment Organic Receiving/Holding Tank Sht. 2 of 6	E	9/08/89	IFP	PROC	
00-F-055	P&ID Organic Treatment Organic Receiving/Holding Tank Sht. 3 of 6	E	9/08/89	IFP	PROC	
00-F-056	P&ID Organic Treatment Organic Receiving/Holding Tank Sht. 4 of 6	E	9/08/89	IFP	PROC	
00-F-057	P&ID Organic Treatment Organic Receiving/Holding Tank Sht. 5 of 6	E	9/08/89	IFP	PROC	
00-F-058	P&ID Organic Treatment Organic Receiving/Holding Tank Sht. 6 of 6	E	9/08/89	IFP	PROC	
00-F-059	P&ID Organic Treatment Sludge Holding Tank	F	9/08/89	IFP	PROC	
00-F-060	P&ID Organic Treatment Sludge Feed Tank	E	9/08/89	IFP	PROC	
00-F-061	P&ID Organic Treatment Low-btu Liquid Feed Tank	F	9/08/89	IFP	PROC	
00-F-062	P&ID Organic Treatment High-Btu Liquid Feed Tank Sheet 1 of 2	G	9/08/89	IFP	PROC	
00-F-063	P&ID Organic Treatment High-Btu Liquid Feed Tank Sheet 2 of 2	F	9/08/89	IFP	PROC	
00-F-064	P&ID Organic Treatment Primary Combustion Feed System Sheet 1 of 2	G	10/01/90	IFP	PROC	Resubmitted (10/15/90)
00-F-065	P&ID Organic Treatment Primary Combustion Feed System Sheet 2 of 2	F	10/01/90	IFP	PROC	Resubmitted (10/15/90)
00-F-066	P&ID Organic Treatment SCC Feed System Sheet 1 of 2	E	9/08/89	IFP	PROC	
00-F-067	P&ID Organic Treatment SCC Feed System Sheet 2 of 2	G	10/01/90	IFP	PROC	Resubmitted (10/15/90)
00-F-068	P&ID Organic Treatment Bulk Solids Unloading/Handling	G	10/01/90	IFP	PROC	Resubmitted (10/15/90)

DRAWING STATUS		NOTES	CLIENT: MIDCON DEV	IWES DRAWING CONTROL LOG
NST: DRAWING NOT STARTED	CHK: CHECKED			
PLN: PLANNING DRAWING	IFP: ISSUED FOR PERMIT		PROJECT NO: 8813	ISSUED BY: R. FERRARI
DRF: IN DEVELOPMENT	REV: REVISION IN PROGRESS			DATE ISSUED: 10/11/89
IFA: ISSUED FOR CLIENT APPROVAL	AFP: APPROVE FOR PURCHASE		PROJECT: FLORIDA FIRST	DATE UPDATE DUE: 11/30/90
IIR: ISSUED FOR INTERNAL REVIEW	AFC: APPROVED FOR CONST.			NEXT ISSUE DATE:
AFD: APPROVED FOR DESIGN	CKG: CHECK IN PROGRESS		ENG. PHASE:	SHEET: 3 OF 13

DRAWING NUMBER	DRAWING TITLE	CUR REV NO.	REV DATE	DRAWING STATUS	DSPL	REMARKS
00-F-069	P&ID Organic Treatment Solids Feed System	F	9/08/89	IFP	PROC	
00-F-070	P&ID Organic Treatment Primary & Secondary Combustion Chamber	F	9/08/89	IFP	PROC	
00-F-074	P&ID Organic Treatment Preheater & SDA	F	9/08/89	IFP	PROC	
00-F-075	P&ID Organic Treatment Fabric Filter	E	9/08/89	IFP	PROC	
00-F-076	P&ID Organic Treatment Incinerator I.D. Fan & Stack	F	10/01/90	IFP	PROC	Resubmitted (10/15/90)
00-F-077	P&ID Organic Treatment Dried Solids System	E	10/08/90	IFP	PROC	Resubmitted (10/15/90)
00-F-080	P&ID Organic Treatment Emission Control System	H	10/01/90	IFP	PROC	Resubmitted (10/15/90)
00-F-090	P&ID Lime Slaker System				PROC	
00-F-091	P&ID Lime Slaker System				PROC	
00-F-098	P&ID Inorgan. Treat. Alkaline/Cyanide Container Waste Handling Sht. 1 of	F	10/01/90	IFP	PROC	Resubmitted (10/15/90)
00-F-099	P&ID Inorgan. Treat. Alkaline/Cyanide Container Waste Handling Sht. 2 of	F	10/08/90	IFP	PROC	Resubmitted (10/15/90)
00-F-100	P&ID Inorgan. Treat. Acidic/Chromate Container Waste Handling Sht. 1 O	F	10/01/90	IFP	PROC	Resubmitted (10/15/90)
00-F-101	P&ID Inorgan. Treat. Acidic/Chromate Container Waste Handling Sht. 2 O	G	10/01/90	IFP	PROC	Resubmitted (10/15/90)
00-F-102	P&ID Inorganic Treatment Bulk Pumpables Handling	I	10/01/90	IFP	PROC	Resubmitted (10/15/90)
00-F-103	P&ID Inorganic Treatment Chromate Waste Manifold and Feed Pumps	F	9/08/89	IFP	PROC	

DRAWING STATUS

NST: DRAWING NOT STARTED
PLN: PLANNING DRAWING
DRF: IN DEVELOPMENT
IFA: ISSUED FOR CLIENT APPROVAL
IIR: ISSUED FOR INTERNAL REVIEW
AFD: APPROVED FOR DESIGN
CHK: CHECKED
IFP: ISSUED FOR PERMIT
REV: REVISION IN PROGRESS
AFP: APPROVE FOR PURCHASE
AFC: APPROVED FOR CONST.
CKG: CHECK IN PROGRESS

NOTES

CLIENT: MIDCON DEV

PROJECT NO: 8813

PROJECT: FLORIDA FIRST

ENG. PHASE:

IWES DRAWING CONTROL LOG

ISSUED BY: R. FERRARI
DATE ISSUED: 10/11/89
DATE UPDATE DUE: 11/30/90
NEXT ISSUE DATE:
SHEET: 4 OF 13

DRAWING NUMBER	DRAWING TITLE	CUR REV NO.	REV DATE	DRAWING STATUS	DSPL	REMARKS
00-F-104	P&ID Inorganic Treatment Acidic Waste Manifold & Feed Pumps	F	9/08/89	IFP	PROC	
00-F-105	P&ID Inorganic Treatment Chromate Waste Storage Tanks Sht. 1 of 6	G	9/08/89	IFP	PROC	
00-F-106	P&ID Inorganic Treatment Chromate Waste Storage Tanks Sht. 2 of 6	F	9/08/89	IFP	PROC	
00-F-107	P&ID Inorganic Treatment Chromate Waste Storage Tanks Sht. 3 of 6	G	9/08/89	IFP	PROC	
00-F-108	P&ID Inorganic Treatment Chromate Waste Storage Tanks Sht. 4 of 6	F	9/08/89	IFP	PROC	
00-F-109	P&ID Inorganic Treatment Chromate Waste Storage Tanks Sht. 5 of 6	F	9/08/89	IFP	PROC	
00-F-110	P&ID Inorganic Treatment Chromate Waste Storage Tanks Sht. 6 of 6	F	9/08/89	IFP	PROC	
00-F-111	P&ID Inorganic Treatment Acid Waste Storage Tanks Sht 1 of 4	G	9/08/89	IFP	PROC	
00-F-112	P&ID Inorganic Treatment Acid Waste Storage Tanks Sht 2 of 4	F	9/08/89	IFP	PROC	
00-F-113	P&ID Inorganic Treatment Acid Waste Storage Tanks Sht 3 of 4	F	9/08/89	IFP	PROC	
00-F-114	P&ID Inorganic Treatment Acid Waste Storage Tanks Sht 4 of 4	F	9/08/89	IFP	PROC	
00-F-115	P&ID Inorganic Treatment Alkaline Waste Storage Tanks Sht. 1 of 2	G	9/08/89	IFP	PROC	
00-F-116	P&ID Inorganic Treatment Alkaline Waste Storage Tanks Sht. 2 of 2	C	9/08/89	IFP	PROC	
00-F-117	P&ID Inorganic Treatment Cyanide Waste Storage Tanks Sht. 1 of 2	H	9/08/89	IFP	PROC	
00-F-118	P&ID Inorganic Treatment Cyanide Waste Storage Tanks Sht. 2 of 2	G	9/08/89	IFP	PROC	

DRAWING STATUS

NST: DRAWING NOT STARTED
PLN: PLANNING DRAWING
DRF: IN DEVELOPMENT
IFA: ISSUED FOR CLIENT APPROVAL
IIR: ISSUED FOR INTERNAL REVIEW
AFD: APPROVED FOR DESIGN
CHK: CHECKED
IFP: ISSUED FOR PERMIT
REV: REVISION IN PROGRESS
AFP: APPROVE FOR PURCHASE
AFC: APPROVED FOR CONST.
CKG: CHECK IN PROGRESS

NOTES

CLIENT: MIDCON DEV

PROJECT NO: 8813
PROJECT: FLORIDA FIRST
ENG. PHASE:

IWES DRAWING CONTROL LOG

ISSUED BY: R. FERRARI
DATE ISSUED: 10/11/89
DATE UPDATE DUE: 11/30/90
NEXT ISSUE DATE:
SHEET: 5 OF 13

DRAWING NUMBER	DRAWING TITLE	CUR REV NO.	REV DATE	DRAWING STATUS	DSPL	REMARKS
00-F-119	P&ID Inorganic Treatment Reactants Sheet 1 of 2				PROC	
00-F-120	P&ID Inorganic Treatment Reactants Sheet 2 of 2				PROC	
00-F-121	P&ID Inorganic Treatment Distribution to Multi-Purpose & Cyanide Reacto	G	9/08/89	IFP	PROC	
00-F-122					PROC	
00-F-123	P&ID Inorganic Treatment Multi-Purpose Reactors Sheet 1 of 3	H	9/08/89	IFP	PROC	
00-F-124	P&ID Inorganic Treatment Multi-Purpose Reactors Sheet 2 of 3	G	9/08/89	IFP	PROC	
00-F-125	P&ID Inorganic Treatment Multi-Purpose Reactors Sheet 3 of 3	G	9/08/89	IFP	PROC	
00-F-126	P&ID Inorganic Treatment Cyanide Reactor	H	9/08/89	IFP	PROC	
00-F-127	P&ID Inorganic Treatment Sludge Dewatering	G	10/01/90	IFP	PROC	Resubmitted (10/15/90)
00-F-128	P&ID Inorganic Treatment Emmission Control System	G	10/01/90	IFP	PROC	Resubmitted (10/15/90)
00-F-129	P&ID Inorganic Treatment Filtrate Buffer Tank	B	10/08/90	IFP	PROC	Resubmitted (10/15/90)
00-F-130	P&ID Stabilization Storage Silo	C	9/08/89	IFP	PROC	
00-F-131	P&ID Stabilization Feed System	E	10/01/90	IFP	PROC	Resubmitted (10/15/90)
00-F-132	P&ID Stabilization Mixing System	E	10/01/90	IFP	PROC	Resubmitted (10/15/90)

DRAWING STATUS

NST: DRAWING NOT STARTED
PLN: PLANNING DRAWING
DRF: IN DEVELOPMENT
IFA: ISSUED FOR CLIENT APPROVAL
IIR: ISSUED FOR INTERNAL REVIEW
AFD: APPROVED FOR DESIGN
CHK: CHECKED
IFP: ISSUED FOR PERMIT
REV: REVISION IN PROGRESS
AFP: APPROVE FOR PURCHASE
AFC: APPROVED FOR CONST.
CKG: CHECK IN PROGRESS

NOTES

CLIENT: MIDCON DEV

PROJECT NO: 8813
PROJECT: FLORIDA FIRST
ENG. PHASE:

IWES DRAWING CONTROL LOG

ISSUED BY: R. FERRARI
DATE ISSUED: 10/11/89
DATE UPDATE DUE: 11/30/90
NEXT ISSUE DATE:
SHEET: 6 OF 13

DRAWING NUMBER	DRAWING TITLE	CUR REV NO.	REV DATE	DRAWING STATUS	DSPL	REMARKS
00-M-001	Site Plan	J	9/21/90	IFP	MECH	Resubmitted (10/15/90)
00-M-002	Traffic Route Plan	F	9/21/90	IFP	MECH	Resubmitted (10/15/90)
00-M-003	Emergency Equipment & Communication Plan	F	9/21/90	IFP	MECH	Resubmitted (10/15/90)
00-M-004.1	Evacuation Plan To Rally Pt. A	F	9/21/90	IFP	MECH	Resubmitted (10/15/90)
00-M-004.2	Evacuation Plan To Rally Pt. B	F	9/21/90	IFP	MECH	Resubmitted (10/15/90)
00-M-005	Paving Plan	F	9/21/90	IFP	MECH	Resubmitted (10/15/90)
00-M-006	Air Emission Point Sources & Emission Control Systems Plan	B	10/21/90	IFP	MECH	Resubmitted (10/15/90)
00-M-010	G.A. Truck & Lugger Box Staging Plan Sections	E	9/21/90	IFP	MECH	Resubmitted (10/15/90)
00-M-011	G.A. Organic Treatmrny Tank Truck Unloading Plans & Sections	E	9/21/90	IFP	MECH	Resubmitted (10/15/90)
00-M-012	G.A. Organic Treatment Container Truck Unloading Plans & Sections	F	9/21/90	IFP	MECH	Resubmitted (10/15/90)
00-M-013	G.A. Organic Treatment Railroad Tank Car Unloading	F	9/21/90	IFP	MECH	Resubmitted (10/15/90)
00-M-014	G.A. Organic Treatment Pumpable Waste Storage Plans & Sections	G	9/21/90	IFP	MECH	Resubmitted (10/15/90)
00-M-015.1	G.A. Organic Treatment Container Processing Plan	E	9/21/90	IFP	MECH	Resubmitted (10/15/90)
00-M-015.2	G.A. Organic Treatment Container Staging Plan	E	9/21/90	IFP	MECH	Resubmitted (10/15/90)
00-M-016	G.A. Organic Treatment Container Staging Sections	E	9/21/90	IFP	MECH	Resubmitted (10/15/90)

DRAWING STATUS		NOTES	CLIENT: MIDCON DEV	IWES DRAWING CONTROL LOG
NST: DRAWING NOT STARTED	CHK: CHECKED			
PLN: PLANNING DRAWING	IFP: ISSUED FOR PERMIT		PROJECT NO: 8813	ISSUED BY: R. FERRARI
DRF: IN DEVELOPMENT	REV: REVISION IN PROGRESS			DATE ISSUED: 10/11/89
IFA: ISSUED FOR CLIENT APPROVAL	AFP: APPROVE FOR PURCHASE		PROJECT: FLORIDA FIRST	DATE UPDATE DUE: 11/30/90
IIR: ISSUED FOR INTERNAL REVIEW	AFC: APPROVED FOR CONST.			NEXT ISSUE DATE:
AFD: APPROVED FOR DESIGN	CKG: CHECK IN PROGRESS		ENG. PHASE:	SHEET: 7 OF 13

DRAWING NUMBER	DRAWING TITLE	CUR REV NO.	REV DATE	DRAWING STATUS	DSPL	REMARKS
00-M-017	G.A. Organic Treatment Bulk Solids Unloading & Handling Plan & Sections	E	9/21/90	IFP	MECH	Resubmitted (10/15/90)
00-M-018	G.A. Organic Treatment Kiln Feed Plans & Sections	E	9/21/90	IFP	MECH	Resubmitted (10/15/90)
00-M-019	G.A. Organic Treatment Kiln & Gas Cleaning Plan	F	10/08/90	IFP	MECH	Resubmitted (10/15/90)
00-M-020	G.A. Organic Treatment Kiln & Gas Cleaning Elevation	E	10/08/90	IFP	MECH	Resubmitted (10/15/90)
00-M-021	Arrangement-Organic Treatment Kiln Feed Hood	E	9/21/90	IFP	MECH	Resubmitted (10/15/90)
00-M-022	G.A. Residue Storage Plan	D	9/21/90	IFP	MECH	Resubmitted (10/15/90)
00-M-023	G.A. Residue Storage Sections	D	9/21/90	IFP	MECH	Resubmitted (10/15/90)
00-M-024	G.A. Stabilization Plans & Sections	D	9/21/90	IFP	MECH	Resubmitted (10/15/90)
00-M-025	G.A. Railroad Car Loading/Unloading Plan & Sections	E	9/21/90	IFP	MECH	Resubmitted (10/15/90)
00-M-026	G.A. Organic Treatment Dried Solids System Plans & Sections	E	9/21/90	IFP	MECH	Resubmitted (10/15/90)
00-M-030	G.A. Inorganic Treatment Pumpable Waste Unloading & Storage Plan/Sectio	F	9/21/90	IFP	MECH	Resubmitted (10/15/90)
00-M-031	G.A. Inorganic Treatment Non-Pumpable Waste Handling Plan & Sections	E	9/21/90	IFP	MECH	Resubmitted (10/15/90)
00-M-032	G.A. Inorganic Treatment Container Unloading & Staging Plan & Sections	E	10/08/90	IFP	MECH	Resubmitted (10/15/90)
00-M-033	G.A. Inorganic Treatment Reagent Unloading & Storage Plan & Sections	E	9/21/90	IFP	MECH	Resubmitted (10/15/90)

DRAWING STATUS

NST:	DRAWING NOT STARTED	CHK:	CHECKED
PLN:	PLANNING DRAWING	IFP:	ISSUED FOR PERMIT
DRF:	IN DEVELOPMENT	REV:	REVISION IN PROGRESS
IFA:	ISSUED FOR CLIENT APPROVAL	AFP:	APPROVE FOR PURCHASE
IIR:	ISSUED FOR INTERNAL REVIEW	AFC:	APPROVED FOR CONST.
AFD:	APPROVED FOR DESIGN	CKG:	CHECK IN PROGRESS

NOTES

CLIENT: MIDCON DEV

PROJECT NO: 8813

PROJECT: FLORIDA FIRST

ENG. PHASE:

IWES DRAWING CONTROL LOG

ISSUED BY: R. FERRARI
DATE ISSUED: 10/11/89
DATE UPDATE DUE: 11/30/90
NEXT ISSUE DATE:
SHEET: 8 OF 13

DRAWING NUMBER	DRAWING TITLE	CUR REV	REV DATE	DRAWING STATUS	DSPL	REMARKS
00–M–034	G.A. Inorganic Treatment Sludge Dewatering Plans & Sections	E	9/21/90	IFP	MECH	Resubmitted (10/15/90)
00–M–035	G.A. Inorganic Treatment Reactor Tanks Plan & Sections	E	9/27/90	IFP	MECH	Resubmitted (10/15/90)
00–M–036	G.A. Inorganic Treatment Filtrate Buffer Tank Plan & Sections	C	10/08/90	IFP	MECH	Resubmitted (10/15/90)

DRAWING STATUS		NOTES	CLIENT: MIDCON DEV	IWES DRAWING CONTROL LOG
NST: DRAWING NOT STARTED	CHK: CHECKED			
PLN: PLANNING DRAWING	IFP: ISSUED FOR PERMIT		PROJECT NO: 8813	ISSUED BY: R. FERRARI
DRF: IN DEVELOPMENT	REV: REVISION IN PROGRESS			DATE ISSUED: 10/11/89
IFA: ISSUED FOR CLIENT APPROVAL	AFP: APPROVE FOR PURCHASE		PROJECT: FLORIDA FIRST	DATE UPDATE DUE: 11/30/90
IIR: ISSUED FOR INTERNAL REVIEW	AFC: APPROVED FOR CONST.			NEXT ISSUE DATE:
AFD: APPROVED FOR DESIGN	CKG: CHECK IN PROGRESS		ENG. PHASE:	SHEET: 9 OF 13

DRAWING NUMBER	DRAWING TITLE	CUR REV NO.	REV DATE	DRAWING STATUS	DSPL	REMARKS
00-P-001	Site Plan Pipe Rack Arrangements	B	9/21/90	IFP	MECH	Resubmitted (10/15/90)
00-P-002	G.A.-Organic Treatment Tank Truck Unloading Plans & Sections w/Piping	B	9/21/90	IFP	MECH	Resubmitted (10/15/90)
00-P-003	G.A.-Organic Treatment Railroad Tank Car Unloading with Piping	B	9/21/90	IFP	MECH	Resubmitted (10/15/90)
00-P-004	G.A.-Organic Treatment Pumpable Waste Storage Plan & Section w/Piping	C	9/21/90	IFP	MECH	Resubmitted (10/15/90)
00-P-005	G.A.-Organic Treatment Container Staging Plan with Piping	B	9/21/90	IFP	MECH	Resubmitted (10/15/90)
00-P-006	G.A.-Organic Treatment Container Staging Sections with Piping	B	9/21/90	IFP	MECH	Resubmitted (10/15/90)
00-P-007	G.A.-Organic Treat. Bulk Solids Unloading & Handling Plan with Piping	B	9/21/90	IFP	MECH	Resubmitted (10/15/90)
00-P-008	G.A.-Organic Treatment Kiln Feed Plans & Sections with Piping	B	9/21/90	IFP	MECH	Resubmitted (10/15/90)
00-P-009	G.A.- Organic Treatment Kiln & Gas Cleaning Plan with Piping	B	10/08/90	IFP	MECH	Resubmitted (10/15/90)
00-P-010	G.A.-Organic Treatment Kiln & Gas Cleaning Elevation with Piping	B	10/08/90	IFP	MECH	Resubmitted (10/15/90)
00-P-011	G.A.-Stabilization Plans and Sections with Piping	B	9/21/90	IFP	MECH	Resubmitted (10/15/90)
00-P-012	G.A.-Organic Treatment Dried Solids System Plans & Sections w/Piping	B	9/21/90	IFP	MECH	Resubmitted (10/15/90)
00-P-013	G.A.-Inorganic Treatment Pumpable Waste Unloading & Storage Plan w/Pi	B	9/21/90	IFP	MECH	Resubmitted (10/15/90)
00-P-014	G.A.-Inorganic Treatment Non-Pumpable Waste Handling Plan w/Piping	B	9/21/90	IFP	MECH	Resubmitted (10/15/90)
00-P-015	G.A.-Inorganic Treatment Container Unloading & Staging Plan w/Piping	B	10/08/90	IFP	MECH	Resubmitted (10/15/90)

DRAWING STATUS

NST: DRAWING NOT STARTED
PLN: PLANNING DRAWING
DRF: IN DEVELOPMENT
IFA: ISSUED FOR CLIENT APPROVAL
IIR: ISSUED FOR INTERNAL REVIEW
AFD: APPROVED FOR DESIGN
CHK: CHECKED
IFP: ISSUED FOR PERMIT
REV: REVISION IN PROGRESS
AFP: APPROVE FOR PURCHASE
AFC: APPROVED FOR CONST.
CKG: CHECK IN PROGRESS

NOTES

CLIENT: MIDCON DEV

PROJECT NO: 8813
PROJECT: FLORIDA FIRST
ENG. PHASE:

IWES DRAWING CONTROL LOG

ISSUED BY: R. FERRARI
DATE ISSUED: 10/11/89
DATE UPDATE DUE: 11/30/90
NEXT ISSUE DATE:
SHEET: 10 OF 13

DRAWING NUMBER	DRAWING TITLE	CUR REV NO.	REV DATE	DRAWING STATUS	DSPL	REMARKS
00-P-016	G.A.-Inorganic Treatment Reagent Unloading & Storage Plan w/Piping	B	9/27/90	IFP	MECH	Resubmitted (10/15/90)
00-P-017	G.A.-Inorganic Treatment Sludge Dewatering Plans & Sections w/Piping	B	9/21/90	IFP	MECH	Resubmitted (10/15/90)
00-P-018	G.A.-Inorganic Treatment Reactor Tanks Plan & Sections with Piping	B	9/27/90	IFP	MECH	Resubmitted (10/15/90)
00-P-019	G.A.-Inorganic Treatment Filtrate Buffer Tank Plan & Section With Piping	C	10/08/90	IFP	MECH	Resubmitted (10/15/90)

DRAWING STATUS		NOTES	CLIENT: MIDCON DEV	IWES DRAWING CONTROL LOG
NST: DRAWING NOT STARTED	CHK: CHECKED			
PLN: PLANNING DRAWING	IFP: ISSUED FOR PERMIT		PROJECT NO: 8813	ISSUED BY: R. FERRARI
DRF: IN DEVELOPMENT	REV: REVISION IN PROGRESS			DATE ISSUED: 10/11/89
IFA: ISSUED FOR CLIENT APPROVAL	AFP: APPROVE FOR PURCHASE		PROJECT: FLORIDA FIRST	DATE UPDATE DUE: 11/30/90
IIR: ISSUED FOR INTERNAL REVIEW	AFC: APPROVED FOR CONST.			NEXT ISSUE DATE:
AFD: APPROVED FOR DESIGN	CKG: CHECK IN PROGRESS		ENG. PHASE:	SHEET: 11 OF 13

DRAWING NUMBER	DRAWING TITLE	CUR REV NO.	REV DATE	DRAWING STATUS	DSPL	REMARKS
00-S-001	Organic Treatment Tanks-Foundation Plan Pumpable Waste Storage	E	9/21/90	IFP	C/S	Resubmitted (10/15/90)
00-S-002	Organic Treatment Tank Truck Unloading Foundation Plan & Sections	D	9/21/90	IFP	C/S	Resubmitted (10/15/90)
00-S-003	Organic Treatment Tanks-Foundation Sections/Details Pumpable Waste Stor	D	9/21/90	IFP	C/S	Resubmitted (10/15/90)
00-S-004	Truck & Lugger Box Staging Foundation Plan and Sections	E	9/21/90	IFP	C/S	Resubmitted (10/15/90)
00-S-005	Organic Treatment Container Staging Foundation Plan	D	9/21/90	IFP	C/S	Resubmitted (10/15/90)
00-S-006	Organic Treatment Misc. Foundation Section & Details	D	9/21/90	IFP	C/S	Resubmitted (10/15/90)
00-S-007	Organic Treatment Container Truck Unloading Foundation Plan & Sections	E	9/21/90	IFP	C/S	Resubmitted (10/15/90)
00-S-008	Organic Treatment Bulk Solids Unloading & Handling Foundation Plans	E	9/21/90	IFP	C/S	Resubmitted (10/15/90)
00-S-009	Organic Treatment Bulk Solids Unloading & Handling Found. Section/Detail	E	9/21/90	IFP	C/S	Resubmitted (10/15/90)
00-S-010	Organic Treatment Kiln Feed Foundation Plan	E	9/21/90	IFP	C/S	Resubmitted (10/15/90)
00-S-011	Organic Treatment Dried Solids System Foundation Plan & Sections	F	9/21/90	IFP	C/S	Resubmitted (10/15/90)
00-S-012	Organic TreatmentRailroad Tank Car Unloading Foundation Plan & Sections	F	9/21/90	IFP	C/S	Resubmitted (10/15/90)
00-S-013	Residue Storage Foundation Plan	D	9/21/90	IFP	C/S	Resubmitted (10/15/90)
00-S-014	Site Drainage Plan	F	9/21/90	IFP	C/S	Resubmitted (10/15/90)
00-S-015	Organic Treatment Ash Loadout Foundation Plan	C	9/21/90	IFP	C/S	Resubmitted (10/15/90)

DRAWING STATUS

NST: DRAWING NOT STARTED	CHK: CHECKED
PLN: PLANNING DRAWING	IFP: ISSUED FOR PERMIT
DRF: IN DEVELOPMENT	REV: REVISION IN PROGRESS
IFA: ISSUED FOR CLIENT APPROVAL	AFP: APPROVE FOR PURCHASE
IIR: ISSUED FOR INTERNAL REVIEW	AFC: APPROVED FOR CONST.
AFD: APPROVED FOR DESIGN	CKG: CHECK IN PROGRESS

NOTES

CLIENT: MIDCON DEV

PROJECT NO: 8813

PROJECT: FLORIDA FIRST

ENG. PHASE:

IWES DRAWING CONTROL LOG

ISSUED BY: R. FERRARI
DATE ISSUED: 10/11/89
DATE UPDATE DUE: 11/30/90
NEXT ISSUE DATE:
SHEET: 12 OF 13

DRAWING NUMBER	DRAWING TITLE	CUR REV NO.	REV DATE	DRAWING STATUS	DSPL	REMARKS
00-S-016	RR Car Loading/Unloading Foundation Plan & Sections	D	9/21/90	IFP	C/S	Resubmitted (10/15/90)
00-S-017	Stabilization Foundation Plans	C	9/21/90	IFP	C/S	Resubmitted (10/15/90)
00-S-018	Stabilization Foundation Sections & Details	C	9/21/90	IFP	C/S	Resubmitted (10/15/90)
00-S-030	Inorganic Treatment Pumpable Waste Unloading & Storage Foundation Plan	F	9/21/90	IFP	C/S	Resubmitted (10/15/90)
00-S-031	Inorganic Treatment Pumpable Waste Unloading & Storage Found.Sect/Deta	E	9/21/90	IFP	C/S	Resubmitted (10/15/90)
00-S-032	Inorganic Treatment Non-Pumpable Waste Handling Foundation Plan	F	9/21/90	IFP	C/S	Resubmitted (10/15/90)
00-S-033	Inorganic Treatment Non-Pumpable Waste Handling Found. Sections & Det	F	9/21/90	IFP	C/S	Resubmitted (10/15/90)
00-S-034	Inorganic Treatment Sludge Dewatering & Reactor Tanks Foundation Plans	E	9/21/90	IFP	C/S	Resubmitted (10/15/90)
00-S-035	Inorganic Treatment Foundation Sections & Details	E	9/21/90	IFP	C/S	Resubmitted (10/15/90)
00-S-036	Inorganic Treatment Container Unloading & Staging Foundation Plan	F	9/21/90	IFP	C/S	Resubmitted (10/15/90)
00-S-037	Inorganic Treatment Misc. Foundation Sections & Details	E	9/21/90	IFP	C/S	Resubmitted (10/15/90)
00-S-038	Inorgnic Treatment Reagent Unloading & Storage Foundation Plan	F	9/21/90	IFP	C/S	Resubmitted (10/15/90)
00-S-039	Grading Plan	D	9/21/90	IFP	C/S	Resubmitted (10/15/90)
00-S-040	Inorganic Treatment Filtrate Buffer Tank Foundation Plan & Sections	C	10/08/90	IFP	C/S	Resubmitted (10/15/90)

DRAWING STATUS

NST: DRAWING NOT STARTED
PLN: PLANNING DRAWING
DRF: IN DEVELOPMENT
IFA: ISSUED FOR CLIENT APPROVAL
IIR: ISSUED FOR INTERNAL REVIEW
AFD: APPROVED FOR DESIGN
CHK: CHECKED
IFP: ISSUED FOR PERMIT
REV: REVISION IN PROGRESS
AFP: APPROVE FOR PURCHASE
AFC: APPROVED FOR CONST.
CKG: CHECK IN PROGRESS

NOTES

CLIENT: MIDCON DEV

PROJECT NO 8813
PROJECT: FLORIDA FIRST
ENG. PHASE:

IWES DRAWING CONTROL LOG

ISSUED BY: R. FERRARI
DATE ISSUED: 10/11/89
DATE UPDATE DUE: 11/30/90
NEXT ISSUE DATE:
SHEET: 13 OF 13

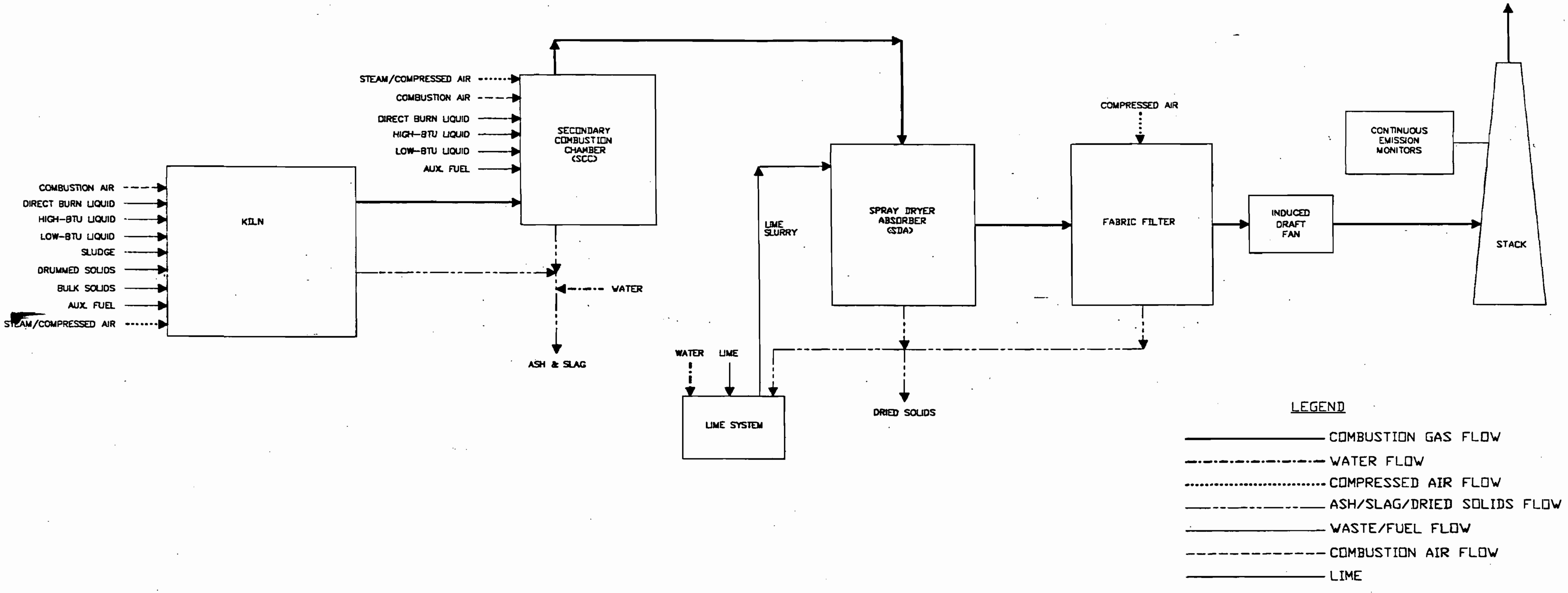

[illegible]

REV.	DATE	REVISION	BY	CHKD
F	10/01/90	REVISED FOR NODs	R.W.G.	
E	05/4/89	GENERAL REVISION	L.C.O.	L.O.C.
D	04/21/89	ISSUED FOR PERMIT	L.C.O.	L.O.C.
C	01/12/89	ISSUED FOR CLIENT	L.C.O.	L.O.C.
B	12/12/88	ISSUED FOR CLIENT	RLM	L.O.C.
A	11/10/88	ISSUED FOR INTERNAL REVIEW	RGF	L.O.C.

PROJECT
FLORIDA FIRST
PROCESSING, INC.

SCALE: NONE

international
WasteEnergy
Systems
ST. LOUIS, MO.

TITLE
INCINERATOR
BLOCK FLOW DIAGRAM

DRAWN	DATE	APPD	DATE	DRAWING NO.	REV.
RGF	11/10/88		8/11/90	8813-00-F-001	F
CHKD	DATE		DATE		

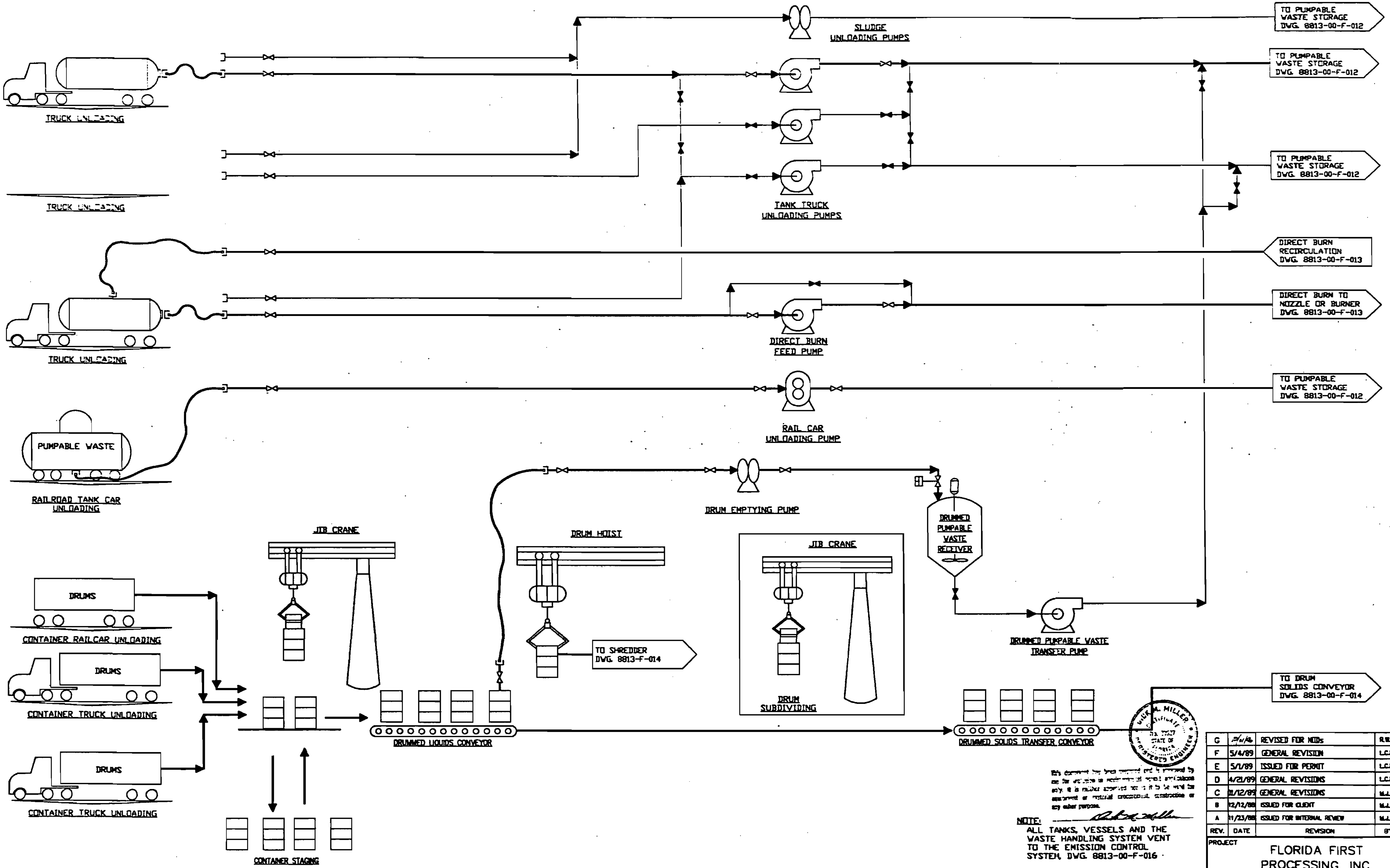

This document has been prepared and is approved by me for inclusion in environmental permit applications only. It is neither approved nor is it to be used for equipment or material procurement, construction or any other purpose.

NOTE:
ALL TANKS, VESSELS AND THE WASTE HANDLING SYSTEM VENT TO THE EMISSION CONTROL SYSTEM, DWG. 8813-00-F-016

REV.	DATE	REVISION	BY	
G	[illegible]	REVISED FOR NODs	R.W.G.	[illegible]
F	5/4/89	GENERAL REVISION	L.C.D.	L.D.C.
E	5/1/89	ISSUED FOR PERMIT	L.C.D.	L.D.C.
D	4/21/89	GENERAL REVISIONS	L.C.D.	L.D.C.
C	1/12/89	GENERAL REVISIONS	M.J.A.	L.D.C.
B	12/12/88	ISSUED FOR CLIENT	M.J.A.	L.D.C.
A	11/23/88	ISSUED FOR INTERNAL REVIEW	M.J.A.	L.D.C.

SCALE:

International WasteEnergy Systems
ST. LOUIS, MO.

PROJECT
FLORIDA FIRST
PROCESSING, INC.

TITLE
ORGANIC TREATMENT
BULK PUMPABLE UNLOADING &
CONTAINERIZED WASTE HANDLING
FLOWSHEET

DRAWN	DATE	APPD	DATE	DRAWING NO.	REV.
M.J.A.	11/22/88	PSL	6/1/90	8813-00-F-011	G
CHKD	DATE		DATE		

8813F011

G-2

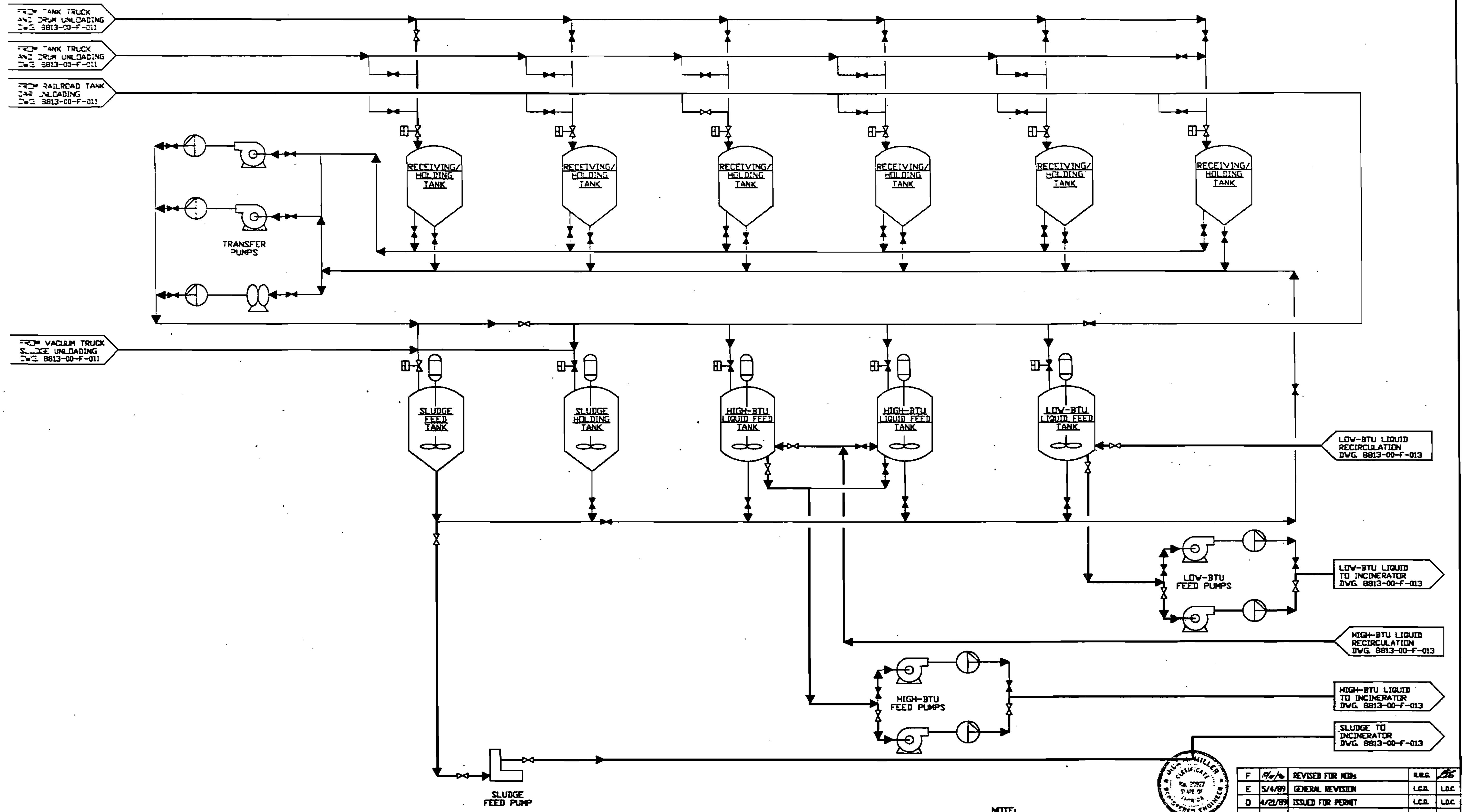

NOTE:
ALL TANKS VENT TO THE
EMISSION CONTROL SYSTEM
DWG. 8813-00-F-016

No. 22927
STATE OF FLORIDA

[illegible] equipment or material procurement, construction or any other purpose.

REV.	DATE	REVISION	BY	CHKD
F	10/1/90	REVISED FOR NODs	R.W.G.	
E	5/4/89	GENERAL REVISION	L.C.D.	L.D.C.
D	4/21/89	ISSUED FOR PERMIT	L.C.D.	L.D.C.
C	01/12/89	GENERAL REVISIONS	L.C.D.	L.D.C.
B	12/12/88	ISSUED FOR CLIENT	M.J.A.	L.D.C.
A	12/05/88	ISSUED FOR INTERNAL REVIEW	M.J.A.	L.D.C.

PROJECT
FLORIDA FIRST
PROCESSING, INC.

SCALE:

International
WasteEnergy
Systems
ST. LOUIS, MO.

TITLE
ORGANIC TREATMENT
PUMPABLE WASTE STORAGE
FLOWSHEET

DRAWN	DATE	APP'D	DATE	DRAWING NO.	REV.
M.J.A.	11/30/88	P.J.K.	10/1/90	8813-00-F-012	F
CHKD	DATE		DATE		

8813F012

F-1

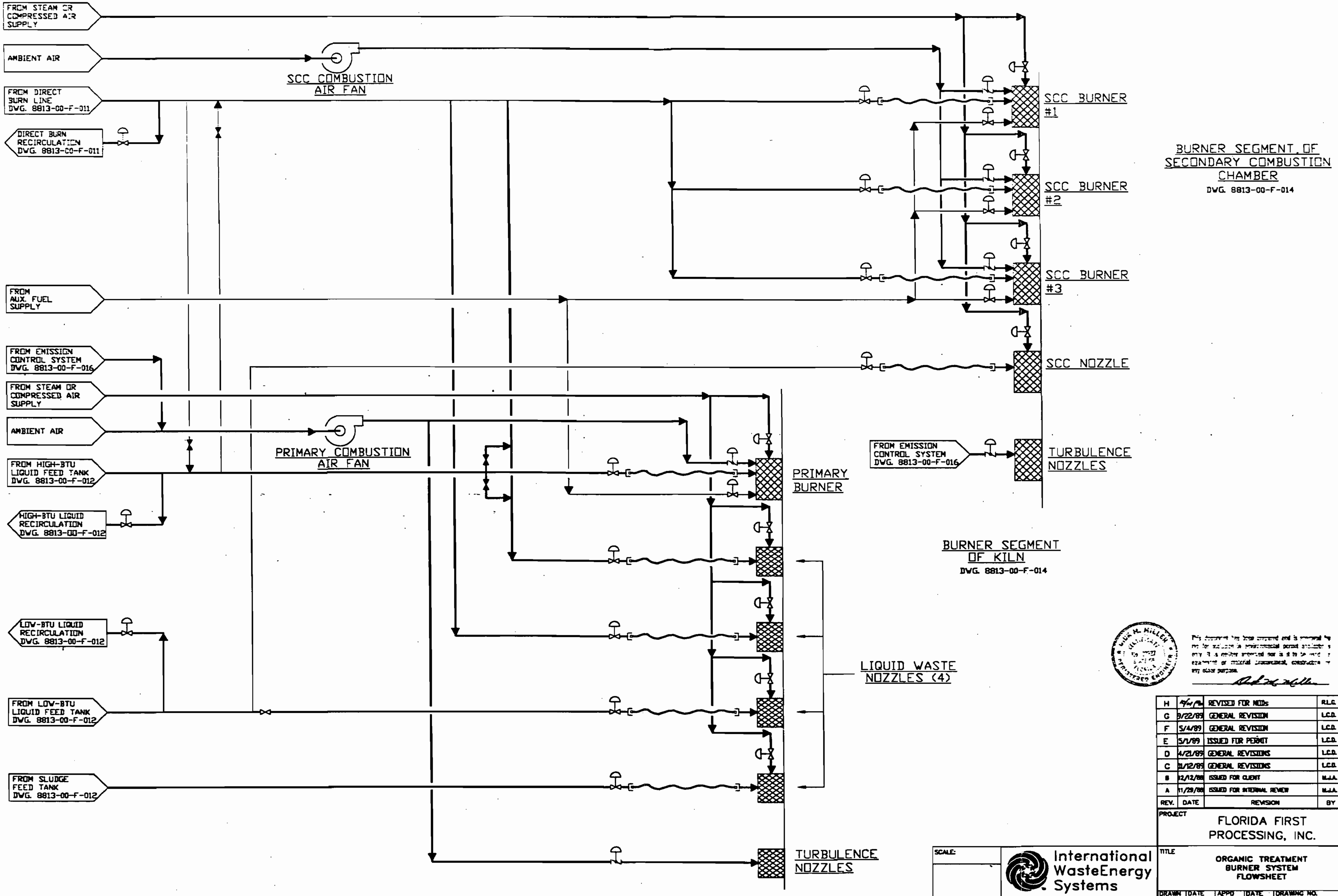

This document has been prepared and is approved by me for inclusion in environmental permit application only. It is neither intended nor is it to be used for equipment or material procurement, construction or any other purpose.

REV.	DATE	REVISION	BY	CHKD
H	[illegible]	REVISED FOR NODs	R.L.C.	[illegible]
G	9/22/89	GENERAL REVISION	L.C.D.	L.D.C.
F	5/4/89	GENERAL REVISION	L.C.D.	L.D.C.
E	5/1/89	ISSUED FOR PERMIT	L.C.D.	L.D.C.
D	4/21/89	GENERAL REVISIONS	L.C.D.	L.D.C.
C	01/12/89	GENERAL REVISIONS	L.C.D.	L.D.C.
B	12/12/88	ISSUED FOR CLIENT	M.J.A.	L.D.C.
A	11/29/88	ISSUED FOR INTERNAL REVIEW	M.J.A.	L.D.C.

PROJECT
FLORIDA FIRST
PROCESSING, INC.

SCALE:

International
WasteEnergy
Systems
ST. LOUIS, MO.

TITLE
ORGANIC TREATMENT
BURNER SYSTEM
FLOWSHEET

DRAWN	DATE	APPD	DATE	DRAWING NO.	REV.
M.J.A.	11/29/88	F.S.K.	10/1/96	8813-00-F-013	H
CHKD	DATE		DATE		

8813F013

H-1

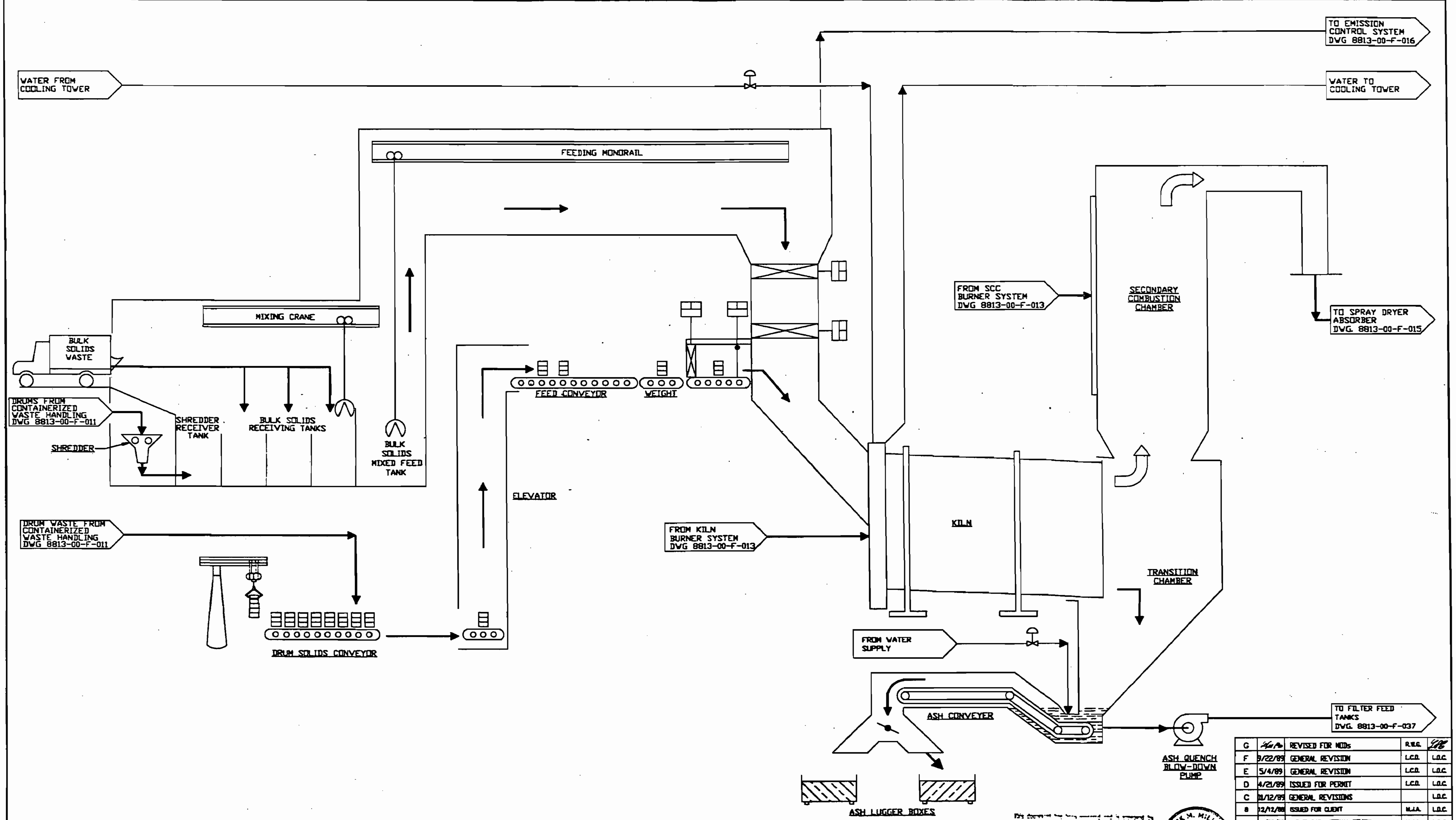

REV.	DATE	REVISION	BY	CHKD
G	[illegible]	REVISED FOR NODs	R.W.G.	[illegible]
F	9/22/89	GENERAL REVISION	L.C.D.	L.D.C.
E	5/4/89	GENERAL REVISION	L.C.D.	L.D.C.
D	4/21/89	ISSUED FOR PERMIT	L.C.D.	L.D.C.
C	01/12/89	GENERAL REVISIONS		L.D.C.
B	12/12/88	ISSUED FOR CLIENT	M.J.A.	L.D.C.
A	11/23/88	ISSUED FOR INTERNAL REVIEW	M.J.A.	L.D.C.

This document [illegible] equipment or material procurement, construction or any other purpose.

DICK M. MILLER

PROJECT
FLORIDA FIRST
PROCESSING, INC.

SCALE:

International
WasteEnergy
Systems
ST. LOUIS, MO.

TITLE
ORGANIC TREATMENT
THERMAL PROCESSING
FLOWSHEET

DRAWN	DATE	APPD	DATE	DRAWING NO.	REV.
M.J.A.	11/22/88	PJK.	10/1/90	8813-00-F-014	G
CHKD	DATE		DATE		

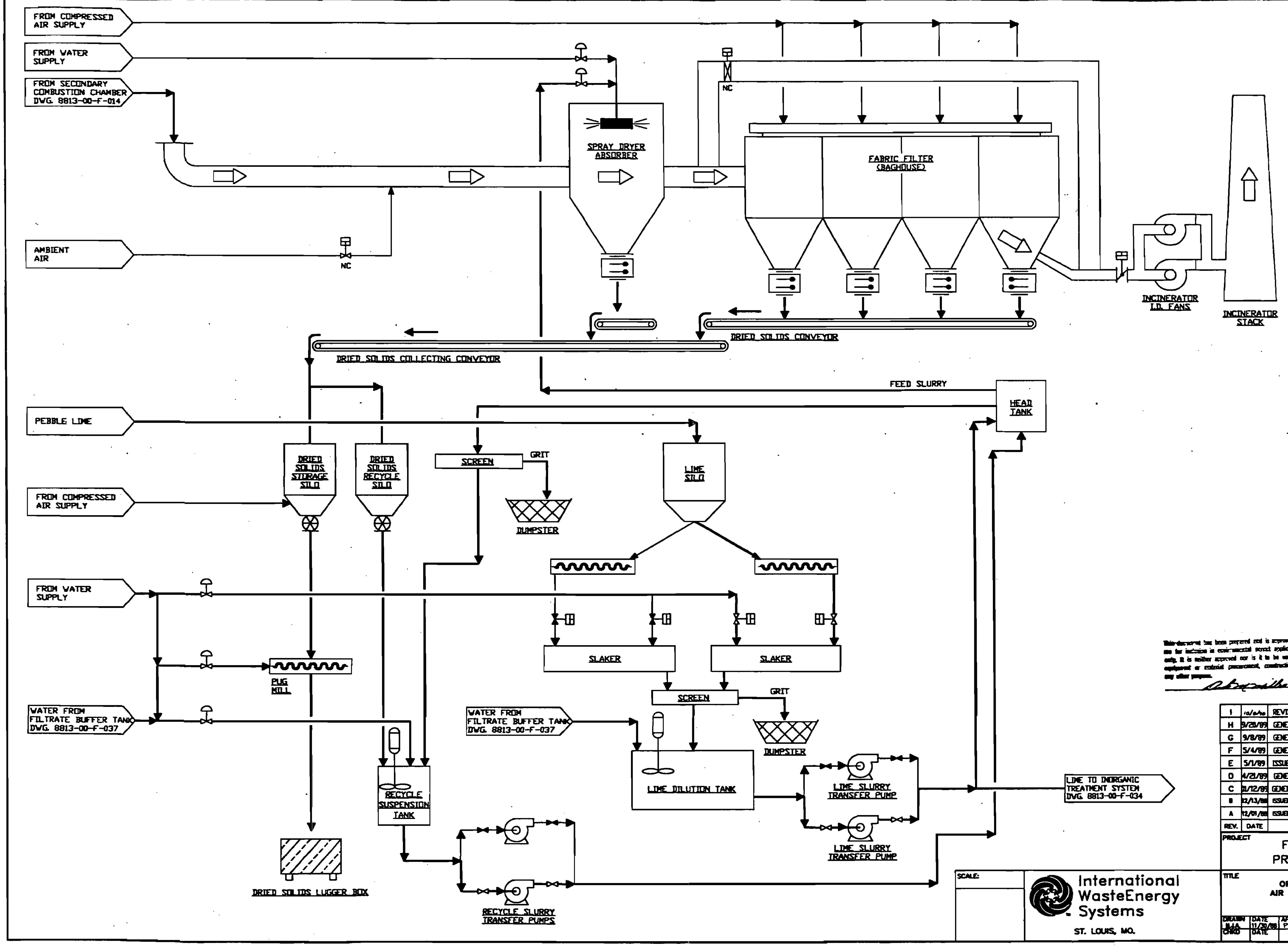

This document has been prepared and is approved by me for inclusion in environmental permit applications only. It is neither approved nor is it to be used for equipment or material procurement, construction or any other purpose.

DICK M. MILLER
No. 20927

I	10/3/90	REVISED FOR NODs	R.W.G.	
H	9/20/89	GENERAL REVISION	R.L.M.	L.D.C.
G	9/8/89	GENERAL REVISION	L.C.R.	L.D.C.
F	5/4/89	GENERAL REVISION	L.C.R.	L.D.C.
E	5/1/89	ISSUED FOR PERMIT	LCD	L.D.C.
D	4/21/89	GENERAL REVISION	LCD	L.D.C.
C	01/12/89	GENERAL REVISIONS		L.D.C.
B	12/13/88	ISSUED FOR CLIENT	RLM	L.D.C.
A	12/01/88	ISSUED FOR INTERNAL REVIEW	M.J.A.	L.D.C.
REV.	DATE	REVISION	BY	CHKD

SCALE:

International WasteEnergy Systems
ST. LOUIS, MO.

PROJECT
FLORIDA FIRST
PROCESSING, INC.

TITLE
ORGANIC TREATMENT
AIR POLLUTION CONTROL
FLOWSHEET

DRAWN	DATE	APPD	DATE	DRAWING NO.	REV.
M.J.A.	11/30/88	P.J.K.	10/3/90	8813-00-F-015	I
CHKD	DATE		DATE		

10/03/90

8813F015

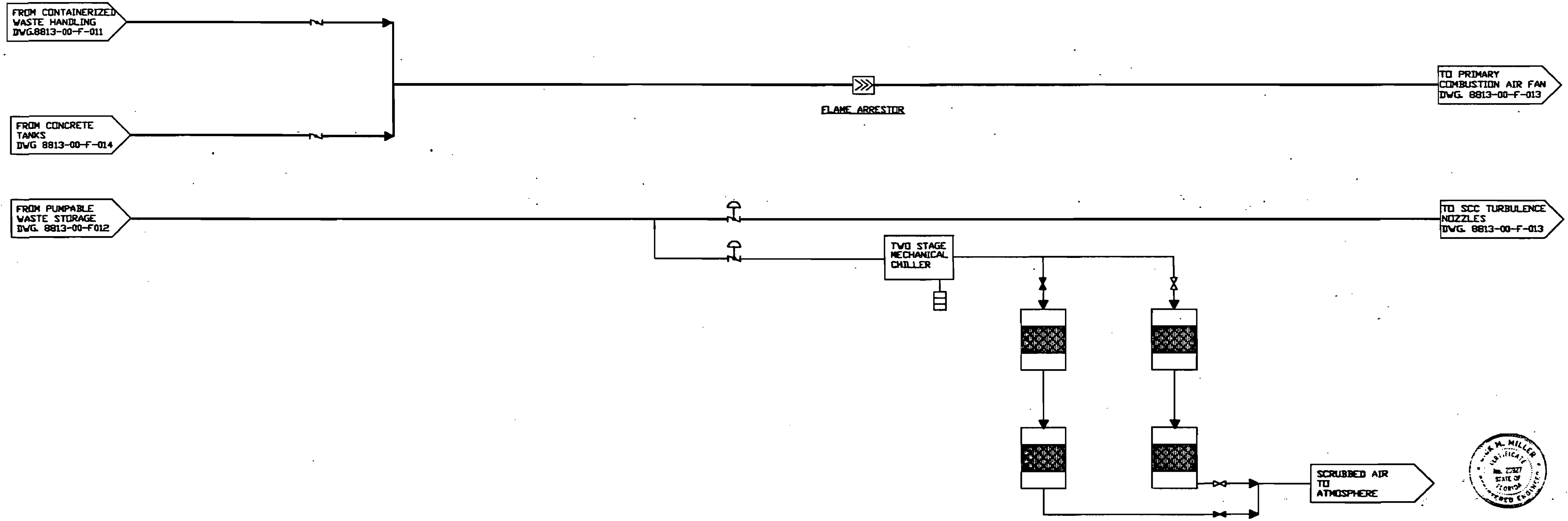

CARBON ADSORBERS

This [illegible] has been [illegible] and is approved by me for inclusion in environmental permit applications only. It is neither intended nor is it to be used for equipment or material procurement, construction or any other purpose.

REV.	DATE	REVISION	BY	CHKD
H	6/01/9	REVISED FOR NODs	R.W.G.	
G	9/22/89	GENERAL REVISION	L.C.D.	L.D.C.
F	5/4/89	GENERAL REVISION	L.C.D.	L.D.C.
D	4/21/89	ISSUED FOR PERMIT	L.C.D.	L.D.C.
C	1/12/89	GENERAL REVISIONS	L.C.D.	L.D.C.
B	12/12/88	ISSUED FOR CLIENT	M.J.A.	L.D.C.
A	11/29/88	ISSUED FOR INTERNAL REVIEW	M.J.A.	L.D.C.

PROJECT

FLORIDA FIRST
PROCESSING, INC.

SCALE:

International
WasteEnergy
Systems

ST. LOUIS, MO.

TITLE

ORGANIC TREATMENT
EMISSION CONTROL SYSTEM
FLOWSHEET

DRAWN	DATE	APPD	DATE	DRAWING NO.	REV.
M.J.A.	11/29/88	C.J.K.	10/1/90		
CHKD	DATE		DATE	8813-00-F-016	H

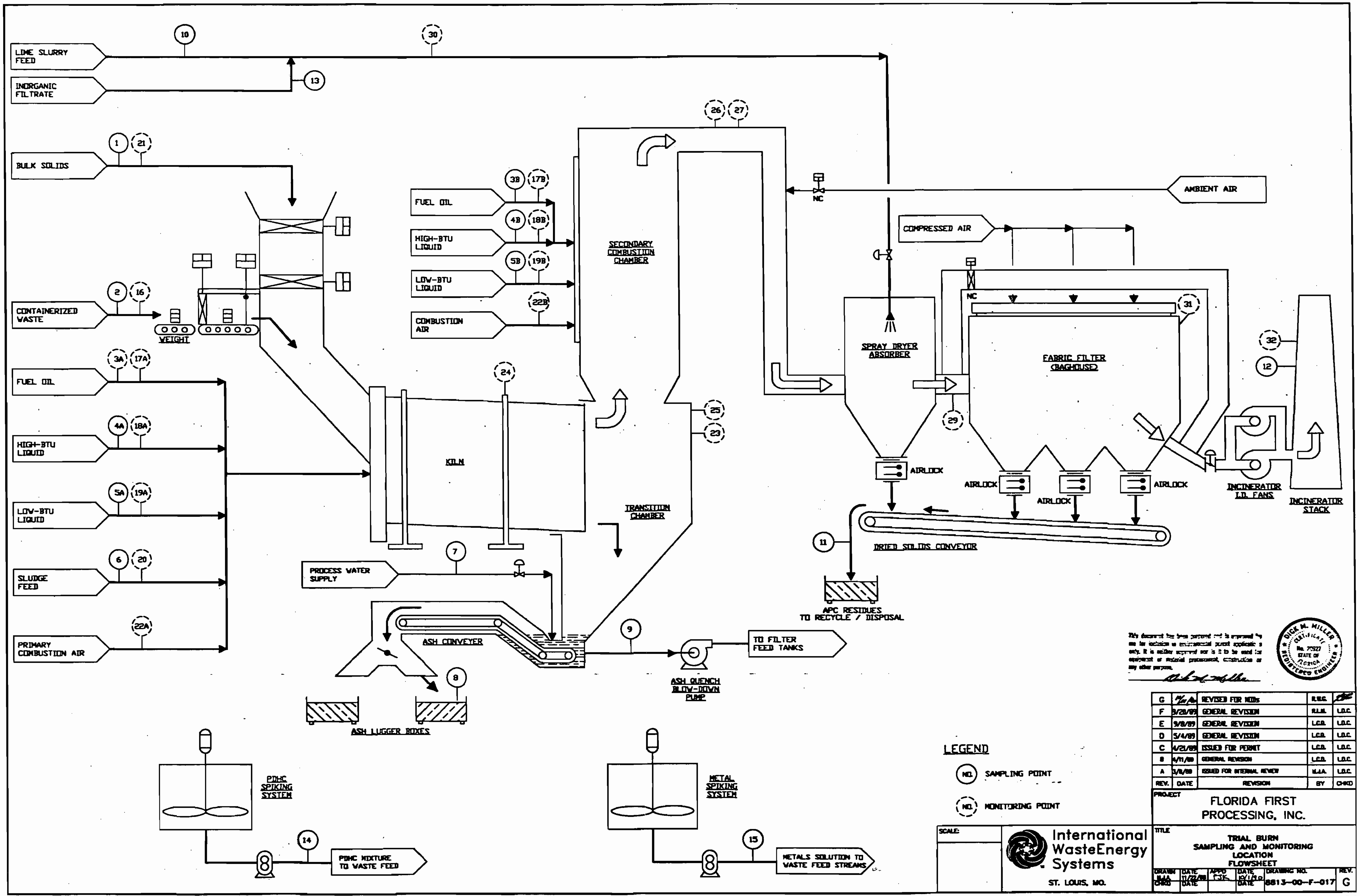

This document has been prepared and is approved by me for inclusion in environmental permit application only. It is neither approved nor is it to be used for equipment or material procurement, construction or any other purpose.

DICK M. MILLER
No. 75927
STATE OF FLORIDA

REV.	DATE	REVISION	BY	CHKD
G		REVISED FOR NODs	R.W.G.	
F	9/28/89	GENERAL REVISION	R.L.M.	L.D.C.
E	9/8/89	GENERAL REVISION	L.C.D.	L.D.C.
D	5/4/89	GENERAL REVISION	L.C.D.	L.D.C.
C	4/21/89	ISSUED FOR PERMIT	L.C.D.	L.D.C.
B	4/11/89	GENERAL REVISION	L.C.D.	L.D.C.
A	3/8/89	ISSUED FOR INTERNAL REVIEW	M.J.A.	L.D.C.

PROJECT
FLORIDA FIRST PROCESSING, INC.

SCALE:

International WasteEnergy Systems
ST. LOUIS, MO.

TITLE
TRIAL BURN
SAMPLING AND MONITORING
LOCATION
FLOWSHEET

DRAWN	DATE	APPD	DATE	DRAWING NO.	REV.
M.J.A.	11/22/88	CJK	10/1/90	8813-00-F-017	G
CHKD	DATE		DATE		

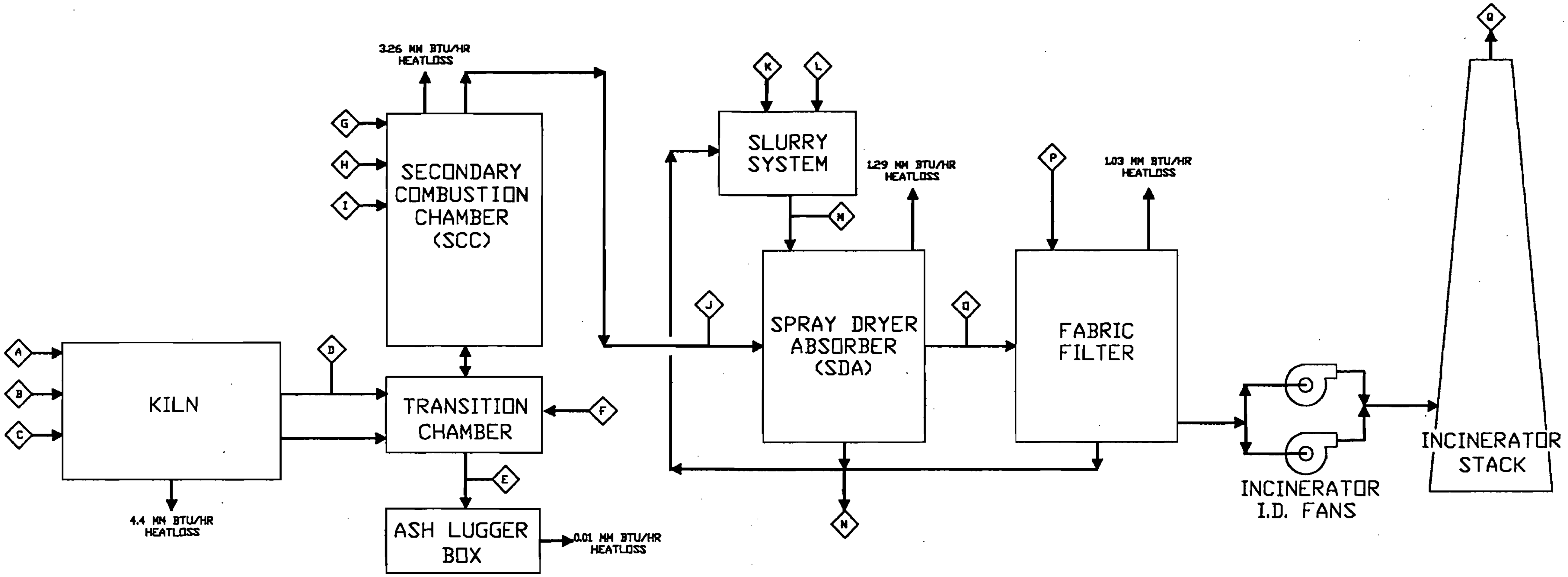

	▼A	▼B	▼C	D	▲E	▼F	▼G	▼H	▼I	J	▼K	▼L	M	▲N	O	▼P	▲Q
	KILN WASTE	KILN AUX.FUEL	KILN COMB.AIR	KILN GAS	ASH OUT	ASH QUNECH	SCC WASTE	SCC AUX.FUEL	SCC COMB.AIR	SDA INLET	SDA WATER	SDA LIME	SDA LIME SLURRY	SOLIDS OUT	SDA OUTLET	LEAKAGE & PULSE AIR	STACK EXIT
OTHER	7,677		95,646	99,050			226	53	14,800	113,863					113,863	20,706	134,569
CHLORINE	657						27										
SULFUR							0										
WATER	1,166		1,339	6,836	19	810	241		207	8,351	41,080		40,646	137	49,204		49,204
ASH	252			63	189		6			69		81	81	146	52		4
HCL				675						703					7		7
SO2																	
Ca(OH)2												1,351	1,785	1,078	809		
SALTS														1,059	794		
TOTAL,LB/HR	9,750	0	96,985	106,624	208	810	500	53	15,007	122,986	41,080	1,432	42,512	2,421	164,729	20,706	183,784
MM BTU/HR	71.98	0.00	1.66	69.21	0.01	0.01	2.16	1.00	0.22	69.33	0.41	0.00	0.41	0.16	68.29	0.05	67.29
BTU/LB	7,383	18,993					4,312	18,993									
GPM/ACFM			21,845	115,140		2			3,316	118,503	82		102		66,009	4,625	70,851
TEMP,DEG	70	70	70	2100	212	70	70	70	60	1810	70	70	70	370	370	70	343

NOTES:

1) THIS BALANCE REPRESENTS ONE POSSIBLE PROCESSING SCENARIO FOR THE VARIOUS WASTE STREAMS. THERE ARE MANY OTHER POSSIBLE PROCESSING COMBINATIONS INCLUDING "CAMPAIGN" OPERATIONS WITH ONE OR MORE PARTICULAR WASTES. THIS CASE REPRESENTS A TYPICAL AVERAGE LOAD.

2) LIME IN STREAM "L" REPORTED AS CaO.

3) ▼ INPUT, ▲ OUTPUT.

DICK M. MILLER
No. 20927

This document has been prepared and is approved by me for inclusion in environmental permit applications only. It is neither approved nor is it to be used for equipment or material procurement, construction or any other purpose.

REV.	DATE	REVISION	BY	CHKD
E	[illegible]	GENERAL REVISION	R.L.M.	L.D.C.
D	[illegible]	GENERAL REVISION	R.L.M.	L.D.C.
C	[illegible]	GENERAL REVISION	M.K.	L.D.C.
B	[illegible]	GENERAL REVISION	L.C.D.	L.D.C.
A	04/21/89	ISSUED FOR PERMIT	P.A.B.	L.D.C.

10/01/90

PROJECT
FLORIDA FIRST
PROCESSING, INC.

SCALE: NONE

International
WasteEnergy
Systems
ST. LOUIS, MO.

TITLE
HEAT AND MATERIAL BALANCE
TRIAL BURN TEST #3

DRAWN	DATE	APPD	DATE	DRAWING NO.	REV.
T.E.R.	4/21/89			8813-00-F-018	E
CHKD	DATE		DATE		

/CAD/8813/pfds/8813F018

E-2

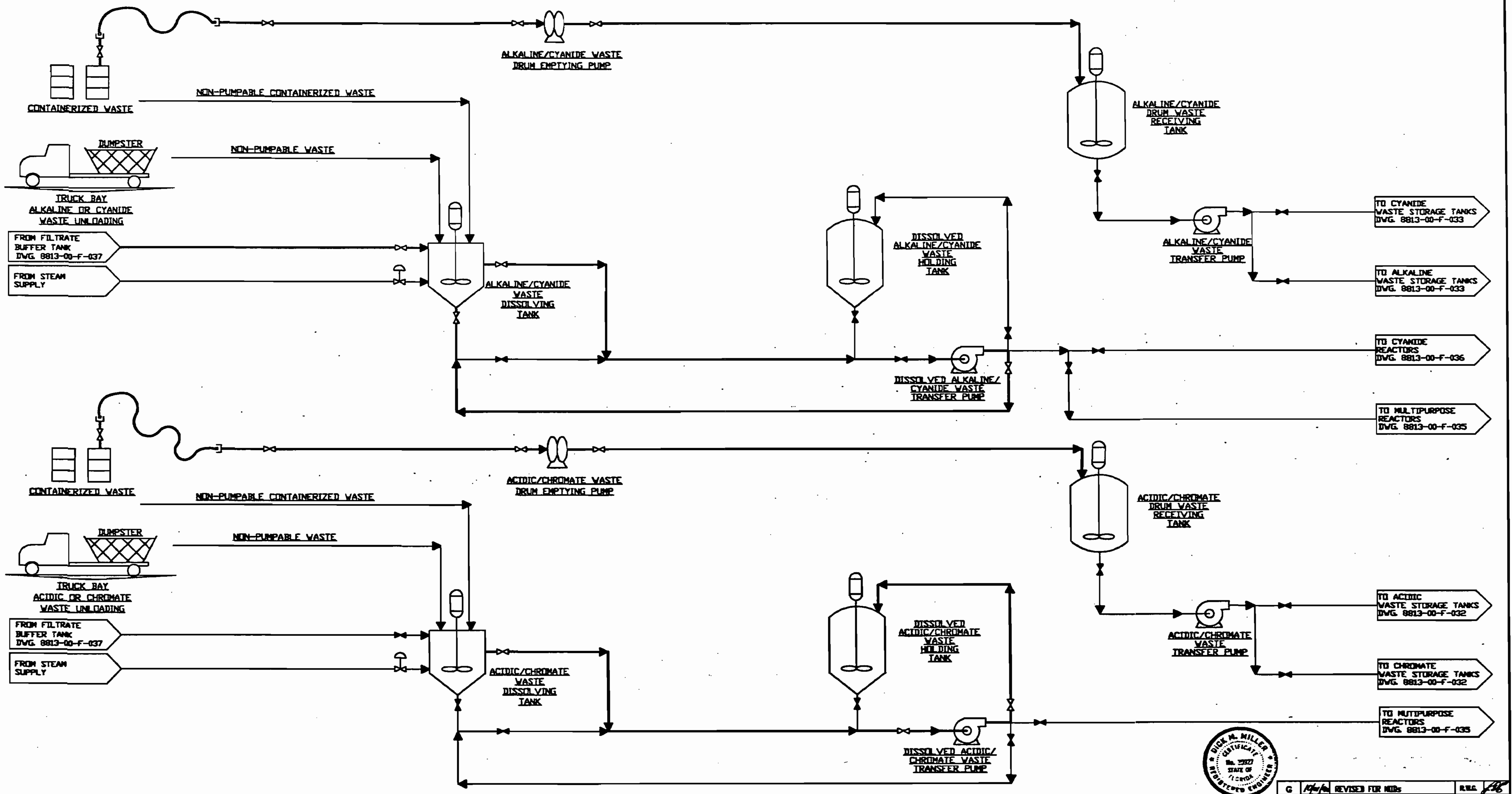

DICK M. MILLER

This document has been prepared and is reviewed by me for inclusion in environmental permit applications only. It is neither approved nor is it to be used for equipment or material procurement, construction or any other purpose.

NOTE:
ALL TANKS, VESSELS AND THE WASTE HANDLING SYSTEM VENT TO THE INORGANIC EMISSION CONTROL SYSTEM.
DWG. 8813-00-F-038

REV.	DATE	REVISION	BY	CHKD
G	10/2/90	REVISED FOR NODs	R.W.C.	
F	[illegible]	GENERAL REVISION	L.C.B.	
E	[illegible]	ISSUED FOR PERMIT	L.C.B.	
D	[illegible]	GENERAL REVISIONS		
C	[illegible]	GENERAL REVISIONS		
B	12/13/[illegible]	ISSUED FOR CLIENT	M.J.A.	
A	12/05/[illegible]	ISSUED FOR INTERNAL REVIEW	M.J.A.	

PROJECT
FLORIDA FIRST
PROCESSING, INC.

SCALE:

International
WasteEnergy
Systems
ST. LOUIS, MO.

TITLE
INORGANIC TREATMENT
CONTAINERIZED WASTE HANDLING
FLOWSHEET

DRAWN	DATE	APPD	DATE	DRAWING NO.	REV.
M.J.A.	12/02/88	T.J.	10/3/90	8813-00-F-030	G
CHKD	DATE		DATE		

10/02/90

CAD\8813\PFDS\8813F030

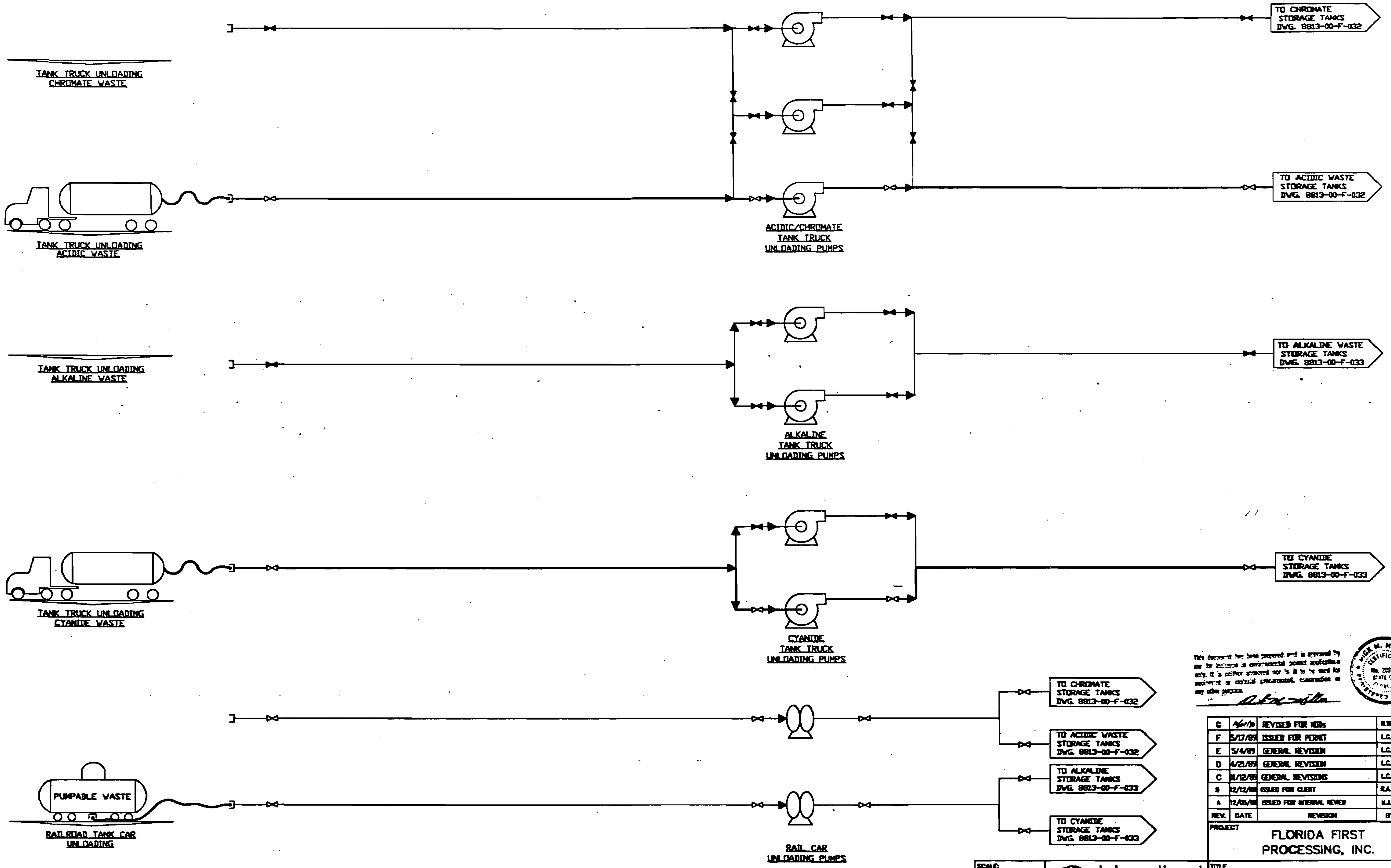

This document has been prepared and is approved for use for inclusion in environmental permit applications only. It is neither approved nor is it to be used for equipment or material procurement, construction or any other purpose.

No. 20977
STATE OF FLORIDA

REV.	DATE	REVISION	BY	CHKD
G	[illegible]	REVISED FOR NODs	R.W.G.	
F	5/17/89	ISSUED FOR PERMIT	L.C.B.	L.D.C.
E	5/4/89	GENERAL REVISION	L.C.B.	L.D.C.
D	4/21/89	GENERAL REVISION	L.C.B.	L.D.C.
C	1/12/89	GENERAL REVISIONS	L.C.B.	L.D.C.
B	12/12/88	ISSUED FOR CLIENT	R.A.S.	L.D.C.
A	12/05/88	ISSUED FOR INTERNAL REVIEW	M.J.A.	L.D.C.

PROJECT
FLORIDA FIRST
PROCESSING, INC.

SCALE:

International
WasteEnergy
Systems
ST. LOUIS, MO.

TITLE
INORGANIC TREATMENT
BULK PUMPABLES HANDLING
FLOWSHEET

DRAWN	DATE	APPD	DATE	DRAWING NO.	REV.
M.J.A.	12/02/88	F.S.K.	10/1/90	8813-00-F-031	G
CHKD	DATE		DATE		

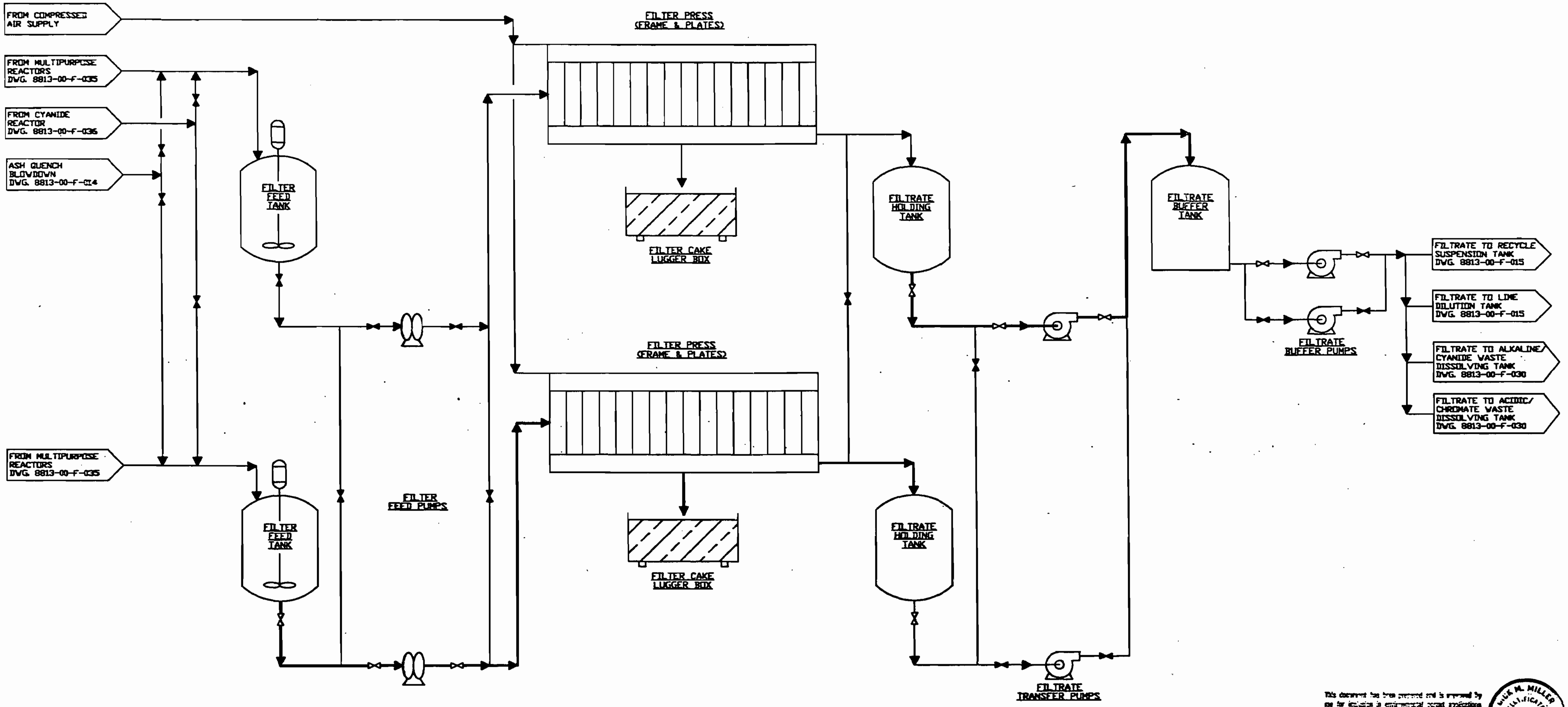

This document has been prepared and is approved by me for inclusion in environmental permit applications only. It is neither approved nor is it to be used for equipment or material procurement, construction or any other purpose.

RICK M. MILLER
No. 20927

NOTE:
TANKS AND FRAME AND PLATE FILTER PRESSES VENT TO THE EMISSION CONTROL SYSTEM. DWG. 8813-00-F-038

REV.	DATE	REVISION	BY	CHKD
G	10/3/90	REVISED FOR NODs	P.A.	
F	5/4/89	GENERAL REVISION	L.C.B.	
E	5/1/89	ISSUED FOR PERMIT	L.C.B.	
D	4/21/89	GENERAL REVISIONS	L.C.B.	
C	01/12/89	GENERAL REVISIONS		
B	12/13/88	ISSUED FOR CLIENT	M.J.A.	
A	12/05/88	ISSUED FOR INTERNAL REVIEW	M.J.A.	

10/03/90

PROJECT
FLORIDA FIRST
PROCESSING, INC.

SCALE:

International
WasteEnergy
Systems
ST. LOUIS, MO.

TITLE
INORGANIC TREATMENT
SLUDGE DEWATERING
FLOWSHEET

DRAWN	DATE	APPD	DATE	DRAWING NO.	REV.
M.J.A.	12/05/88	P.S.K.	10/3/90	8813-00-F-037	G
CHKD	DATE		DATE		

8813F037

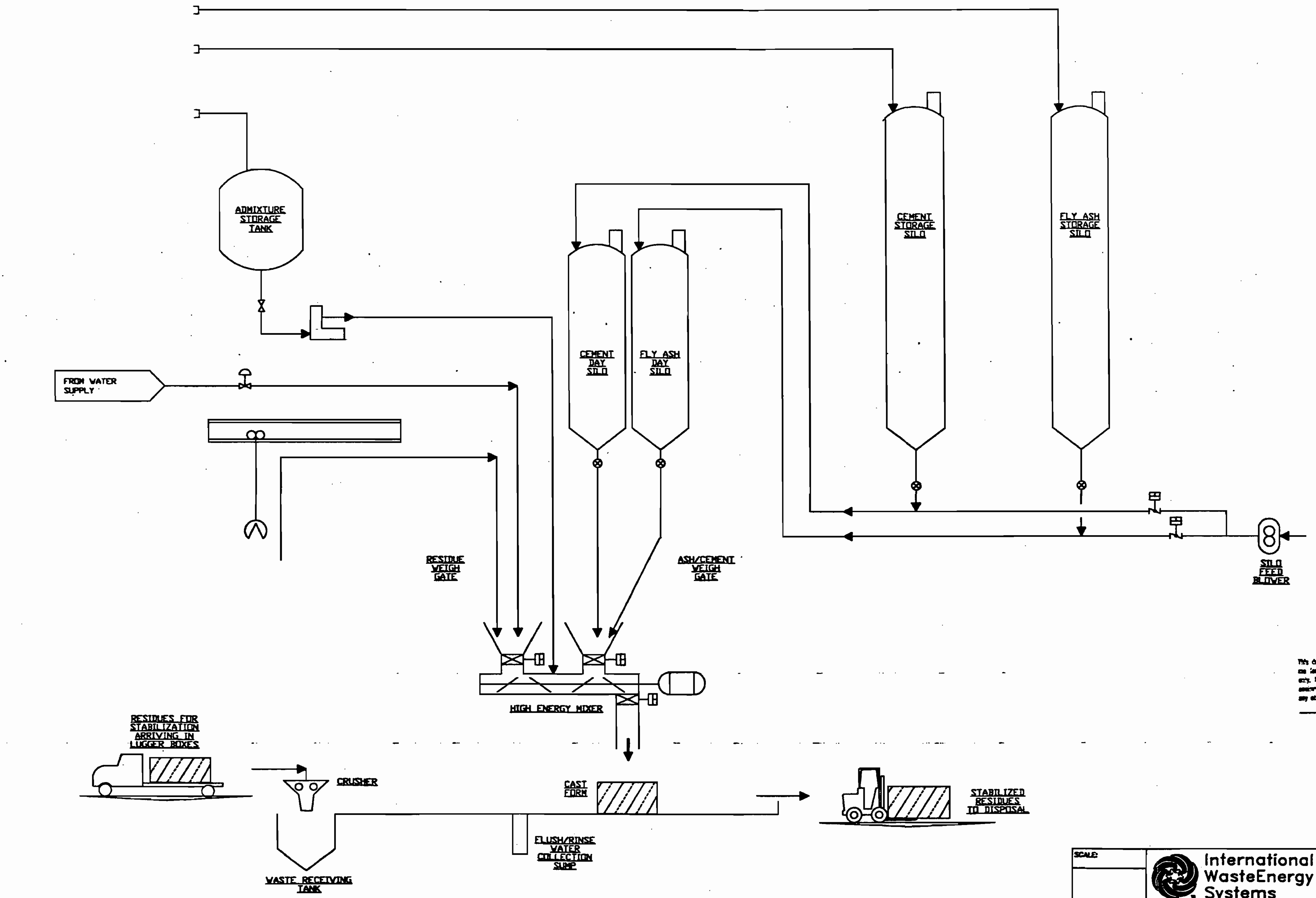

This document has been prepared and is presented by me for inclusion in environmental permit applications only. It is neither approved nor is it to be used for procurement of material processes, construction or any other purpose.

NICK M. MILLER
No. 23527
STATE OF FLORIDA

E	4/6/90	REVISED FOR NODs	R.W.G.	
D	5/4/89	GENERAL REVISION	L.C.D.	L.D.C.
C	5/1/89	ISSUED FOR PERMIT	L.C.D.	L.D.C.
B	4/21/89	GENERAL REVISION	M.K.	L.D.C.
A	3/9/89	ISSUED FOR INTERNAL REVIEW	M.K.	L.D.C.
REV.	DATE	REVISION	BY	CHKD

PROJECT
FLORIDA FIRST
PROCESSING, INC.

SCALE:

International
WasteEnergy
Systems
ST. LOUIS, MO.

TITLE
STABILIZATION
FLOWSHEET

DRAWN	DATE	APPD	DATE	DRAWING NO.	REV.
M.K.	3/7/89	F.J.K.	10/1/90	8813-00-F-039	E
CHKD	DATE		DATE		

8813F039

E-1

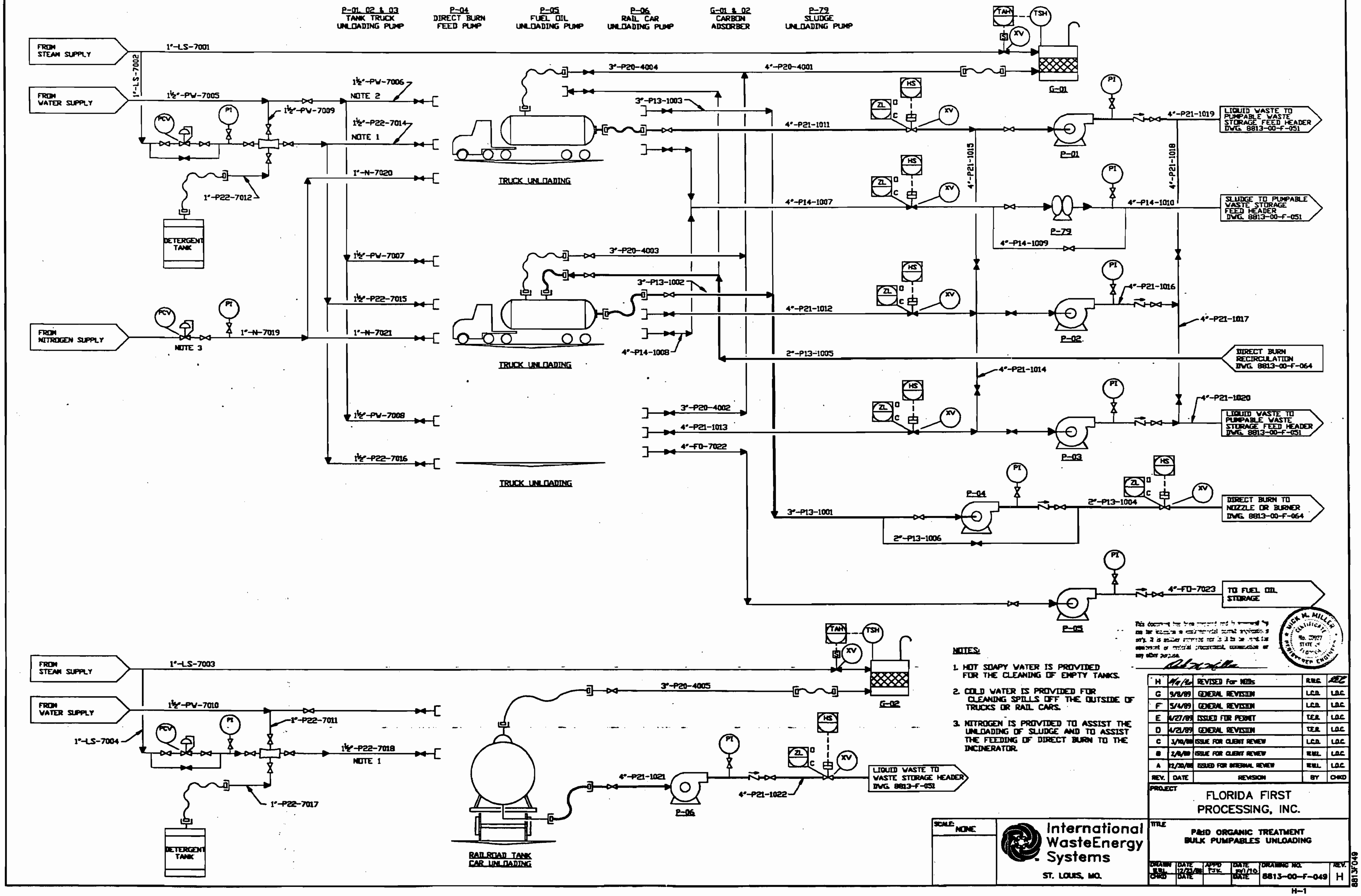

NOTES:

1. HOT SOAPY WATER IS PROVIDED FOR THE CLEANING OF EMPTY TANKS.
2. COLD WATER IS PROVIDED FOR CLEANING SPILLS OFF THE OUTSIDE OF TRUCKS OR RAIL CARS.
3. NITROGEN IS PROVIDED TO ASSIST THE UNLOADING OF SLUDGE AND TO ASSIST THE FEEDING OF DIRECT BURN TO THE INCINERATOR.

This document has been prepared and is [illegible] for use for [illegible] a [illegible] permit application only. It is neither approved nor is it to be used for equipment or material procurement, construction or any other purpose.

NICK M. MILLER
No. 20927

REV.	DATE	REVISION	BY	CHKD
H	4/4/10	REVISED For NOBs	RWG	[illegible]
G	9/8/89	GENERAL REVISION	LCD	LOC
F	5/4/89	GENERAL REVISION	LCD	LOC
E	4/27/89	ISSUED FOR PERMIT	TER	LOC
D	4/21/89	GENERAL REVISION	TER	LOC
C	3/10/88	ISSUE FOR CLIENT REVIEW	LCD	LOC
B	2/8/88	ISSUE FOR CLIENT REVIEW	RWL	LOC
A	12/30/88	ISSUED FOR INTERNAL REVIEW	RWL	LOC

PROJECT
FLORIDA FIRST
PROCESSING, INC.

SCALE: NONE

International
WasteEnergy
Systems
ST. LOUIS, MO.

TITLE
P&ID ORGANIC TREATMENT
BULK PUMPABLES UNLOADING

DRAWN	DATE	APPD	DATE	DRAWING NO.	REV.
RWL	12/23/88	PJK	10/1/10	8813-00-F-049	H
CHKD	DATE		DATE		

H-1

8813F049

G-37	G-38	G-35	G-36	C-01	C-02	C-03	C-04	P-07	A-01	T-09	P-08	E-06
DRUMMED LIQUIDS JIB CRANE	DRUMMED SOLIDS JIB CRANE	DRUM/PALLET HOIST	DRUM SPLITTING JIB CRANE	DRUMMED LIQUIDS CONVEYOR	DRUMMED SOLIDS CONVEYOR	DRUMMED SOLIDS TRANSFER CONVEYOR	DRUM ELEVATOR	DRUM EMPTYING PUMP	DRUMMED PUMPABLE WASTE RECEIVER AGITATOR	DRUMMED PUMPABLE WASTE RECEIVER	DRUMMED PUMPABLE WASTE TRANSFER PUMP	TANK PLATE COIL

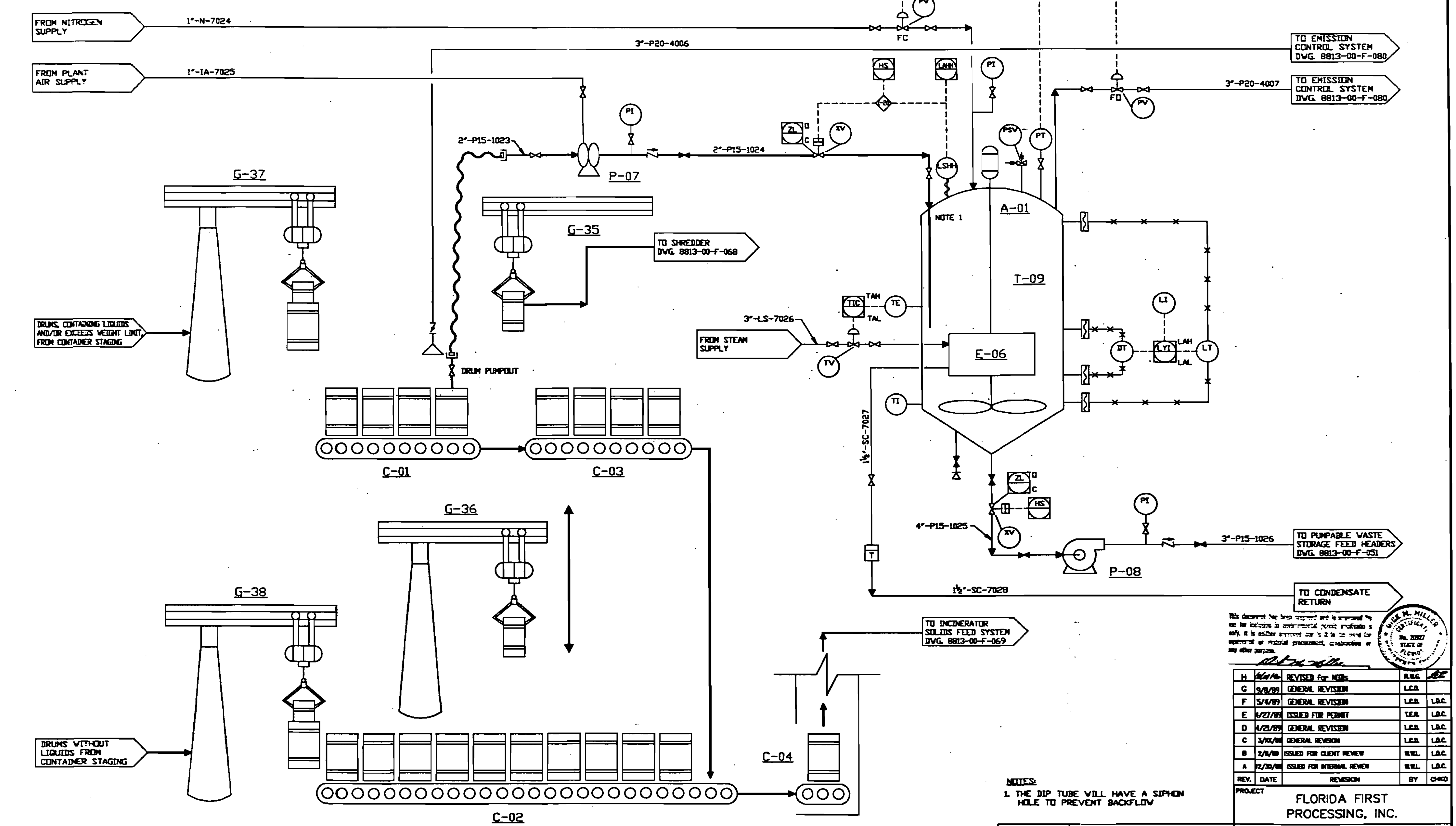

NOTES:
1. THE DIP TUBE WILL HAVE A SIPHON HOLE TO PREVENT BACKFLOW

This document has been prepared and is approved for use for inclusion in environmental permit application only. It is neither approved nor is it to be used for equipment or material procurement, construction or any other purpose.

No. 20827

H		REVISED for NODs	R.W.C.	
G	9/8/89	GENERAL REVISION	L.C.D.	
F	5/4/89	GENERAL REVISION	L.C.D.	L.D.C.
E	4/27/89	ISSUED FOR PERMIT	T.E.R.	L.D.C.
D	4/21/89	GENERAL REVISION	L.C.D.	L.D.C.
C	3/10/88	GENERAL REVISION	L.C.D.	L.D.C.
B	2/8/88	ISSUED FOR CLIENT REVIEW	W.W.L.	L.D.C.
A	12/30/88	ISSUED FOR INTERNAL REVIEW	W.W.L.	L.D.C.
REV.	DATE	REVISION	BY	CHKD

PROJECT
FLORIDA FIRST
PROCESSING, INC.

SCALE: NONE

International
WasteEnergy
Systems
ST. LOUIS, MO.

TITLE
P&ID ORGANIC TREATMENT
CONTAINERIZED WASTE HANDLING

DRAWN	DATE	APPD	DATE	DRAWING NO.	REV.
W.W.L.	12/27/88	PJE	10/1/90	8813-00-F-050	H
CHKD	DATE		DATE		

8813F050

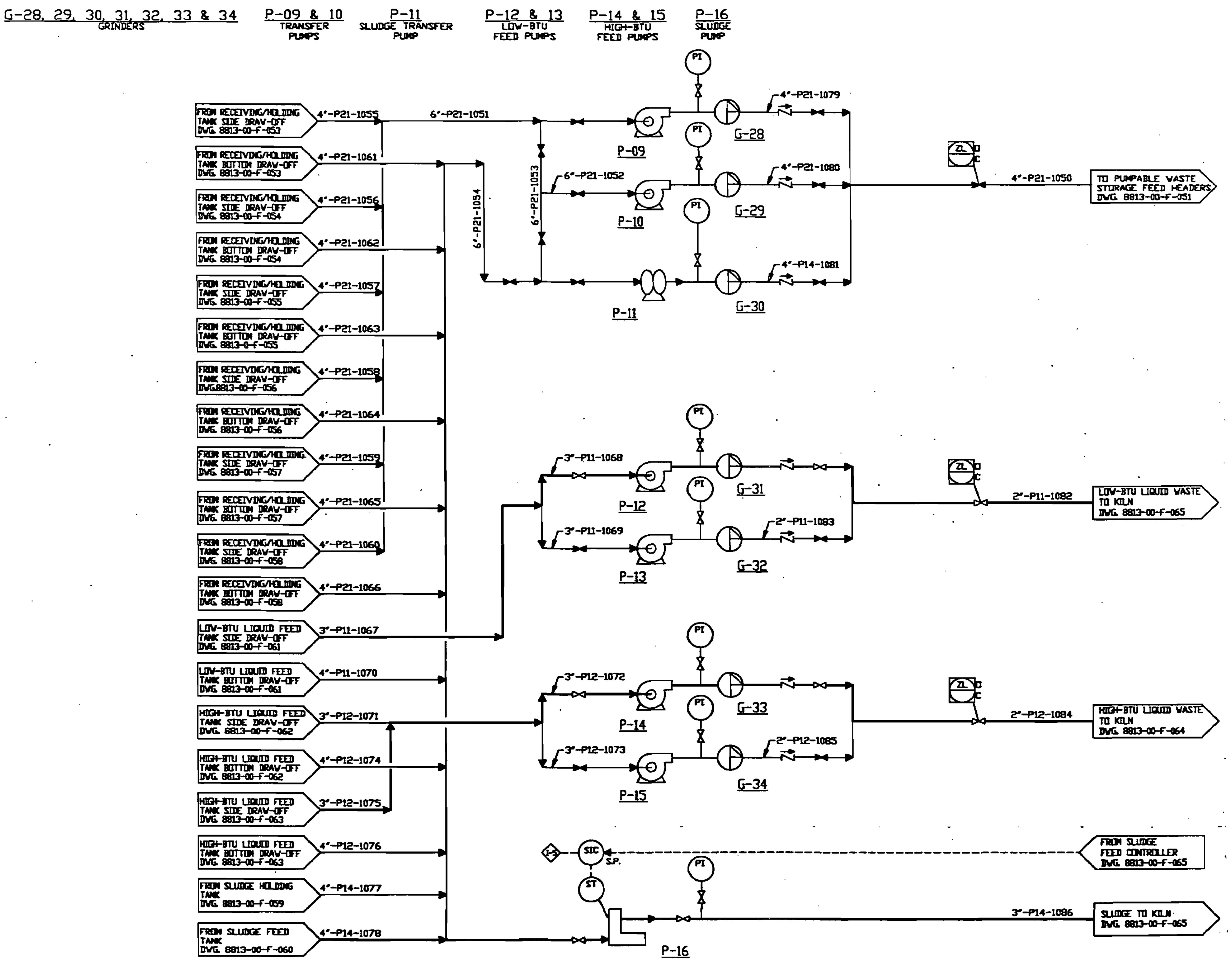

This document has been reviewed and is approved by me for inclusion in this permit application only. It is neither approved nor is it to be used for equipment or material procurement, construction or any other purpose.

NICK M. MILLER
No. [illegible]
STATE OF FLORIDA
REGISTERED

REV.	DATE	REVISION	BY	CHKD
G	[illegible]	REVISED for NODs	R.W.C.	[illegible]
F	9/8/89	GENERAL REVISION	L.C.D.	
E	4/27/89	ISSUED FOR PERMIT	T.E.R.	L.D.C.
D	4/21/89	GENERAL REVISION	L.C.D.	L.D.C.
C	3/31/89	GENERAL REVISION	W.W.L.	L.D.C.
B	2/8/89	ISSUED FOR CLIENT REVIEW	W.W.L.	L.D.C.
A	12/30/88	ISSUED FOR INTERNAL REVIEW	W.A.M.	L.D.C.

SCALE: NONE

International WasteEnergy Systems
ST. LOUIS, MO.

PROJECT
FLORIDA FIRST
PROCESSING, INC.

TITLE
P&ID ORGANIC TREATMENT
PUMPABLE WASTE STORAGE
EMPTYING HEADERS

DRAWN	DATE	APPD	DATE	DRAWING NO.	REV.
W.A.M.	12/30/88	P.J.L.	10/1/90	8813-00-F-052	G
CHKD	DATE		DATE		

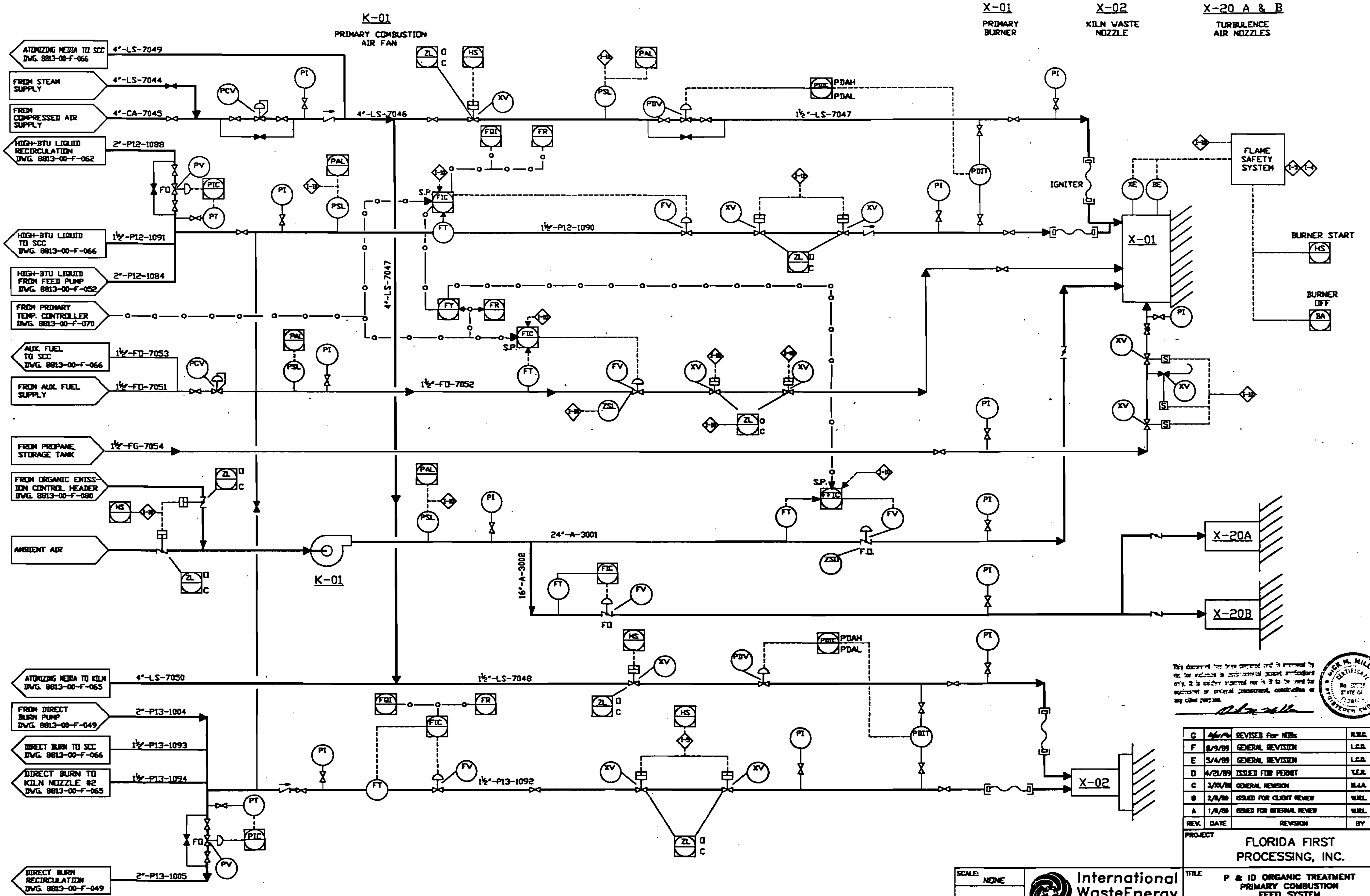

This document has been prepared and is reviewed by me for inclusion in environmental permit applications only. It is neither approved nor is it to be used for equipment or material procurement, construction or any other purpose.

REV.	DATE	REVISION	BY	CHKD
G	[illegible]	REVISED For NOBs	R.B.G.	[illegible]
F	8/9/89	GENERAL REVISION	L.C.B.	
E	5/4/89	GENERAL REVISION	L.C.B.	L.D.C.
D	4/21/89	ISSUED FOR PERMIT	T.E.R.	L.D.C.
C	3/XX/89	GENERAL REVISION	M.J.A.	L.D.C.
B	2/8/89	ISSUED FOR CLIENT REVIEW	W.W.L.	L.D.C.
A	1/6/89	ISSUED FOR INTERNAL REVIEW	W.W.L.	L.D.C.

PROJECT
FLORIDA FIRST
PROCESSING, INC.

TITLE
P & ID ORGANIC TREATMENT
PRIMARY COMBUSTION
FEED SYSTEM
SHEET 1 OF 2

SCALE: NONE

International
WasteEnergy
Systems
ST. LOUIS, MO.

DRAWN	DATE	APPD	DATE	DRAWING NO.	REV.
W.W.L.	12/21/88	P.J.K.	10/1/90	8813-00-F-064	G
CHKD	DATE		DATE		

8813F064

G-3

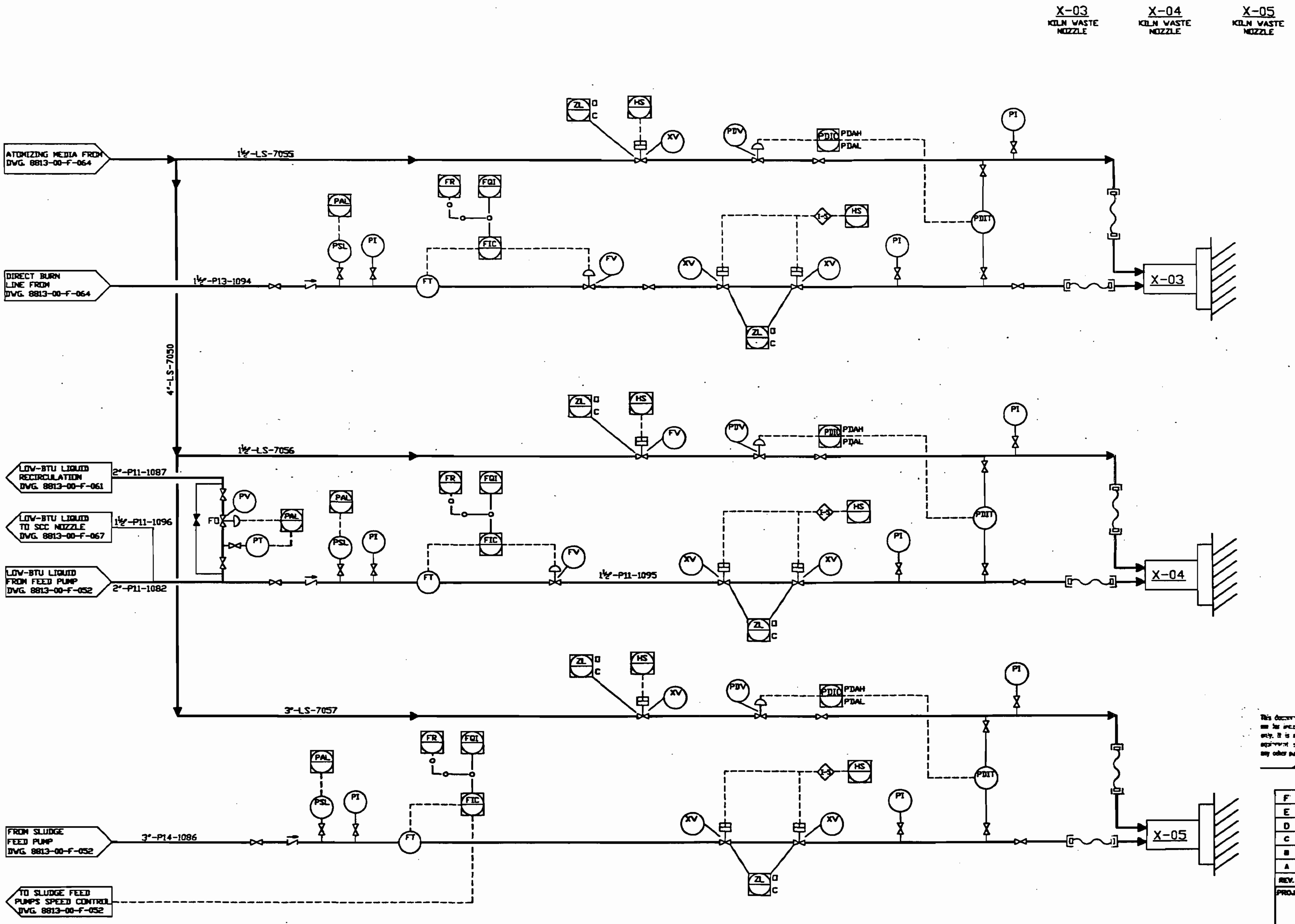

This document has been prepared and is approved by me for inclusion in [illegible] only. It is neither [illegible] for equipment or material procurement, construction or any other purpose.

F	[illegible]	REVISED For NOIs	W.L.F.	[illegible]
E	9/8/89	GENERAL REVISION	L.C.B.	L.D.C.
D	4/21/89	ISSUED FOR PERMIT	T.E.R.	L.D.C.
C	3/[illegible]/88	GENERAL REVISION	M.J.A.	L.D.C.
B	2/8/88	ISSUED FOR CLIENT REVIEW	W.W.L.	L.D.C.
A	1/8/88	ISSUED FOR INTERNAL REVIEW	W.A.M.	L.D.C.
REV.	DATE	REVISION	BY	CHKD

PROJECT
FLORIDA FIRST
PROCESSING, INC.

SCALE: NONE

International
WasteEnergy
Systems
ST. LOUIS, MO.

TITLE
P&ID ORGANIC TREATMENT
PRIMARY COMBUSTION
FEED SYSTEM
SHEET 2 OF 2

DRAWN	DATE	APPD	DATE	DRAWING NO.	REV.
W.A.M.	12/21/88	PJK	10/1/90	8813-00-F-065	F
CHKD	DATE		DATE		

RR13F065

F-1

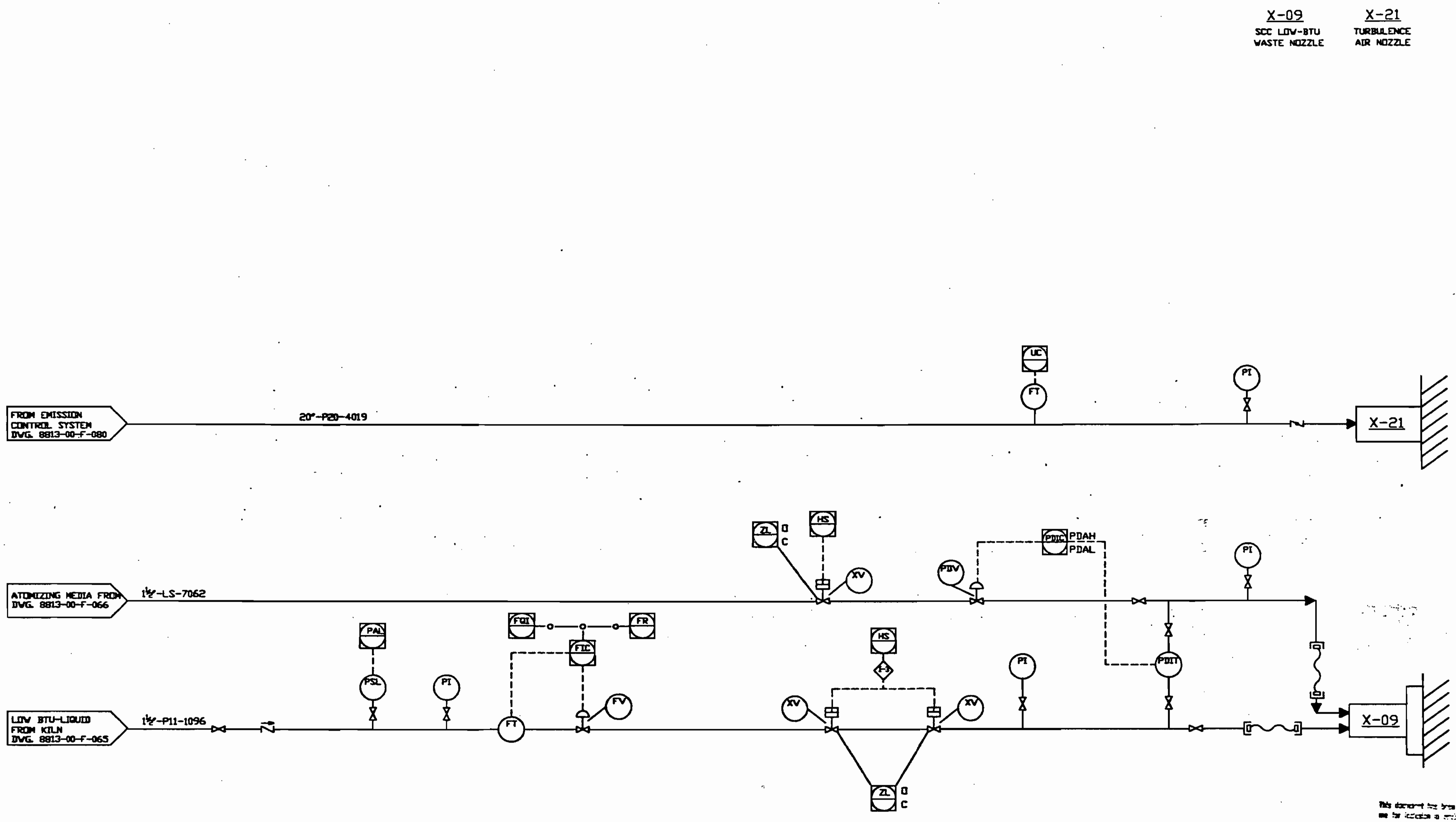

This document has been prepared and is approved by me for inclusion in environmental permit applications only. It is neither prepared nor is it to be used for equipment or material procurement, construction or any other purpose.

No. 20927

G	4/6/92	REVISED for NODs	R.W.G.	JCC
F	8/9/89	GENERAL REVISION	L.C.O.	
E	5/4/89	GENERAL REVISION	L.C.O.	L.O.C.
D	4/21/89	ISSUED FOR PERMIT	L.C.O.	L.O.C.
C	3/22/89	GENERAL REVISION	M.J.A.	L.O.C.
B	2/8/89	ISSUED FOR CLIENT REVIEW	R.W.L.	L.O.C.
A	12/21/88	ISSUED FOR INTERNAL REVIEW	W.A.M.	L.O.C.
REV.	DATE	REVISION	BY	CHKD

PROJECT
FLORIDA FIRST
PROCESSING, INC.

TITLE
P&ID ORGANIC TREATMENT
SECONDARY COMBUSTION CHAMBER
FEED SYSTEM
SHEET 2 OF 2

SCALE: NONE

International
WasteEnergy
Systems
ST. LOUIS, MO.

DRAWN	DATE	APPD	DATE	DRAWING NO.	REV.
W.A.M.	12/21/88	FJK	10/1/90	8813-00-F-067	G
CHKD	DATE		DATE		

8813F067

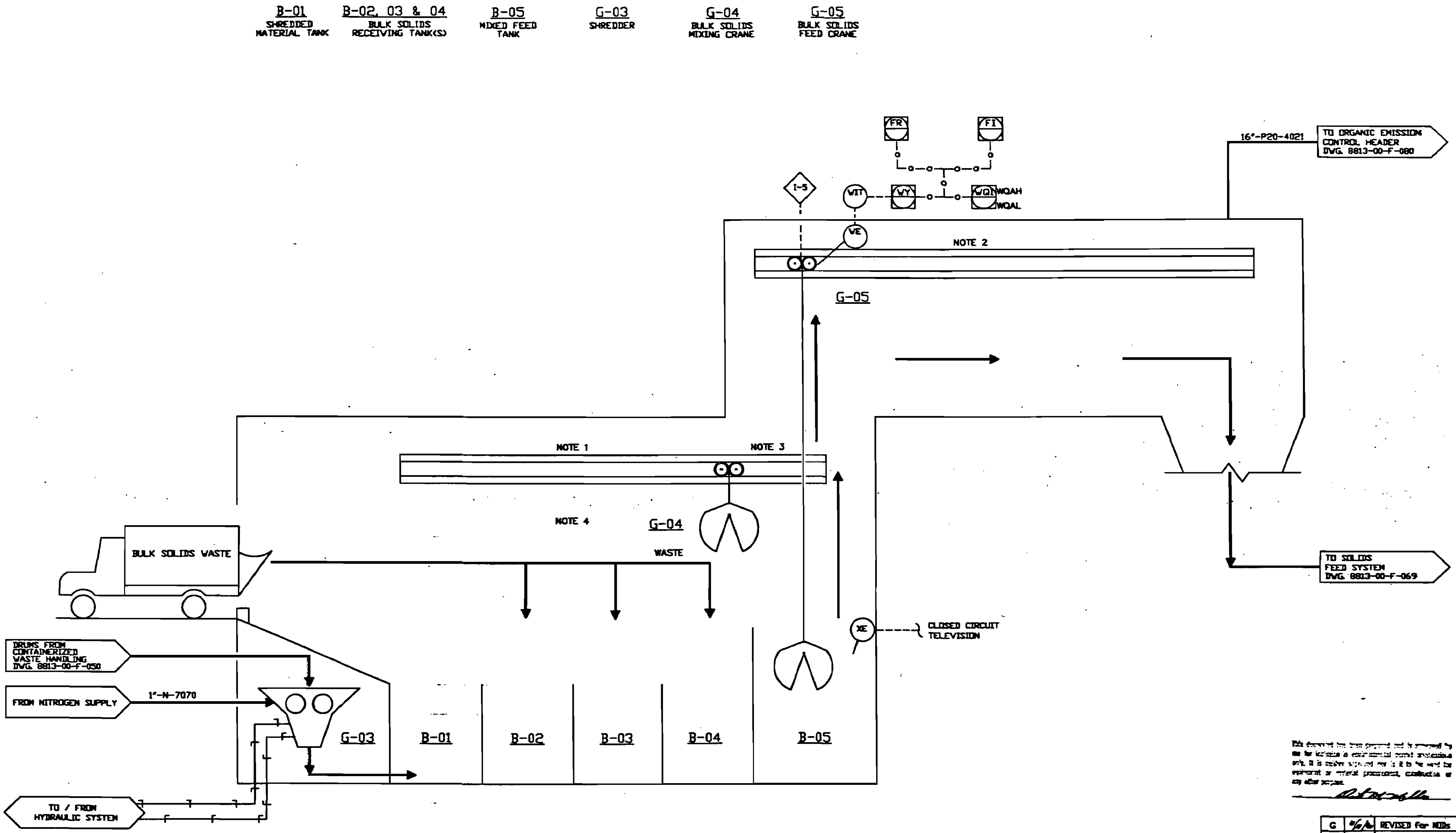

This document has been prepared and is approved by me for inclusion in environmental permit applications only. It is neither approved nor is it to be used for equipment or material procurement, construction or any other purpose.

No. [illegible]
STATE OF FLORIDA

NOTES:

1. MANUALLY OPERATED GRAPPLING CRANE.
2. AUTOMATIC BULK SOLIDS GRAPPLING CRANE.
3. THE CRANES WILL BE INTERLOCKED TO PREVENT COLLISIONS.
4. A FIRE PROTECTION SYSTEM WILL BE INSTALLED.

REV.	DATE	REVISION	BY	CHKD
G	[illegible]	REVISED For NODs	R.B.C.	[illegible]
F	9/8/89	GENERAL REVISION	L.C.D.	L.D.C.
E	5/4/89	GENERAL REVISION	L.C.D.	L.D.C.
D	4/21/89	ISSUED FOR PERMIT		L.D.C.
C	3/[illegible]	GENERAL REVISION		L.D.C.
B	2/8/88	ISSUED FOR CLIENT REVIEW	W.W.L.	L.D.C.
A	1/06/88	ISSUED FOR INTERNAL REVIEW	R.A.M.	L.D.C.

SCALE: NONE

International WasteEnergy Systems
ST. LOUIS, MO.

PROJECT
FLORIDA FIRST PROCESSING, INC.

TITLE
P&ID ORGANIC TREATMENT
BULK SOLIDS
UNLOADING & HANDLING

DRAWN	DATE	APPD	DATE	DRAWING NO.	REV.
R.A.M.	12/21/88	P.J.K.	10/1/90	8813-00-F-068	G
CHKD	DATE		DATE		

RR11F08R

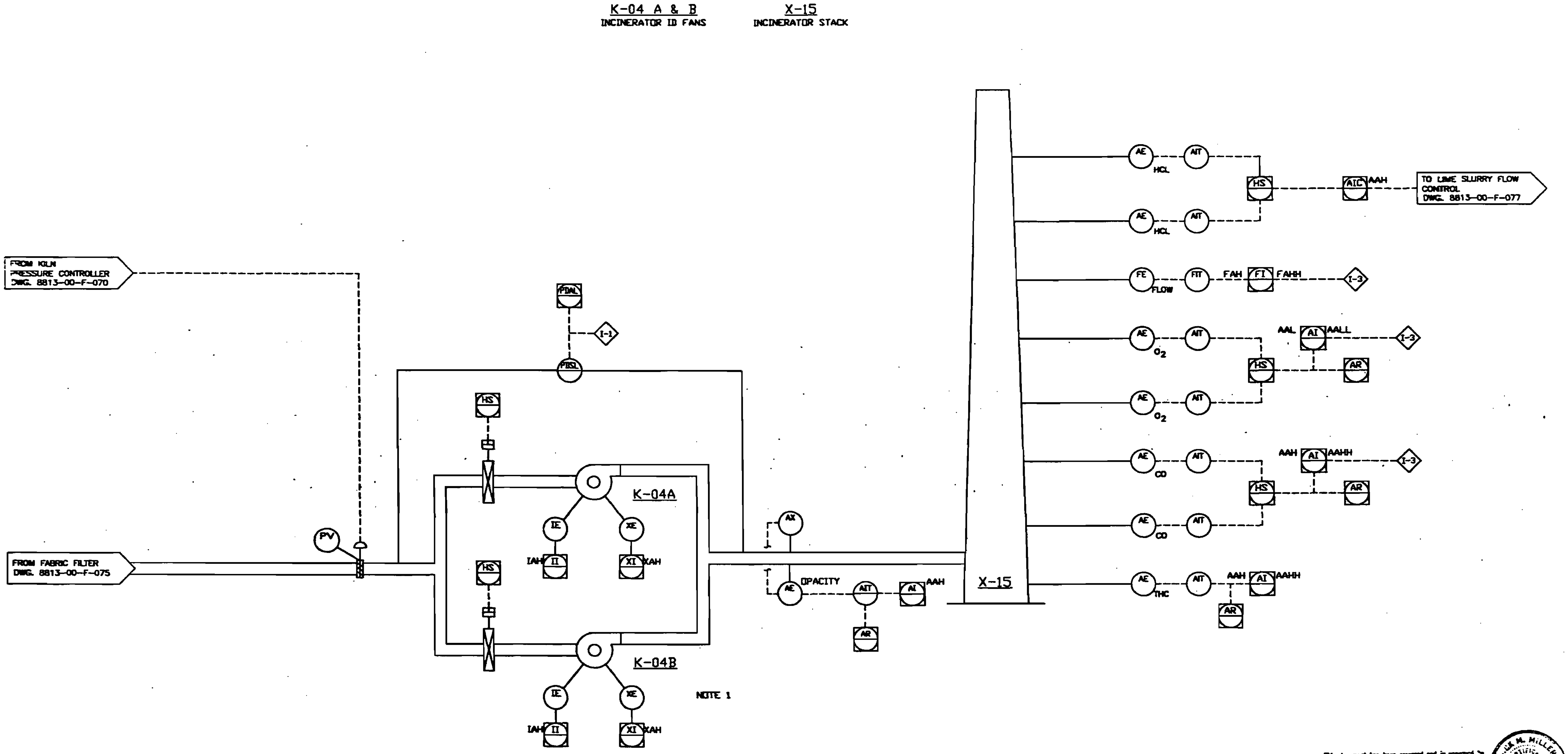

NOTE:

1. ID-FANS CONNECTED TO EMERGENCY POWER SUPPLY

This document has been prepared and is presented by me for inclusion in governmental permit applications only. It is neither approved nor is it to be used for [illegible] of material procurement, construction or any other purpose.

No. [illegible]

REV.	DATE	REVISION	BY	CHKD
F	[illegible]	REVISED For NODs	R.W.R.	[illegible]
E	9/8/90	GENERAL REVISION	L.C.D.	
D	5/4/89	GENERAL REVISION	L.C.D.	L.D.C.
C	4/21/89	ISSUED FOR PERMIT	L.C.D.	L.D.C.
B	[illegible]	GENERAL REVISION	[illegible]	L.D.C.
A	2/17/88	ISSUED FOR INTERNAL REVIEW	D.C.A.	L.D.C.

PROJECT
FLORIDA FIRST
PROCESSING, INC.

TITLE
P&ID ORGANIC TREATMENT
INCINERATOR ID FAN & STACK

SCALE: NONE

International
WasteEnergy
Systems
ST. LOUIS, MO.

DRAWN	DATE	APPD	DATE	DRAWING NO.	REV.
D.C.A.	2/16/88	P.J.	10/1/90	8813-00-F-076	F
CHKD	DATE		DATE		

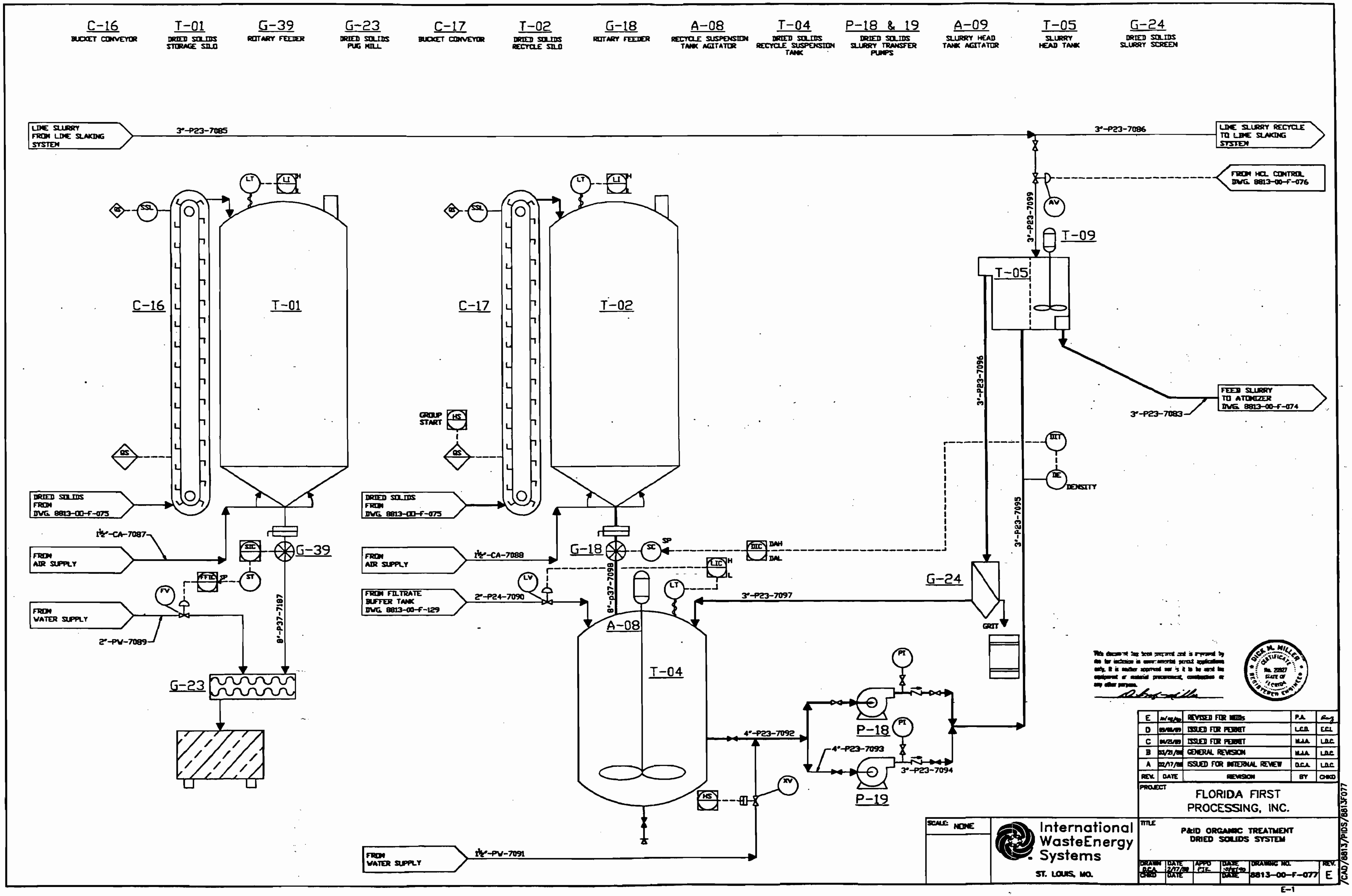

This document has been prepared and is approved by me for inclusion in governmental permit applications only. It is neither approved nor is it to be used for equipment or material procurement, construction or any other purpose.

DICK M. MILLER No. 20827

REV.	DATE	REVISION	BY	CHKD
E	[illegible]	REVISED FOR MODs	P.A.	
D	[illegible]	ISSUED FOR PERMIT	L.C.D.	E.C.L.
C	04/21/89	ISSUED FOR PERMIT	M.J.A.	L.D.C.
B	03/21/88	GENERAL REVISION	M.J.A.	L.D.C.
A	02/17/88	ISSUED FOR INTERNAL REVIEW	D.C.A.	L.D.C.

PROJECT
FLORIDA FIRST
PROCESSING, INC.

TITLE
P&ID ORGANIC TREATMENT
DRIED SOLIDS SYSTEM

SCALE: NONE

International
WasteEnergy
Systems
ST. LOUIS, MO.

DRAWN	DATE	APPD	DATE	DRAWING NO.	REV.
D.C.A.	2/17/88	PJK	[illegible]	8813-00-F-077	E
CHKD	DATE		DATE		

/CAD/8813/PIDS/8813F077

E-1

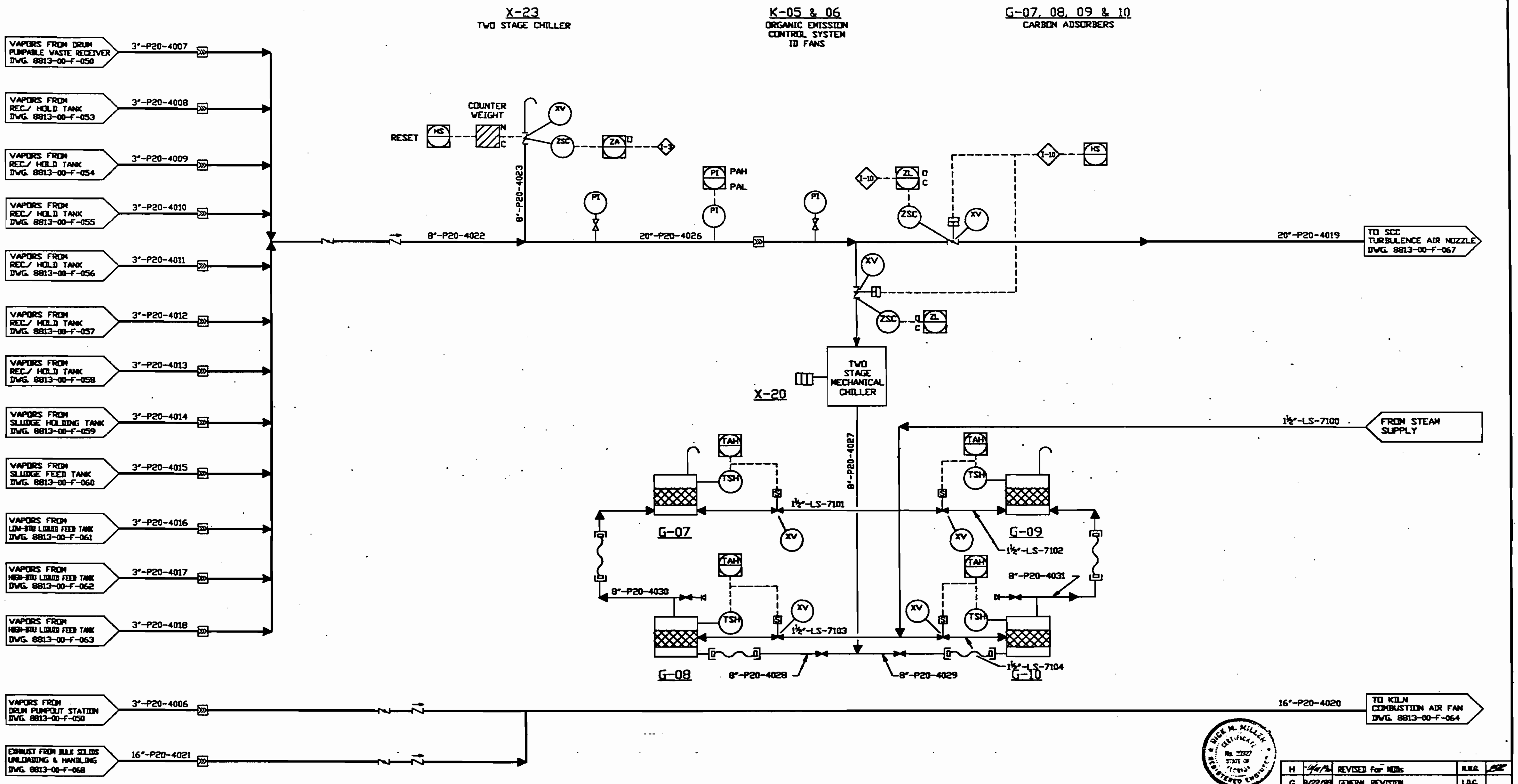

DICK M. MILLER CERTIFICATE No. 33027 STATE OF FLORIDA REGISTERED ENGINEER

This document has been prepared and is approved by me for inclusion in environmental permit applications only. It is neither approved nor is it to be used for equipment or material procurement, construction or any other purpose.

REV.	DATE	REVISION	BY	CHKD
H	4/4/96	REVISED for NODs	R.W.G.	
G	9/22/89	GENERAL REVISION	L.D.C.	
F	5/4/89	GENERAL REVISION	L.C.R.	L.D.C.
E	4/27/89	ISSUED FOR PERMIT	L.C.R.	L.D.C.
D	4/21/89	GENERAL REVISION		L.D.C.
C	3/XX/88	GENERAL REVISION	M.K.	L.D.C.
B	2/8/88	ISSUE FOR CLIENT REVIEW	W.W.L.	L.D.C.
A	1/20/88	ISSUE FOR INTERNAL REVIEW	W.W.L.	L.D.C.

PROJECT
FLORIDA FIRST
PROCESSING, INC.

SCALE: NONE

International
WasteEnergy
Systems
ST. LOUIS, MO.

TITLE
P&ID ORGANIC TREATMENT
EMISSION CONTROL
SYSTEM

DRAWN	DATE	APPD	DATE	DRAWING NO.	REV.
RWH	1/19/88	P.S.L.	10/11/90	8813-00-F-080	H
CHKD	DATE		DATE		

8813F080

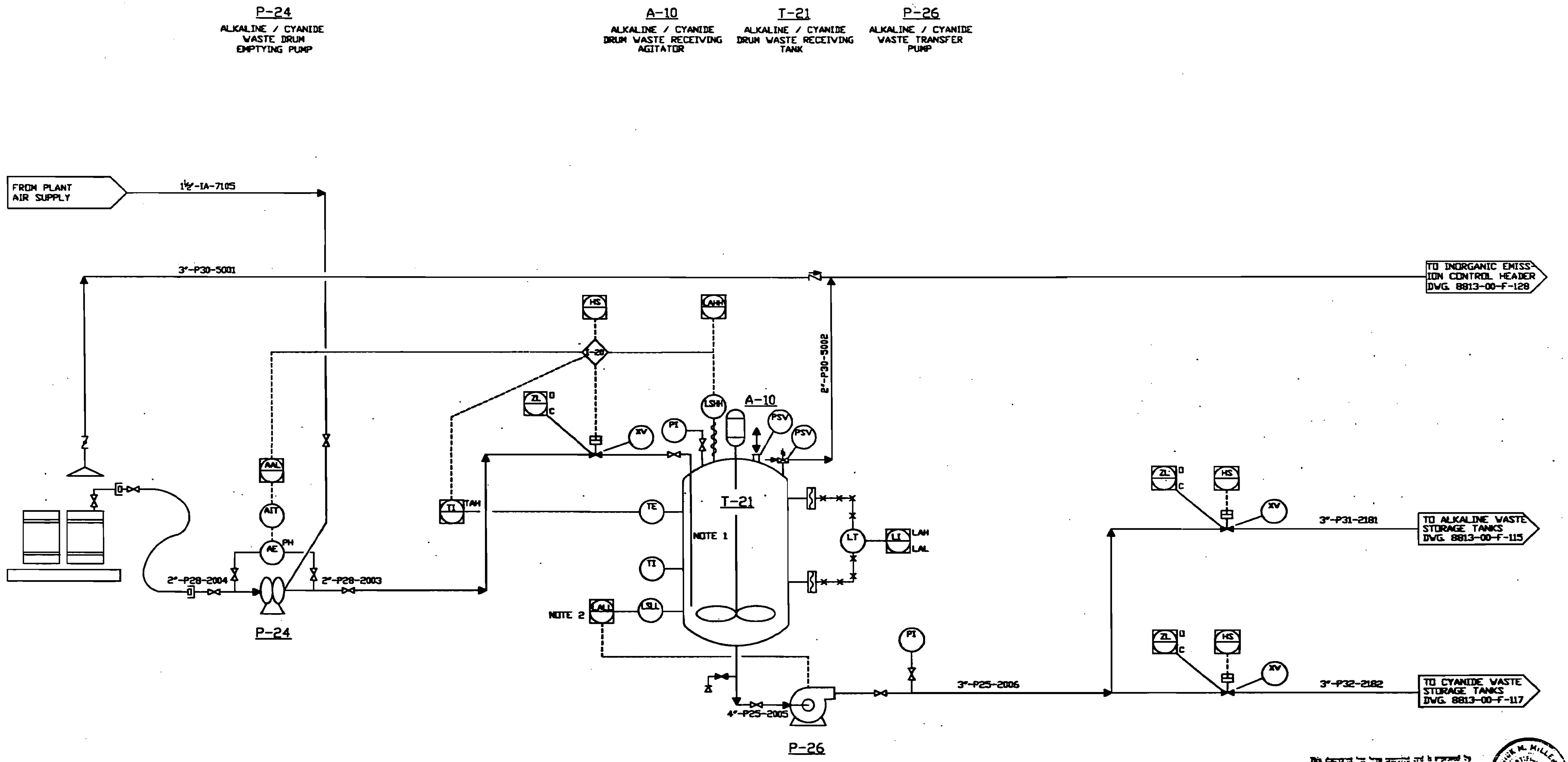

This document has been prepared and is approved by me for inclusion in environmental permit applications only. It is neither approved nor is it to be used for equipment or material procurement, construction or any other purpose.

NO. 23507
STATE OF FLORIDA

NOTES:

1. THE DIP TUBES WILL HAVE SIPHON HOLES, TO PREVENT BACKFLOW.
2. A LOW LOW LEVEL ALARM AUTOMATICALLY STOPS THE PUMP.

REV.	DATE	REVISION	BY	CHKD
F	9/21/92	REVISED For NODs	R.W.G.	EGB
E	9/8/89	GENERAL REVISION	L.C.D.	L.D.C.
D	5/4/89	GENERAL REVISION	L.C.D.	L.D.C.
C	4/21/89	ISSUED FOR PERMIT	L.C.D.	L.D.C.
B	3/31/88	GENERAL REVISION	M.J.A.	L.D.C.
A	3/10/88	ISSUED FOR INTERNAL REVIEW	M.J.A.	L.D.C.

PROJECT
FLORIDA FIRST
PROCESSING, INC.

SCALE: NONE

International
WasteEnergy
Systems
ST. LOUIS, MO.

TITLE
P&ID INORGANIC TREATMENT
ALKALINE/CYANIDE CONTAINERIZED
WASTE HANDLING
SHEET 1 OF 2

DRAWN	DATE	APPD	DATE	DRAWING NO.	REV.
MJA	3/9/88	P.B.	10/1/90	8813-00-F-098	F
CHKD	DATE		DATE		

8813F098

F-1

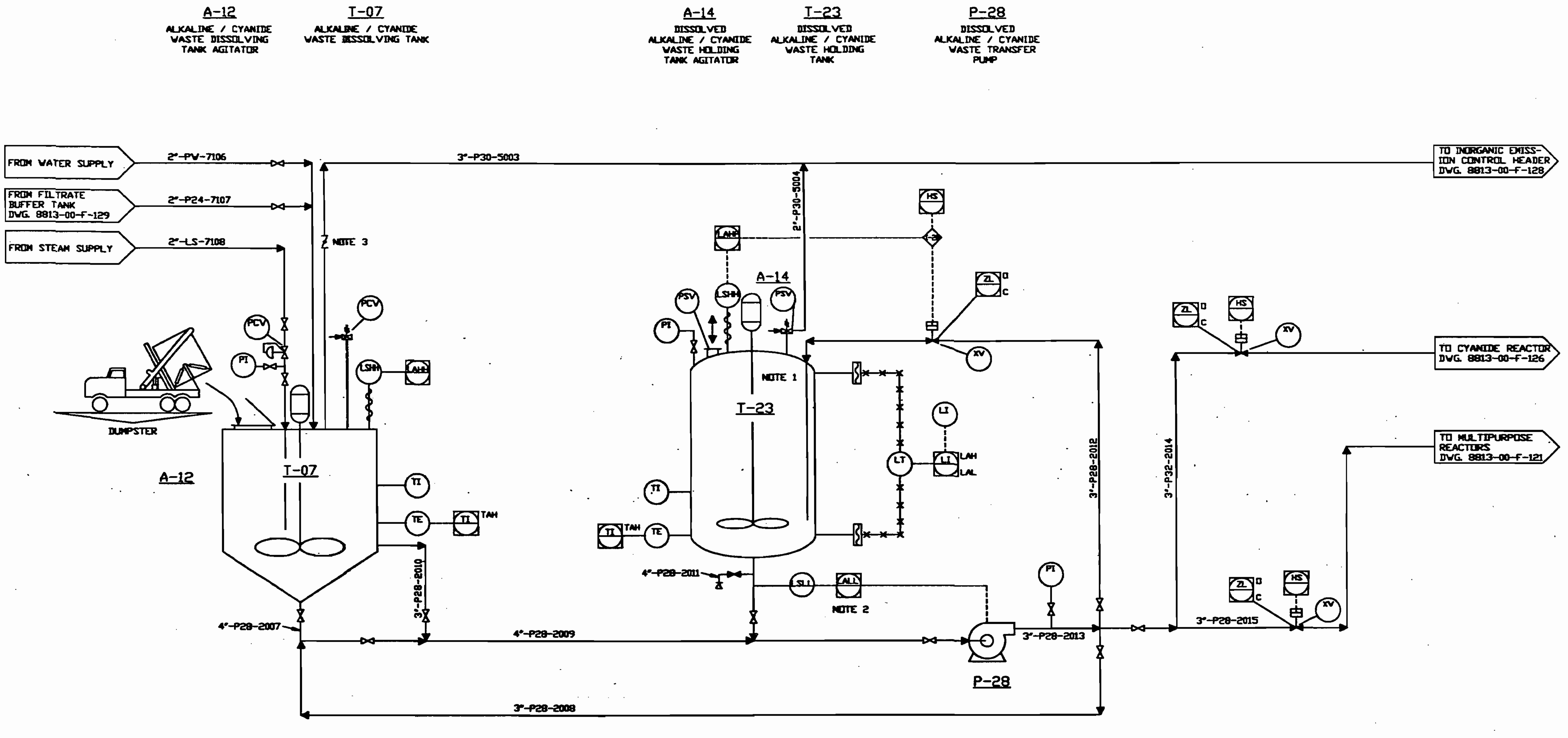

This document has been prepared and is approved by me for inclusion in environmental permit applications only. It is neither approved nor is it to be used for equipment or material procurement, construction or any other purpose.

DICK M. MILLER
No. 20827
STATE OF FLORIDA

NOTES:

1. THE DIP TUBES WILL HAVE SIPHON HOLES, TO PREVENT BACKFLOW.
2. A LOW LOW LEVEL ALARM AUTOMATICALLY STOPS THE PUMP.
3. BUTTERFLY VALVE WITH ORIFICE IN DISK TO PREVENT TIGHT SHUTOFF.

REV.	DATE	REVISION	BY	CHKD
F	[illegible]	REVISED for NODs	R.H.G.	[illegible]
E	9/8/89	GENERAL REVISION	L.C.B.	L.D.C.
D	5/4/89	GENERAL REVISION	L.C.B.	L.D.C.
C	4/21/89	ISSUED FOR PERMIT	L.C.B.	L.D.C.
B	3/XX/88	GENERAL REVISION	M.J.A.	L.D.C.
A	3/10/88	ISSUED FOR INTERNAL REVIEW	M.J.A.	L.D.C.

SCALE: NONE

International WasteEnergy Systems
ST. LOUIS, MO.

PROJECT
FLORIDA FIRST PROCESSING, INC.

TITLE
P&ID INORGANIC TREATMENT
ALKALINE/CYANIDE CONTAINERIZED
WASTE HANDLING

SHEET 2 OF 2

DRAWN	DATE	APPD	DATE	DRAWING NO.	REV.
MJA	3/3/88	[illegible]	[illegible]	8813-00-F-099	F
CHKD	DATE		DATE		

CAD\8813\PIDS\8813F099

F-3

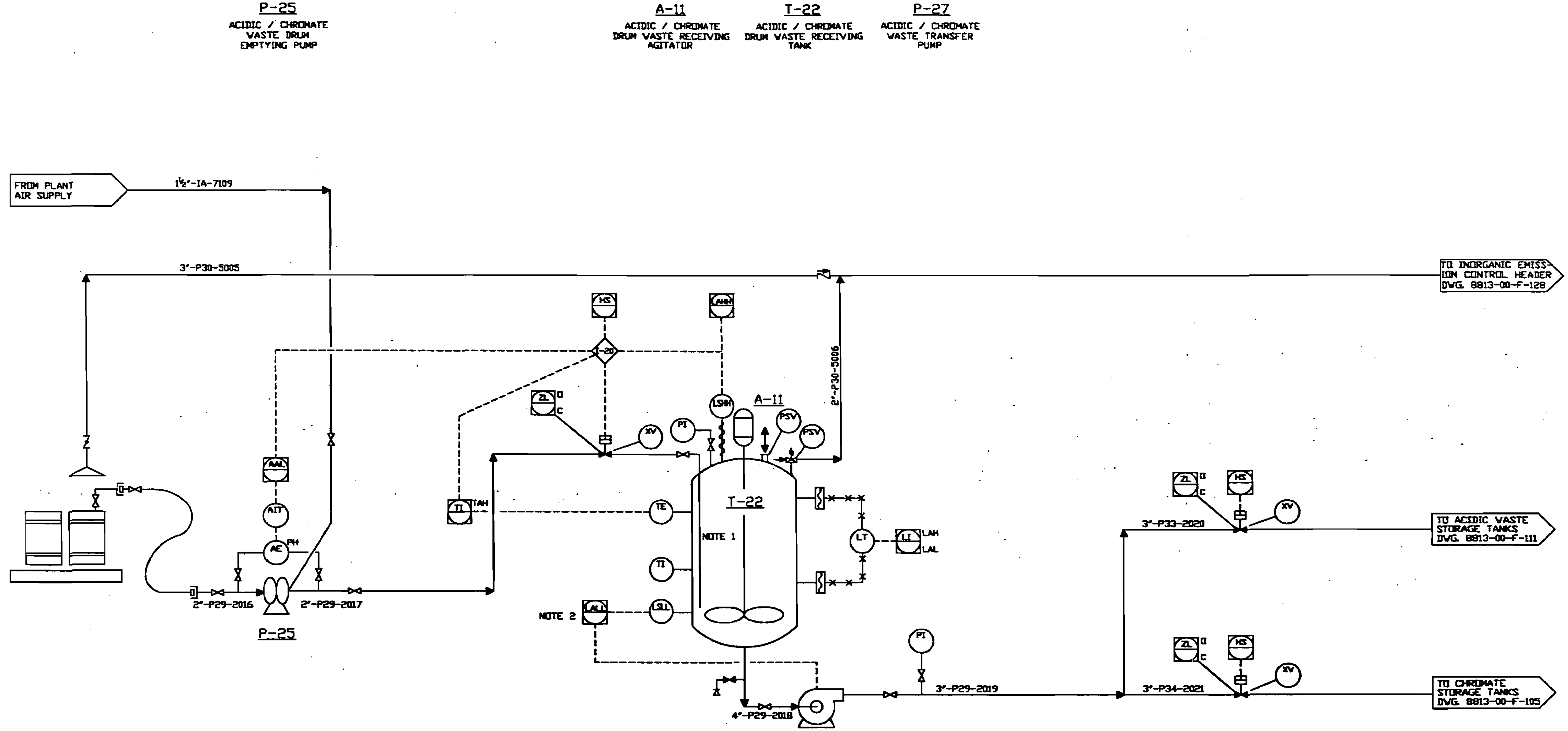

NOTES:

1. THE DIP TUBES WILL HAVE SIPHON HOLES TO PREVENT BACKFLOW.
2. A LOW LOW LEVEL ALARM AUTOMATICALLY STOPS THE PUMP.

DICK M. MILLER
No. 22927
STATE OF FLORIDA

This document has been prepared and is reviewed by me for inclusion in environmental permit applications only. It is neither approved nor is it to be used for equipment or material procurement, construction or any other purpose.

F	10/11/90	REVISED FOR NODs	R.W.B.	[illegible]
E	9/8/89	GENERAL REVISION	L.C.R.	L.D.C.
D	5/4/89	GENERAL REVISION	L.C.R.	L.D.C.
C	4/21/89	ISSUED FOR PERMIT	L.C.R.	L.D.C.
B	3/[illegible]/88	GENERAL REVISION	M.J.A.	L.D.C.
A	3/10/88	ISSUED FOR INTERNAL REVIEW	M.J.A.	L.D.C.
REV.	DATE	REVISION	BY	CHKD

PROJECT
FLORIDA FIRST
PROCESSING, INC.

SCALE: NONE

International WasteEnergy Systems
ST. LOUIS, MO.

TITLE
P&ID INORGANIC TREATMENT
ACIDIC/CHROMATE CONTAINERIZED
WASTE HANDLING
SHEET 1 OF 2

DRAWN	DATE	APPD	DATE	DRAWING NO.	REV.
MJA	3/9/88	[illegible]	10/11/90	8813-00-F-100	F
CHKD	DATE		DATE		

8813F100

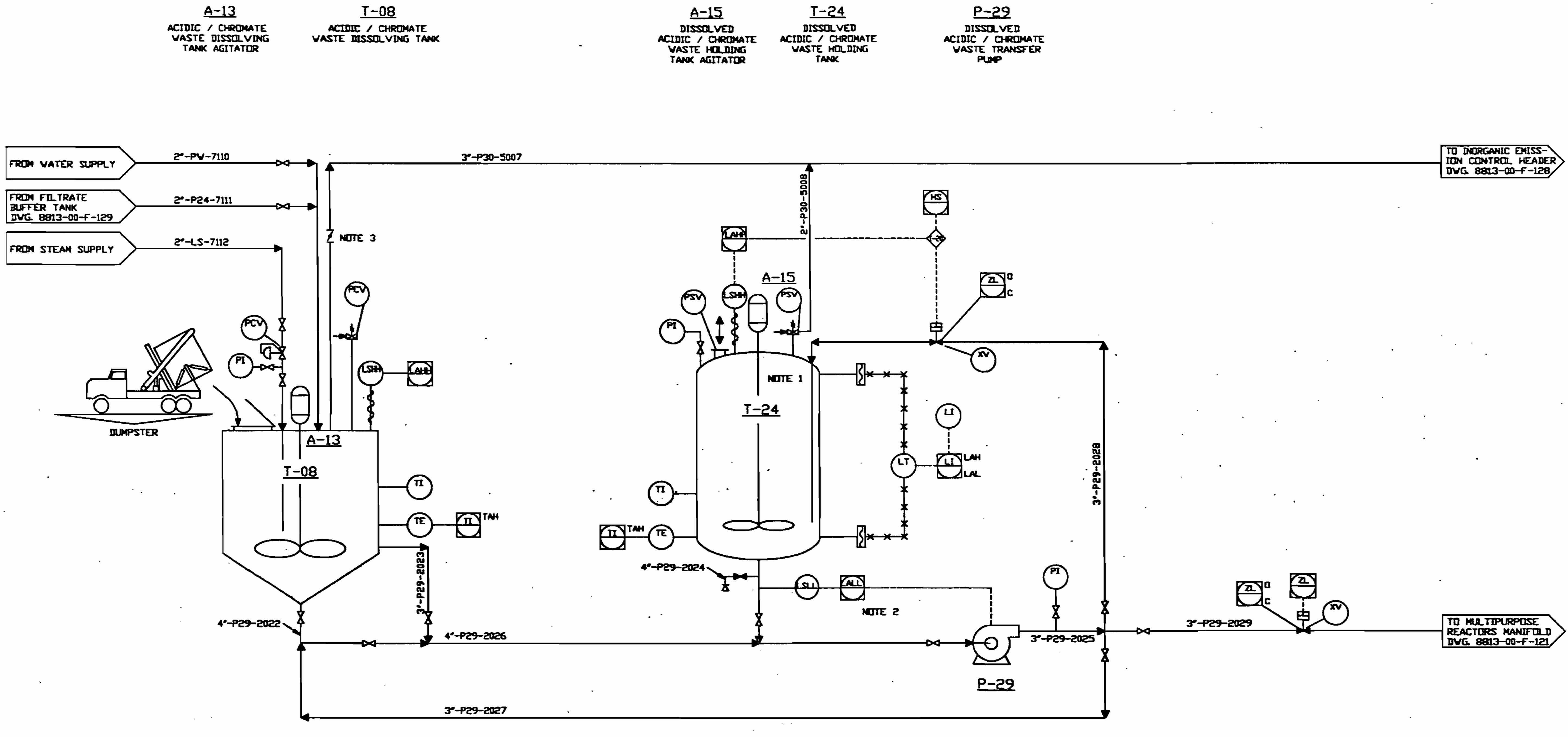

This document has been prepared and is approved by me for inclusion in environmental permit applications only. It is neither approved nor is it to be used for equipment or material procurement, construction or any other purpose.

DICK M. MILLER
CERTIFICATE No. 20927
STATE OF FLORIDA

NOTES:

1. THE DIP TUBES WILL HAVE SIPHON HOLES, TO PREVENT BACKFLOW.
2. A LOW LOW LEVEL ALARM AUTOMATICALLY STOPS THE FIELD PUMP.
3. BUTTERFLY VALVE WITH ORIFICE IN DISK TO PREVENT TIGHT SHUTOFF.

REV.	DATE	REVISION	BY	CHKD
G	[illegible]	REVISED FOR MODs	R.W.G.	[illegible]
F	[illegible]	GENERAL REVISION	L.C.D.	L.D.C.
E	[illegible]	GENERAL REVISION	L.C.D.	L.D.C.
D	04/27/89	ISSUED FOR PERMIT	L.C.D.	L.D.C.
C	04/25/89	GENERAL REVISION	L.C.D.	L.D.C.
B	03/XX/88	GENERAL REVISION	M.J.A.	L.D.C.
A	03/10/88	ISSUED FOR INTERNAL REVIEW	M.J.A.	L.D.C.

PROJECT
FLORIDA FIRST
PROCESSING, INC.

TITLE
P&ID INORGANIC TREATMENT
ACIDIC/CHROMATE CONTAINERIZED
WASTE HANDLING
SHEET 2 OF 2

SCALE: NONE

International
WasteEnergy
Systems
ST. LOUIS, MO.

DRAWN	DATE	APPD	DATE	DRAWING NO.	REV.
MJA	3/9/88	PJK	10/3/90	8813-00-F-101	G
CHKD	DATE		DATE		

/CAD/8813/PIDS/8813F101

G-3

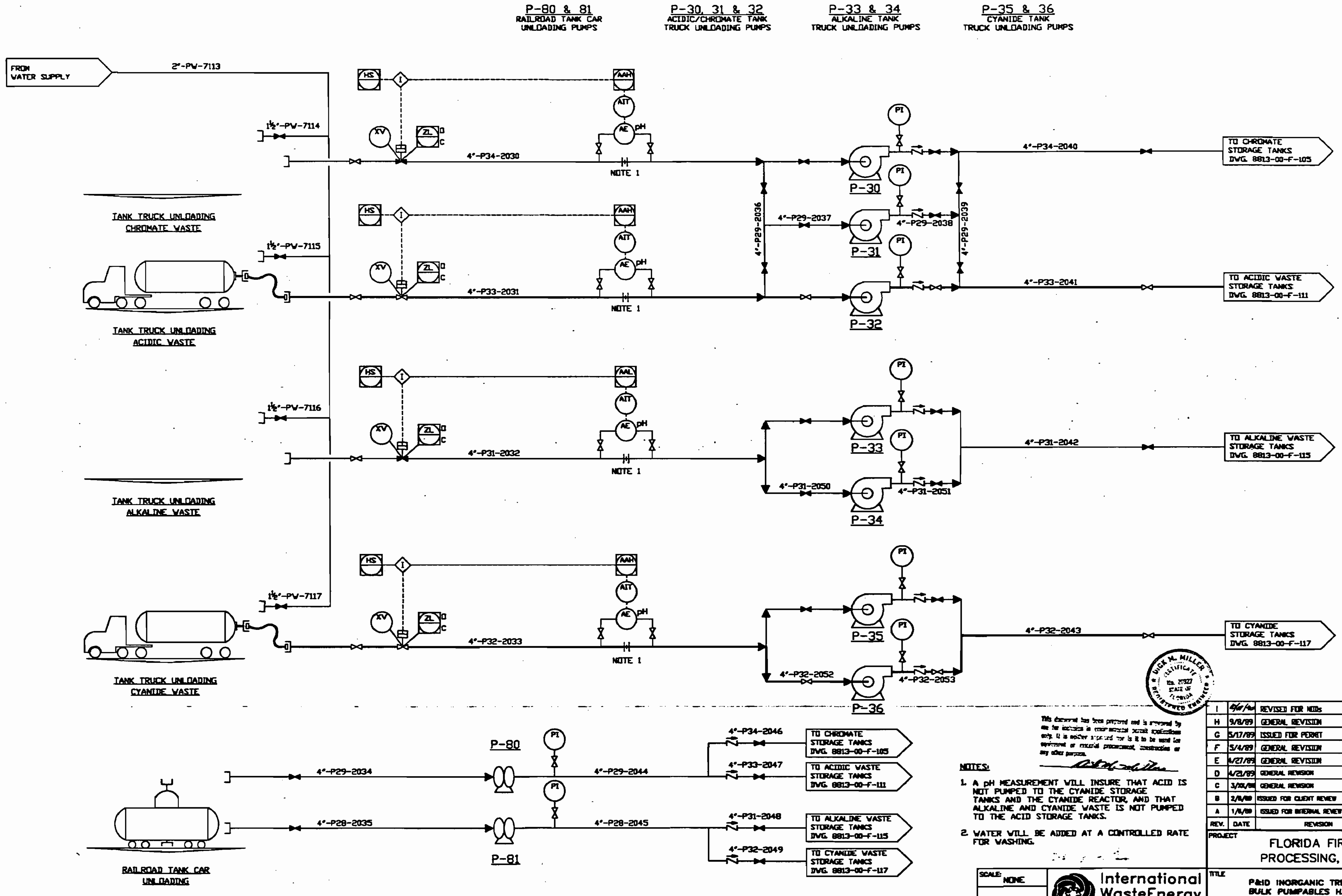

DICK M. MILLER
CERTIFICATE
No. 20927
STATE OF FLORIDA
REGISTERED ENGINEER

This document has been prepared and is approved by me for inclusion in environmental permit applications only. It is neither approved nor is it to be used for equipment or material procurement, construction or any other purpose.

NOTES:

1. A pH MEASUREMENT WILL INSURE THAT ACID IS NOT PUMPED TO THE CYANIDE STORAGE TANKS AND THE CYANIDE REACTOR, AND THAT ALKALINE AND CYANIDE WASTE IS NOT PUMPED TO THE ACID STORAGE TANKS.
2. WATER WILL BE ADDED AT A CONTROLLED RATE FOR WASHING.

REV.	DATE	REVISION	BY	CHKD
I	4/11/90	REVISED FOR NODs	R.W.G.	
H	9/8/89	GENERAL REVISION	L.C.D.	L.D.C.
G	5/17/89	ISSUED FOR PERMIT	L.C.D.	L.D.C.
F	5/4/89	GENERAL REVISION	L.C.D.	L.D.C.
E	4/27/89	GENERAL REVISION	L.C.D.	L.D.C.
D	4/21/89	GENERAL REVISION	L.C.D.	L.D.C.
C	3/XX/89	GENERAL REVISION	L.C.D.	L.D.C.
B	2/8/89	ISSUED FOR CLIENT REVIEW	W.R.L.	L.D.C.
A	1/6/89	ISSUED FOR INTERNAL REVIEW	W.A.M.	L.D.C.

PROJECT
FLORIDA FIRST
PROCESSING, INC.

SCALE: NONE

International
WasteEnergy
Systems
ST. LOUIS, MO.

TITLE
P&ID INORGANIC TREATMENT
BULK PUMPABLES HANDLING

DRAWN	DATE	APPD	DATE	DRAWING NO.	REV.
W.A.M.	1/13/89	P.J.K.	10/1/90	8813-00-F-102	I
CHKD	DATE		DATE		

8813F102

I-3

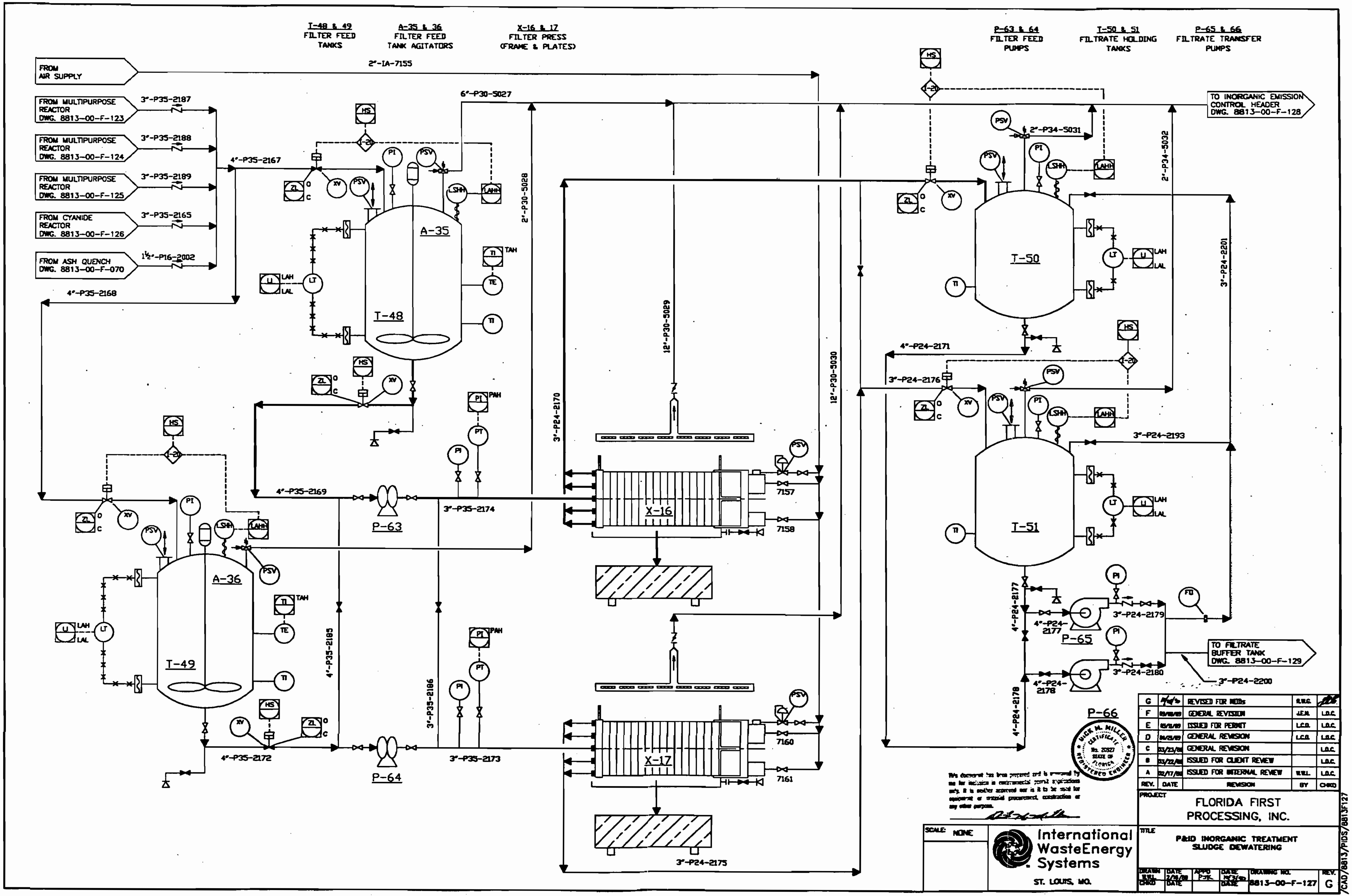

DICK M. MILLER
No. 20327

This document has been prepared and is approved by me for inclusion in environmental permit applications only. It is neither approved nor is it to be used for equipment or material procurement, construction or any other purpose.

REV.	DATE	REVISION	BY	CHKD
G	[illegible]	REVISED FOR NODs	R.W.G.	[illegible]
F	[illegible]	GENERAL REVISION	J.E.M.	L.D.C.
E	[illegible]	ISSUED FOR PERMIT	L.C.D.	L.D.C.
D	[illegible]	GENERAL REVISION	L.C.D.	L.D.C.
C	03/23/89	GENERAL REVISION		L.D.C.
B	03/22/89	ISSUED FOR CLIENT REVIEW		L.D.C.
A	02/17/89	ISSUED FOR INTERNAL REVIEW	W.W.L.	L.D.C.

PROJECT
FLORIDA FIRST
PROCESSING, INC.

SCALE: NONE

International
WasteEnergy
Systems
ST. LOUIS, MO.

TITLE
P&ID INORGANIC TREATMENT
SLUDGE DEWATERING

DRAWN	DATE	APPD	DATE	DRAWING NO.	REV.
W.W.L.	2/16/89	P.J.K.	[illegible]	8813-00-F-127	G
CHKD	DATE		DATE		

/CAD/8813/PIDS/8813F127

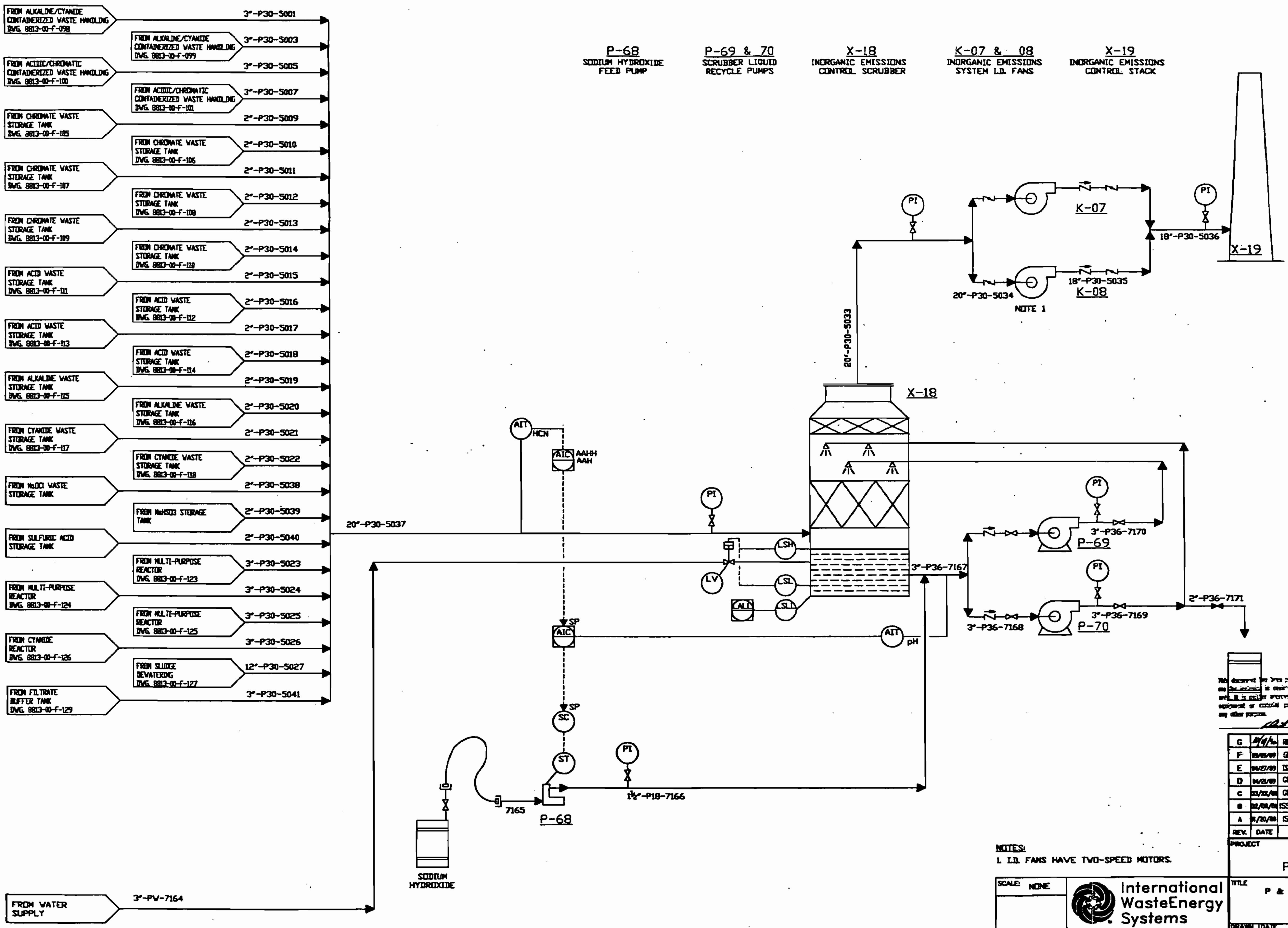

This document has been prepared and is approved by me for inclusion in environmental permit applications only. It is neither approved nor is it to be used for equipment or material procurement, construction or any other purpose.

Dick M. Miller

No. 20327
STATE OF FLORIDA

G	10/4/90	REVISED FOR NODs	R.W.C.	[illegible]
F	[illegible]	GENERAL REVISION	J.E.H.	L.D.C.
E	04/27/89	ISSUED FOR PERMIT	L.C.D.	L.D.C.
D	04/21/89	GENERAL REVISION	L.C.D.	L.D.C.
C	[illegible]	GENERAL REVISION	M.K.	L.D.C.
B	[illegible]	ISSUED FOR CLIENT REVIEW	W.W.L.	L.D.C.
A	[illegible]	ISSUED FOR INTERNAL REVIEW	W.W.L.	L.D.C.
REV.	DATE	REVISION	BY	CHKD

NOTES:

1. I.D. FANS HAVE TWO-SPEED MOTORS.

SCALE: NONE

International WasteEnergy Systems
ST. LOUIS, MO.

PROJECT
FLORIDA FIRST
PROCESSING, INC.

TITLE
P & ID INORGANIC TREATMENT
EMISSION CONTROL
SYSTEM

DRAWN	DATE	APPD	DATE	DRAWING NO.	REV.
W.W.L.	1/19/88	P.W.	10/3/90	8813-00-F-128	G
CHKD	DATE		DATE		

G-2

/CAD/8813/PIDS/8813F128

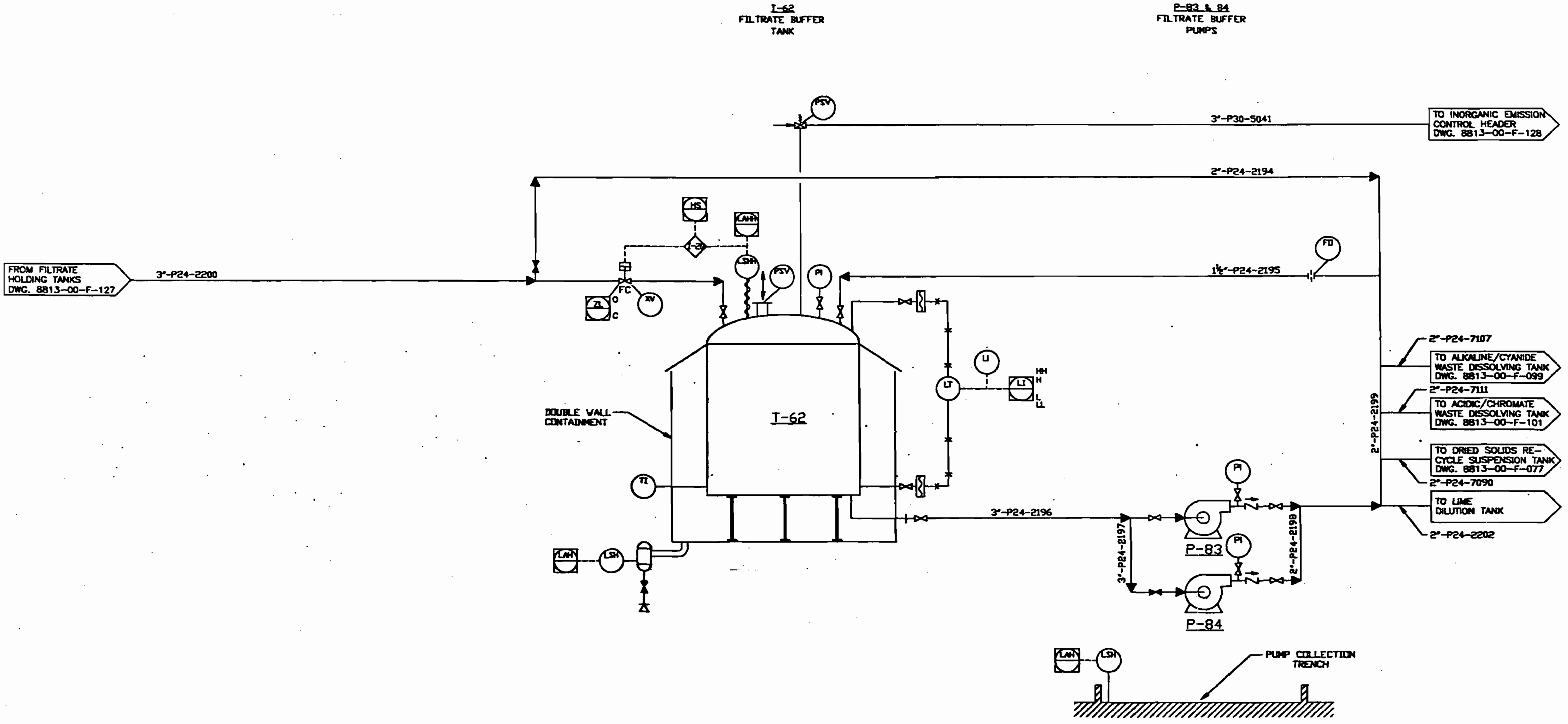

This document has been prepared and is approved by me for inclusion in environmental permit applications only. It is neither approved nor is it to be used for equipment or material procurement, construction or any other purpose.

D M Miller

DICK M. MILLER
No. 20927

B	10/8/90	ISSUED FOR PERMIT	P.A.	
A	10/3/90	ISSUED FOR CLIENT REVIEW	P.A.	RWG
REV.	DATE	REVISION	BY	CHKD

PROJECT
FLORIDA FIRST
PROCESSING, INC.

SCALE: NONE

International
WasteEnergy
Systems
ST. LOUIS, MO.

TITLE
P&ID INORGANIC TREATMENT
FILTRATE BUFFER TANK

DRAWN	DATE	APPD	DATE	DRAWING NO.	REV.
JDB	10/2/90	PJK	10/8/90	8813-00-F-129	B
CHKD	DATE		DATE		

8813F129

B-1

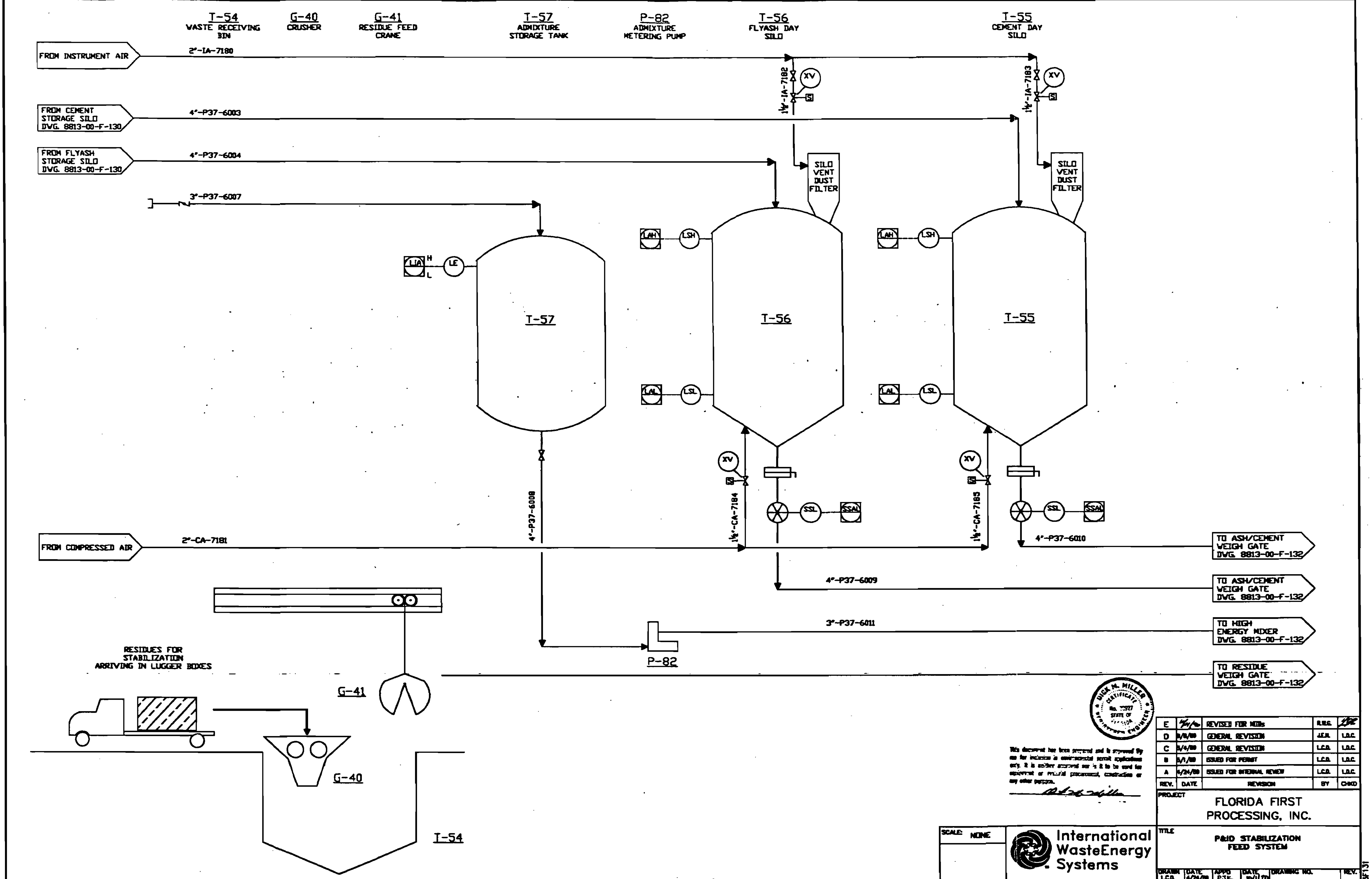

DICK M. MILLER CERTIFICATE No. 27327 STATE OF FLORIDA

This document has been prepared and is approved by me for inclusion in environmental permit applications only. It is neither approved nor is it to be used for equipment or material procurement, construction or any other purpose.

REV.	DATE	REVISION	BY	CHKD
E	[illegible]	REVISED FOR NIDs	R.W.G.	[illegible]
D	8/8/89	GENERAL REVISION	J.E.H.	L.D.C.
C	5/4/89	GENERAL REVISION	L.C.D.	L.D.C.
B	5/1/89	ISSUED FOR PERMIT	L.C.D.	L.D.C.
A	4/24/89	ISSUED FOR INTERNAL REVIEW	L.C.D.	L.D.C.

PROJECT
FLORIDA FIRST
PROCESSING, INC.

SCALE: NONE

International
WasteEnergy
Systems
ST. LOUIS, MO.

TITLE
P&ID STABILIZATION
FEED SYSTEM

DRAWN	DATE	APPD	DATE	DRAWING NO.	REV.
L.C.D.	4/24/89	P.J.K.	10/11/90	8813-00-F-131	E
CHKD	DATE		DATE		

8813F131

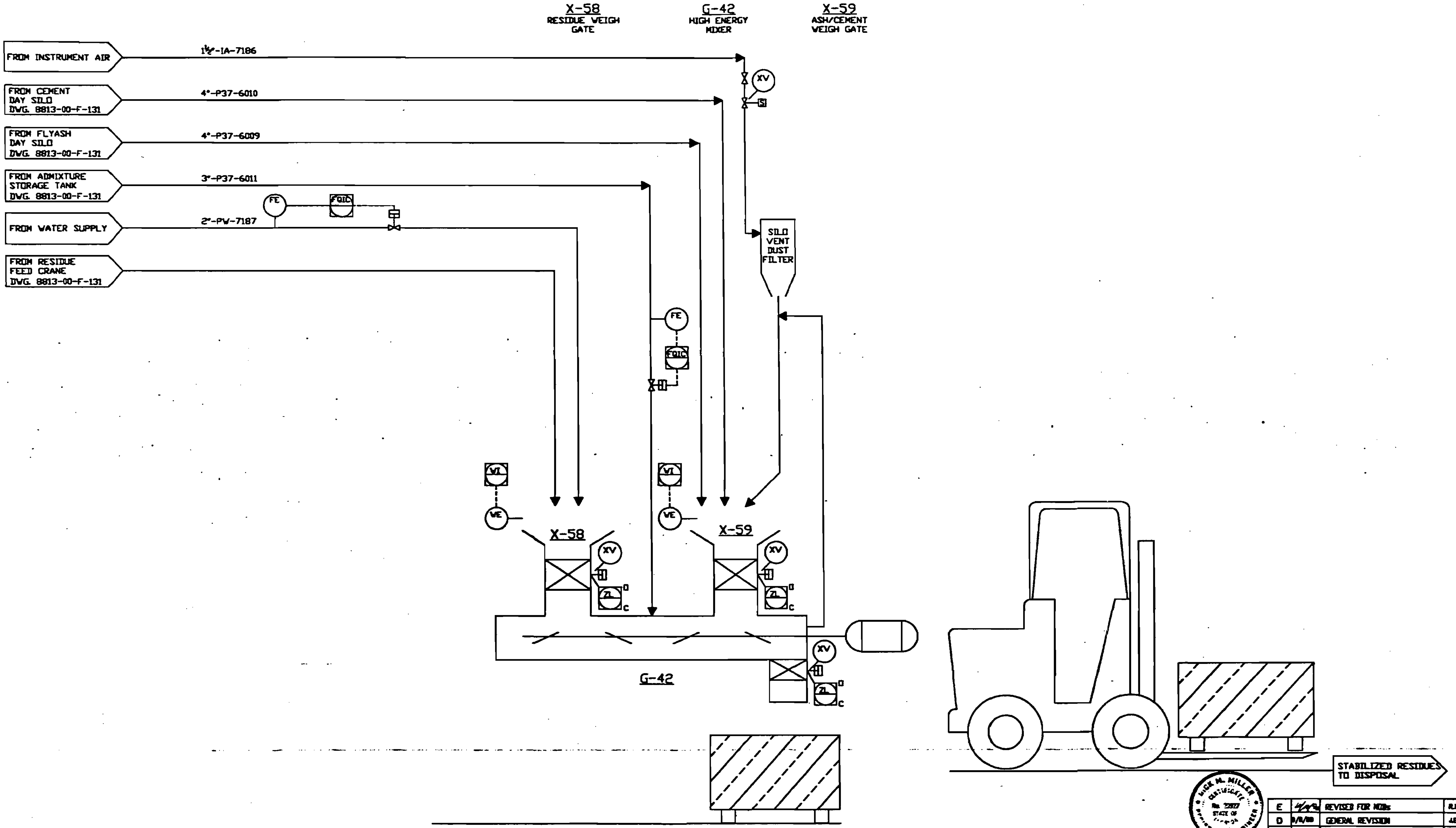

NICK M. MILLER

This document has been prepared and is approved by me for inclusion in environmental permit applications only. It is neither approved nor is it to be used for equipment or material procurement, construction or any other purpose.

REV.	DATE	REVISION	BY	CHKD
E	4/9/90	REVISED FOR NODs	R.M.G.	
D	9/8/88	GENERAL REVISION	J.E.M.	L.D.C.
C	6/1/88	GENERAL REVISION	L.C.B.	L.D.C.
B	3/1/88	ISSUED FOR PERMIT	L.C.B.	L.D.C.
A	4/24/88	ISSUED FOR INTERNAL REVIEW	L.C.B.	L.D.C.

PROJECT
FLORIDA FIRST
PROCESSING, INC.

SCALE: NONE

International
WasteEnergy
Systems
ST. LOUIS, MO.

TITLE
P&ID STABILIZATION
MIXING SYSTEM

DRAWN	DATE	APPD	DATE	DRAWING NO.	REV.
L.C.B.	4/24/88	P.J.F.	10/1/90	8813-00-F-132	E
CHKD	DATE		DATE		

8813F132

E-2

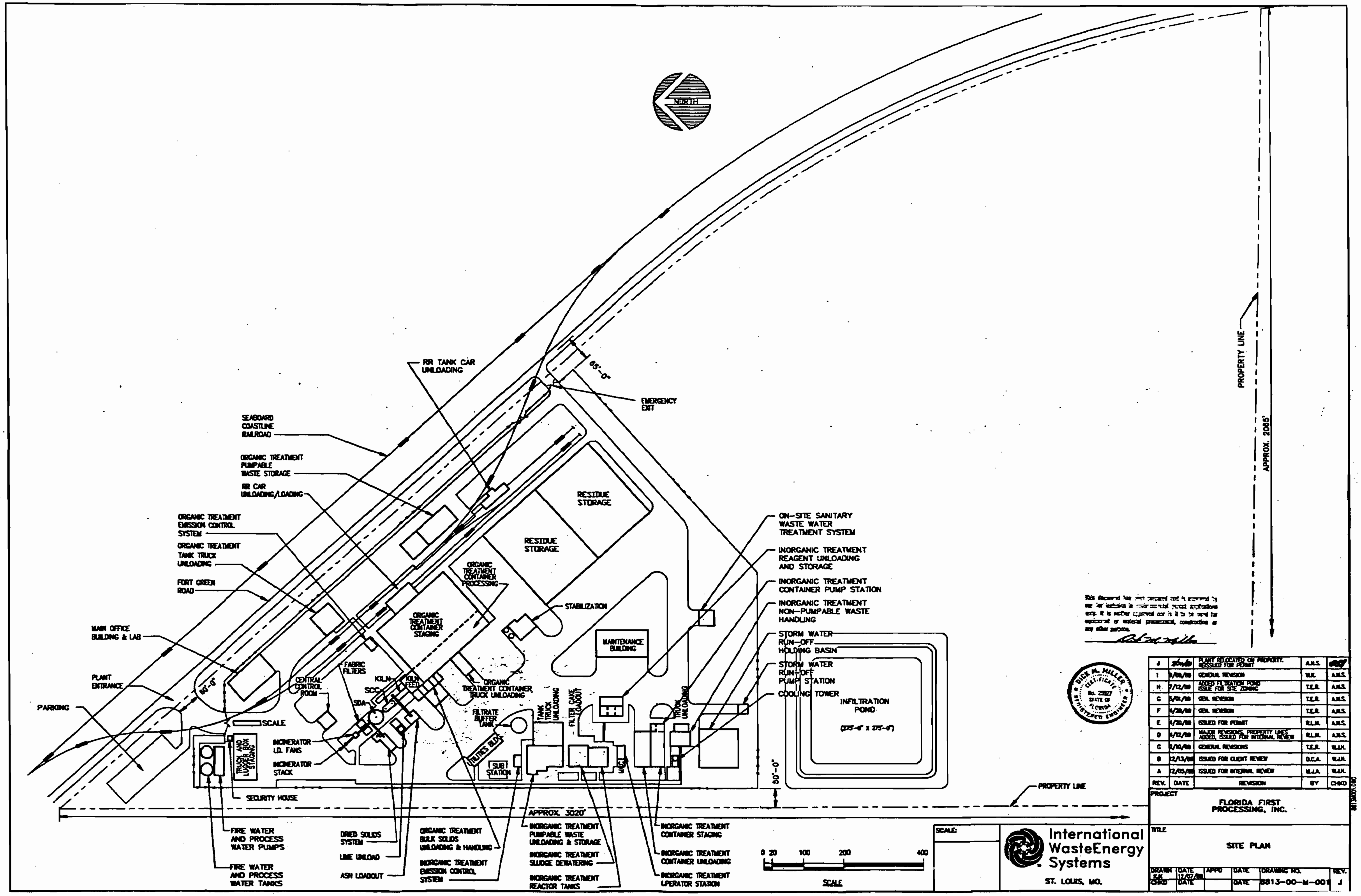

This document has been prepared and is approved by me for inclusion in environmental permit applications only. It is neither approved nor is it to be used for equipment or material procurement, construction or any other purpose.

DICK M. MILLER
No. 23927

REV.	DATE	REVISION	BY	CHKD
J	[illegible]	PLANT RELOCATED ON PROPERTY. REISSUED FOR PERMIT	A.N.S.	[illegible]
I	9/08/89	GENERAL REVISION	W.K.	A.N.S.
H	7/12/89	ADDED FILTRATION POND ISSUE FOR SITE ZONING	T.E.R.	A.N.S.
G	5/01/89	GEN. REVISION	T.E.R.	A.N.S.
F	4/28/89	GEN. REVISION	T.E.R.	A.N.S.
E	4/20/89	ISSUED FOR PERMIT	R.L.M.	A.N.S.
D	4/12/89	MAJOR REVISIONS, PROPERTY LINES ADDED, ISSUED FOR INTERNAL REVIEW	R.L.M.	A.N.S.
C	2/10/89	GENERAL REVISIONS	T.E.R.	W.J.H.
B	12/13/88	ISSUED FOR CLIENT REVIEW	D.C.A.	W.J.H.
A	12/05/88	ISSUED FOR INTERNAL REVIEW	M.J.A.	W.J.H.

SCALE:

International WasteEnergy Systems
ST. LOUIS, MO.

PROJECT
FLORIDA FIRST PROCESSING, INC.

TITLE
SITE PLAN

DRAWN	DATE	APPD	DATE	DRAWING NO.	REV.
K.K.	12/07/88				
CHKD	DATE		DATE	8813-00-M-001	J

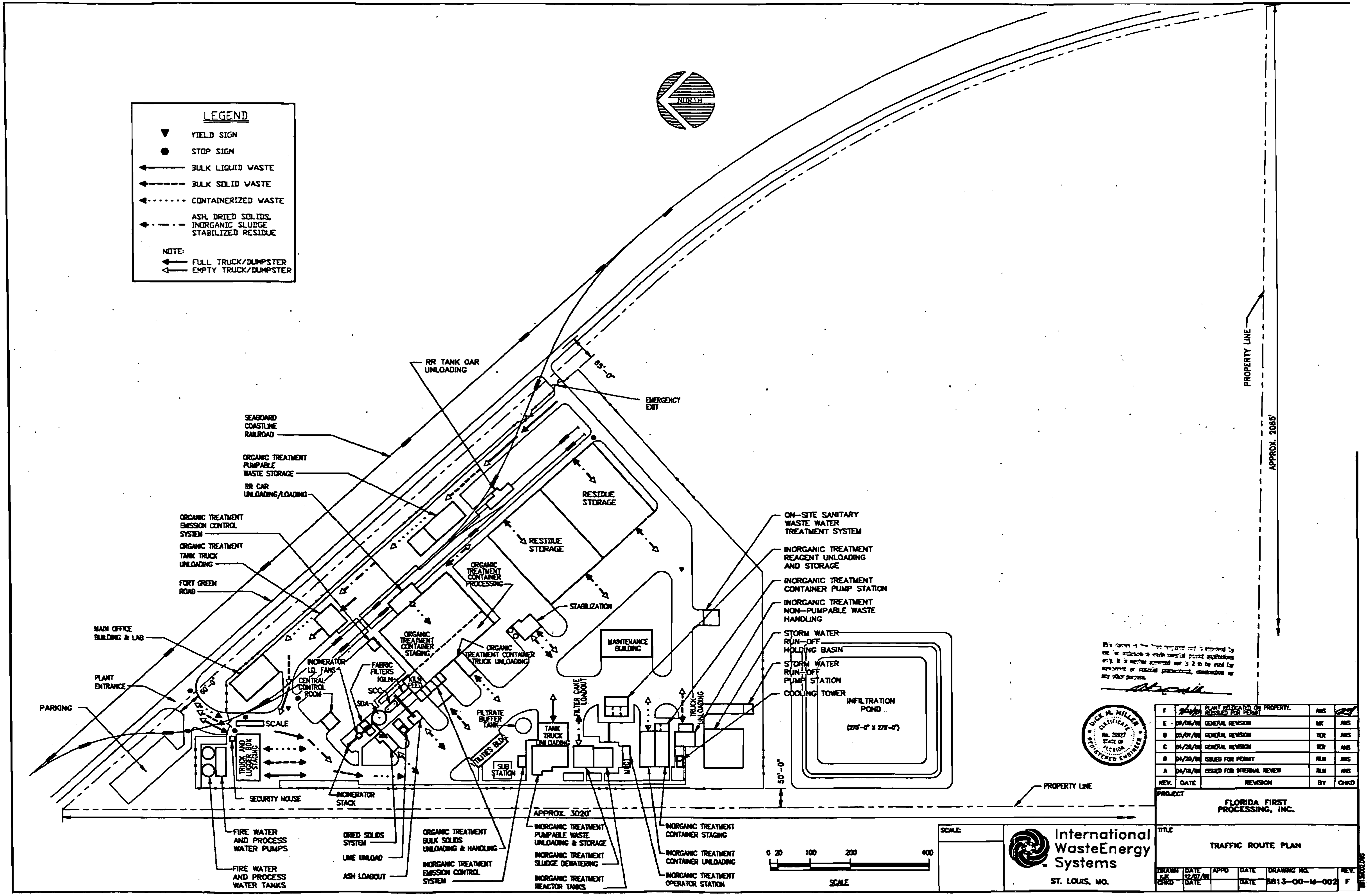

[illegible] only. It is neither approved nor is it to be used for equipment or material procurement, construction or any other purpose.

DICK M. MILLER
No. 32827

REV.	DATE	REVISION	BY	CHKD
F	9/24/89	PLANT RELOCATED ON PROPERTY. REISSUED FOR PERMIT	ANS	
E	09/08/88	GENERAL REVISION	MK	ANS
D	05/01/88	GENERAL REVISION	TER	ANS
C	04/28/88	GENERAL REVISION	TER	ANS
B	04/20/88	ISSUED FOR PERMIT	RLM	ANS
A	04/18/88	ISSUED FOR INTERNAL REVIEW	RLM	ANS

SCALE:

International WasteEnergy Systems
ST. LOUIS, MO.

PROJECT
FLORIDA FIRST PROCESSING, INC.

TITLE
TRAFFIC ROUTE PLAN

DRAWN	DATE	APPD	DATE	DRAWING NO.	REV.
KJK	12/07/88				
CHKD	DATE		DATE	8813-00-M-002	F

EMERGENCY EQUIPMENT LOCATION LEGEND

- Ⓐ SPILL EQUIPMENT
- Ⓑ NOT USED
- Ⓒ NOT USED
- Ⓓ NOT USED
- Ⓔ TELEPHONES
- Ⓕ PLANT-WIDE PUBLIC ADDRESS SYSTEM
- Ⓖ GENERATOR
- Ⓗ DUMPSTER TRUCKS
- Ⓘ FORKLIFT TRUCKS
- Ⓙ HALON FIRE SUPRESSION
- Ⓚ PORTABLE AIR HORN
- Ⓛ PORTABLE PUBLIC ADDRESS SYSTEM
- Ⓜ FIRE EXTINGUISHERS
- Ⓝ NOT USED
- Ⓞ NOT USED
- Ⓟ SCBA (SELF CONTAINED BREATHING APPARATUS)
- Ⓠ SPRINKLER SYSTEMS
- Ⓡ RADIOS
- Ⓢ FIRE CALL BOXES
- Ⓣ HOSE HOUSE
- Ⓤ FIRST AID SUPPLIES
- Ⓥ PERMANENT FIRE MONITOR
- Ⓦ FIRE HYDRANT
- Ⓧ PROTECTIVE CLOTHING AND EQUIPMENT
- Ⓨ EYEWASH & SAFETY SHOWER

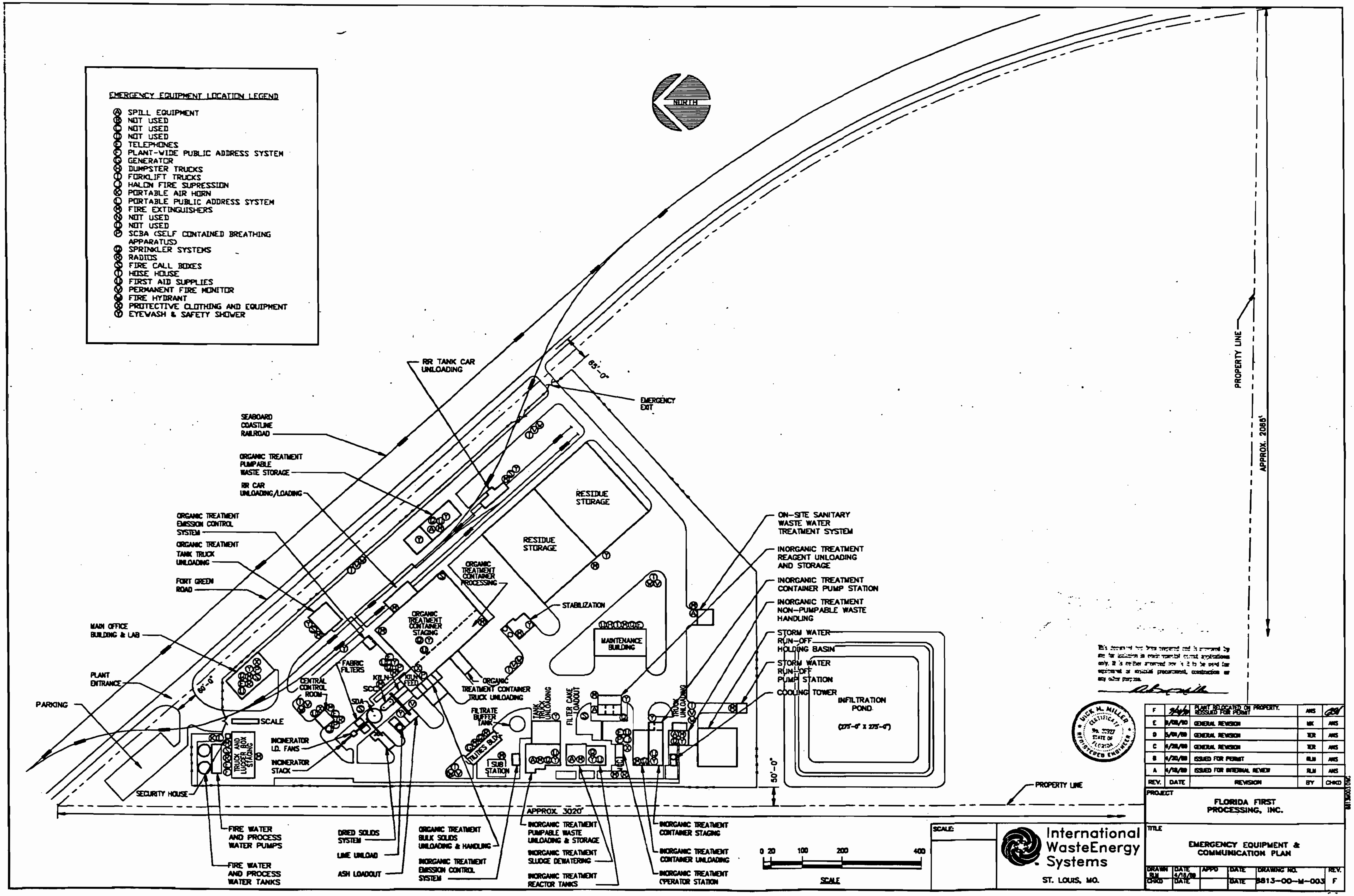

This document has been prepared and is approved by me for inclusion in environmental permit applications only. It is neither approved nor is it to be used for equipment or material procurement, construction or any other purpose.

DICK M. MILLER
STATE OF FLORIDA

REV.	DATE	REVISION	BY	CHKD
F	9/4/90	PLANT RELOCATED ON PROPERTY. REISSUED FOR PERMIT	ANS	
E	9/08/90	GENERAL REVISION	MK	ANS
D	5/01/89	GENERAL REVISION	TER	ANS
C	4/28/89	GENERAL REVISION	TER	ANS
B	4/20/89	ISSUED FOR PERMIT	RLM	ANS
A	4/18/89	ISSUED FOR INTERNAL REVIEW	RLM	ANS

SCALE:

International WasteEnergy Systems
ST. LOUIS, MO.

PROJECT
FLORIDA FIRST PROCESSING, INC.

TITLE
EMERGENCY EQUIPMENT & COMMUNICATION PLAN

DRAWN	DATE	APPD	DATE	DRAWING NO.	REV.
RLM	4/18/89				
CHKD	DATE		DATE	8813-00-M-003	F

8813003.DWG

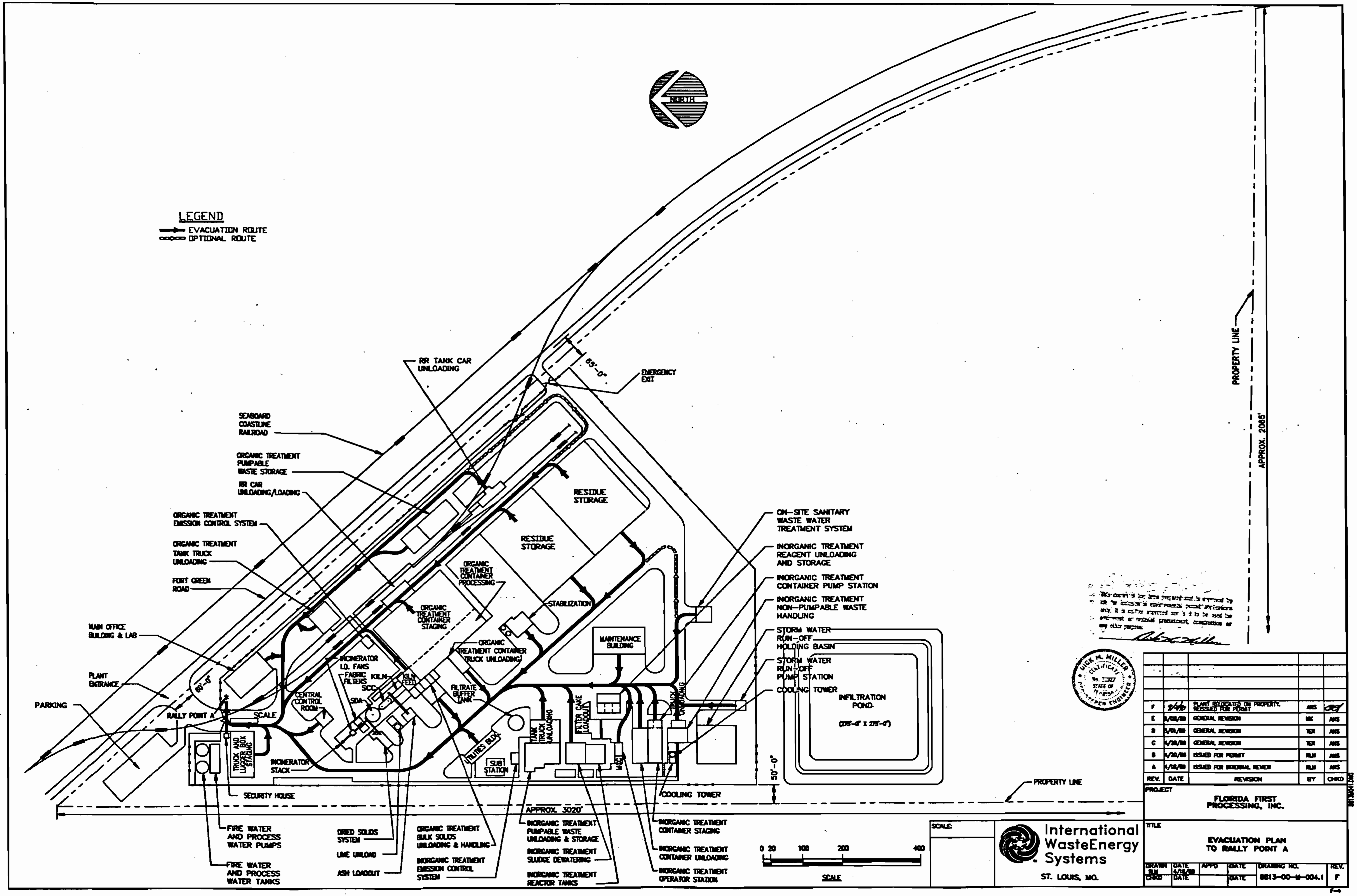

This document has been prepared and is approved by me for inclusion in environmental permit applications only. It is neither approved nor is it to be used for procurement or material procurement, construction or any other purpose.

DICK M. MILLER

REV.	DATE	REVISION	BY	CHKD
F	[illegible]	PLANT RELOCATED ON PROPERTY. REISSUED FOR PERMIT	AHS	[illegible]
E	[illegible]	GENERAL REVISION	MK	AHS
D	[illegible]	GENERAL REVISION	TER	AHS
C	[illegible]	GENERAL REVISION	TER	AHS
B	[illegible]	ISSUED FOR PERMIT	RLM	AHS
A	[illegible]	ISSUED FOR INTERNAL REVIEW	RLM	AHS

SCALE:

International WasteEnergy Systems
ST. LOUIS, MO.

PROJECT
FLORIDA FIRST PROCESSING, INC.

TITLE
EVACUATION PLAN TO RALLY POINT A

DRAWN	DATE	APPD	DATE	DRAWING NO.	REV.
RLM	[illegible]			8813-00-M-004.1	F
CHKD	DATE		DATE		

F-4

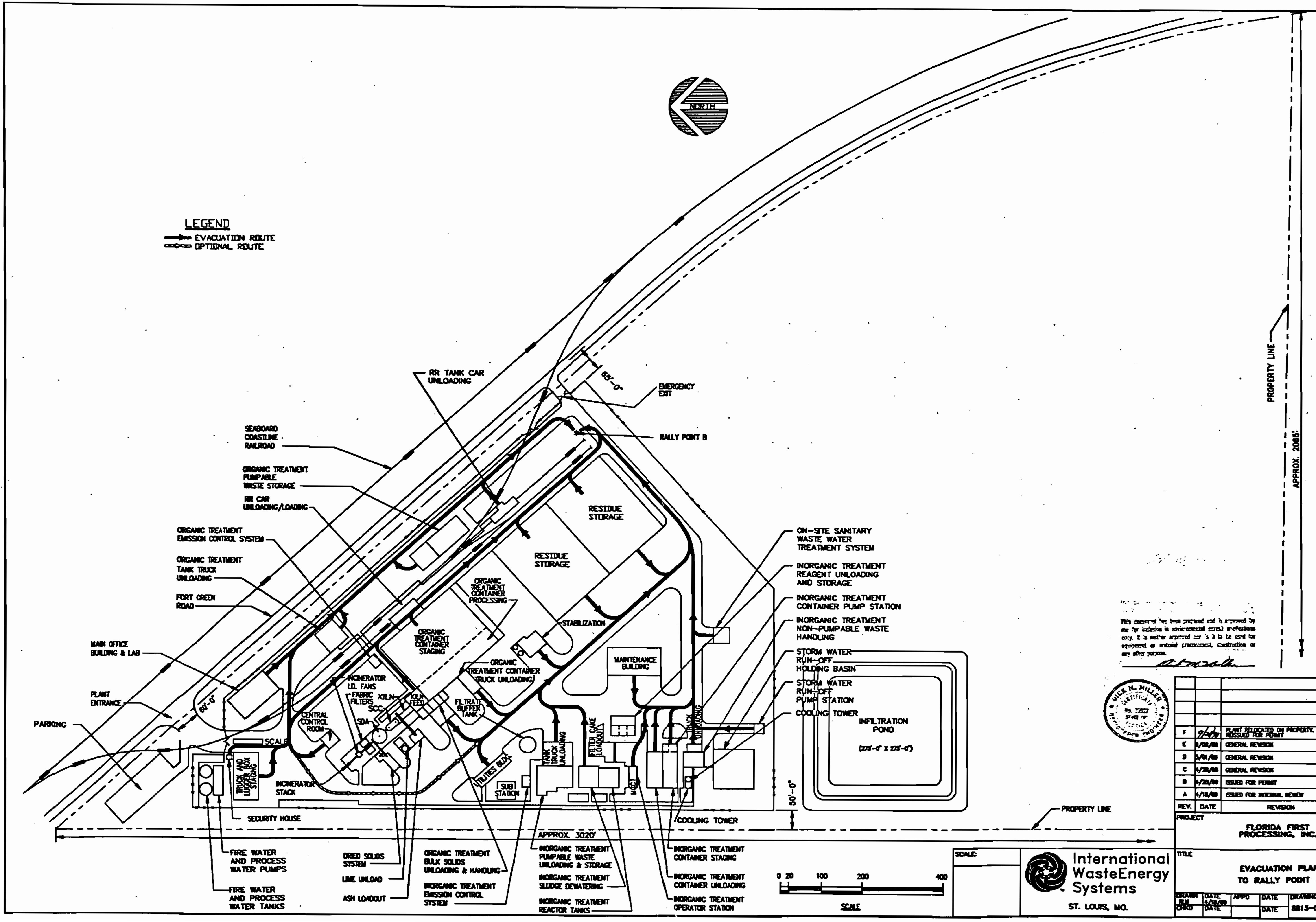

This document has been prepared and is approved by me for inclusion in environmental permit applications only. It is neither approved nor is it to be used for equipment or material procurement, construction or any other purpose.

DICK M. MILLER

REV.	DATE	REVISION	BY	CHKD
F	[illegible]	PLANT RELOCATED ON PROPERTY. REISSUED FOR PERMIT	ANS	[illegible]
E	[illegible]/08/88	GENERAL REVISION	MK	ANS
D	5/04/88	GENERAL REVISION	TER	ANS
C	4/28/88	GENERAL REVISION	TER	ANS
B	4/20/88	ISSUED FOR PERMIT	RLM	ANS
A	4/18/88	ISSUED FOR INTERNAL REVIEW	RLM	ANS

SCALE:

International WasteEnergy Systems
ST. LOUIS, MO.

PROJECT
FLORIDA FIRST PROCESSING, INC.

TITLE
EVACUATION PLAN TO RALLY POINT B

DRAWN	DATE	APPD	DATE	DRAWING NO.	REV.
RLM	4/18/88			8813-00-M-004.2	F
CHKD	DATE		DATE		

F-4

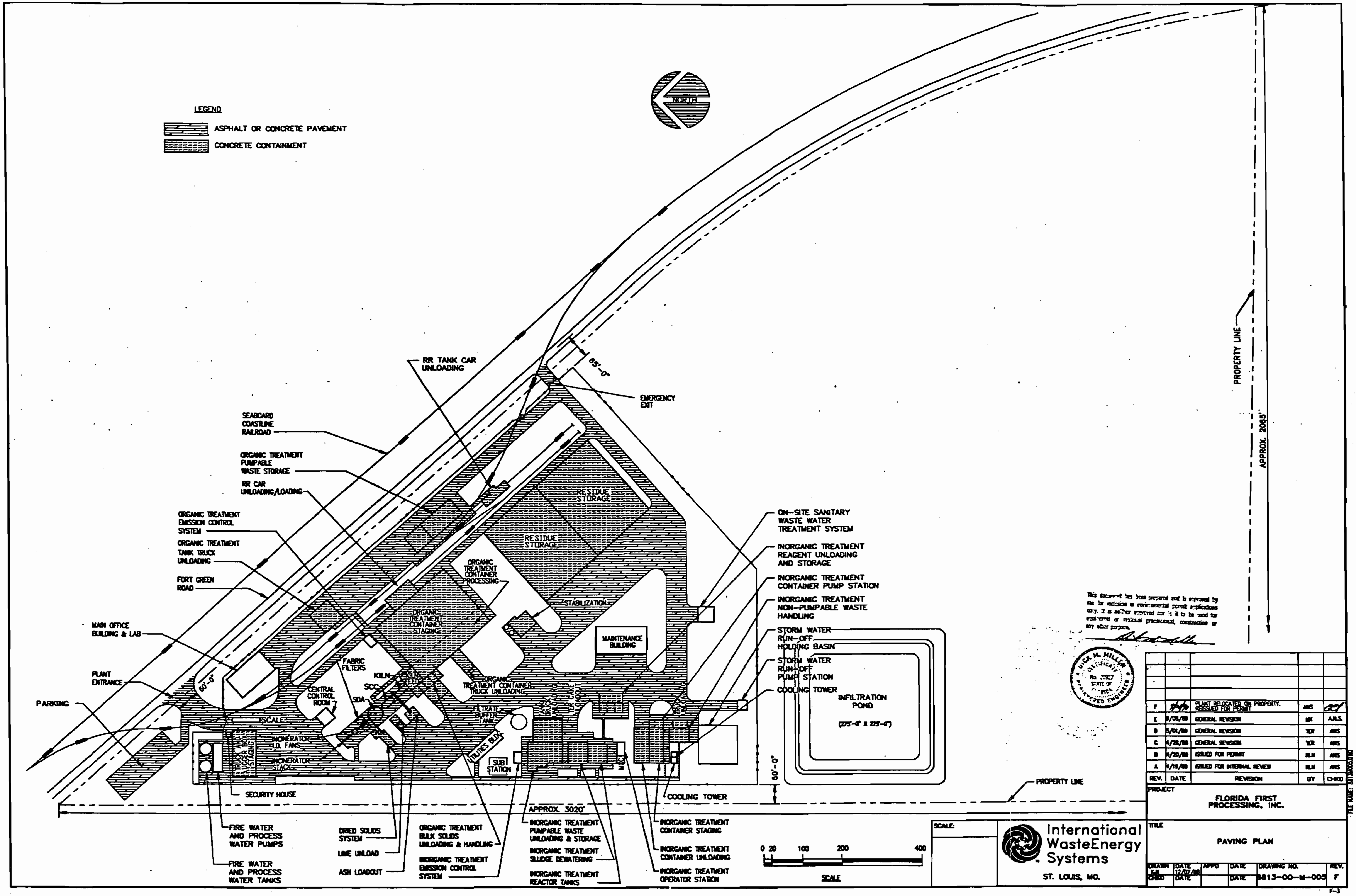

This document has been prepared and is approved by me for inclusion in environmental permit applications only. It is neither approved nor is it to be used for equipment or material procurement, construction or any other purpose.

DICK M. MILLER CERTIFICATE No. 22927 STATE OF FLORIDA REGISTERED ENGINEER

REV.	DATE	REVISION	BY	CHKD
F		PLANT RELOCATED ON PROPERTY. REISSUED FOR PERMIT	ANS	
E	9/08/88	GENERAL REVISION	MK	AJLS.
D	5/01/88	GENERAL REVISION	TER	ANS
C	4/28/88	GENERAL REVISION	TER	ANS
B	4/20/88	ISSUED FOR PERMIT	RLM	ANS
A	4/19/88	ISSUED FOR INTERNAL REVIEW	RLM	ANS

SCALE:

International WasteEnergy Systems
ST. LOUIS, MO.

PROJECT
FLORIDA FIRST
PROCESSING, INC.

TITLE
PAVING PLAN

DRAWN	DATE	APPD	DATE	DRAWING NO.	REV.
KJK	12/07/88				
CHKD	DATE		DATE	8813-00-M-005	F

FILE NAME: 8813M005.DWG

F-3

Item #	Source(s)	Control Device	Emission Point	Applicable Air Permit
1	Hazardous Waste Incinerator and Associated Storage/Handling Units	SDA/Fabric Filter	Incinerator Stack	Hazardous Waste Incinerator Stack
2	Inorganic Waste Treatment System Reagent Storage Area	Caustic Wet Scrubber	Scrubber Stack	Inorganic Waste Treatment System
3	Organic Liquid Tank Truck Unloading Area	Tank Truck Unloading Area Carbon Adsorber	Carbon Adsorber Vent	Tank Truck Unloading Area
4	Organic Liquid Rail Car Unloading Area	RR Tank Car Unloading Area Carbon Adsorber	Carbon Adsorber Vent	RR Tank Car Unloading Area
5	Organic Liquid Storage Tanks	Rotary Kiln/SCC or Organic Treatment Emission Control System	Incinerator Stack or Organic Treatment Emission Control System	Organic Liquid Storage Tanks
6	Organic Solids Storage Area	Rotary Kiln/SCC or Organic Treatment Emission Control System	Incinerator Stack or Organic Treatment Emission Control System	Organic Bulk Solids Handling Area
7	Lime Storage Silo	Lime Storage Silo Fabric Filter	Fabric Filter Vent	Lime Storage Silo
8	Cement Storage Silo	Cement Storage Silo Fabric Filter	Fabric Filter Vent	Cement Storage Silo
9	Cement Day Silo	Cement Day Silo Fabric Filter	Fabric Filter Vent	Cement Day Silo
10	Flyash Storage Silo	Flyash Storage Silo Fabric Filter	Fabric Filter Vent	Flyash Storage Silo
11	Flyash Day Silo	Flyash Day Silo Fabric Filter	Fabric Filter Vent	Flyash Day Silo
12	Recycle Solids Storage Silo	Recycle Solids Storage Silo Fabric Filter	Fabric Filter Vent	Recycle Solids Storage Silo
13	Dried Solids Storage Silo	Dried Solids Storage Silo Fabric Filter	Fabric Filter Vent	Dry Solids Storage Silo
14	Steam Boiler	Uncontrolled	Boiler Stack	Steam Boiler
15	Emergency Firewater Pump	Uncontrolled	Diesel Engine Exhaust Pipe	Backup Diesel Powered Firewater Pump
16	Emergency Power Generator	Uncontrolled	Diesel Engine Exhaust Pipe	Backup Diesel Generator
17	Fuel Oil Tank	Uncontrolled	Tank Vent	#2 Fuel Oil Storage Tank
18	Stabilization Mixer and Flyash/Cement Weigh Gate	Weigh Hopper Fabric Filter	Fabric Filter Vent	Stabilization Mixer and Flyash/Cement Weigh Hopper
18a	Lime Slakers	Wet Scrubber	Slaker Vent	Lime Slakers

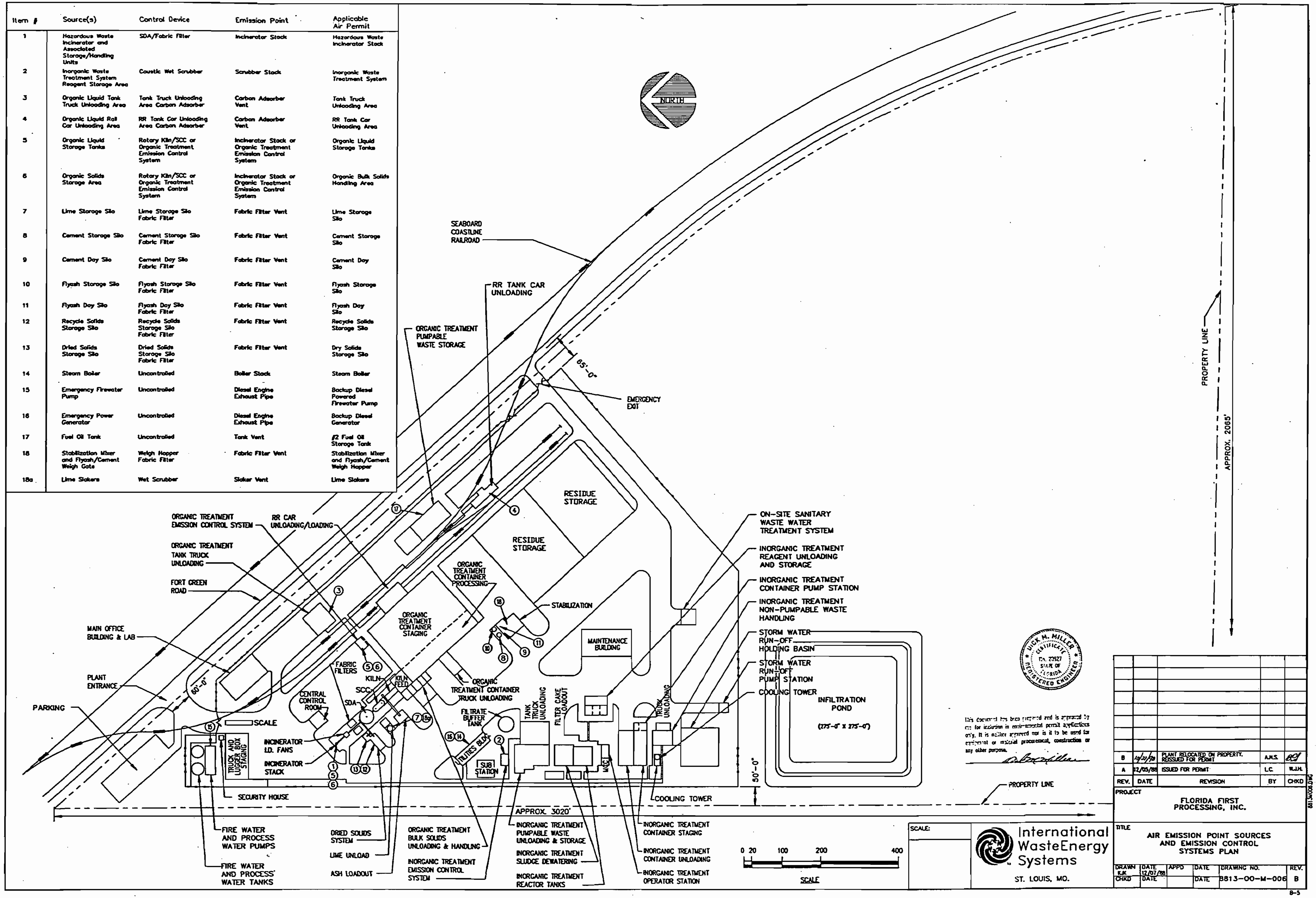

DICK M. MILLER No. 23927

This document has been prepared and is approved by me for inclusion in environmental permit applications only. It is neither approved nor is it to be used for equipment or material procurement, construction or any other purpose.

REV.	DATE	REVISION	BY	CHKD
B	10/21/90	PLANT RELOCATED ON PROPERTY. REISSUED FOR PERMIT	A.N.S.	BG
A	12/05/88	ISSUED FOR PERMIT	L.C.	W.J.H.

PROJECT
FLORIDA FIRST
PROCESSING, INC.

SCALE:

International
WasteEnergy
Systems
ST. LOUIS, MO.

TITLE
AIR EMISSION POINT SOURCES
AND EMISSION CONTROL
SYSTEMS PLAN

DRAWN	DATE	APPD	DATE	DRAWING NO.	REV.
K.JK	12/07/88				
CHKD	DATE		DATE	8813-00-M-006	B

8813M006.DWG

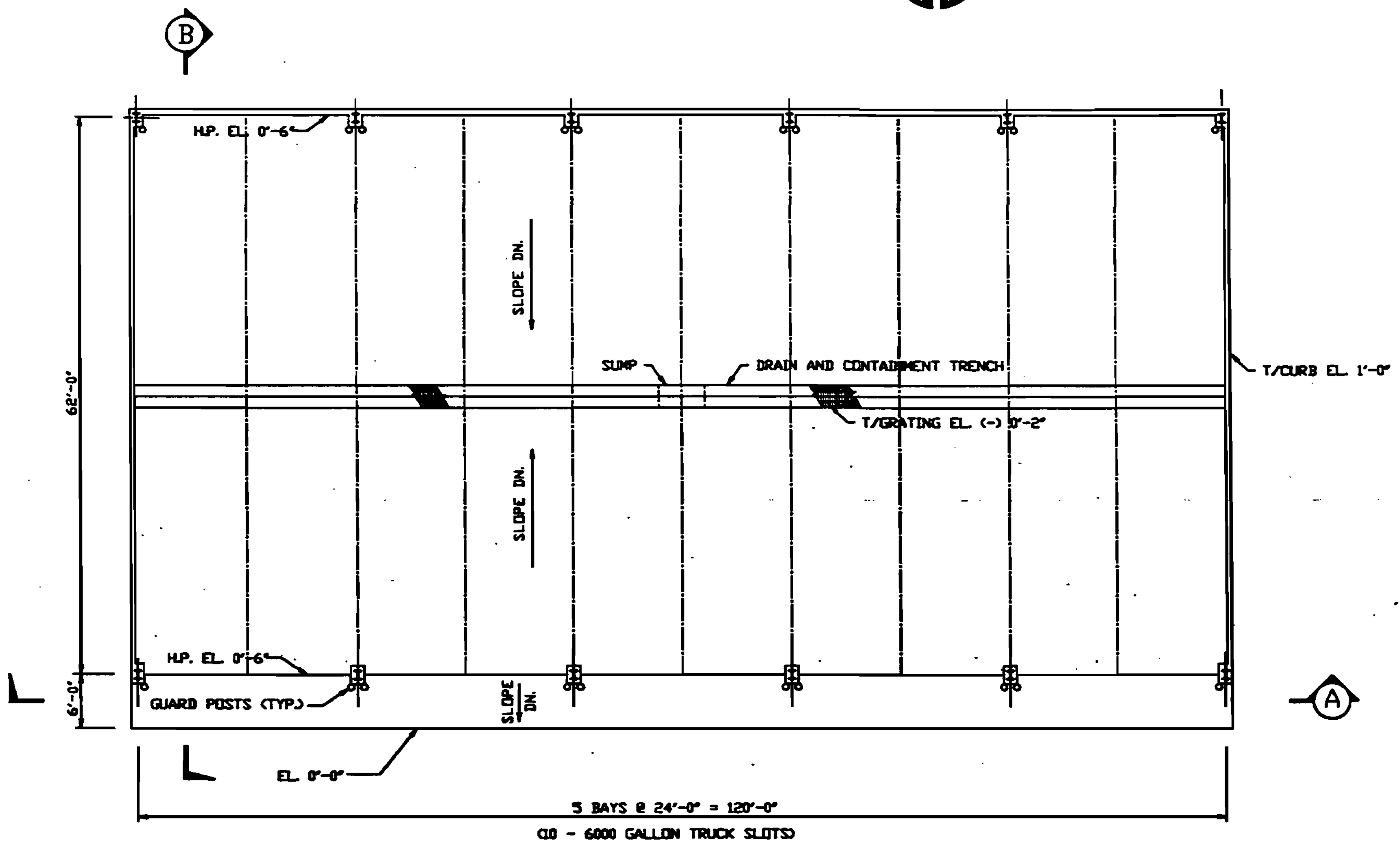

PLAN

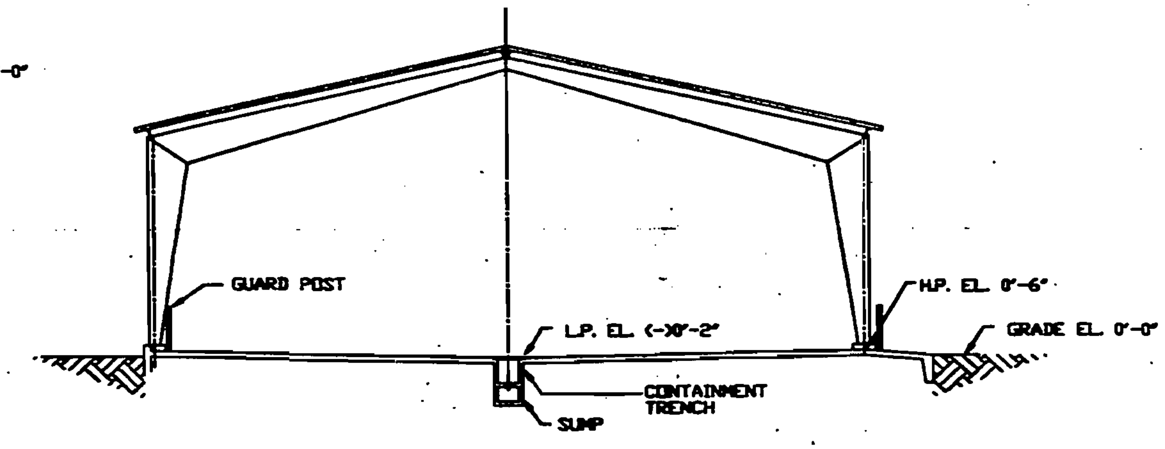

SECTION B

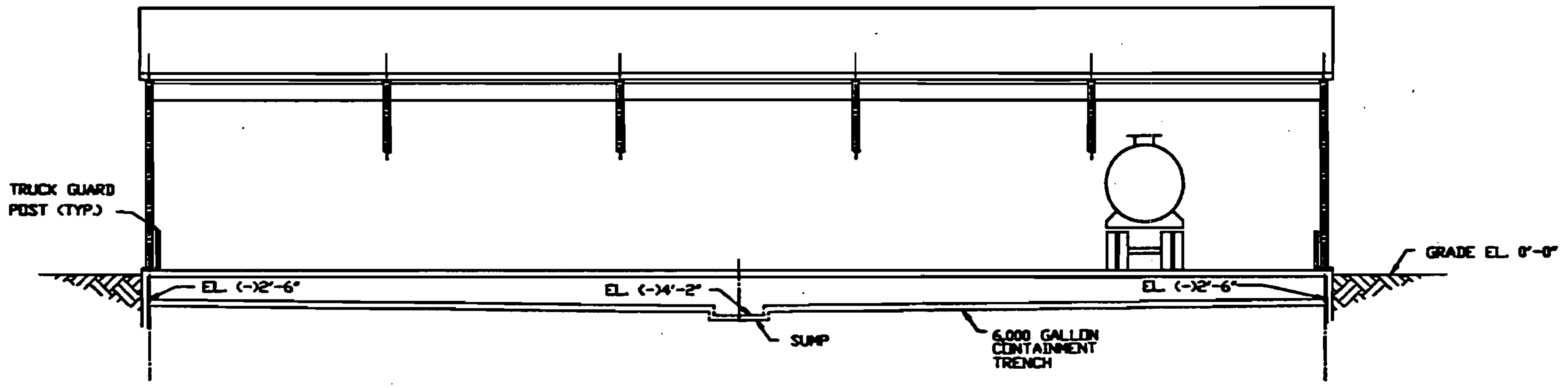

SECTION A

0 4' 8' 16'
SCALE

NICK H. MILLER
CERTIFICATE No. 27927
STATE OF FLORIDA

This document has been prepared and is approved by me for inclusion in environmental permit applications only. It is neither approved nor is it to be used for equipment or material procurement, construction or any other purpose.

REV.	DATE	REVISION	BY	CHK'D
E	[illegible]	REVISED AND REISSUED FOR PERMIT	A.J.S.	[illegible]
D	9/08/89	GENERAL REVISION	N.K.	W.J.H.
C	4/17/89	ISSUED FOR PERMIT	N.K.	W.J.H.
B	3/3/89	ISSUED FOR CLIENT REVIEW	N.K.	W.J.H.
A	12/20/88	ISSUED FOR INTERNAL REVIEW	N.K.	W.J.H.

PROJECT
FLORIDA FIRST
PROCESSING, INC.

SCALE:

International
WasteEnergy
Systems
ST. LOUIS, MO.

TITLE
GENERAL ARRANGEMENT
TRUCK AND LUGGER BOX STAGING
PLAN AND SECTIONS

DRAWN	DATE	APP'D	DATE	DRAWING NO.	REV.
N.K.	12/15/88			8813-00-M-010	E
CHK'D	DATE		DATE		

E-3

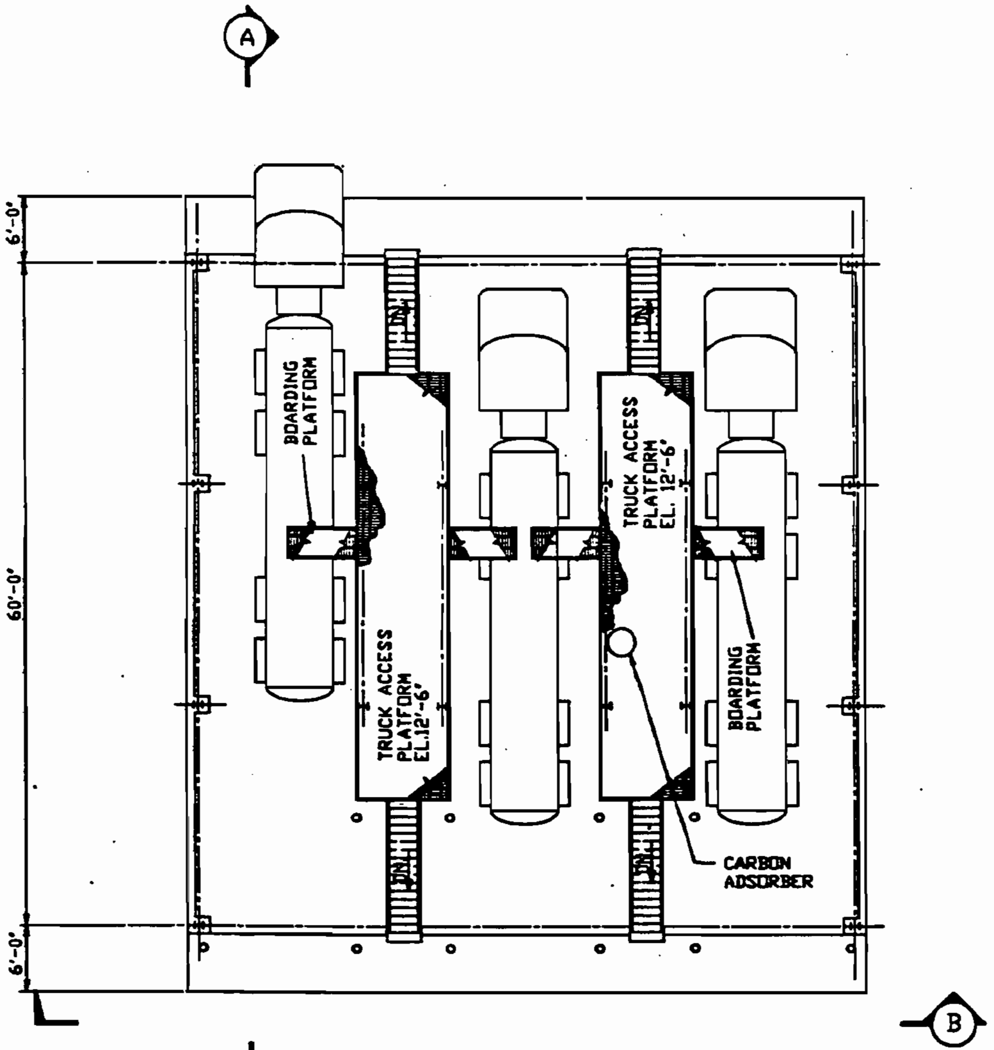

UPPER PLAN

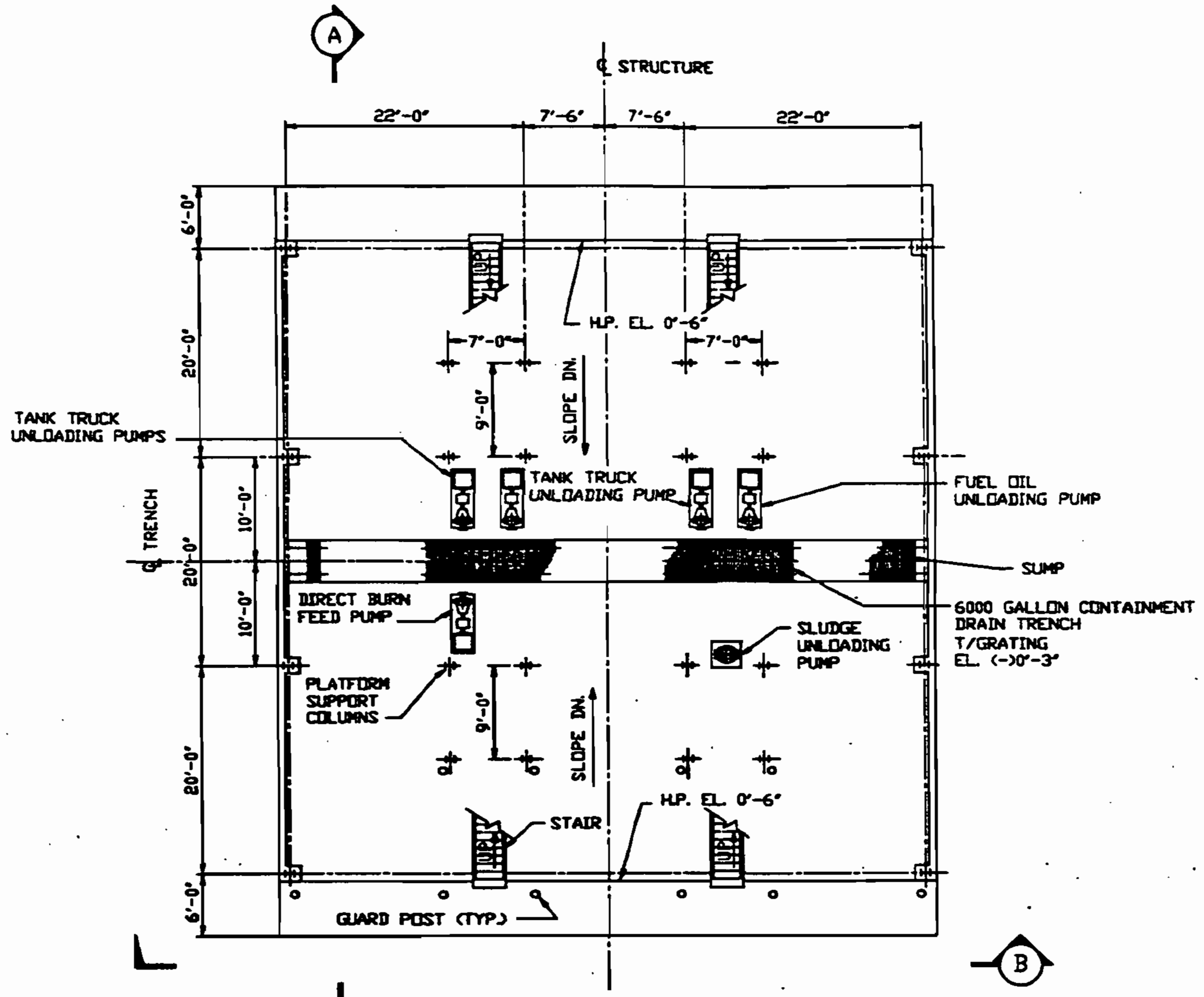

GROUND FLOOR PLAN

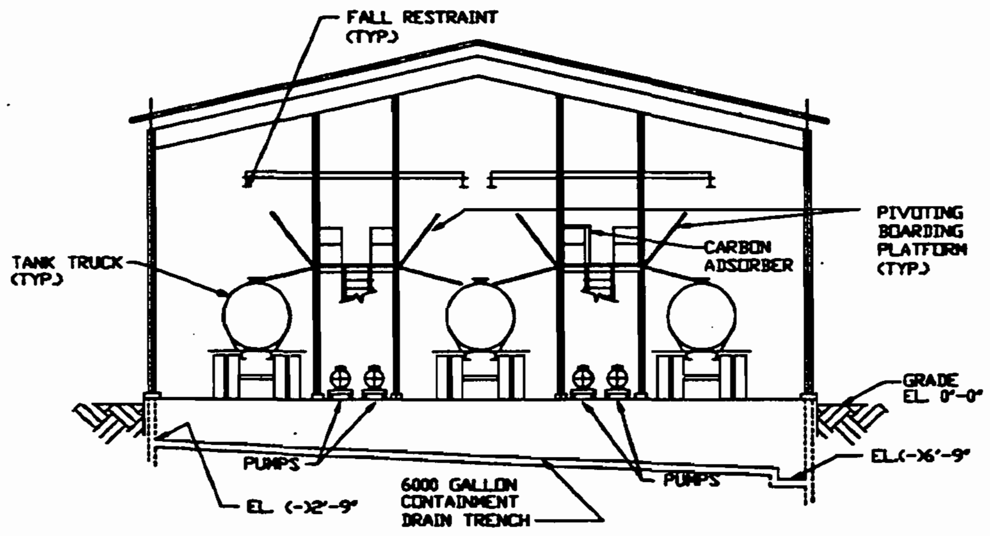

SECTION (B)

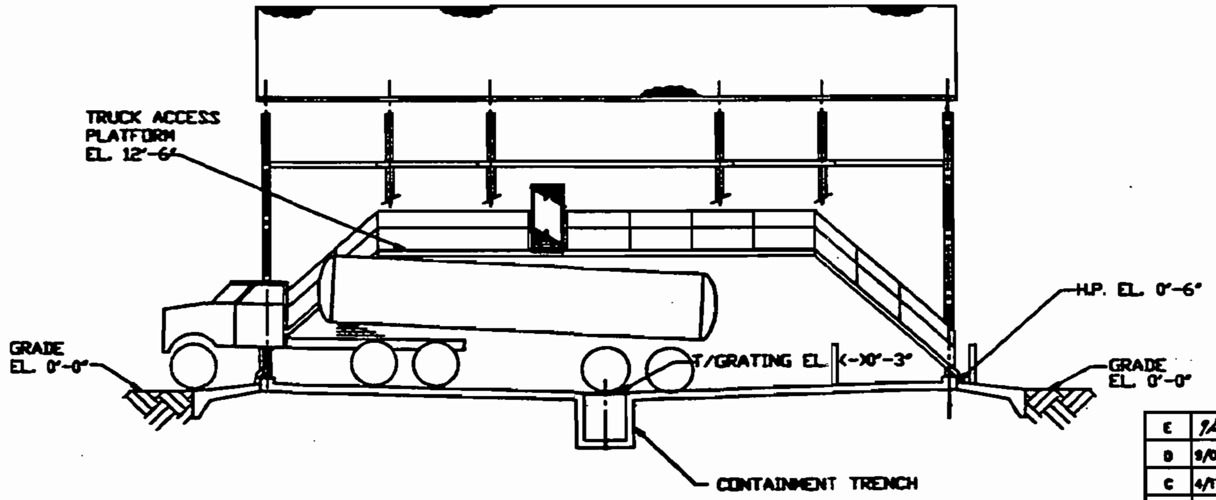

SECTION (A)

0 4' 8' 16'
SCALE

DICK M. MILLER
No. 20927
STATE OF FLORIDA

This document has been prepared and is approved by me for inclusion in environmental permit applications only. It is neither approved nor is it to be used for equipment or material procurement, construction or any other purpose.

REV.	DATE	REVISION	BY	CHKD
E	[illegible]	REVISED AND REISSUED FOR PERMIT	A.M.S.	[illegible]
D	9/08/89	GENERAL REVISION	M.K.	W.J.M.
C	4/17/89	ISSUED FOR PERMIT	M.K.	W.J.M.
B	2/10/89	ISSUED FOR CLIENT REVIEW	M.K.	W.J.M.
A	12/20/88	ISSUED FOR INTERNAL REVIEW	M.K.	W.J.M.

PROJECT
FLORIDA FIRST
PROCESSING, INC.

TITLE
GENERAL ARRANGEMENT
ORGANIC TREATMENT
TANK TRUCK UNLOADING
PLANS & SECTIONS

SCALE:

International
WasteEnergy
Systems
ST. LOUIS, MO.

DRAWN	DATE	APPD	DATE	DRAWING NO.	REV.
M.K.	12/16/88			8813-00-M-011	E
CHKD	DATE		DATE		

FILE NAM 9313\8813M011

E-3

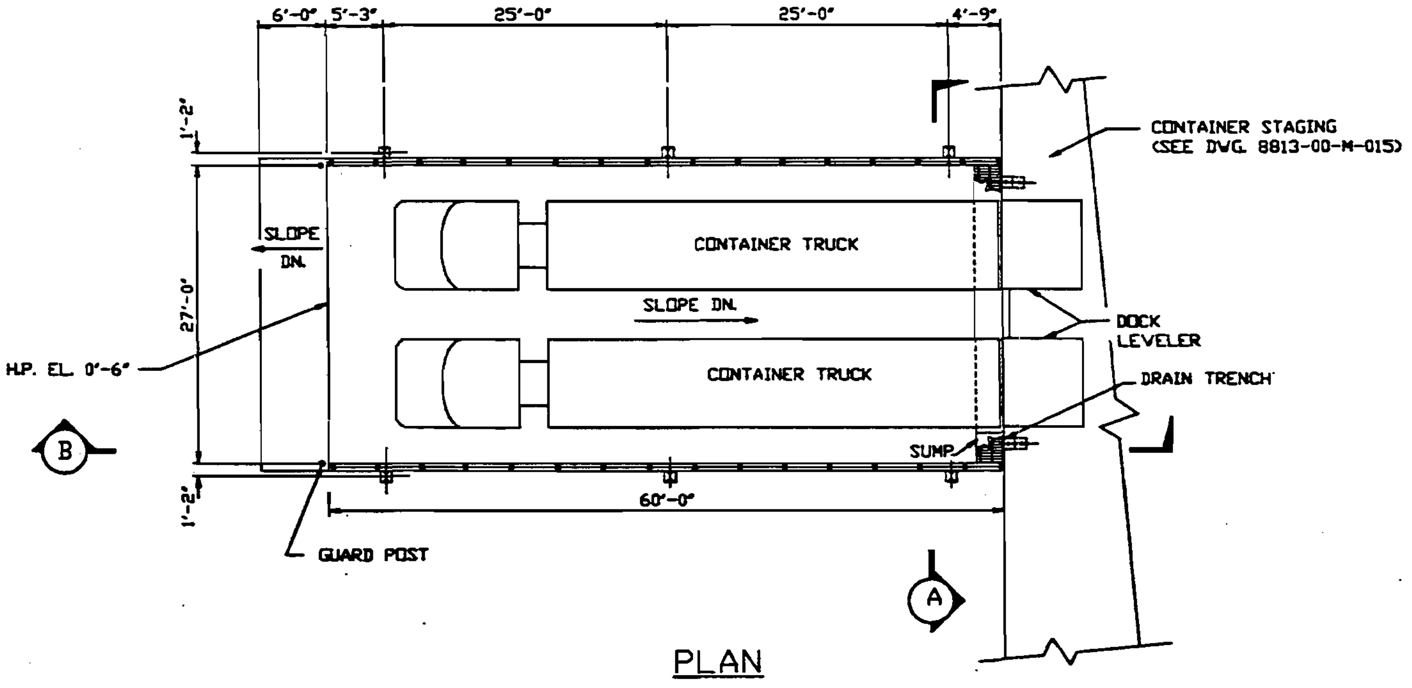

PLAN

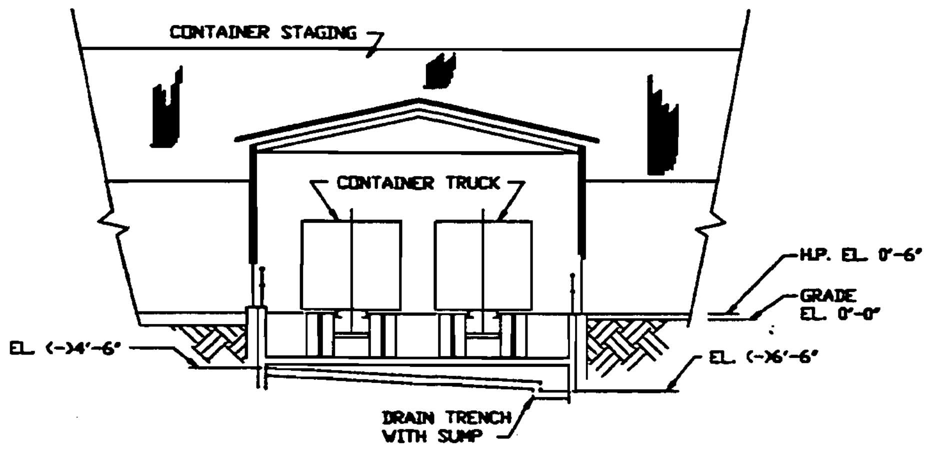

SECTION Ⓐ

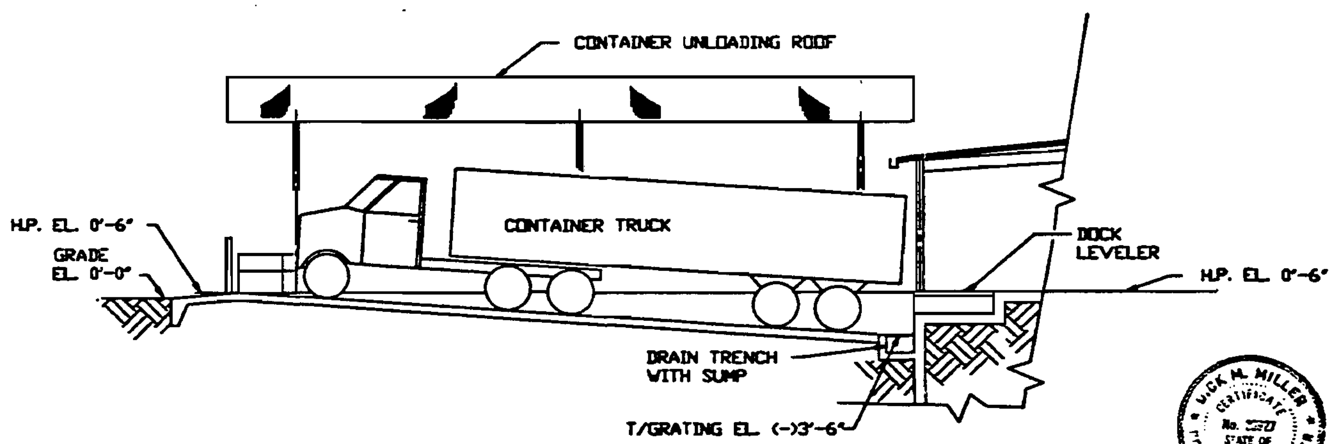

SECTION Ⓑ

0 4' 8' 16'
SCALE

MILLER
No. [illegible]

This document has been prepared and is approved by me for inclusion in environmental permit applications only. It is neither approved nor is it to be used for equipment or material procurement, construction or any other purpose.

REV.	DATE	REVISION	BY	CHKD
F	[illegible]	REVISED AND REISSUED FOR PERMIT	A.H.S.	[illegible]
E	9/08/89	GENERAL REVISION	J.B.	W.J.H.
D	5/01/89	CIVIL REVISION & REISSUED FOR PERMIT	T.R.	W.J.H.
C	4/17/89	ISSUED FOR PERMIT	M.K.	W.J.H.
B	2/10/89	ISSUED FOR CLIENT REVIEW	M.K.	W.J.H.
A	12/20/88	ISSUED FOR INTERNAL REVIEW	M.K.	W.J.H.

PROJECT
FLORIDA FIRST
PROCESSING, INC.

TITLE
GENERAL ARRANGEMENT
ORGANIC TREATMENT
CONTAINER TRUCK UNLOADING
PLAN AND SECTIONS

SCALE:

International
WasteEnergy
Systems
ST. LOUIS, MO.

DRAWN	DATE	APPD	DATE	DRAWING NO.	REV.
M.K.	12/14/88				
CHKD	DATE		DATE	8813-00-M-012	F

F-4

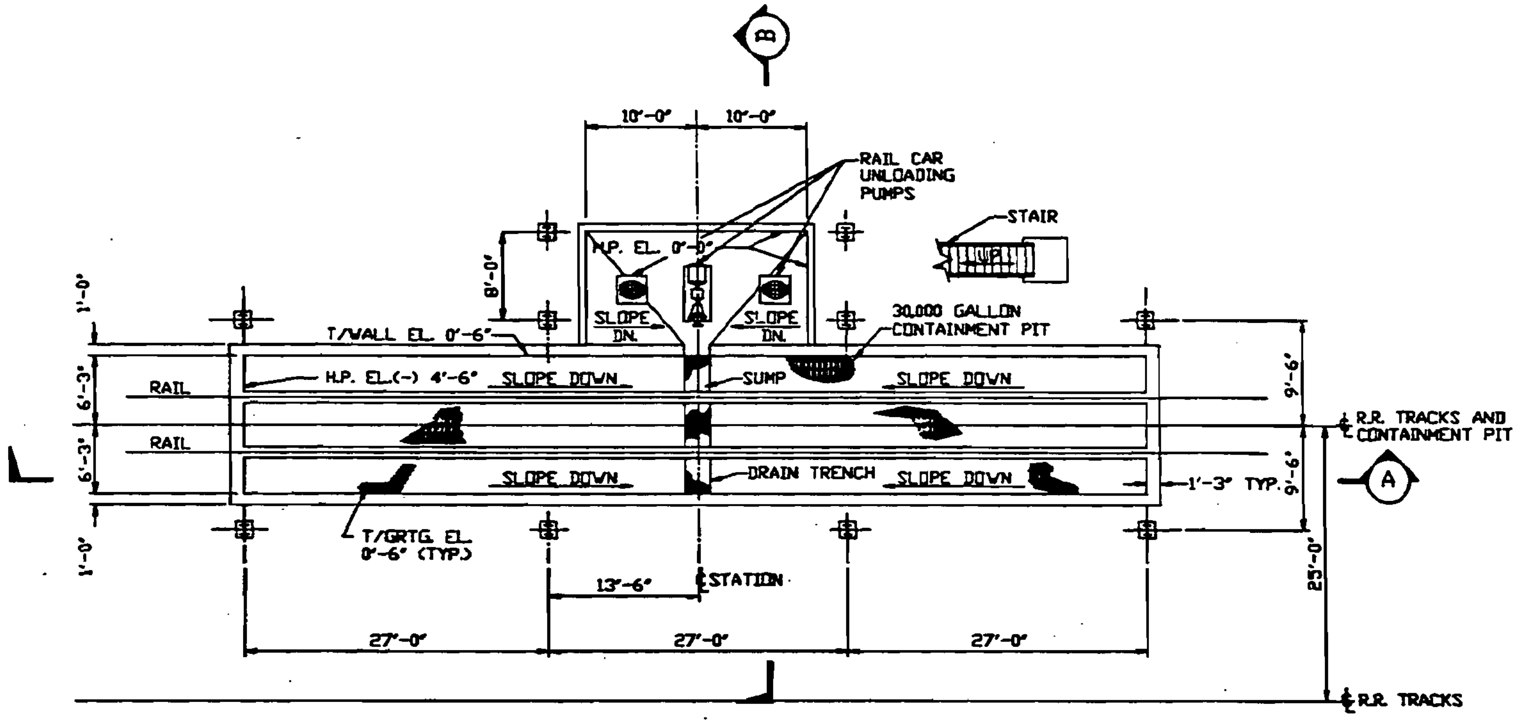

PLAN

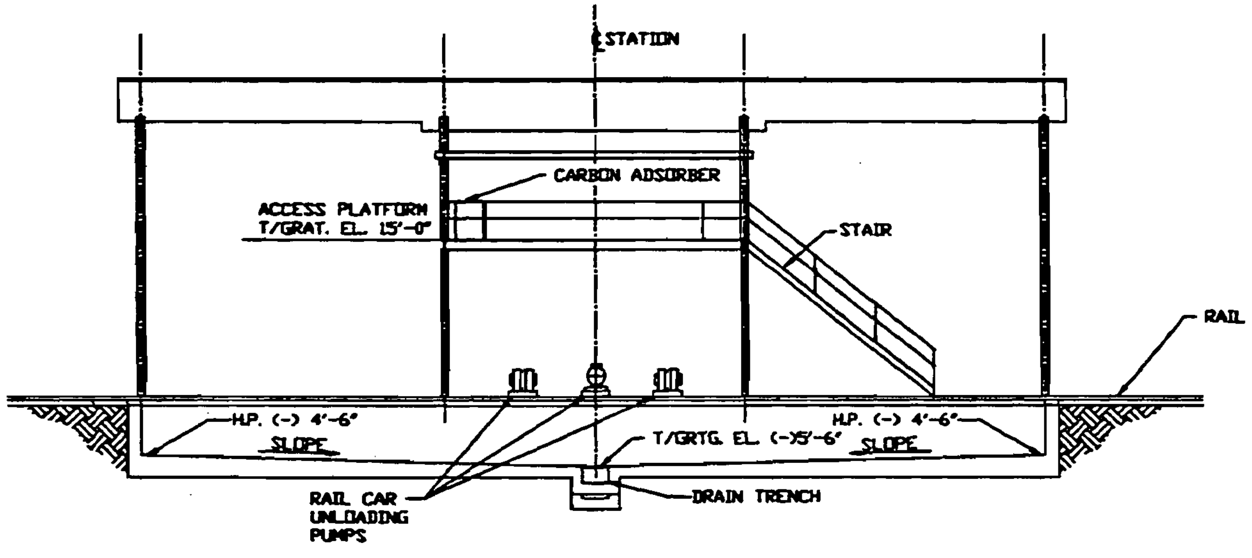

SECTION (A)

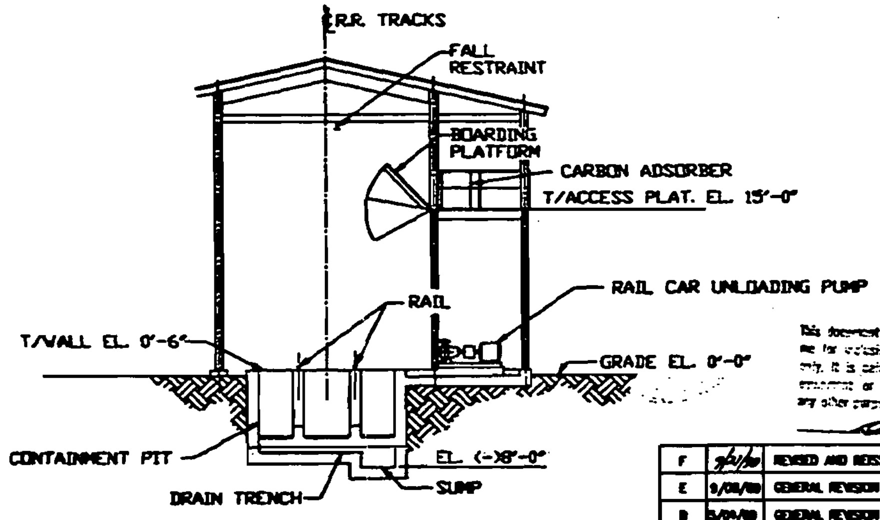

SECTION (B)

This document has been prepared and is approved by me for inclusion in environmental permit applications only. It is neither approved nor is it to be used for [illegible] or material procurement, construction or any other purpose.

0 4' 8' 16'
SCALE

REV.	DATE	REVISION	BY	CHKD
F	9/21/90	REVISED AND REISSUED FOR PERMIT	A.R.S.	[illegible]
E	9/08/89	GENERAL REVISION	J.B.	W.J.H.
D	5/04/89	GENERAL REVISION	T.E.R.	W.J.H.
C	4/17/89	ISSUED FOR PERMIT	W.K.	W.J.H.
B	2/10/89	ISSUED FOR CLIENT REVIEW	W.K.	W.J.H.
A	12/30/88	ISSUED FOR INTERNAL REVIEW	M.J.A.	W.J.H.

PROJECT
FLORIDA FIRST
PROCESSING, INC.

SCALE:

International
WasteEnergy
Systems
ST. LOUIS, MO.

TITLE
GENERAL ARRANGEMENT
RAILROAD TANK CAR UNLOADING

DRAWN	DATE	APPD	DATE	DRAWING NO.	REV.
M.J.A.	12/21/88			8813-00-M-013	F
CHKD	DATE		DATE		

FILE NAME: \8813\8813M013.DWG DATE PLOTTED: 9/18/90

F-4

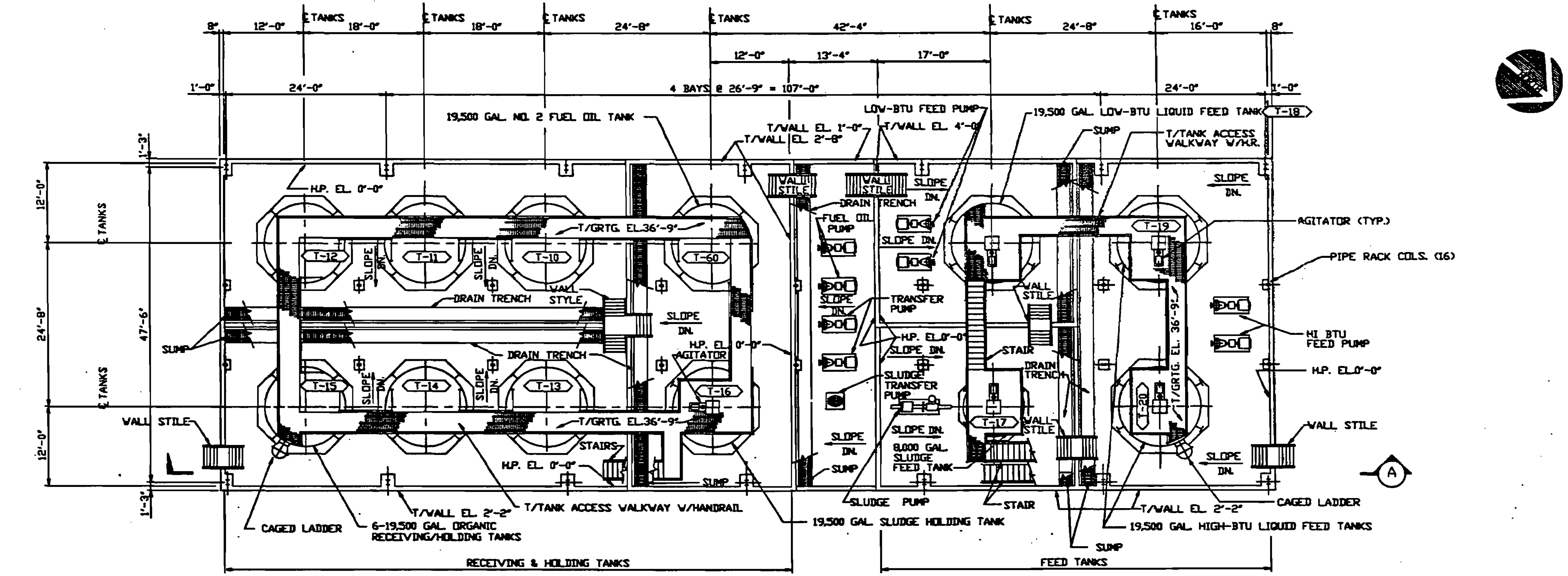

PLAN

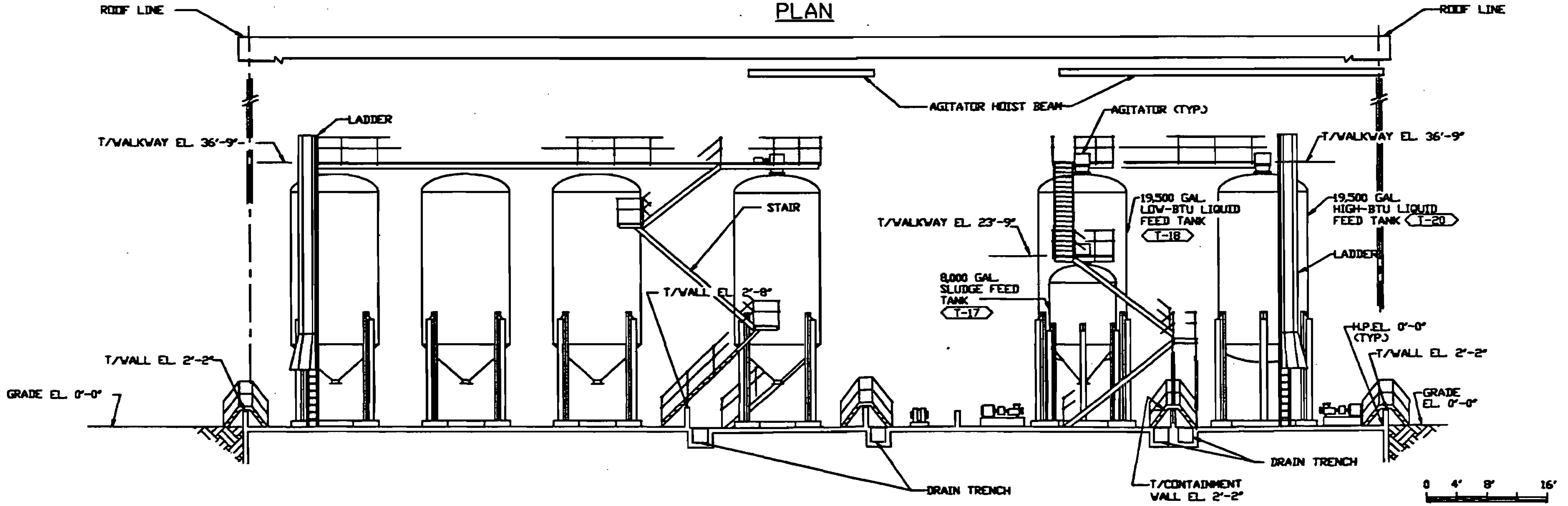

SECTION (A)

0 4' 8' 16'
SCALE

This document has been prepared and is approved by me for inclusion in environmental permit applications only. It is neither intended nor is it to be used for equipment or material procurement, construction or any other purpose.

No. 25927
STATE OF FLORIDA

REV.	DATE	REVISION	BY	CHKD
G	[illegible]	REVISED AND REISSUED FOR PERMIT	A.J.S.	[illegible]
F	[illegible]/22/[illegible]	GENERAL REVISION	A.S.	R.J.H.
E	[illegible]	GENERAL REVISION	J.B.	R.J.H.
D	[illegible]	CIVIL REVISION & REISSUED FOR PERMIT	T.R.	R.J.H.
C	4/17/[illegible]	ISSUED FOR PERMIT	M.K.	R.J.H.
B	2/10/[illegible]	ISSUED FOR CLIENT REVIEW	M.K.	R.J.H.
A	12/22/[illegible]	ISSUED FOR INTERNAL REVIEW	M.K.	R.J.H.

PROJECT
FLORIDA FIRST
PROCESSING, INC.

SCALE:

International
WasteEnergy
Systems
ST. LOUIS, MO.

TITLE
GENERAL ARRANGEMENT
ORGANIC TREATMENT
PUMPABLE WASTE STORAGE
PLAN AND SECTION

DRAWN	DATE	APP'D	DATE	DRAWING NO.	REV.
M.K.	12/20/88			8813-00-M-014	G
CHKD	DATE		DATE		

G-5

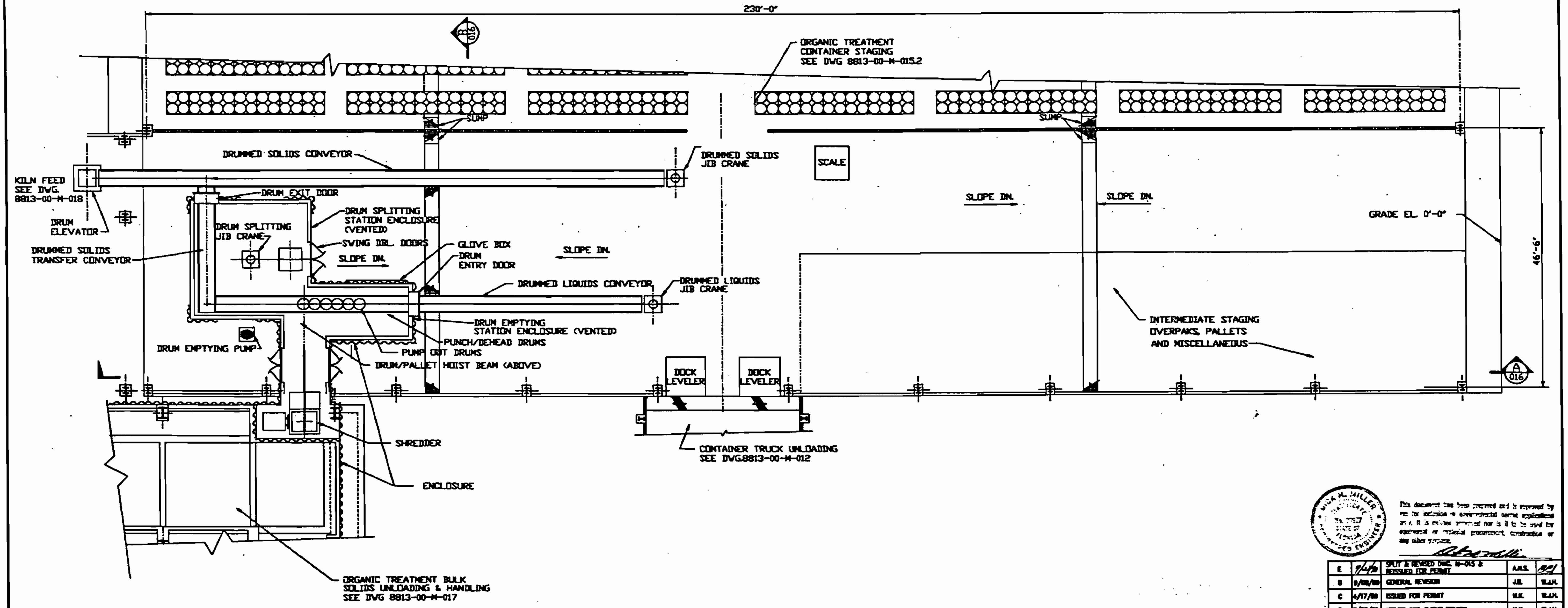

0 4' 8' 16'

SCALE

This document has been prepared and is approved by me for inclusion in environmental permit applications only. It is neither intended nor is it to be used for equipment or material procurement, construction or any other purpose.

REV.	DATE	REVISION	BY	CHKD
E	9/4/90	SPLIT & REVISED DWG. M-015 & REISSUED FOR PERMIT	A.M.S.	[illegible]
D	9/08/89	GENERAL REVISION	J.R.	W.J.H.
C	4/17/89	ISSUED FOR PERMIT	M.K.	W.J.H.
B	3/08/89	ISSUED FOR CLIENT REVIEW	M.K.	W.J.H.
A	12/27/88	ISSUED FOR INTERNAL REVIEW	M.K.	W.J.H.

PROJECT

FLORIDA FIRST
PROCESSING, INC.

SCALE:

International
WasteEnergy
Systems

ST. LOUIS, MO.

TITLE

GENERAL ARRANGEMENT
ORGANIC TREATMENT
CONTAINER PROCESSING
PLAN

DRAWN	DATE	APPD	DATE	DRAWING NO.	REV.
M.K.	1/22/89				
CHKD	DATE		DATE	8813-00-M-015.1	E

FILE NAME: 8813M151.DWG

E-3

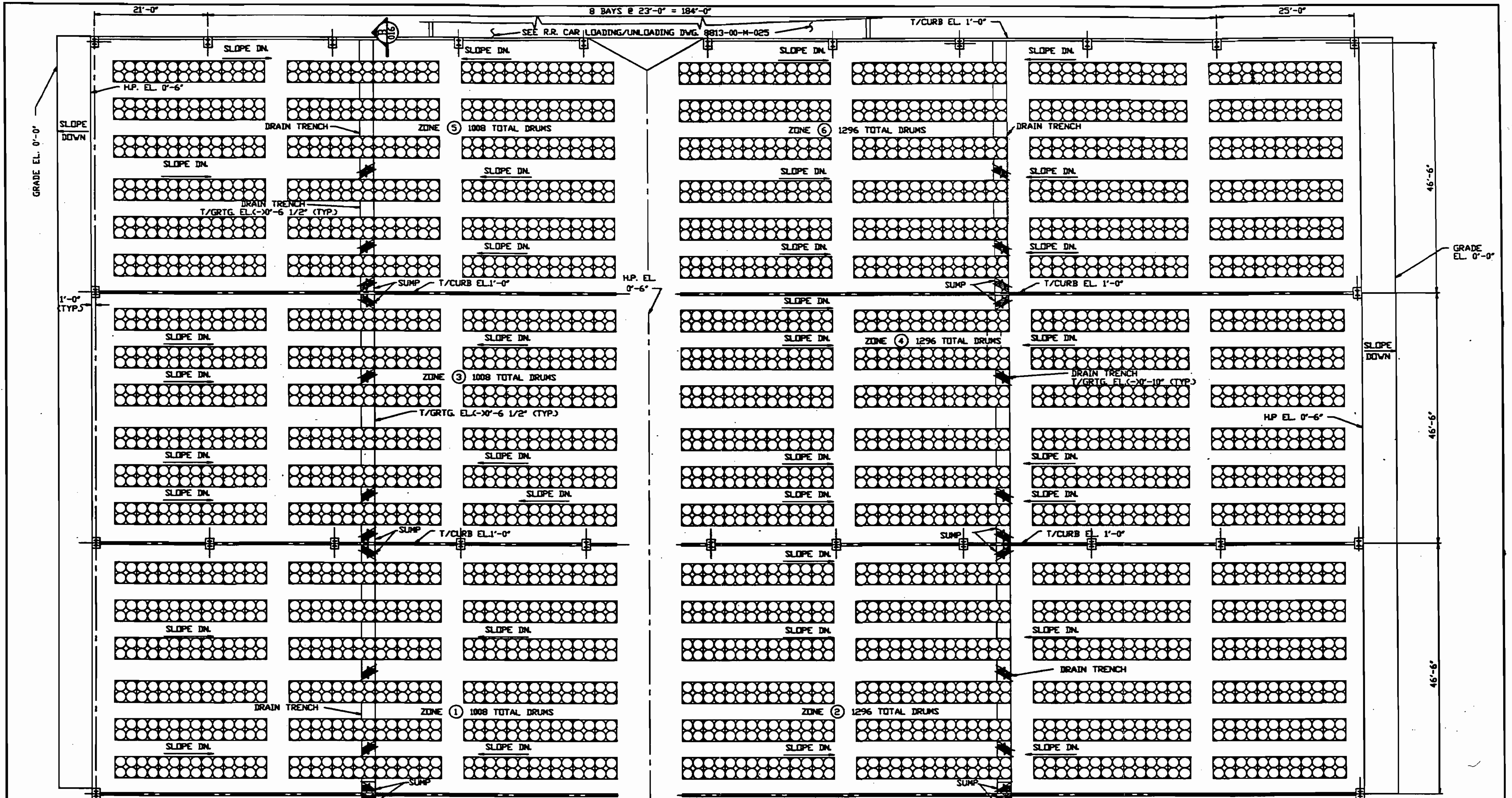

This document has been prepared and is approved by me for inclusion in environmental permit applications only. It is neither approved nor is it to be used for equipment or material procurement, construction or any other purpose.

0 4' 8' 16'
SCALE

REV.	DATE	REVISION	BY	CHKD
E	9/[illegible]	SPLIT & REVISED DWG M-015 & REISSUED FOR PERMIT	A.M.S.	[illegible]
D	9/08/89	GENERAL REVISION	J.R.	W.J.H.
C	4/17/89	ISSUED FOR PERMIT	M.K.	W.J.H.
B	3/08/89	ISSUED FOR CLIENT REVIEW	M.K.	W.J.H.
A	12/27/88	ISSUED FOR INTERNAL REVIEW	M.K.	W.J.H.

PROJECT
FLORIDA FIRST
PROCESSING, INC.

SCALE:

International
WasteEnergy
Systems
ST. LOUIS, MO.

TITLE
GENERAL ARRANGEMENT
ORGANIC TREATMENT
CONTAINER STAGING
PLAN

DRAWN	DATE	APPD	DATE	DRAWING NO.	REV.
M.K.	1/22/88			8813-00-M-015.2	E
CHKD	DATE		DATE		

FILE NAME: 8813152.DWG

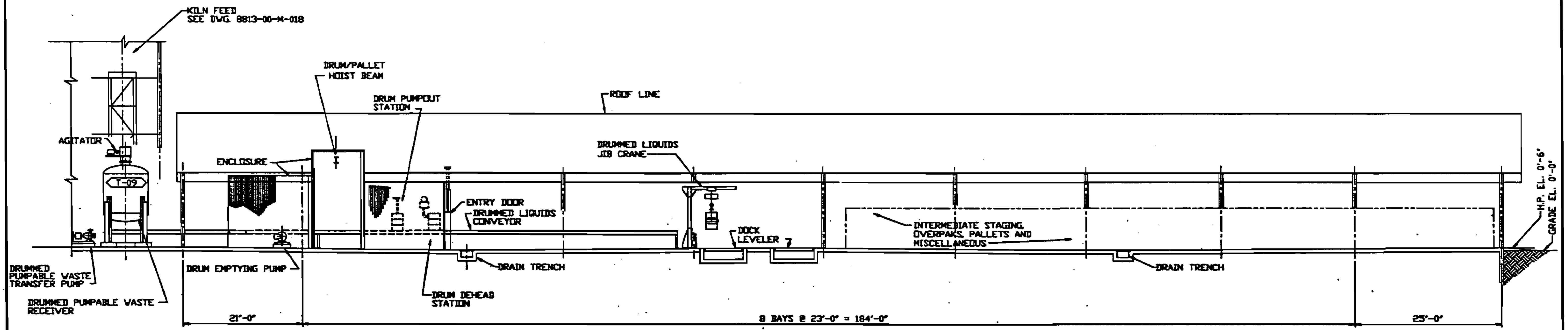

SECTION A
015.1

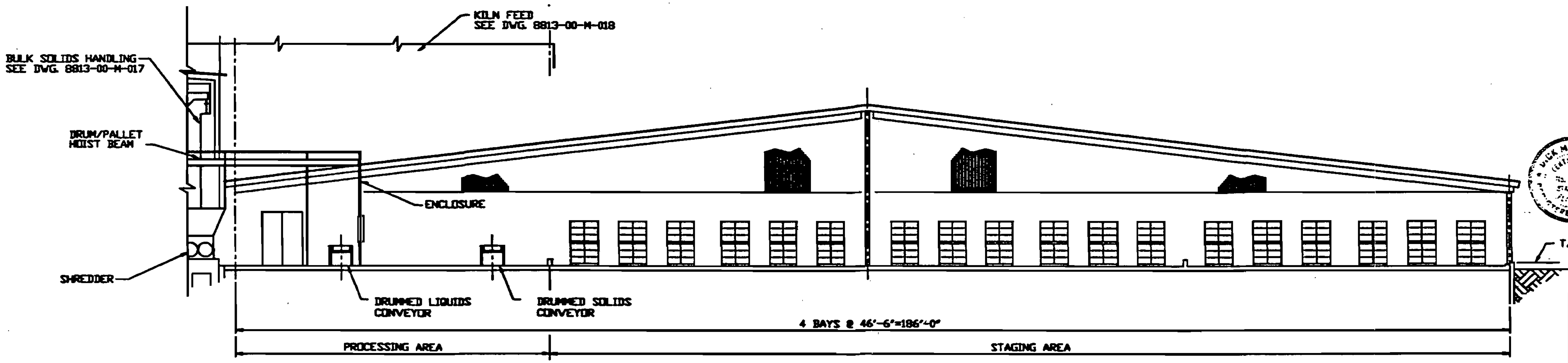

SECTION B
015.1, 015.2

DICK M. MILLER
REGISTERED ENGINEER
STATE OF FLORIDA

This document has been prepared and is approved by me for inclusion in environmental permit applications only. It is neither approved nor is it to be used for equipment or material procurement, construction or any other purpose.

0 4' 8' 16'
SCALE

SCALE:

International
WasteEnergy
Systems
ST. LOUIS, MO.

REV.	DATE	REVISION	BY	CHKD
E	7/31/[illegible]	REVISED AND REISSUED FOR PERMIT	ANS	ael
D	9/08/[illegible]	GENERAL REVISION	J.B.	W.J.H.
C	4/17/[illegible]	ISSUED FOR PERMIT	M.K.	WJH
B	03/03/[illegible]	ISSUED FOR CLIENT REVIEW	RLH	WJH
A	12/21/[illegible]	ISSUED FOR INTERNAL REVIEW	RLH	WJH

PROJECT
FLORIDA FIRST
PROCESSING, INC.

TITLE
GENERAL ARRANGEMENT-ORGANIC TREATMENT
CONTAINER STAGING AND PROCESSING
SECTIONS

DRAWN	DATE	APPD	DATE	DRAWING NO.	REV.
RLH	12/21/88				
CHKD	DATE		DATE	8813-00-M-016	E

FILE NAME: \8813\8813M016.DWG

E-4

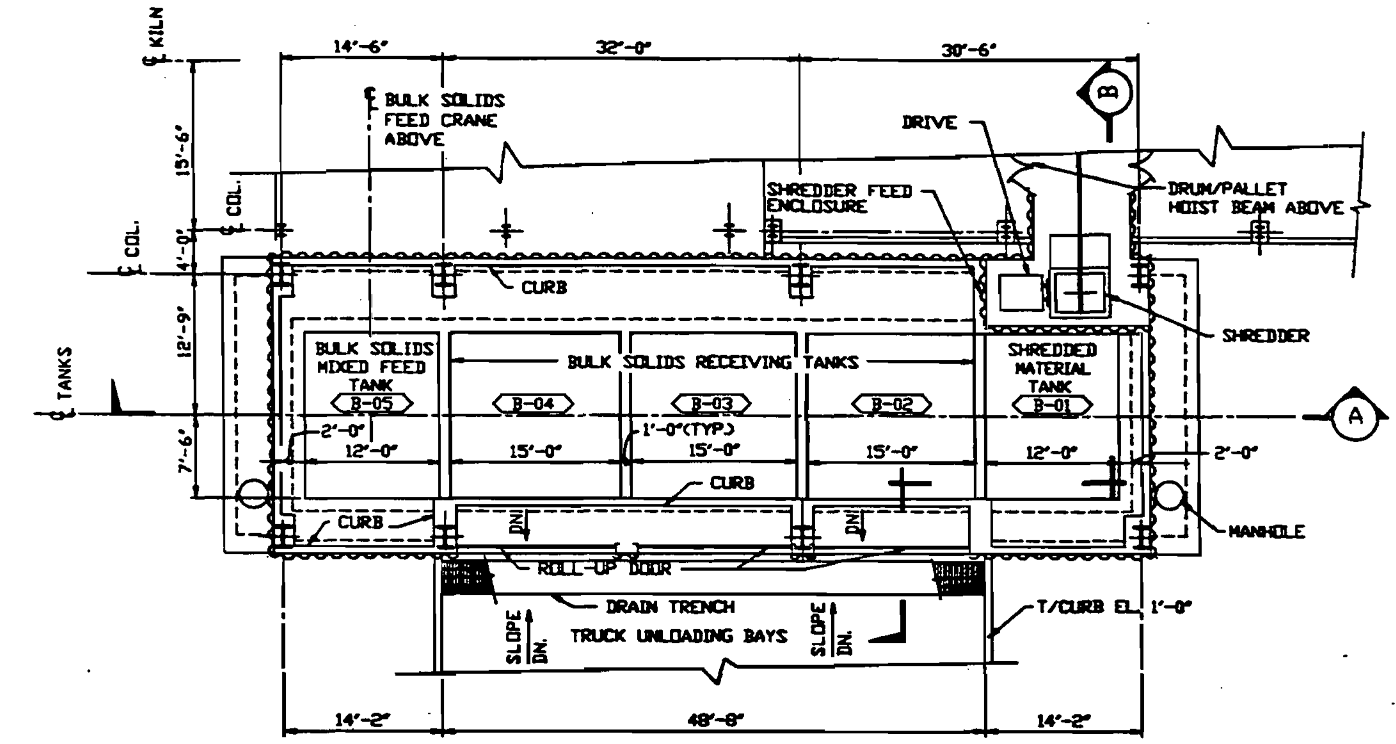

PLAN ABOVE TANKS

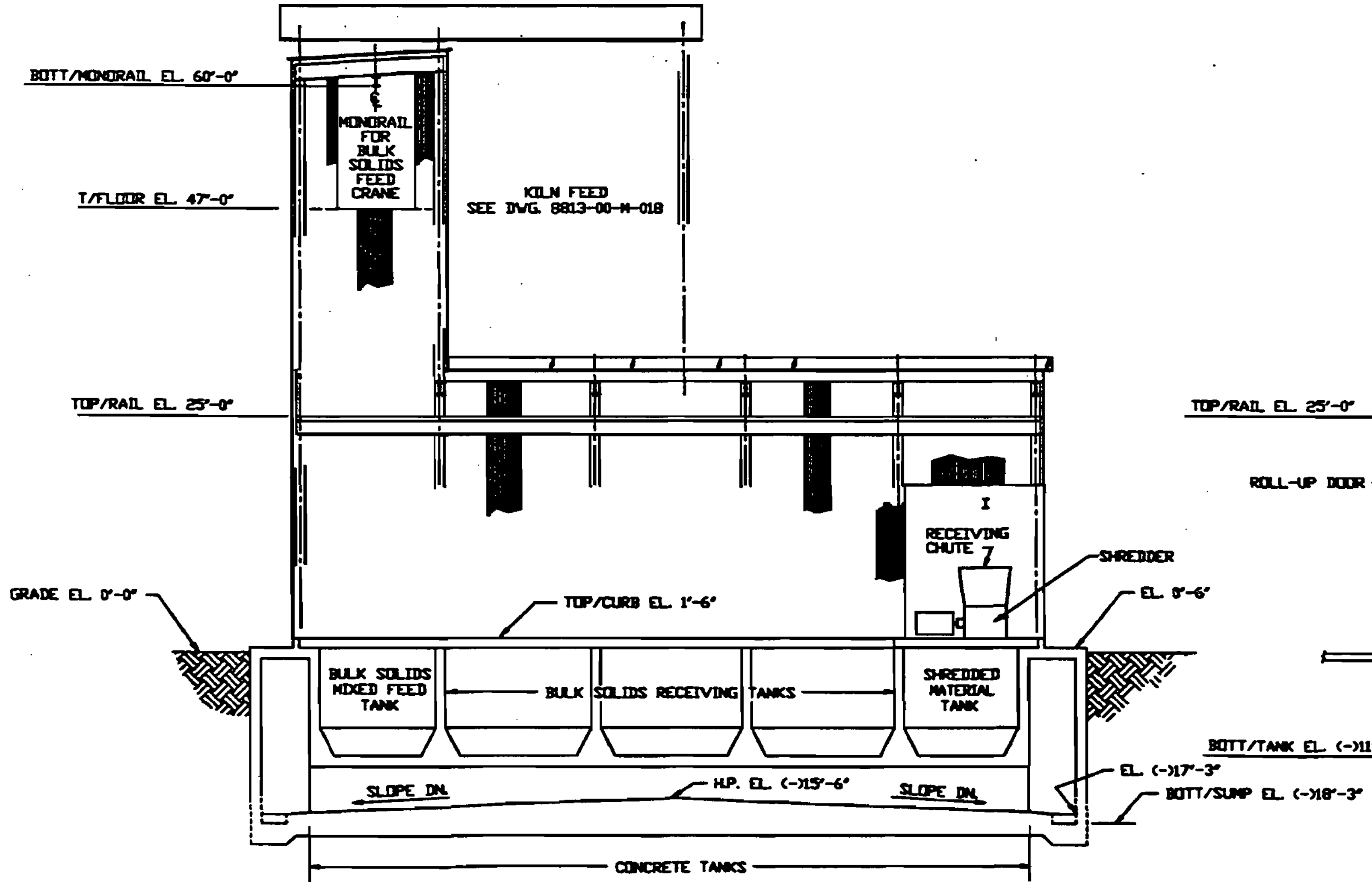

SECTION A

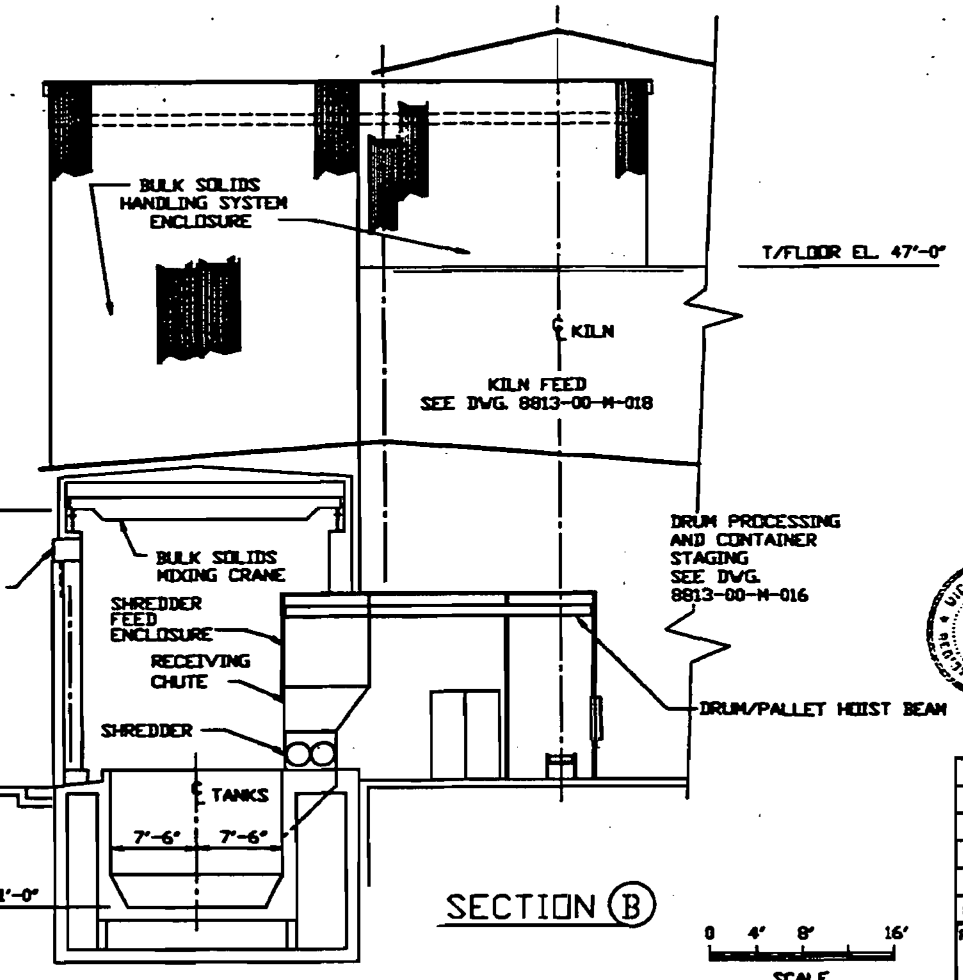

SECTION B

0 4' 8' 16'
SCALE

DICK M. MILLER
No. 27227
STATE OF FLORIDA

This document has been prepared and is approved by me for inclusion in environmental permit applications only. It is neither approved nor is it to be used for equipment or material procurement, construction or any other purpose.

REV.	DATE	REVISION	BY	
E	9/21/89	REVISED AND REISSUED FOR PERMIT	A.M.S.	[illegible]
D	9/08/89	GENERAL REVISION	J.B.	W.A.M.
C	4/17/89	ISSUED FOR PERMIT	M.K.	W.A.M.
B	2/10/89	ISSUED FOR CLIENT REVIEW	M.K.	W.A.M.
A	12/30/88	ISSUED FOR INTERNAL REVIEW	M.K.	[illegible]

SCALE:

International WasteEnergy Systems
ST. LOUIS, MO.

PROJECT
FLORIDA FIRST
PROCESSING, INC.

TITLE
GENERAL ARRANGEMENT
ORGANIC TREATMENT
BULK SOLIDS UNLOADING & HANDLING
PLAN AND SECTIONS

DRAWN	DATE	APPD	DATE	DRAWING NO.	REV.
M.K.	12/23/88			8813-00-M-017	E
CHKD	DATE		DATE		

FILE NAME: \8813\...017.DWG

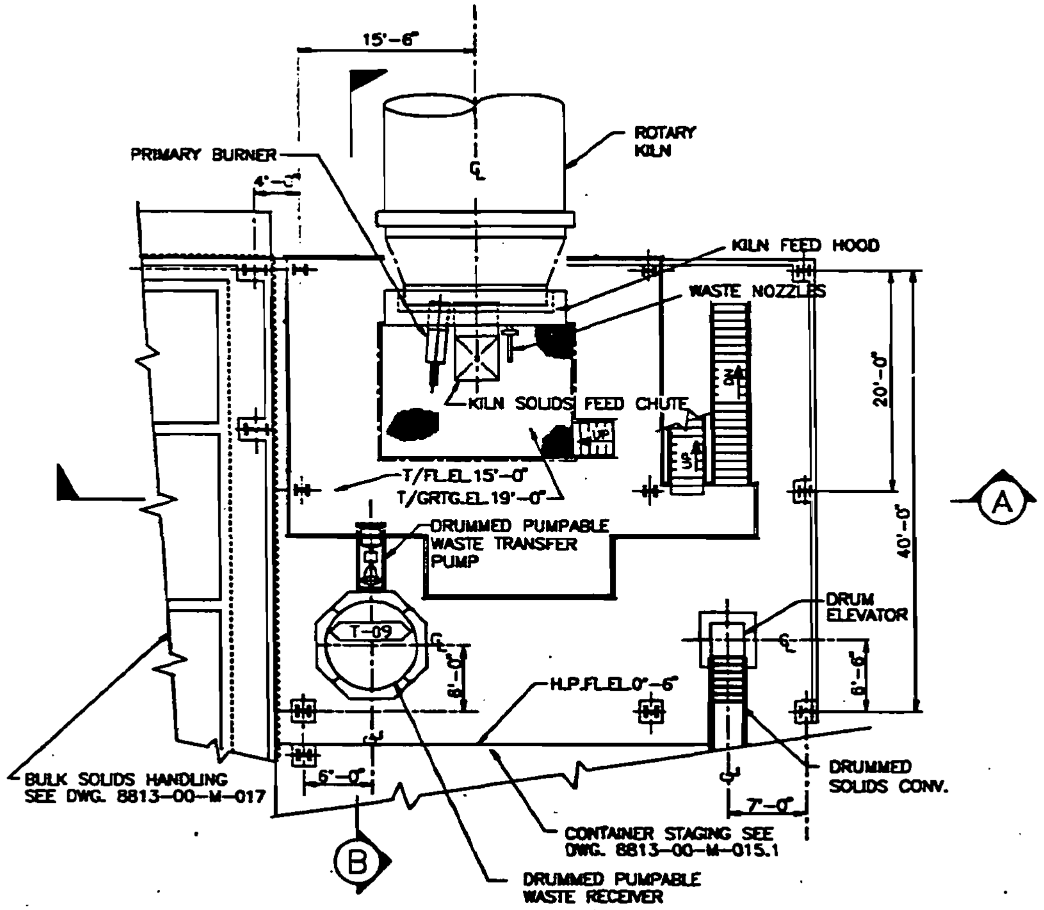

PLAN ABOVE PLATFORM EL. 19'-0"

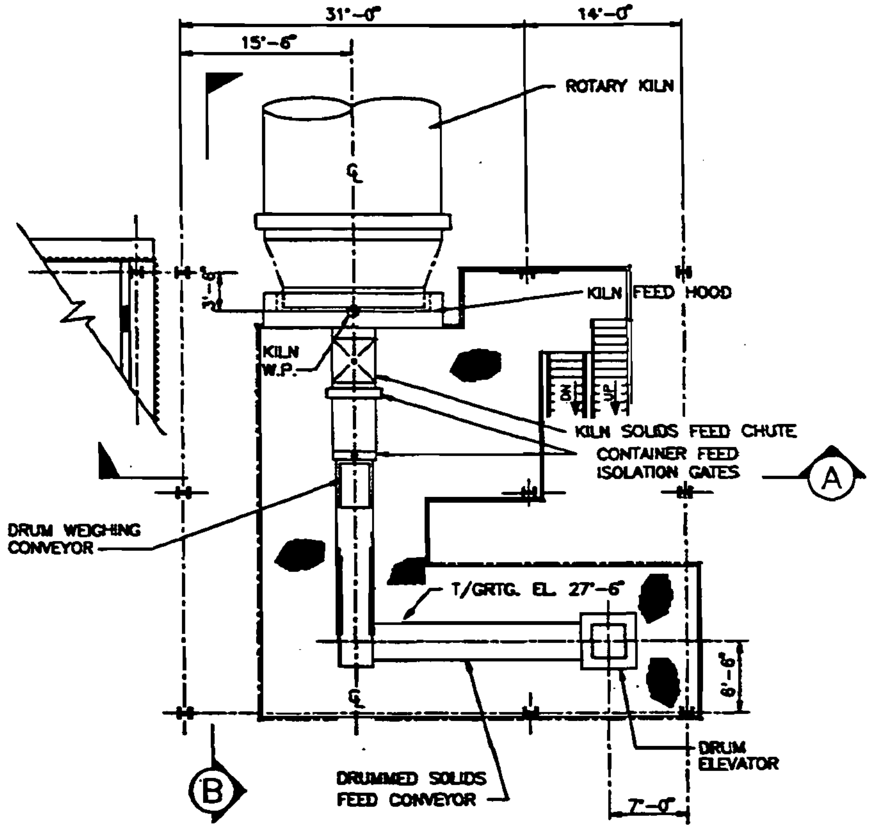

PLAN ABOVE FL. EL. 27'-6"

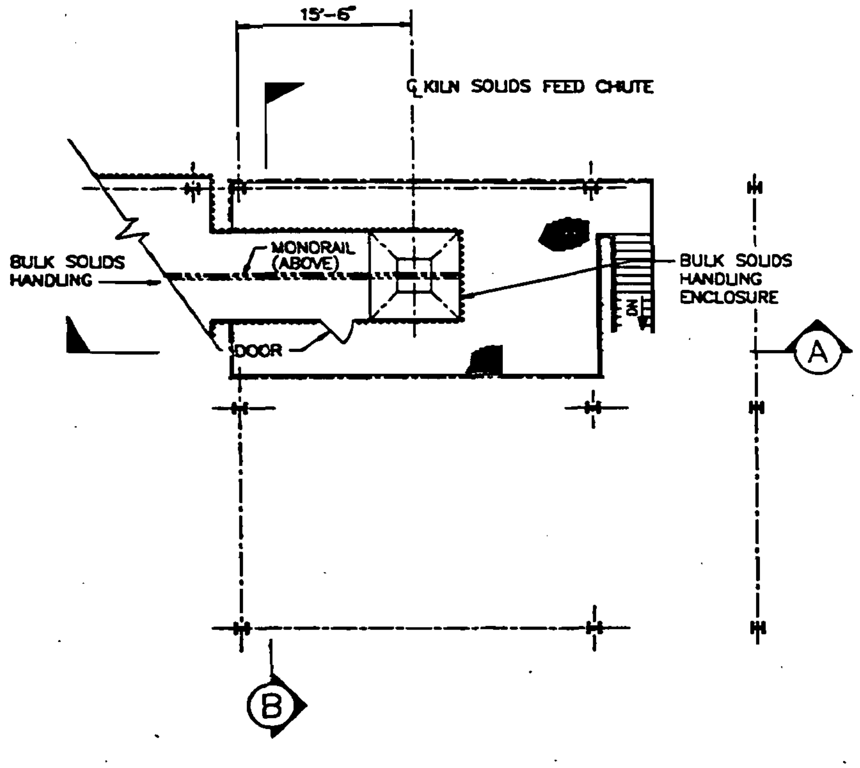

PLAN ABOVE FL. EL. 47'-0"

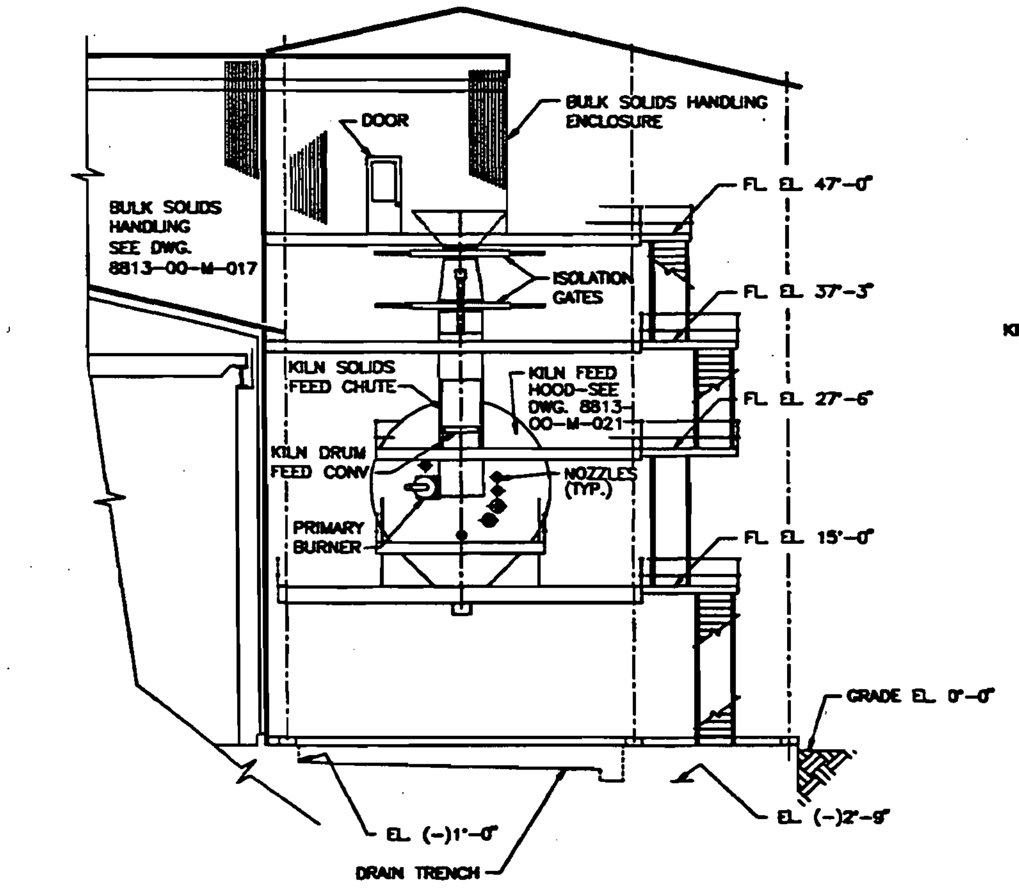

SECTION (A)

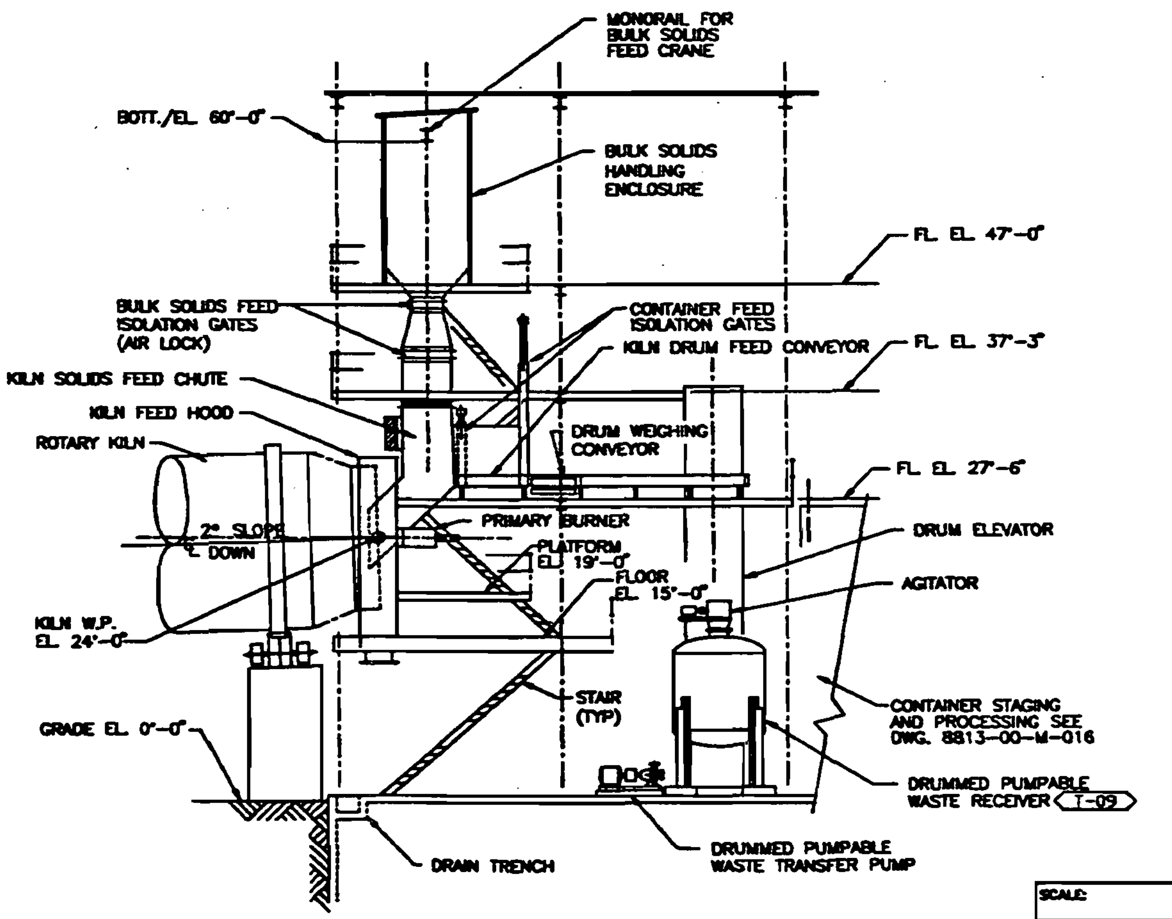

SECTION (B)

0 4' 8' 16'
SCALE

RICK M. MILLER
No. 32927
STATE OF FLORIDA
REGISTERED ENGINEER

This document has been prepared and is stamped by me for inclusion in environmental permit applications only. It is neither approved nor is it to be used for equipment or material procurement, construction or any other purpose.

REV.	DATE	REVISION	BY	CHKD
E	9/[illegible]	REVISED AND REISSUED FOR PERMIT	A.R.S.	[illegible]
D	9/08/89	GENERAL REVISION	J.B.	W.J.H.
C	4/17/89	ISSUED FOR PERMIT	M.K.	WJH
B	3/3/89	ISSUED FOR CLIENT REVIEW	M.K.	WJH
A	12/20/88	ISSUED FOR INTERNAL REVIEW	M.A.	WJH

SCALE:

International WasteEnergy Systems
ST. LOUIS, MO.

PROJECT
FLORIDA FIRST
PROCESSING, INC.

TITLE
GENERAL ARRANGEMENT
ORGANIC TREATMENT
KILN FEED
PLANS AND SECTIONS

DRAWN	DATE	APPD	DATE	DRAWING NO.	REV.
K.K.	12/20/88				
CHKD	DATE		DATE	8813-00-M-018	E

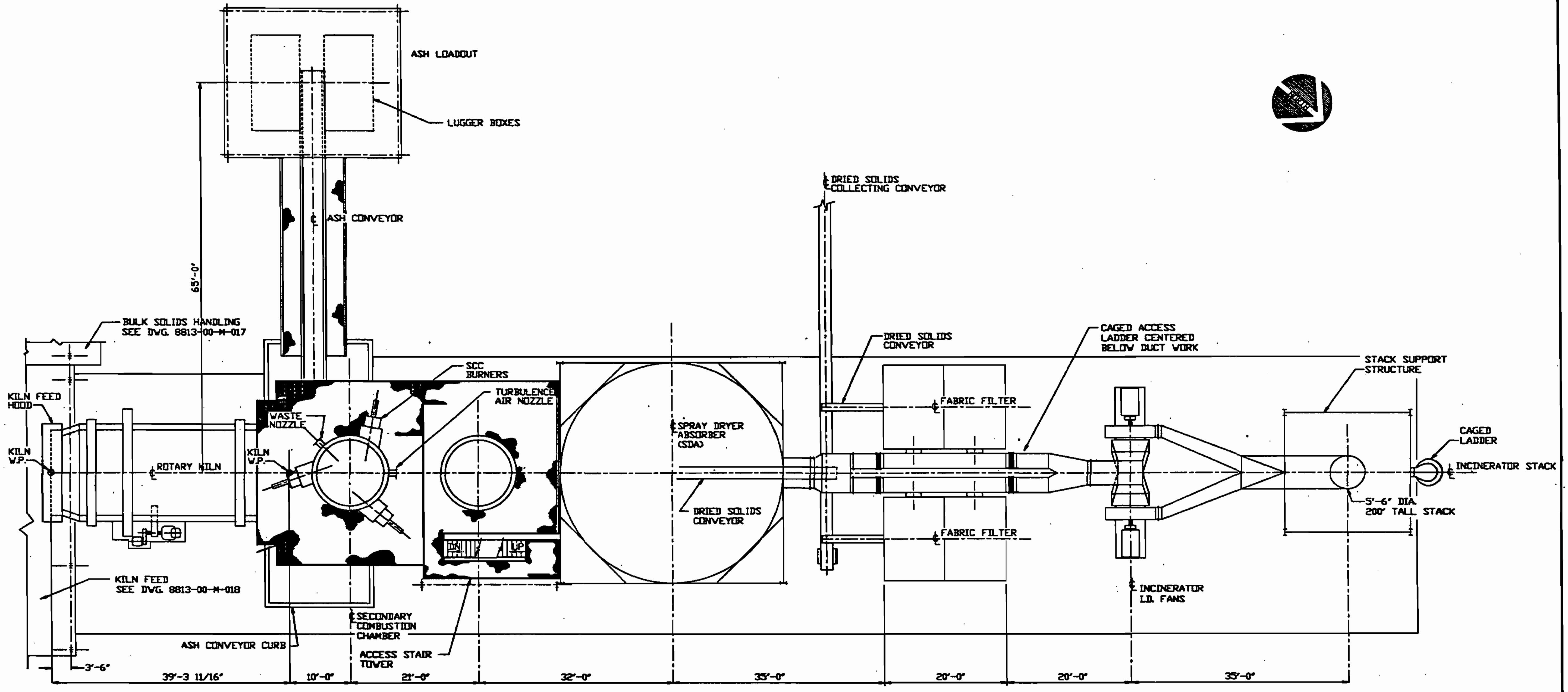

PLAN

This document has been prepared and is approved by me for inclusion in environmental permit applications only. It is neither approved nor is it to be used for equipment or material procurement, construction or any other purpose.

DICK M. MILLER No. 20027

0 4' 8' 16'
SCALE

F		REVISED AND REISSUED FOR PERMIT	A.M.S.	
E	9/08/89	GENERAL REVISION	J.B.	W.J.H.
D	5/01/89	GEN. REVISION & REISSUED FOR PERMIT	T.R.	W.J.H.
C	4/18/89	ISSUED FOR PERMIT	M.K.	W.J.H.
B	3/3/89	ISSUED FOR CLIENT REVIEW	M.J.A.	W.J.H.
A	12/30/88	ISSUED FOR INTERNAL REVIEW	M.J.A.	W.J.H.
REV.	DATE	REVISION	BY	CH.

PROJECT
FLORIDA FIRST
PROCESSING, INC.

SCALE:

International
WasteEnergy
Systems
ST. LOUIS, MO.

TITLE
GENERAL ARRANGEMENT
ORGANIC TREATMENT
KILN AND GAS CLEANING
PLAN

DRAWN	DATE	APPD	DATE	DRAWING NO.	REV.
M.J.A.	12/27/88				
CHKD	DATE		DATE	8813-00-M-019	F

FILE NAME: \8813\8813M019.DWG

F-6

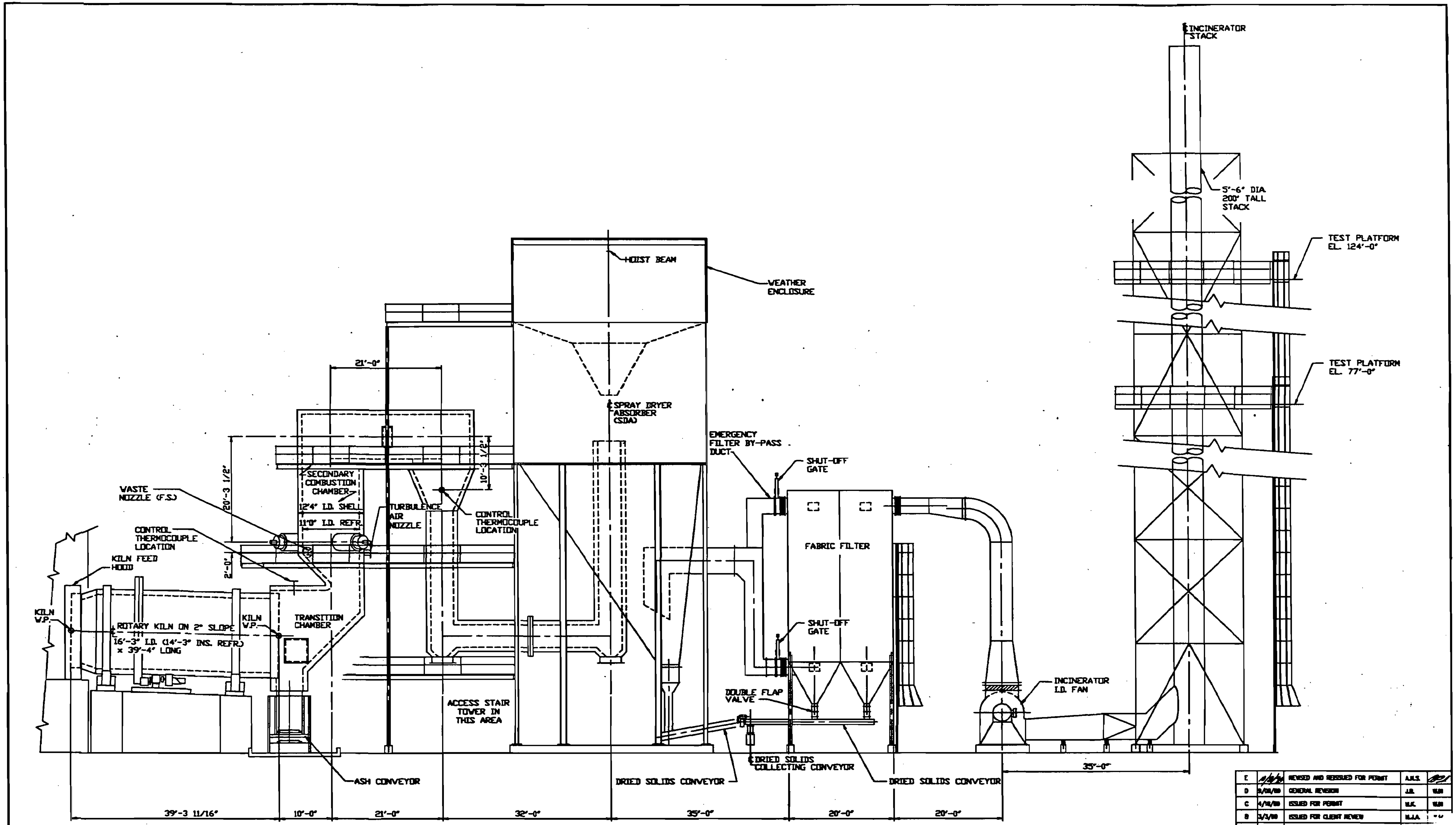

ELEVATION

0 4' 8' 16'
SCALE

This document has been prepared and is approved by me for inclusion in environmental permit applications only. It is neither approved nor is it to be used for equipment or material procurement, construction or any other purpose.

DICK M. MILLER
REGISTERED ENGINEER

E	[illegible]	REVISED AND REISSUED FOR PERMIT	A.M.S.	[illegible]
D	9/08/89	GENERAL REVISION	J.R.	W.M
C	4/18/89	ISSUED FOR PERMIT	M.K.	W.M
B	3/3/89	ISSUED FOR CLIENT REVIEW	M.J.A.	[illegible]
A	12/30/88	ISSUED FOR INTERNAL REVIEW	M.J.A.	W.M
REV.	DATE	REVISION	BY	CHKD

SCALE:

International WasteEnergy Systems

ST. LOUIS, MO.

PROJECT

FLORIDA FIRST
PROCESSING, INC.

TITLE

GENERAL ARRANGEMENT
ORGANIC TREATMENT
KILN AND GAS CLEANING
ELEVATION

DRAWN	DATE	APPD	DATE	DRAWING NO.	REV.
M.J.A.	12/20/88				
CHKD	DATE		DATE	8813-00-M-020	E

FILE NAME: \8813\8813M020.DWG

E-6

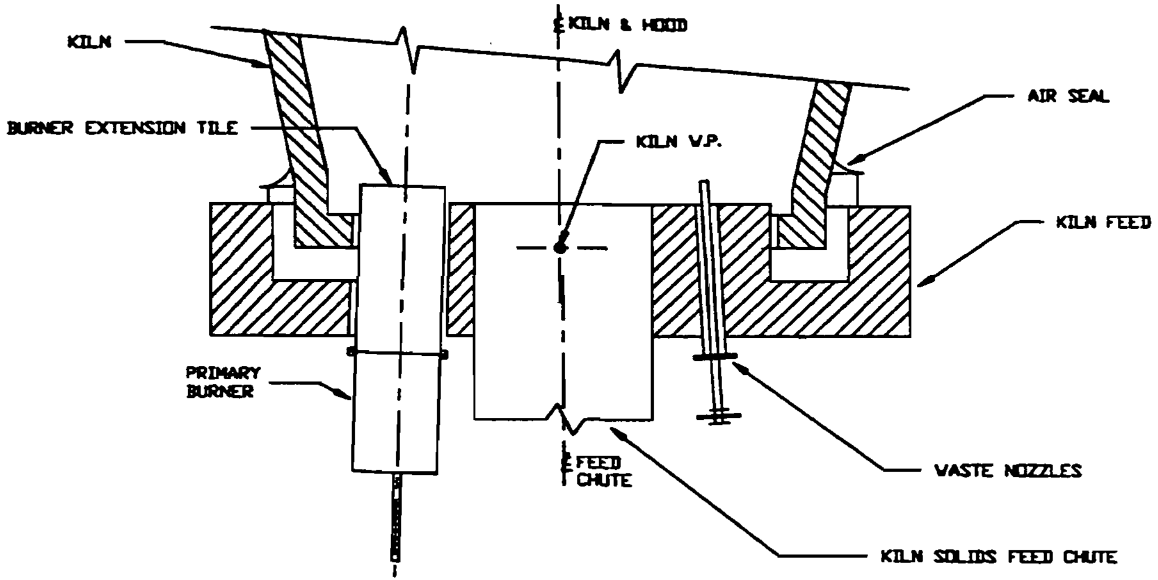

SECTION (B)

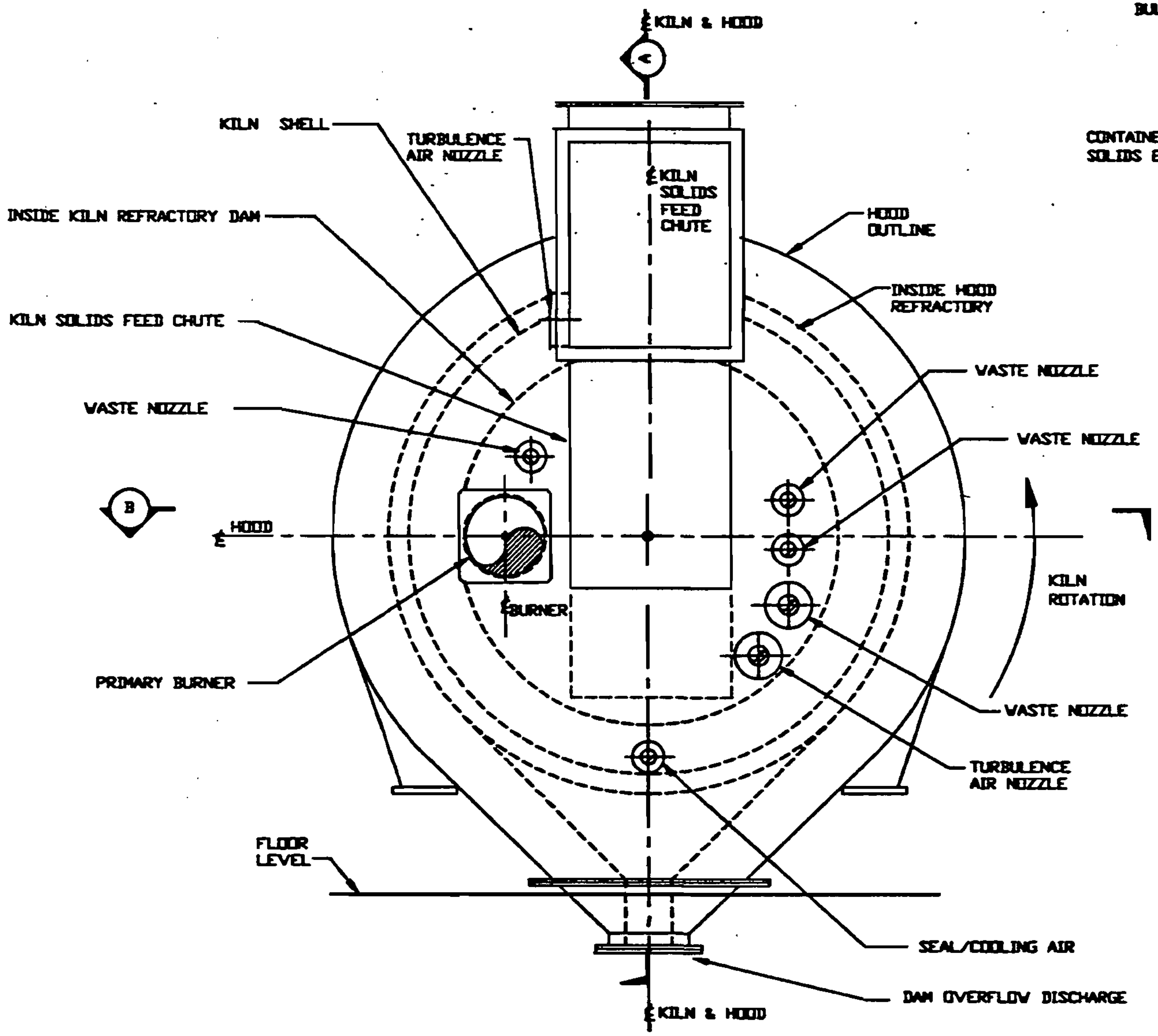

FRONT VIEW

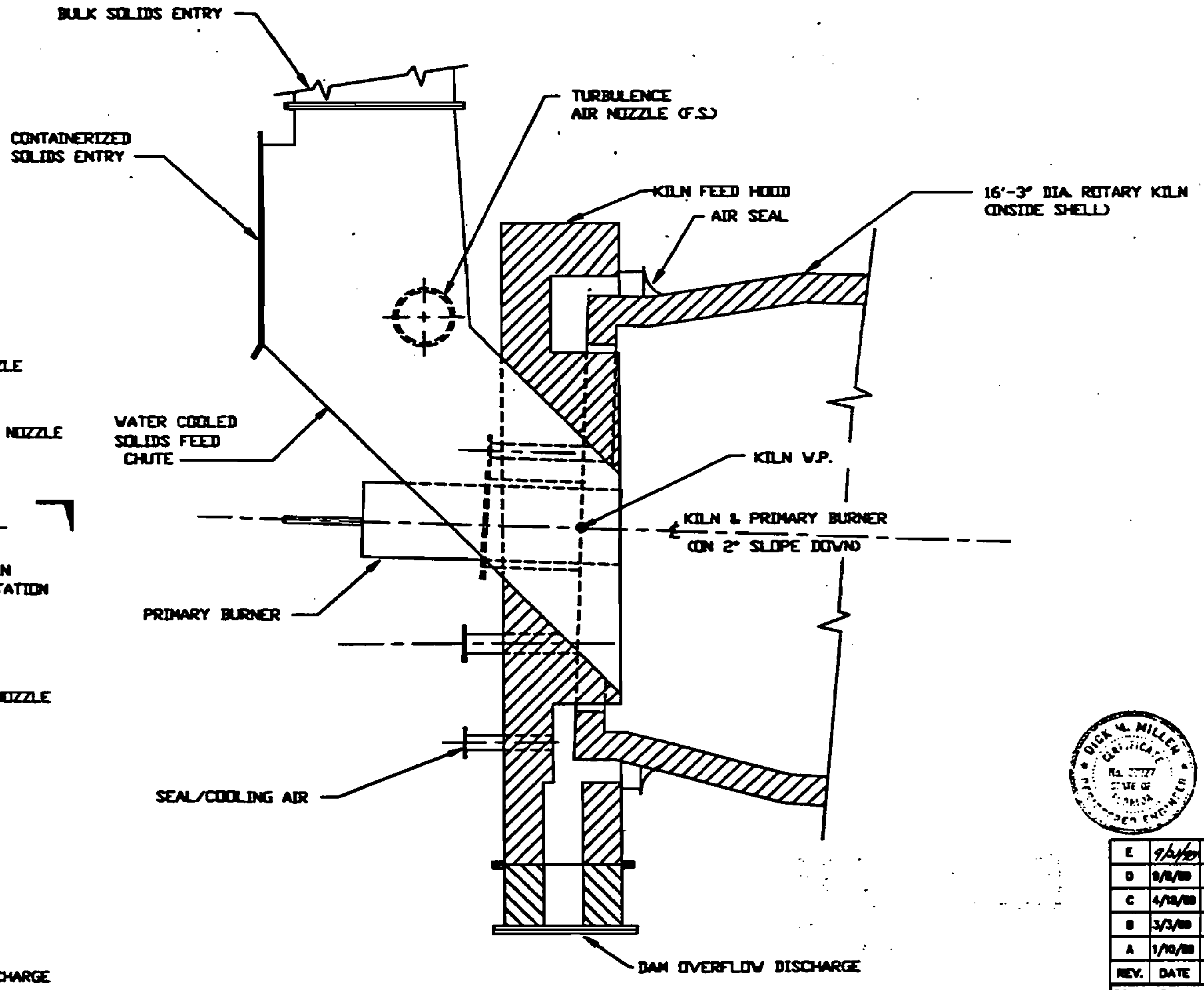

SECTION (A)

DICK W. MILLEN

This document has been prepared and is approved by me for inclusion in environmental permit applications only. It is neither approved nor is it to be used for equipment or material procurement, construction or any other purpose.

E	9/21/89	REVISED AND REISSUED FOR PERMIT	A.N.S.	
D	9/8/89	GENERAL REVISION	M.K.	
C	4/18/89	ISSUED FOR PERMIT	M.K.	W.J.M.
B	3/3/89	ISSUED FOR CLIENT REVIEW	M.K.	W.J.M.
A	1/10/89	ISSUED FOR INTERNAL REVIEW	M.K.	W.J.M.
REV.	DATE	REVISION	BY	CHKD

PROJECT

FLORIDA FIRST
PROCESSING, INC.

SCALE: NONE

International
WasteEnergy
Systems
ST. LOUIS, MO.

TITLE

ARRANGEMENT
ORGANIC TREATMENT
KILN FEED HOOD

DRAWN	DATE	APPD	DATE	DRAWING NO.	REV.
M.K.	1/5/89			8813-00-M-021	E
CHKD	DATE		DATE		

E-4

FILE NAME: \8813\8813M021.DWG

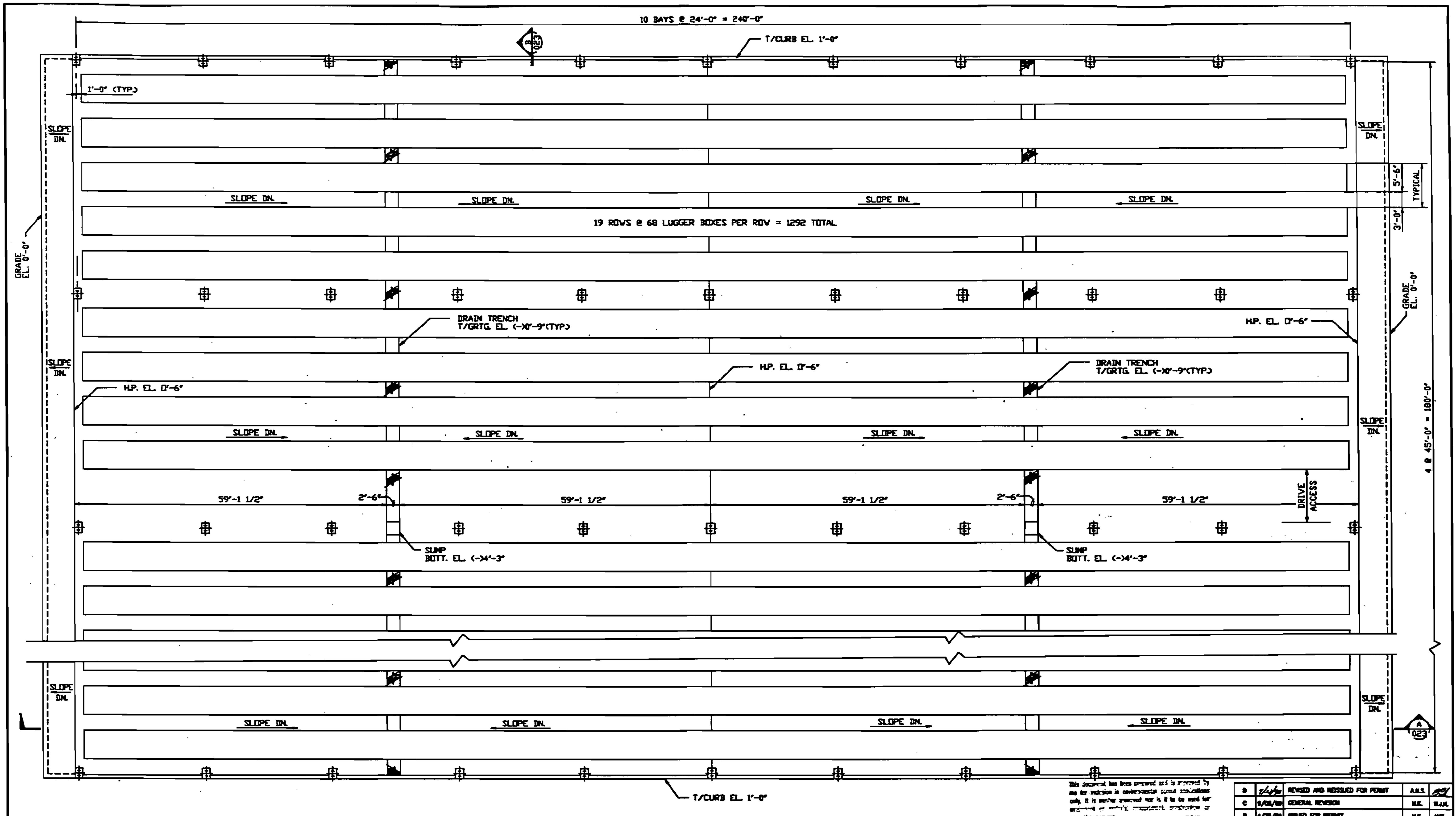

This document has been prepared and is approved by me for inclusion in environmental permit applications only. It is neither approved nor is it to be used for [illegible] construction or any other purpose.

0 4' 8' 16'
SCALE

NOTE: THIS DRAWING SHOWS ONE SECTION OF THE BUILDING. THE BUILDING CONSISTS OF TWO IDENTICAL SECTIONS.

REV.	DATE	REVISION	BY	CHKD
D	7/4/90	REVISED AND REISSUED FOR PERMIT	A.J.S.	[illegible]
C	9/08/89	GENERAL REVISION	W.K.	W.J.H.
B	4/25/89	ISSUED FOR PERMIT	W.K.	AHS
A	4/20/89	ISSUED FOR INTERNAL REVIEW	W.K.	

12.DWG

FILE NAME: \8813

PROJECT
FLORIDA FIRST
PROCESSING, INC.

SCALE:

International
WasteEnergy
Systems
ST. LOUIS, MO.

TITLE
GENERAL ARRANGEMENT
RESIDUE STORAGE
PLAN

DRAWN	DATE	APP'D	DATE	DRAWING NO.	REV.
W.K.	4/19/89			8813-00-M-022	D
CHKD	DATE		DATE		

D-3

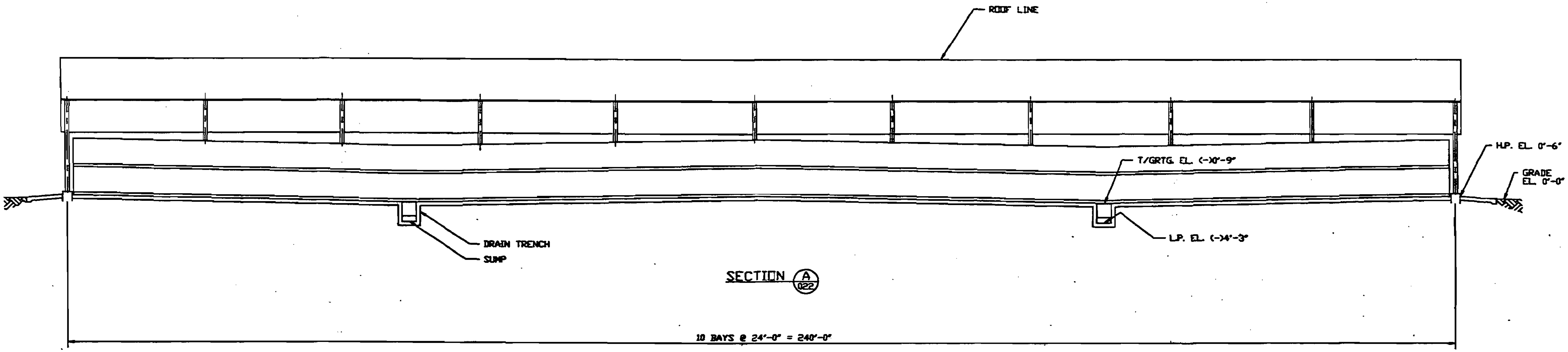

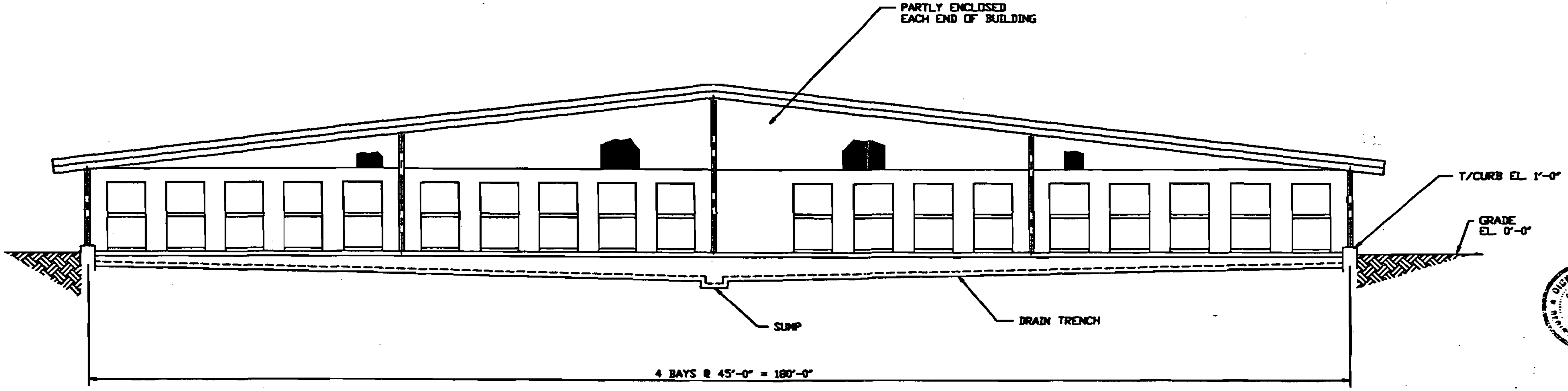

SECTION B 022

0 4' 8' 16'
SCALE

DICK M. MILLER No. 22877 STATE OF FLORIDA

This document has been prepared and is approved by me for inclusion in environmental permit applications only. It is neither approved nor is it to be used for equipment or material procurement, construction or any other purpose.

REV.	DATE	REVISION	BY	CHKD
D	9/[illegible]/[illegible]	REVISED AND REISSUED FOR PERMIT	A.N.S.	
C	9/08/89	GENERAL REVISION	T.R.	R.J.H.
B	4/25/89	ISSUED FOR PERMIT	M.K.	ANS
A	4/20/89	ISSUED FOR INTERNAL REVIEW	M.K.	ANS

PROJECT
FLORIDA FIRST
PROCESSING, INC.

TITLE
GENERAL ARRANGEMENT
RESIDUE STORAGE
SECTIONS

SCALE:

International
WasteEnergy
Systems
ST. LOUIS, MO.

DRAWN	DATE	APPD	DATE	DRAWING NO.	REV.
M.K.	4/19/89				
CHKD	DATE		DATE	8813-00-M-023	D

FILE NAME: \8813\8813M023.DWG

D-3

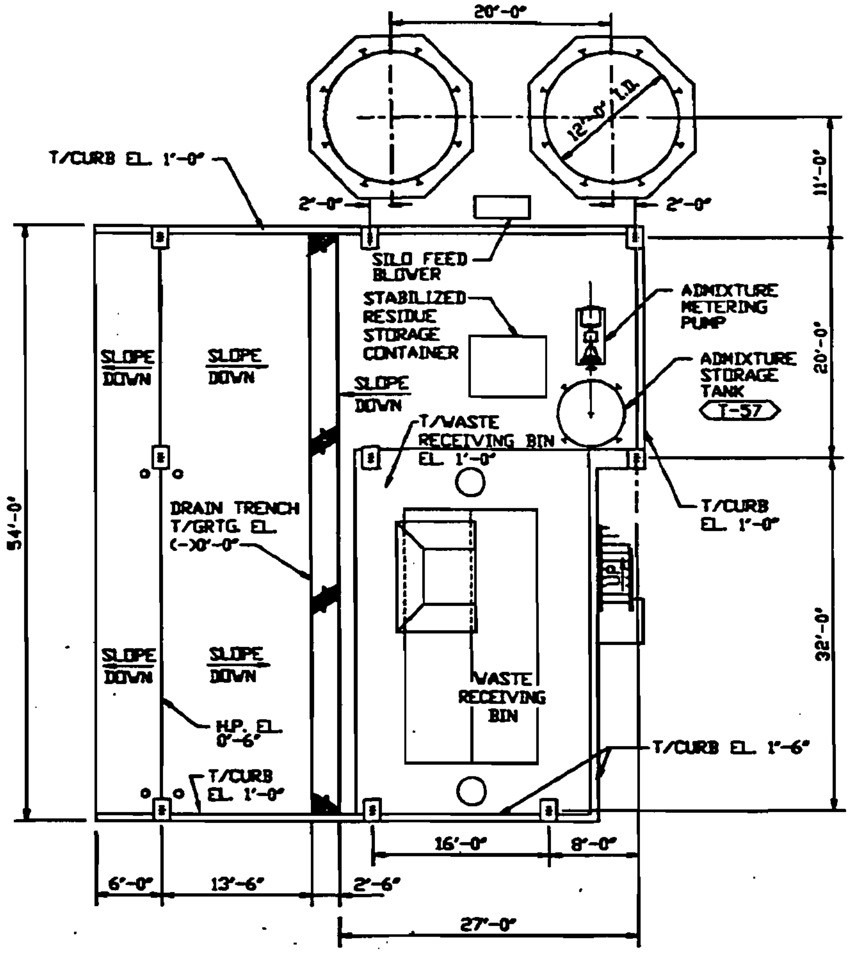

PLAN ABOVE GRADE

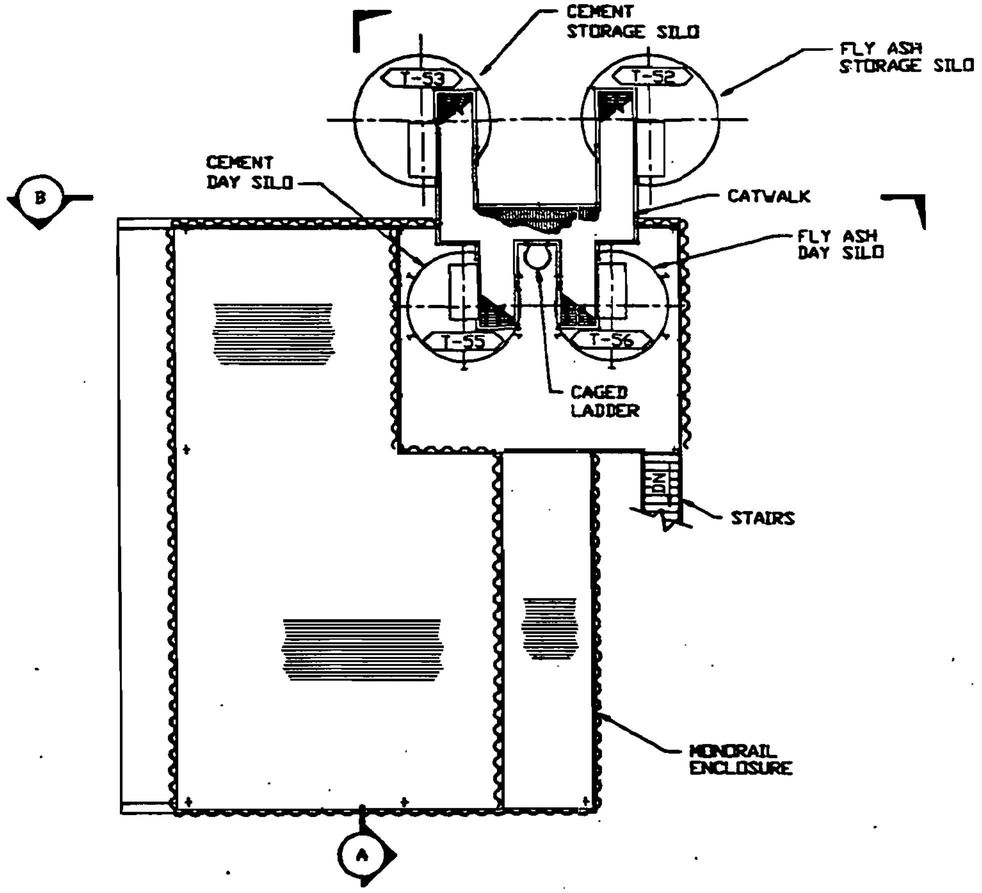

PLAN ABOVE EL. 36'-0"

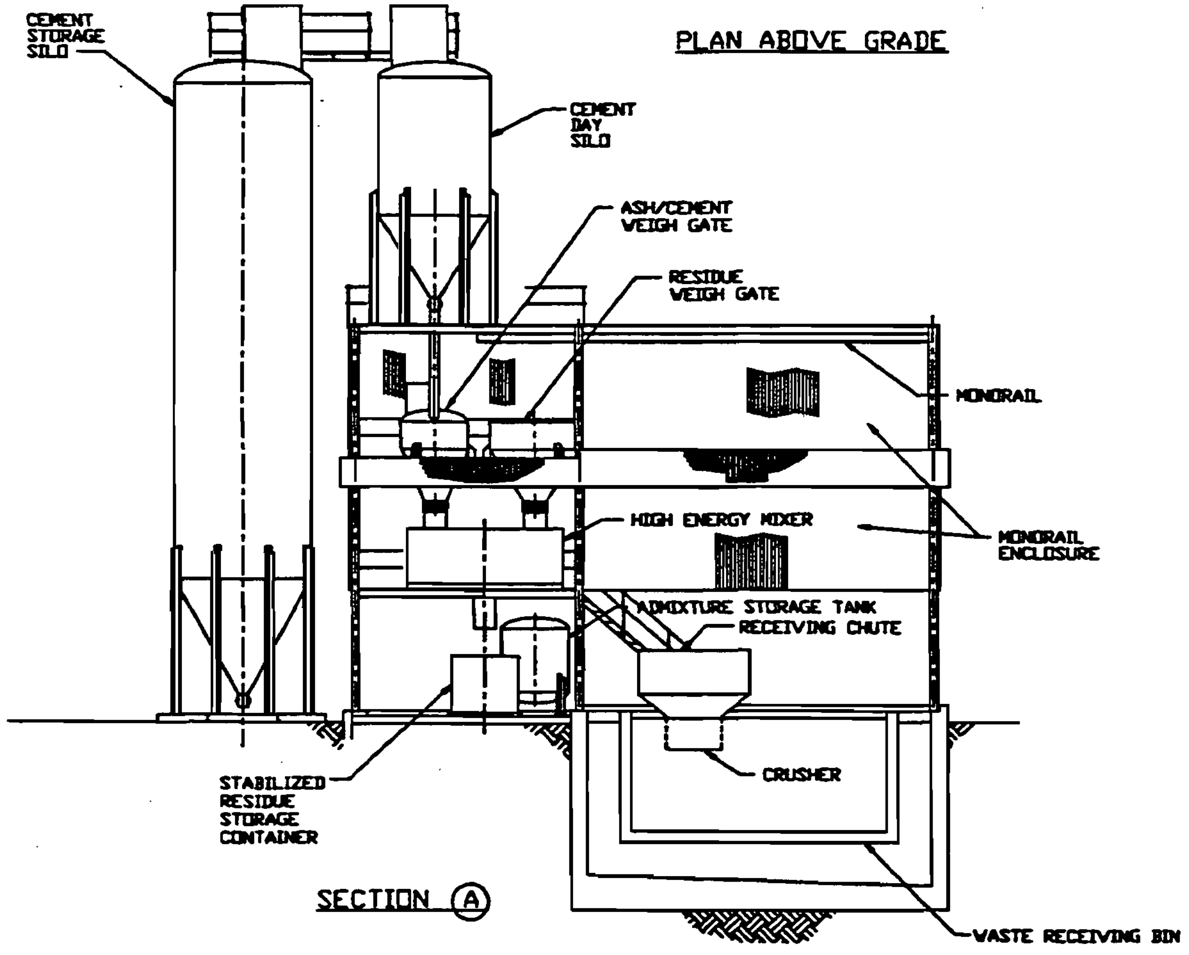

SECTION Ⓐ

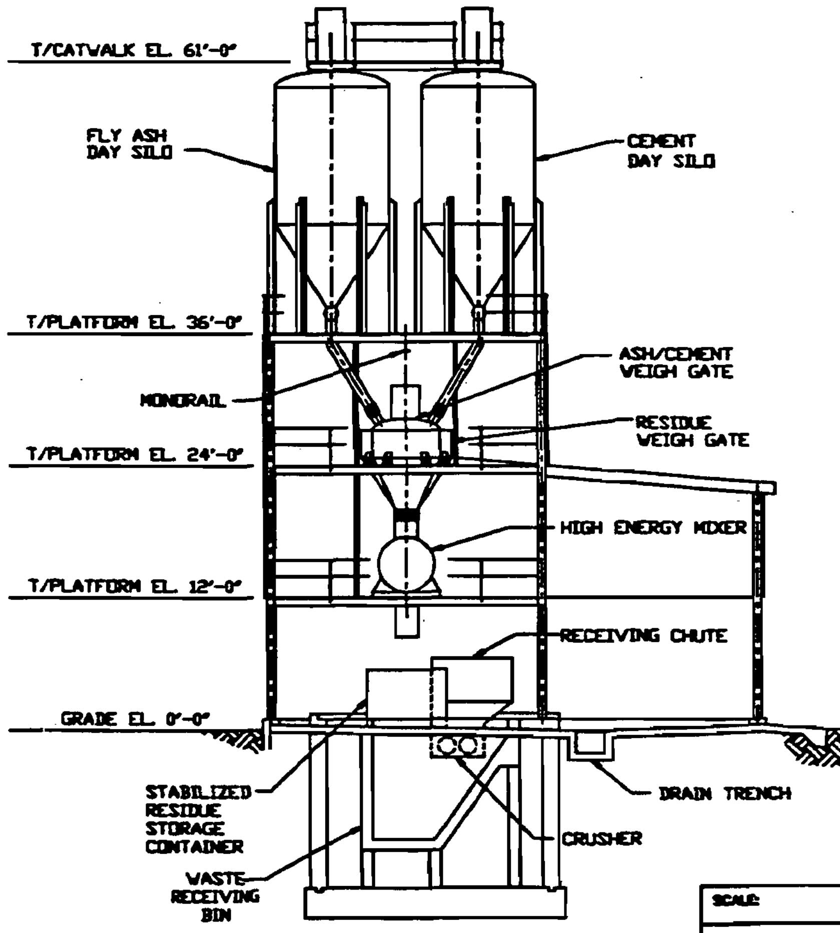

SECTION Ⓑ

0 4' 8' 16'
SCALE

DICK M. MILLER
CERTIFICATE
STATE OF FLORIDA
ENGINEER

This document has been prepared and is approved by me for inclusion in [illegible] [illegible] [illegible] [illegible] [illegible] material [illegible], [illegible] any other person.

REV.	DATE	REVISION	BY	CHKD
D	9/4/[illegible]	REVISED AND REISSUED FOR PERMIT	A.R.S.	
C	9/08/89	GENERAL REVISION	T.R.	W.J.H.
B	5/4/89	ISSUED FOR PERMIT	M.K.	ARS
A	5/1/89	ISSUED FOR INTERNAL REVIEW	M.K.	ARS

PROJECT
FLORIDA FIRST
PROCESSING, INC.

SCALE

International
WasteEnergy
Systems
ST. LOUIS, MO.

TITLE
GENERAL ARRANGEMENT
STABILIZATION
PLANS AND SECTIONS

DRAWN	DATE	APPD	DATE	DRAWING NO.	REV.
M.K.	4/25/89			8813-00-M-024	D
CHKD	DATE		DATE		

FILE NAME: \8813\8813M024.DWG

D-4

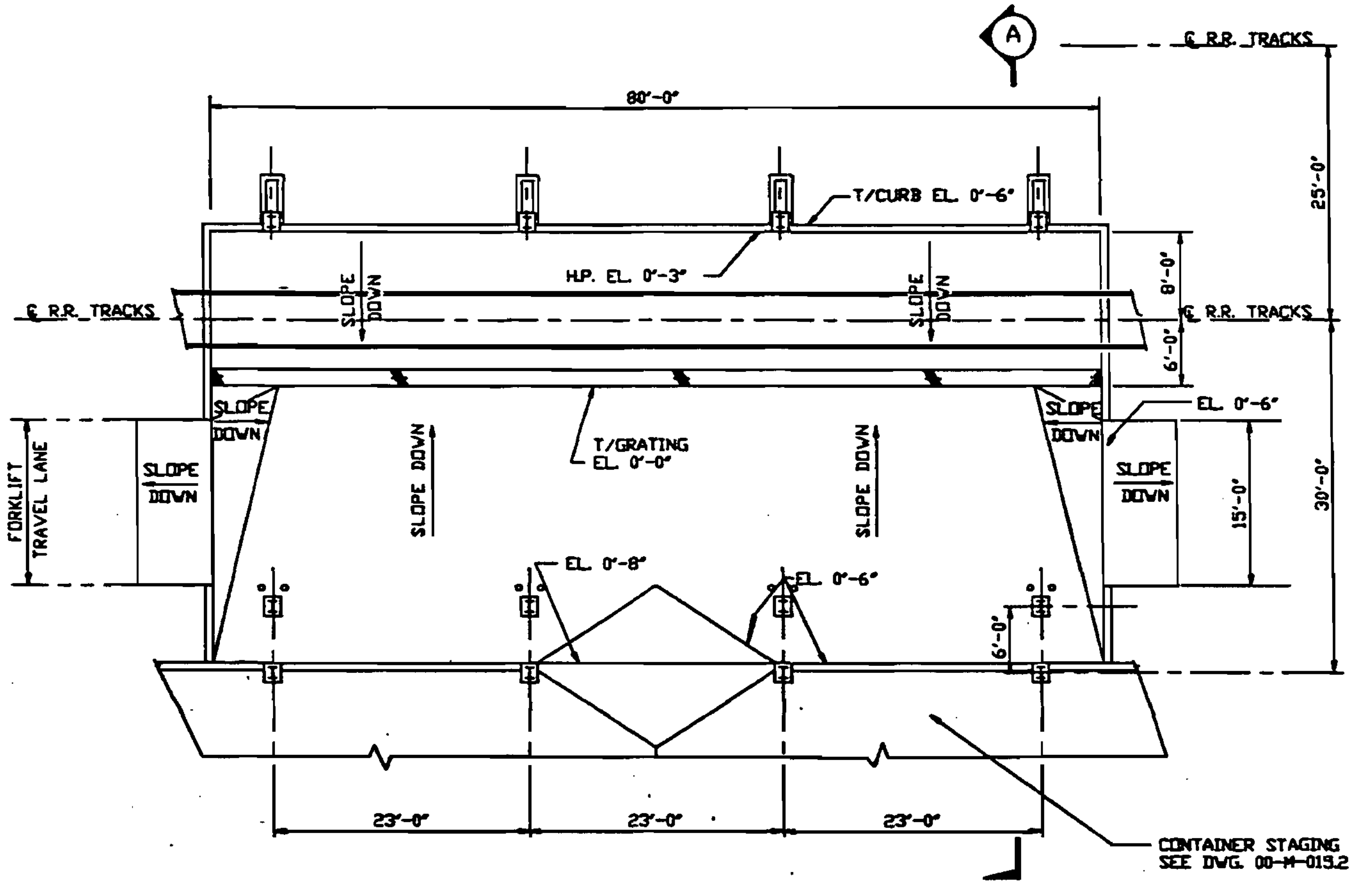

PLAN

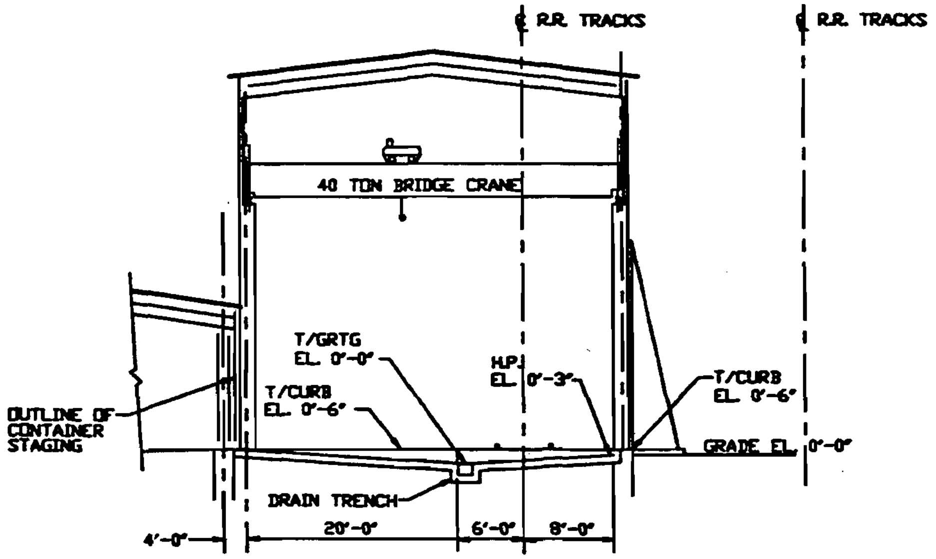

SECTION Ⓐ

0 4' 8' 16'
SCALE

DICK H. MILLER

This document has been prepared and is approved by me for inclusion in environmental permit applications only. It is neither approved nor is it to be used for equipment or material procurement, construction or any other purpose.

REV.	DATE	REVISION	BY	CHKD
E	9/[illegible]	REVISED AND REISSUED FOR PERMIT	A.M.S.	[illegible]
D	9/08/89	GENERAL REVISION	W.L.F.	W.J.H.
C	4/28/89	GENERAL REVISION	T.R.	W.J.H.
B	4/28/89	ISSUED FOR PERMIT	T.R.	W.J.H.
A	4/25/89	ISSUED FOR INTERNAL REVIEW	M.K.	W.J.H.

PROJECT
FLORIDA FIRST
PROCESSING, INC.

SCALE

International
WasteEnergy
Systems
ST. LOUIS, MO.

TITLE
GENERAL ARRANGEMENT
R.R. CAR LOADING/UNLOADING
PLAN AND SECTION

DRAWN	DATE	APPD	DATE	DRAWING NO.	REV.
M.K.	4/21/89			8813-00-M-025	E
CHKD	DATE		DATE		

FILE NAME: [illegible]

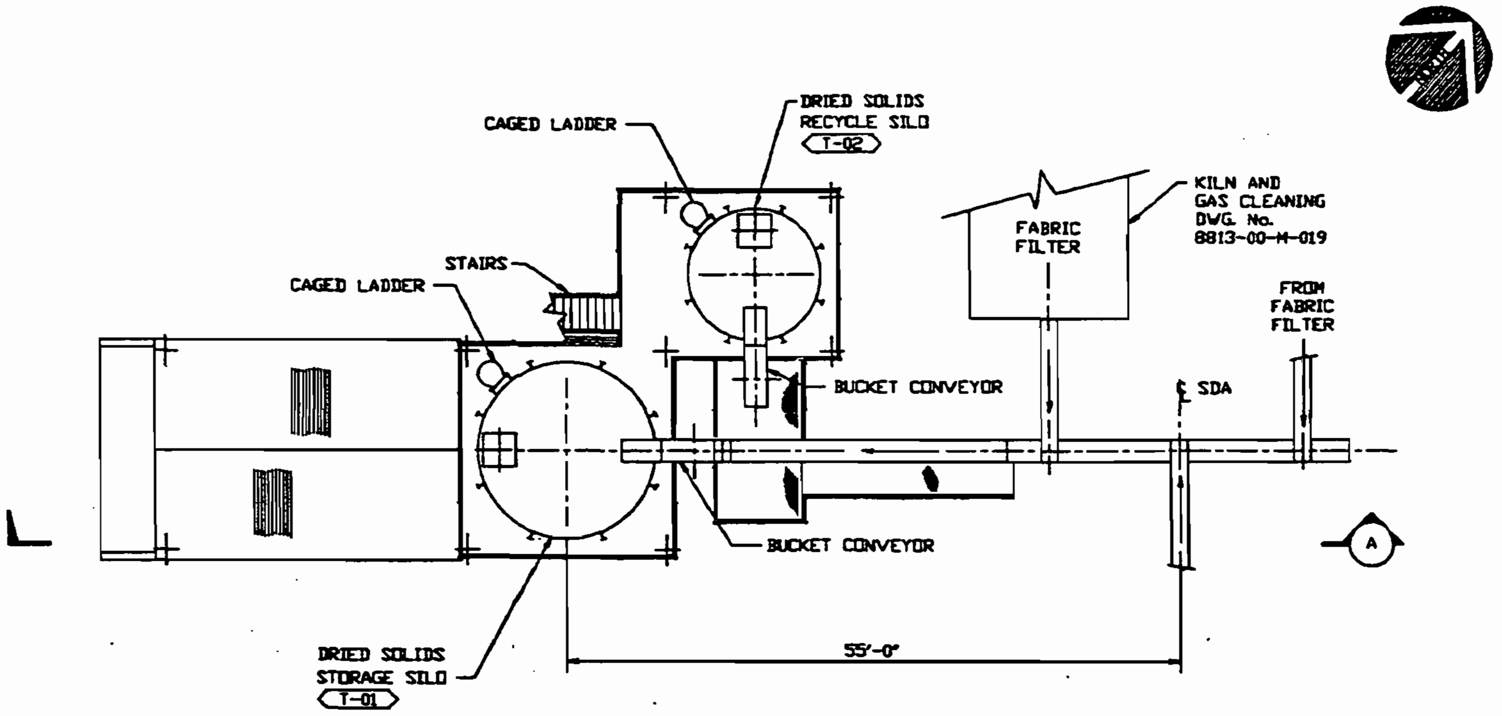

PLAN

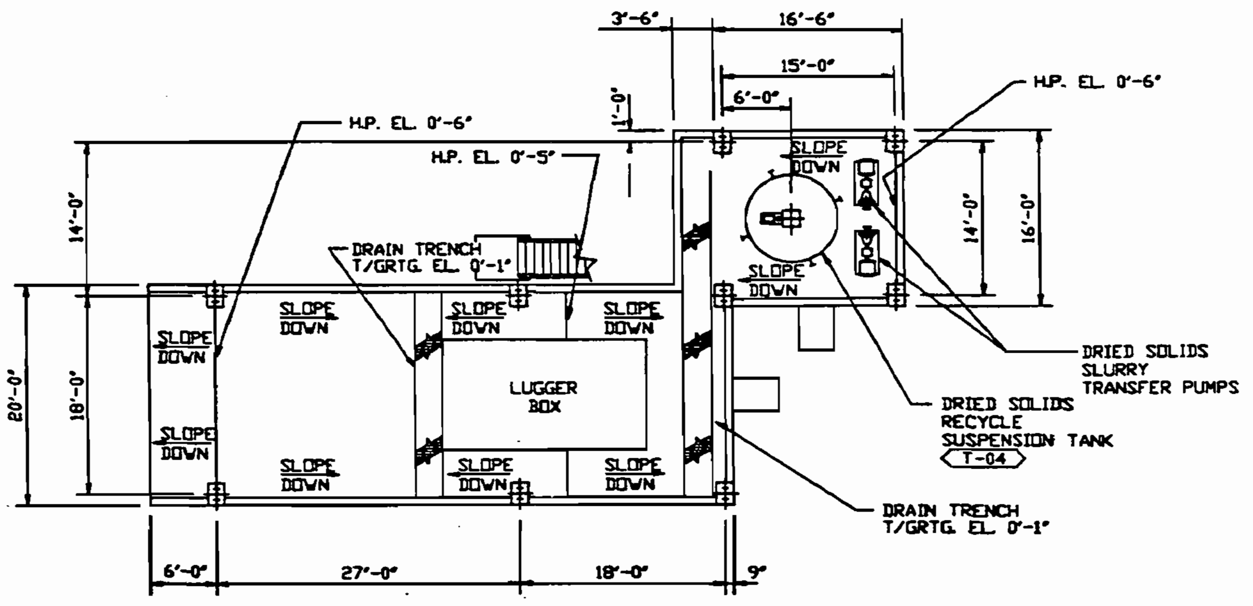

PLAN ABOVE GRADE

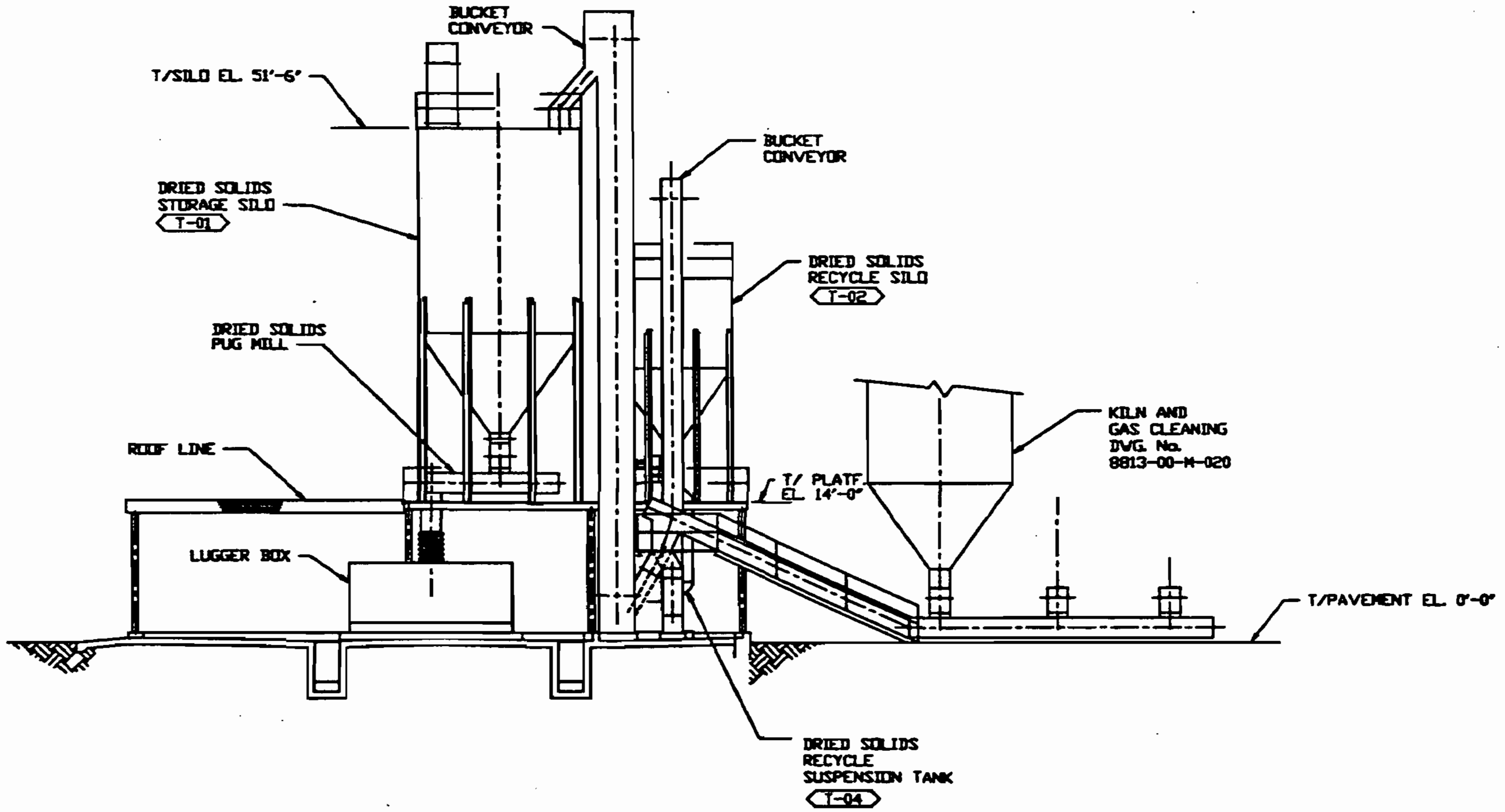

SECTION Ⓐ

0 4' 8' 16'
SCALE

DICK M. MILLER No. 20327

This document has been prepared and is approved by the for assistance in environmental permit applications only. It is neither approved nor is it to be used for equipment or material procurement, construction or any other purpose.

E	9/21/99	REVISED AND REISSUED FOR PERMIT	A.M.S.	
D	9/08/88	GENERAL REVISION	T.R.	R.J.M.
C	5/01/88	GEN. REVISION & REISSUED FOR PERMIT	T.R.	AMS
B	4/27/88	ISSUED FOR PERMIT	M.K.	AMS
A	4/26/88	ISSUED FOR INTERNAL REVIEW	M.K.	AMS
REV.	DATE	REVISION	BY	CHKD

PROJECT

FLORIDA FIRST
PROCESSING, INC.

SCALE:

International
WasteEnergy
Systems
ST. LOUIS, MO.

TITLE

GENERAL ARRANGEMENT
ORGANIC TREATMENT
DRIED SOLIDS SYSTEM
PLANS AND SECTIONS

DRAWN	DATE	APPD	DATE	DRAWING NO.	REV.
M.K.	4/26/88				
CHKD	DATE		DATE	8813-00-M-026	E

FILE NAME \8813\8813M026.DWG

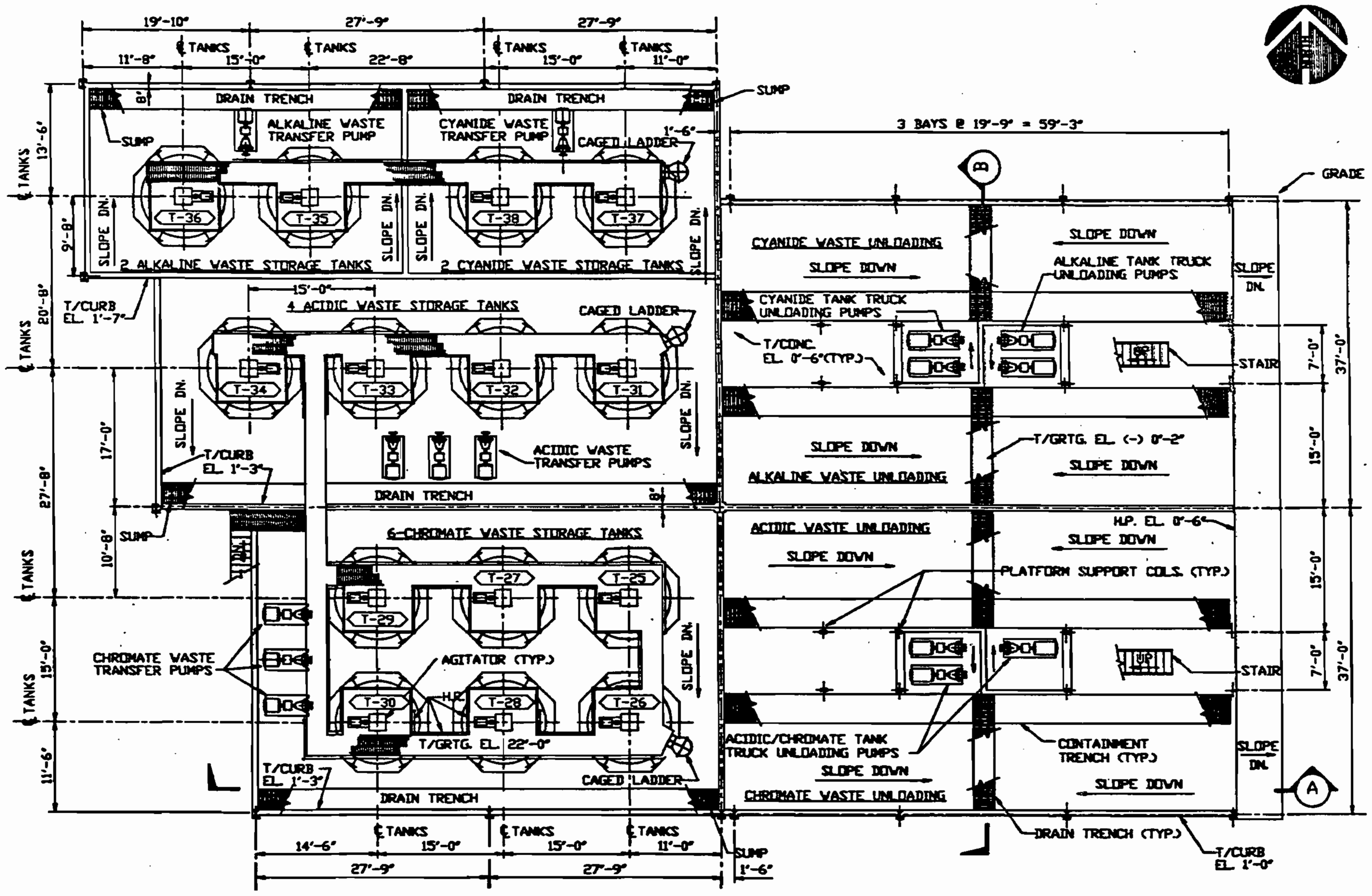

PLAN

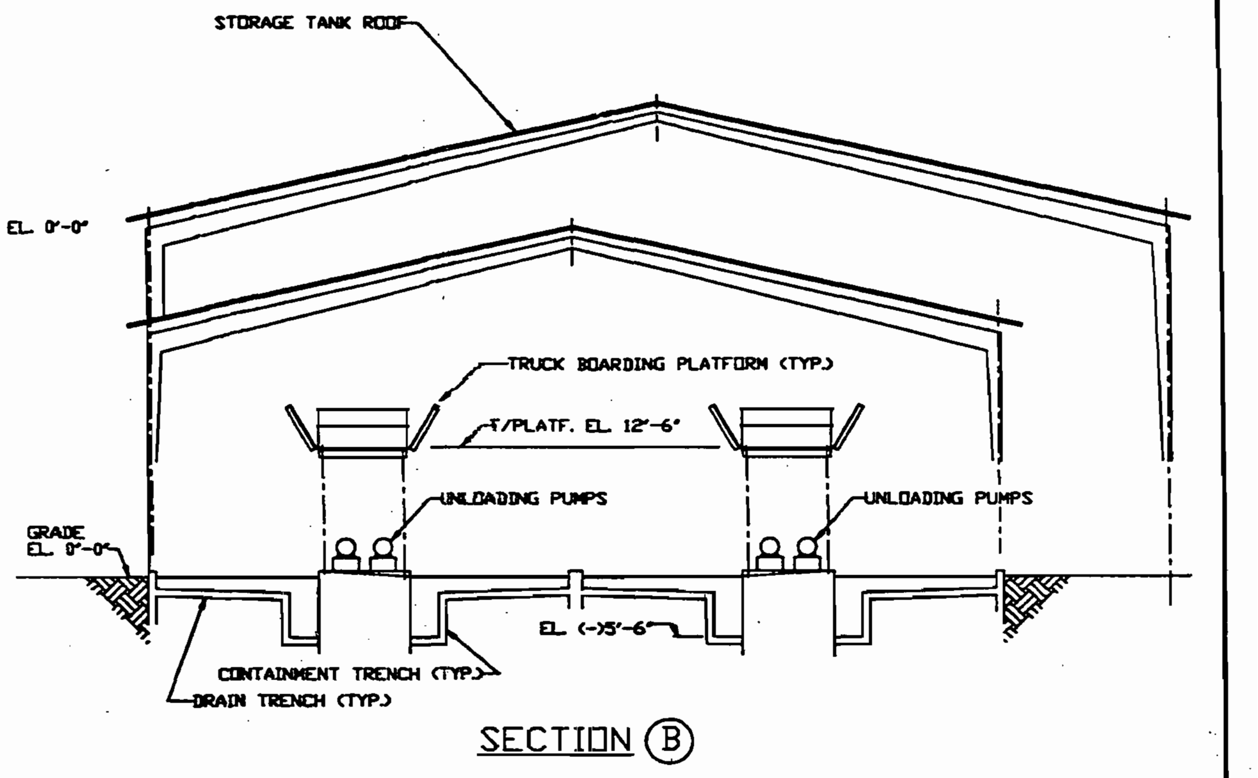

SECTION B

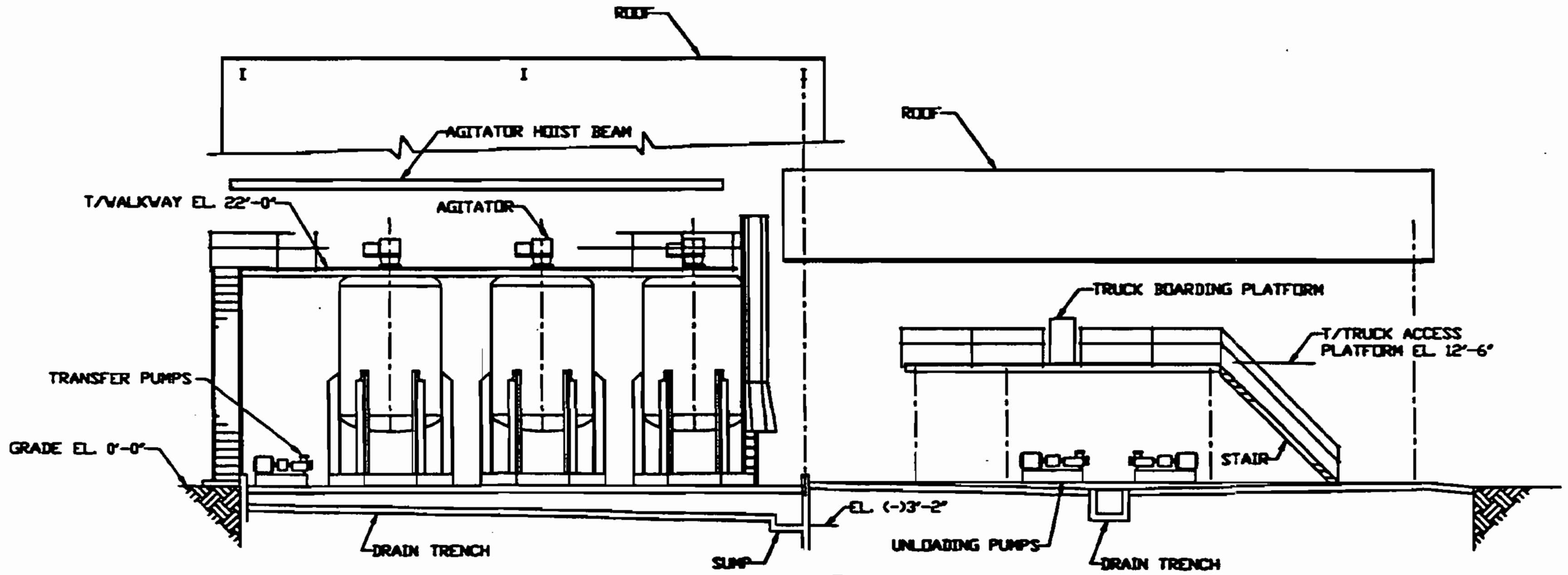

SECTION A

SCALE 0 4' 8' 16'

DICK M. MILLER
No. 20227

This document has been prepared and is approved by me for inclusion in environmental permit applications only. It is neither approved nor is it to be used for execution or material procurement, construction or any other purpose.

F	7/[illegible]	REVISED AND REISSUED FOR PERMIT	ANS	
E	9/08/[illegible]	GENERAL REVISION	M.K.	W.J.H.
D	[illegible]	GEN. REVISION & REISSUED FOR PERMIT	T.R.	WJH
C	4/20/[illegible]	ISSUED FOR PERMIT	M.K.	WJH
B	3/3/[illegible]	ISSUED FOR CLIENT REVIEW	RJM	WJH
A	01/03/[illegible]	ISSUED FOR INTERNAL REVIEW	M.K.	WJH
REV.	DATE	REVISION	BY	CHKD

PROJECT
FLORIDA FIRST
PROCESSING, INC.

SCALE:

International
WasteEnergy
Systems
ST. LOUIS, MO.

TITLE
GENERAL ARRANGEMENT
INORGANIC TREATMENT
PUMPABLE WASTE UNLOADING & STORAGE
PLAN AND SECTIONS

DRAWN	DATE	APPD	DATE	DRAWING NO.	REV.
M.K.	12/28/88				
CHKD	DATE		DATE	8813-00-M-030	F

FILE NAME: \8813\8813M030.DWG

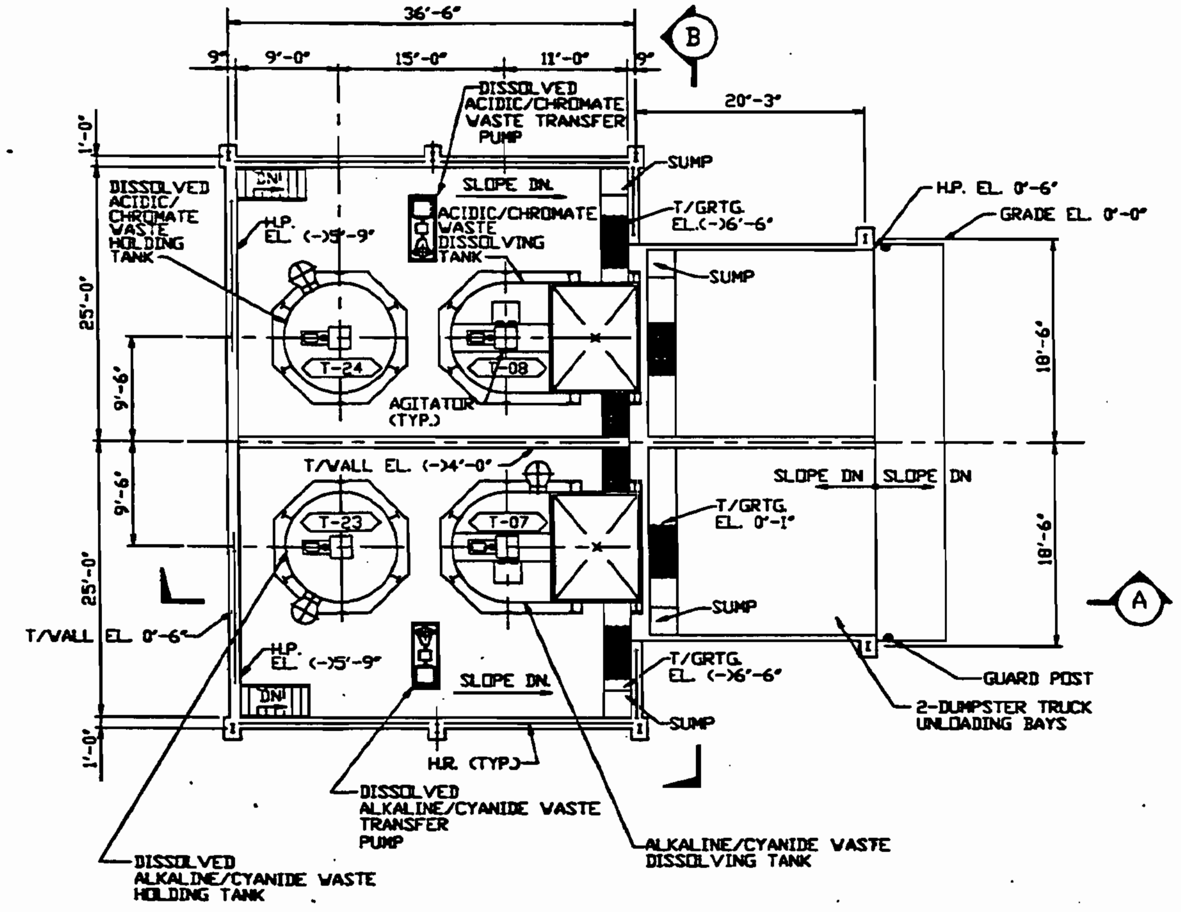

PLAN

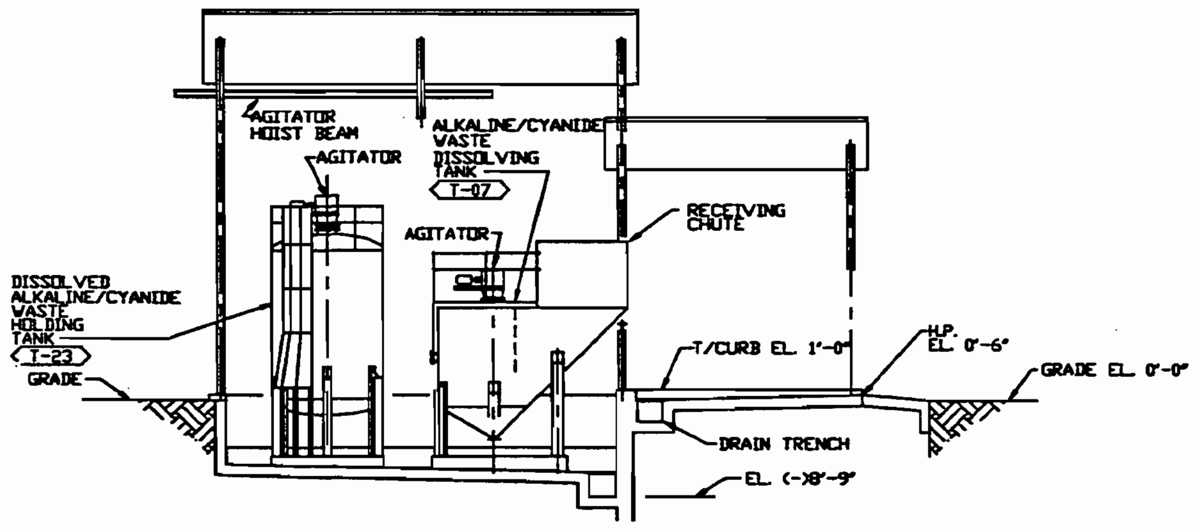

SECTION A

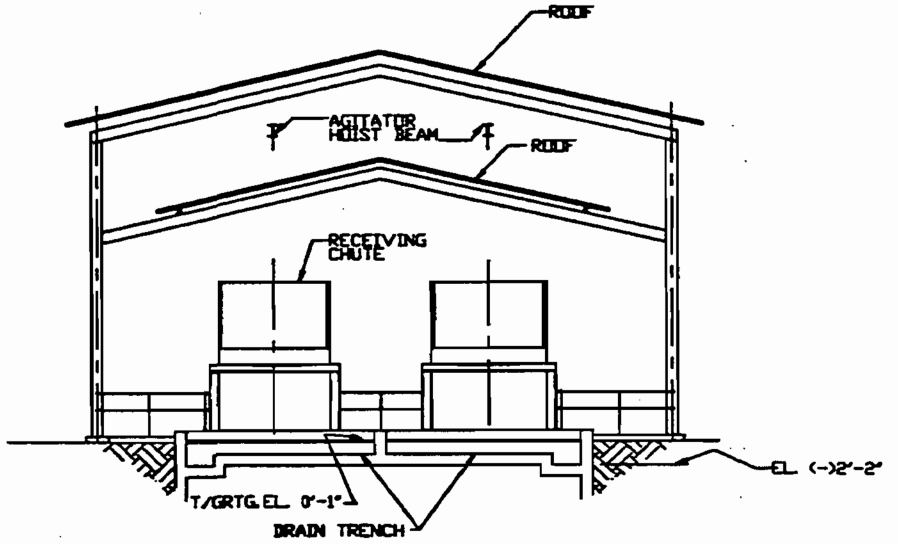

SECTION B

0 4' 8' 16'
SCALE

DICK M. MILLER

This document has been prepared and is approved by me for inclusion in environmental permit applications only. It is neither approved nor is it to be used for equipment or material procurement, construction or any other purpose.

REV.	DATE	REVISION	BY	CHKD
E	7/24/	REVISED AND REISSUED FOR PERMIT	AMS	
D	9/08/89	GENERAL REVISIONS	T.R.	W.J.H.
C	4/18/89	ISSUED FOR PERMIT	M.K.	W.J.H.
B	3/3/89	ISSUED FOR CLIENT REVIEW	M.K.	W.J.H.
A	12/27/88	ISSUED FOR INTERNAL REVIEW	R.J.H.	W.J.H.

PROJECT
FLORIDA FIRST
PROCESSING, INC.

SCALE:

International
WasteEnergy
Systems
ST. LOUIS, MO.

TITLE
GENERAL ARRANGEMENT
INORGANIC TREATMENT
NON-PUMPABLE WASTE HANDLING
PLAN AND SECTIONS

DRAWN	DATE	APPD	DATE	DRAWING NO.	REV.
R.J.H.	12/27/88			8813-00-M-031	E
CHKD	DATE		DATE		

FILE NAME: \8813\8813M031.DWG

E-3

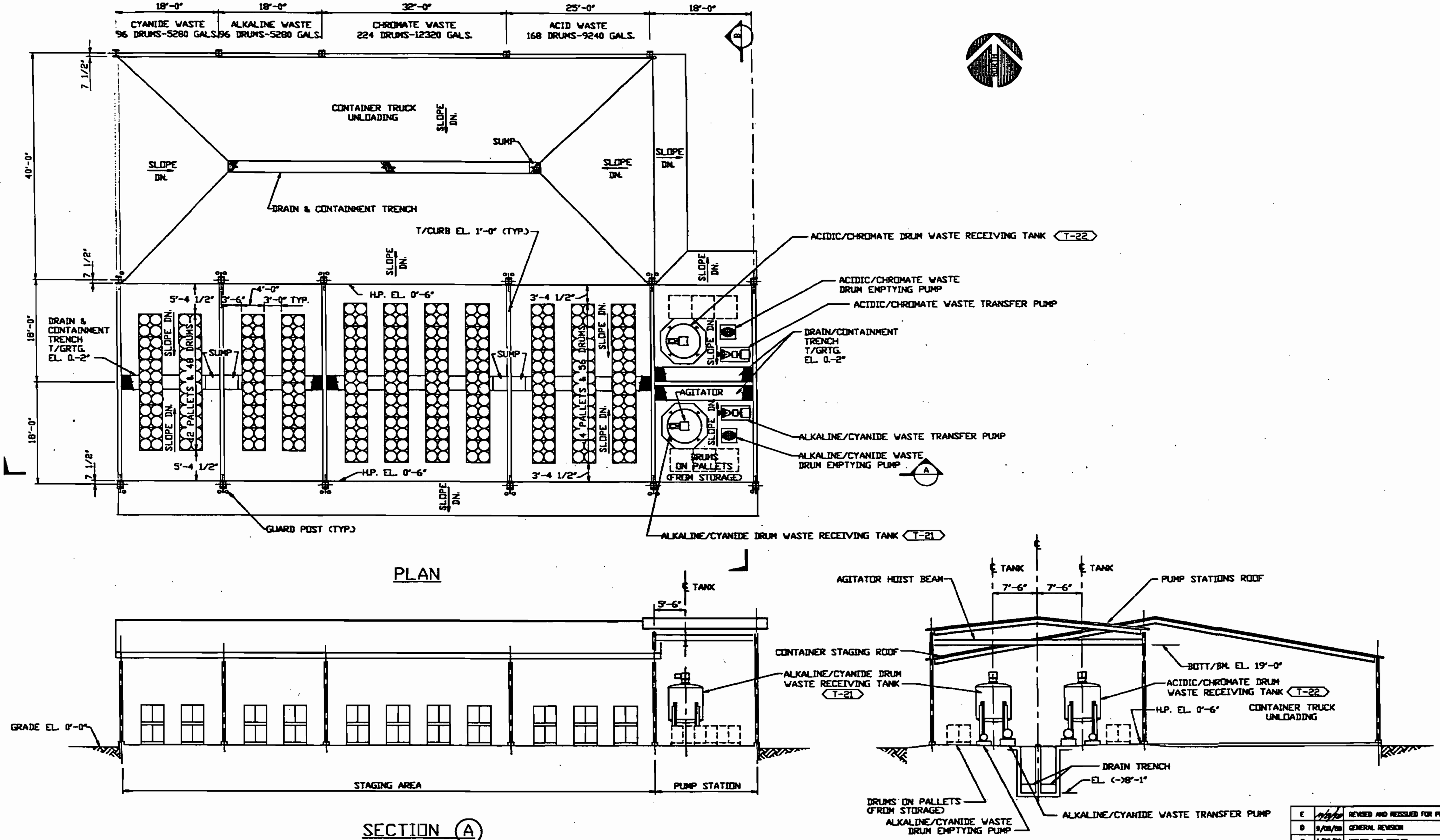

0 4' 8' 16'

SCALE

This document has been prepared and is approved by me for inclusion in environmental permit applications only. It is neither approved nor is it to be used for equipment or material procurement, construction or any other purpose.

DICK M. MILLER
No. 20927
STATE OF FLORIDA

SCALE:

International WasteEnergy Systems
ST. LOUIS, MO.

REV.	DATE	REVISION	BY	CHKD
E	[illegible]	REVISED AND REISSUED FOR PERMIT	AMS	[illegible]
D	9/08/89	GENERAL REVISION	M.K.	W.A.H.
C	4/20/89	ISSUED FOR PERMIT	M.K.	WAH
B	3/3/89	ISSUED FOR CLIENT REVIEW	M.A.	WAH
A	1/3/89	ISSUED FOR INTERNAL REVIEW	M.K.	WAH

PROJECT
FLORIDA FIRST PROCESSING, INC.

TITLE
GENERAL ARRANGEMENT–INORGANIC TREATMENT
CONTAINER UNLOADING, STAGING AND
PUMP STATION
PLAN AND SECTIONS

DRAWN	DATE	APPD	DATE	DRAWING NO.	REV.
M.K.	12/27/88			8813-00-M-032	E
CHKD	DATE		DATE		

FILE NAME: \8813\

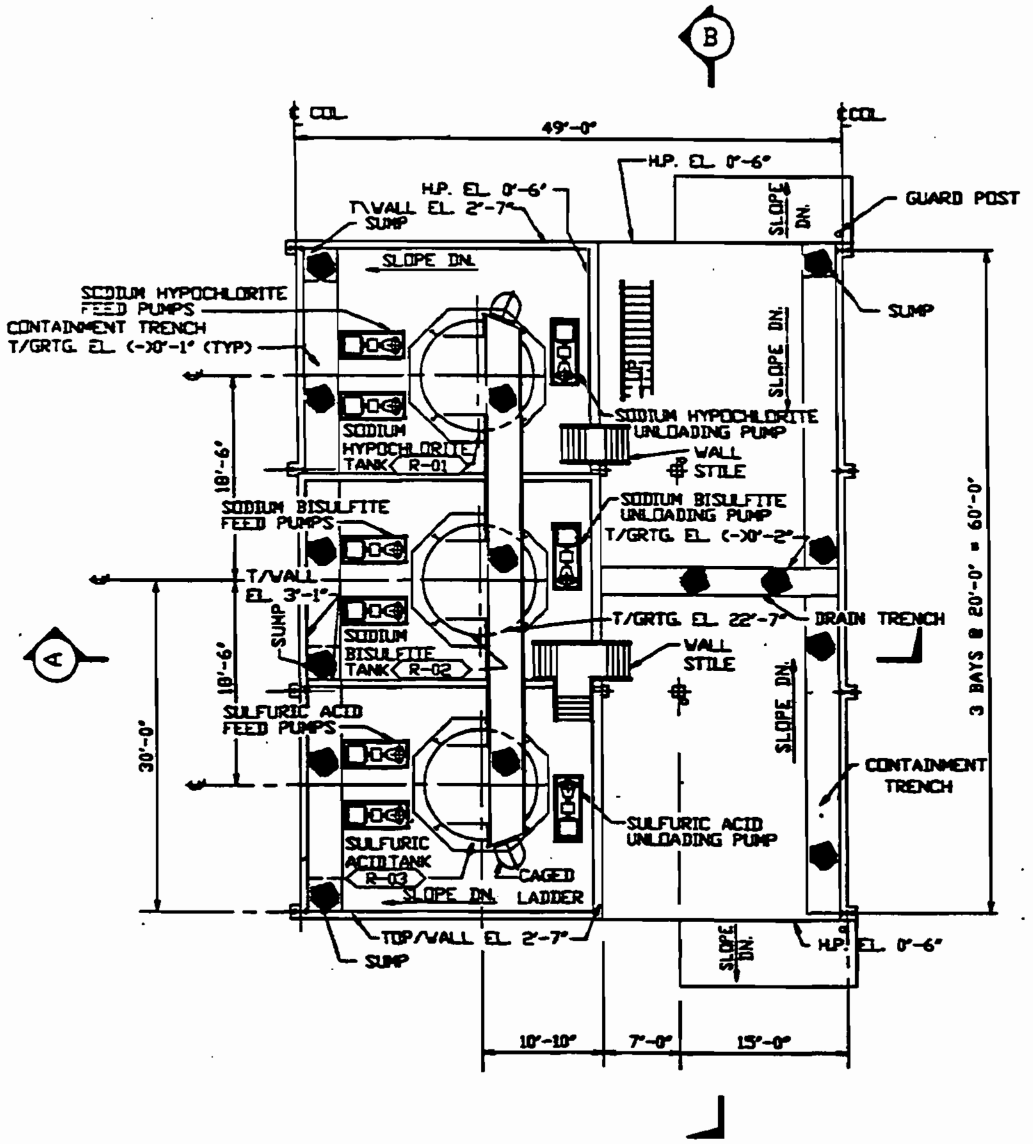

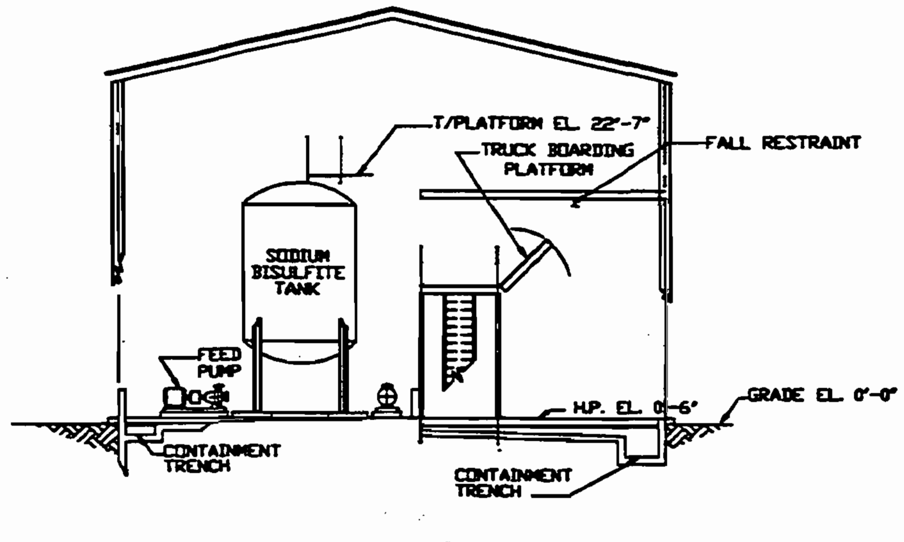

SECTION Ⓐ

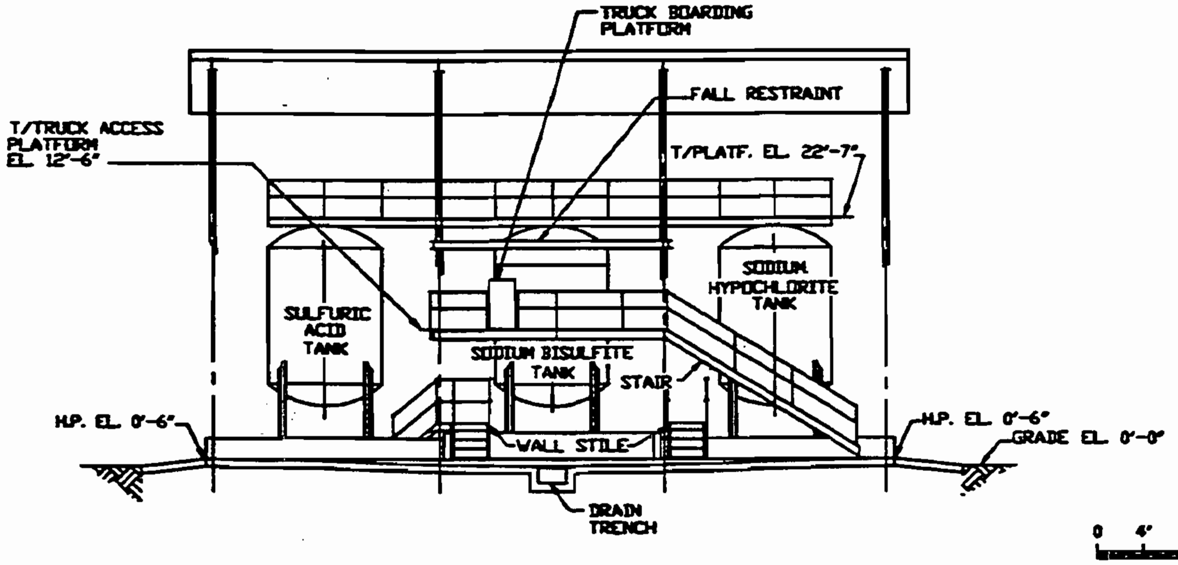

SECTION Ⓑ

0 4' 8' 16'
SCALE

No. 20327

This document has been prepared and is approved by me for inclusion in environmental permit applications only. It is neither approved nor is it to be used for equipment or material procurement, construction or any other purpose.

REV.	DATE	REVISION	BY	CHKD
E	[illegible]	REVISED AND REISSUED FOR PERMIT	AMS	[illegible]
D	9/08/89	GENERAL REVISION	J.B.	W.J.M.
C	4/18/89	ISSUED FOR PERMIT	M.K.	W.J.M.
B	3/3/89	ISSUED FOR CLIENT REVIEW	M.K.	W.J.M.
A	1/18/89	ISSUED FOR INTERNAL REVIEW	GHB	W.J.M.

SCALE:

International
WasteEnergy
Systems
ST. LOUIS, MO.

PROJECT
FLORIDA FIRST
PROCESSING, INC.

TITLE
GENERAL ARRANGEMENT
INORGANIC TREATMENT
REAGENT UNLOADING AND STORAGE
PLAN AND SECTIONS

DRAWN	DATE	APPD	DATE	DRAWING NO.	REV.
GHB	12/30/88			8813-00-M-033	E
CHKD	DATE		DATE		

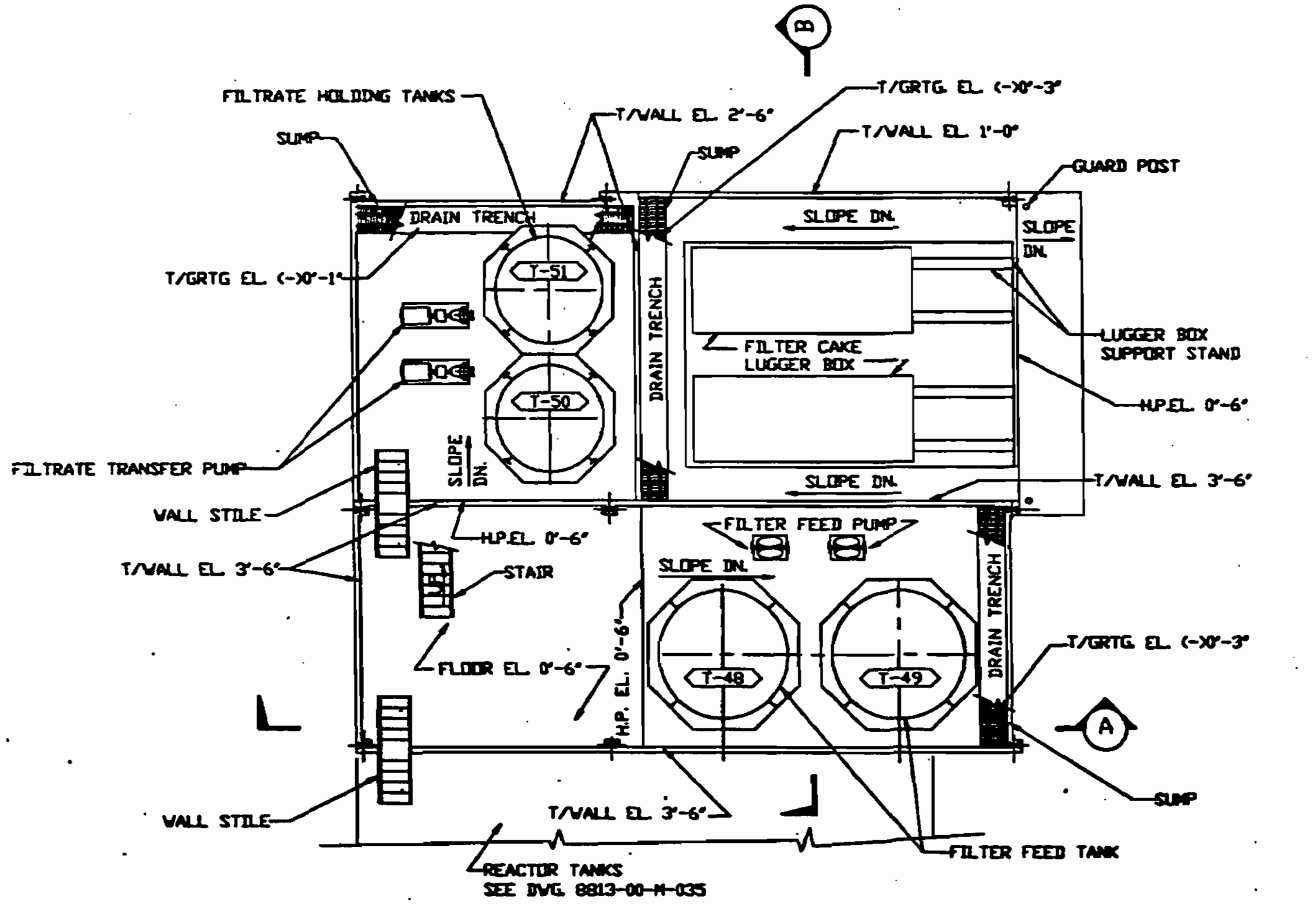

LOWER PLAN

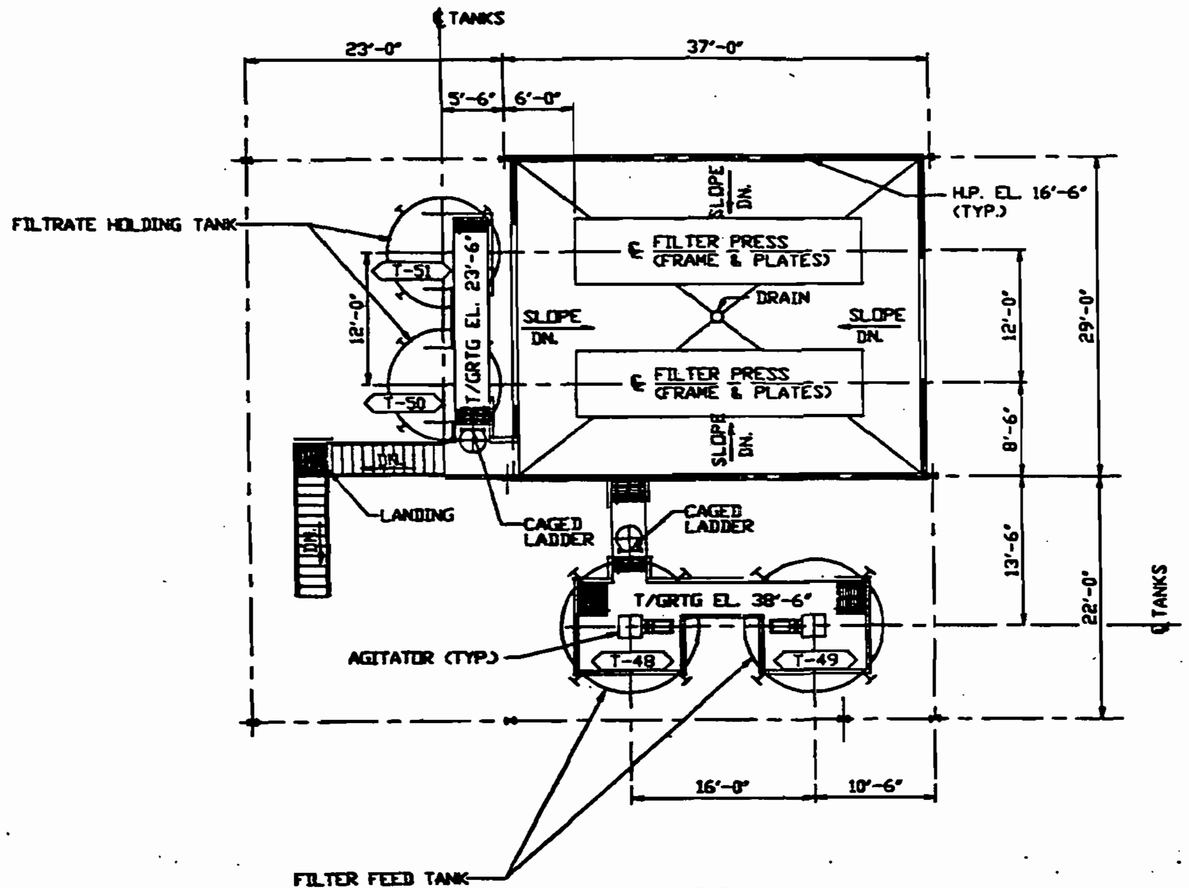

UPPER PLAN

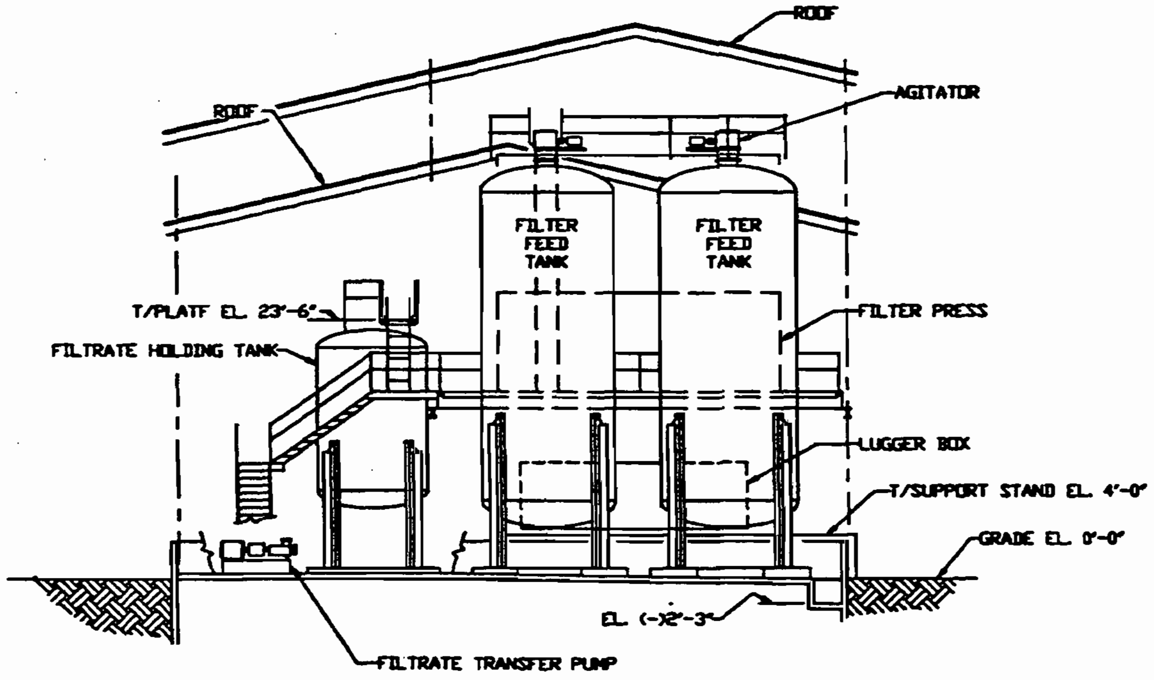

SECTION (A)

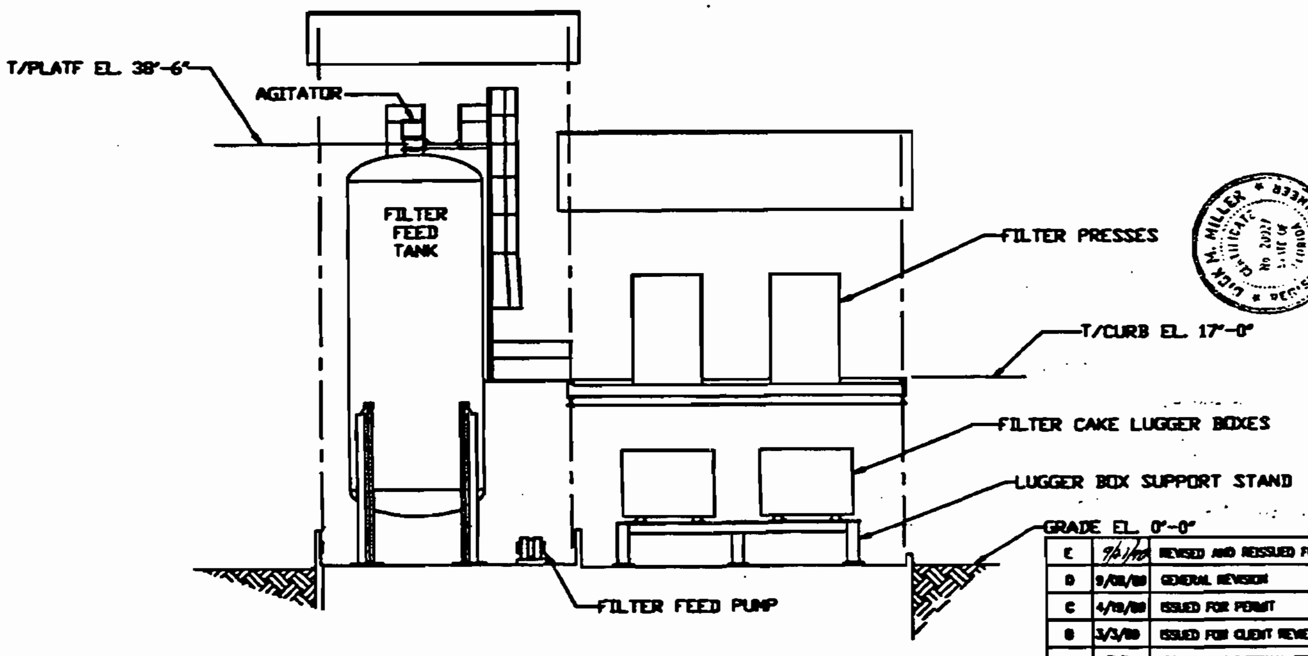

SECTION (B)

0 4' 8' 16'
SCALE

DICK M. MILLER
No. 20221

This document has been prepared and is approved by me for inclusion in environmental permit applications only. It is neither approved nor is it to be used for bid/proposal or material procurement, construction or any other purpose.

REV.	DATE	REVISION	BY	CHKD
E	9/6/90	REVISED AND REISSUED FOR PERMIT	AMS	
D	9/08/89	GENERAL REVISION	J.R.	W.J.H.
C	4/19/89	ISSUED FOR PERMIT	M.K.	W.J.H.
B	3/3/89	ISSUED FOR CLIENT REVIEW	M.K.	W.J.H.
A	1/3/89	ISSUED FOR INTERNAL REVIEW	M.K.	W.J.H.

PROJECT
FLORIDA FIRST
PROCESSING, INC.

SCALE:

International
WasteEnergy
Systems
ST. LOUIS, MO.

TITLE
GENERAL ARRANGEMENT
INORGANIC TREATMENT
SLUDGE DEWATERING
PLANS & SECTIONS

DRAWN	DATE	APPD	DATE	DRAWING NO.	REV.
M.K.	1/3/89			8813-00-M-034	E
CHKD	DATE		DATE		

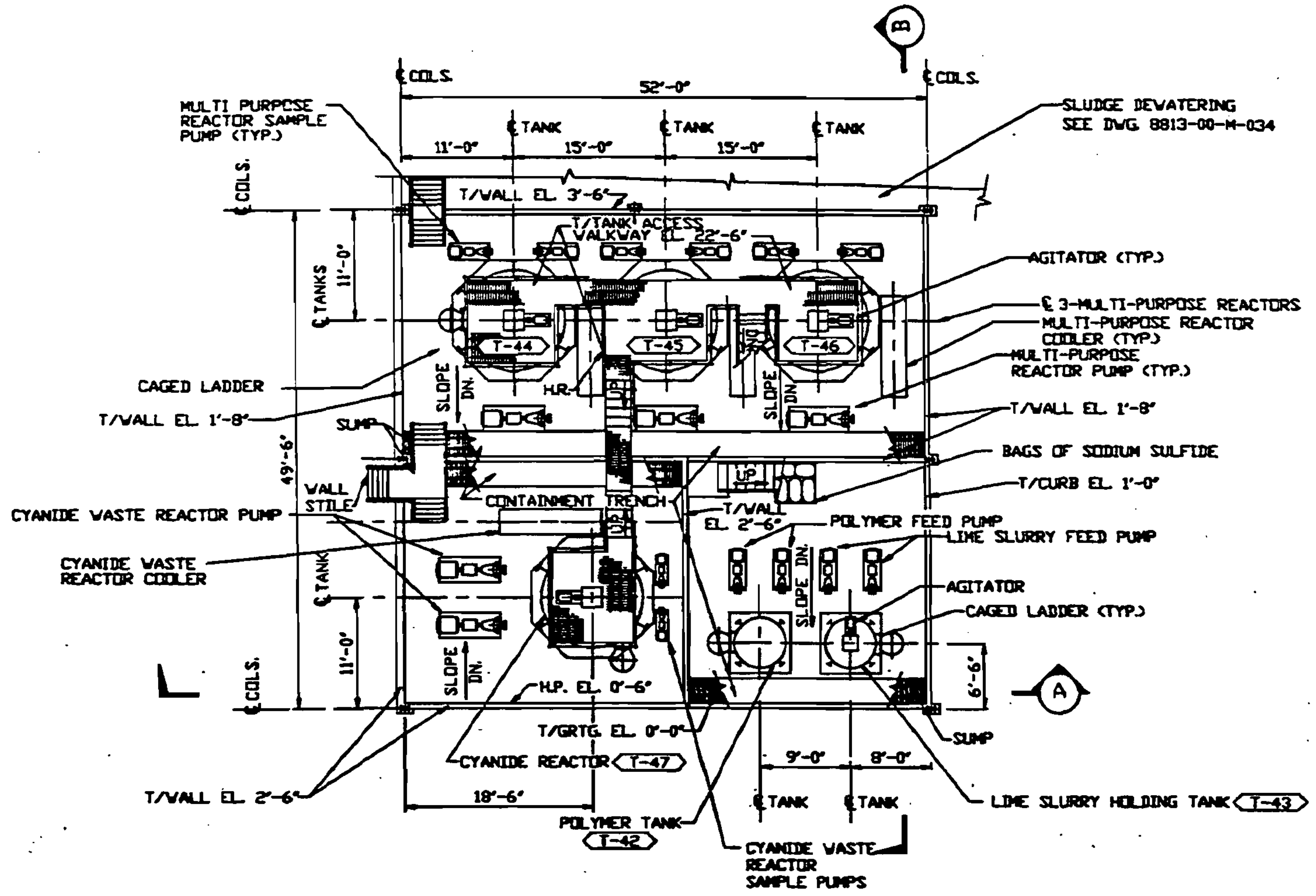

PLAN

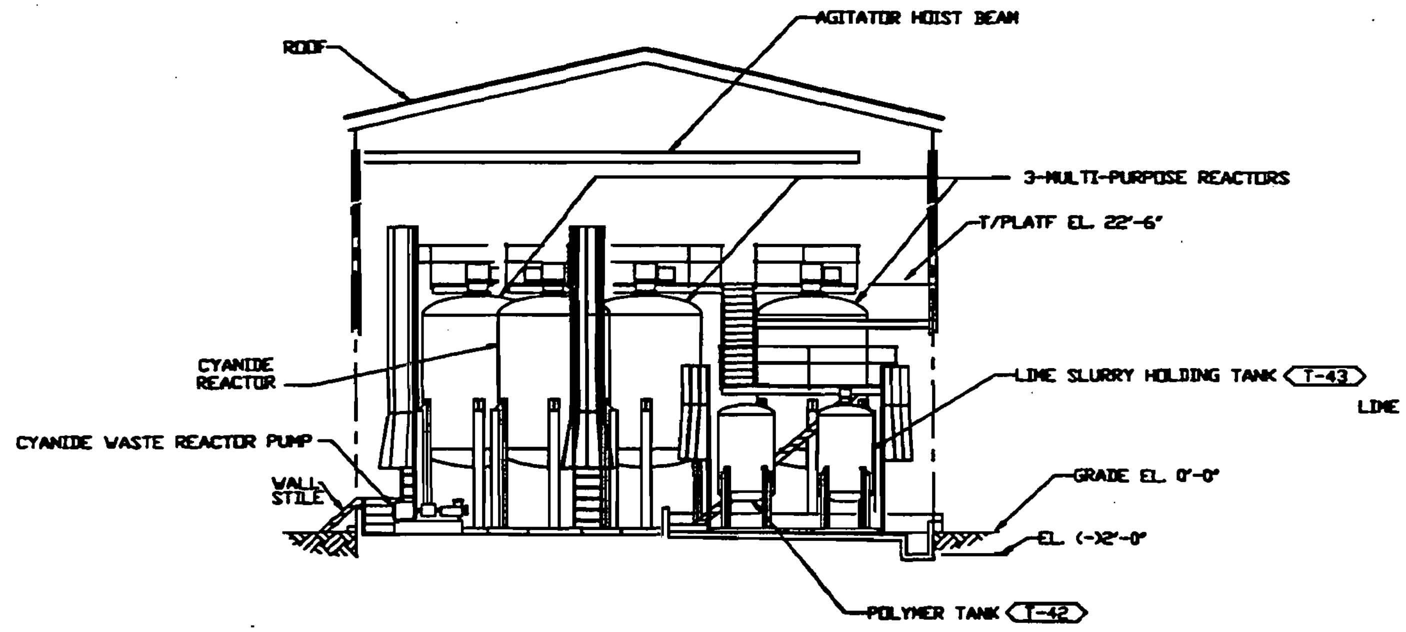

SECTION (A)

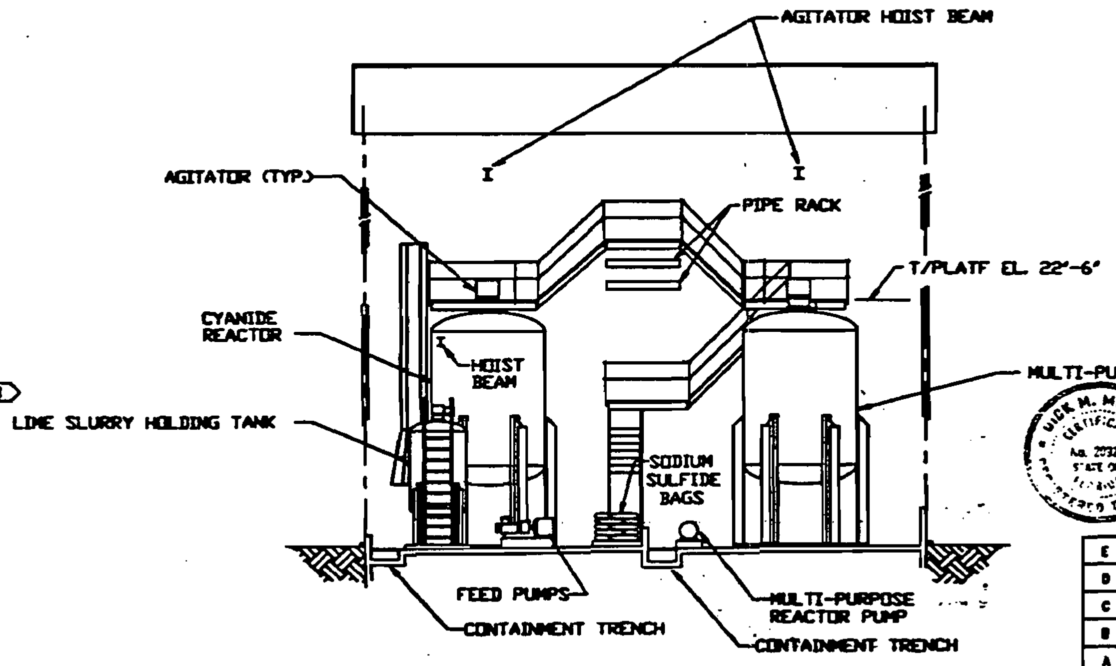

SECTION (B)

0 4' 8' 16'
SCALE

DICK M. MILLER No. 20327

This document has been prepared and is approved by me for inclusion in environmental permit applications only. It is neither approved nor is it to be used for equipment or material procurement, construction or any other purpose.

REV.	DATE	REVISION	BY	CHKD
E	9/27/9[illegible]	REVISED AND REISSUED FOR PERMIT	A.H.S.	[illegible]
D	9/8/88	GENERAL REVISION	J.B.	R.J.H.
C	4/19/88	ISSUED FOR PERMIT	M.K.	R.J.H.
B	3/3/88	ISSUED FOR CLIENT REVIEW	M.K.	R.J.H.
A	1/11/88	ISSUED FOR INTERNAL REVIEW	M.K.	R.J.H.

PROJECT

FLORIDA FIRST
PROCESSING, INC.

SCALE:

International
WasteEnergy
Systems
ST. LOUIS, MO.

TITLE

GENERAL ARRANGEMENT
INORGANIC TREATMENT
REACTOR TANKS
PLAN AND SECTIONS

DRAWN	DATE	APPD	DATE	DRAWING NO.	REV.
M.K.	1/4/88				
CHKD	DATE		DATE	8813-00-M-035	E

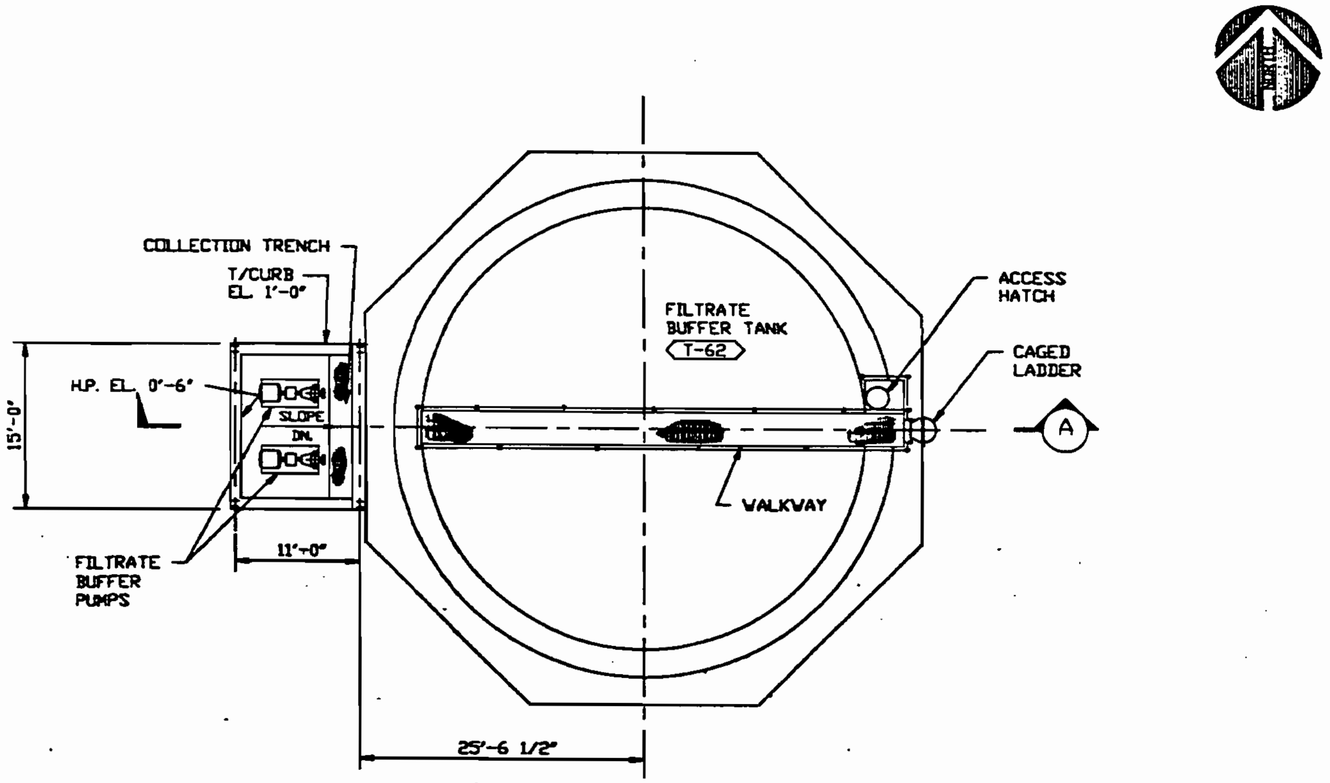

PLAN

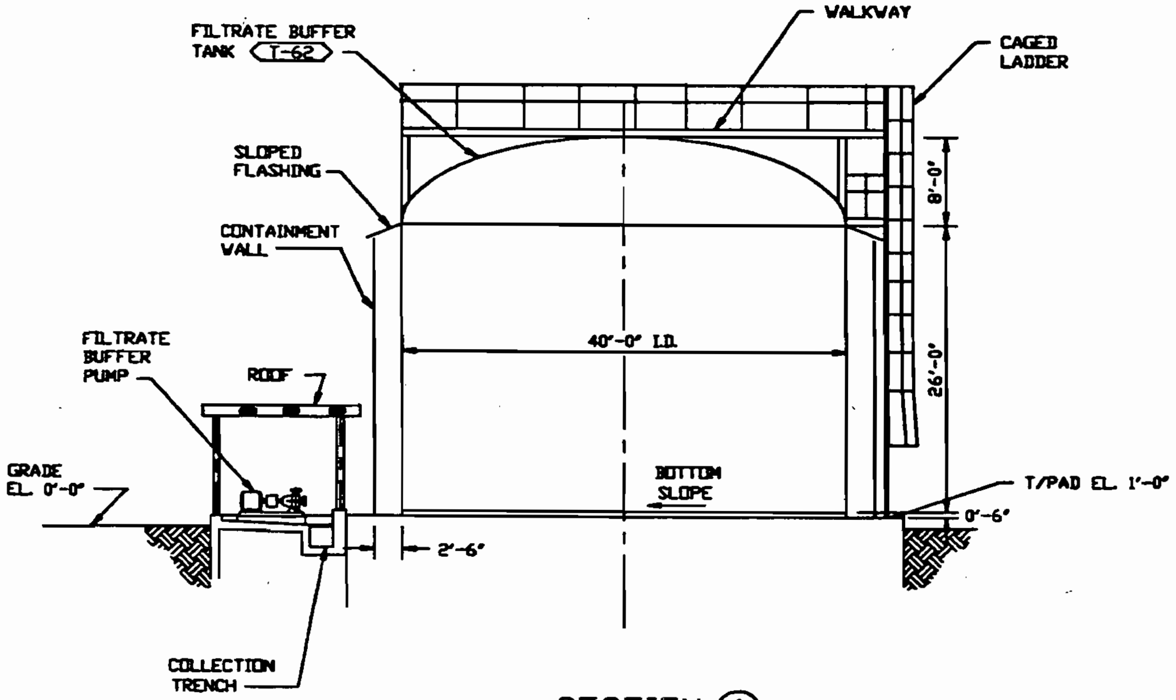

SECTION (A)

This document has been prepared and is approved by me for inclusion in environmental permit applications only. It is neither approved nor is it to be used for equipment or material procurement, construction or any other purpose.

Dick M. Miller

DICK M. MILLER
No. 20927

0 4' 8' 16'
SCALE

C	10/8/90	ISSUED FOR PERMIT	AHS	ECS
B	10/03/9	ISSUED FOR CLIENT REVIEW	AHS	ECS
A	10/03/9	ISSUED FOR INTERNAL REVIEW	AHS	ECS
REV.	DATE	REVISION	BY	CHKD

PROJECT
FLORIDA FIRST
PROCESSING, INC.

SCALE:

International
WasteEnergy
Systems
ST. LOUIS, MO.

TITLE
GENERAL ARRANGEMENT
INORGANIC TREATMENT
FILTRATE BUFFER TANK
PLAN & SECTION

DRAWN	DATE	APPD	DATE	DRAWING NO.	REV.
WLF	10/1/90			8813-00-M-036	C
CHKD	DATE		DATE		

FILE NAME: \8813\8813M036.DWG

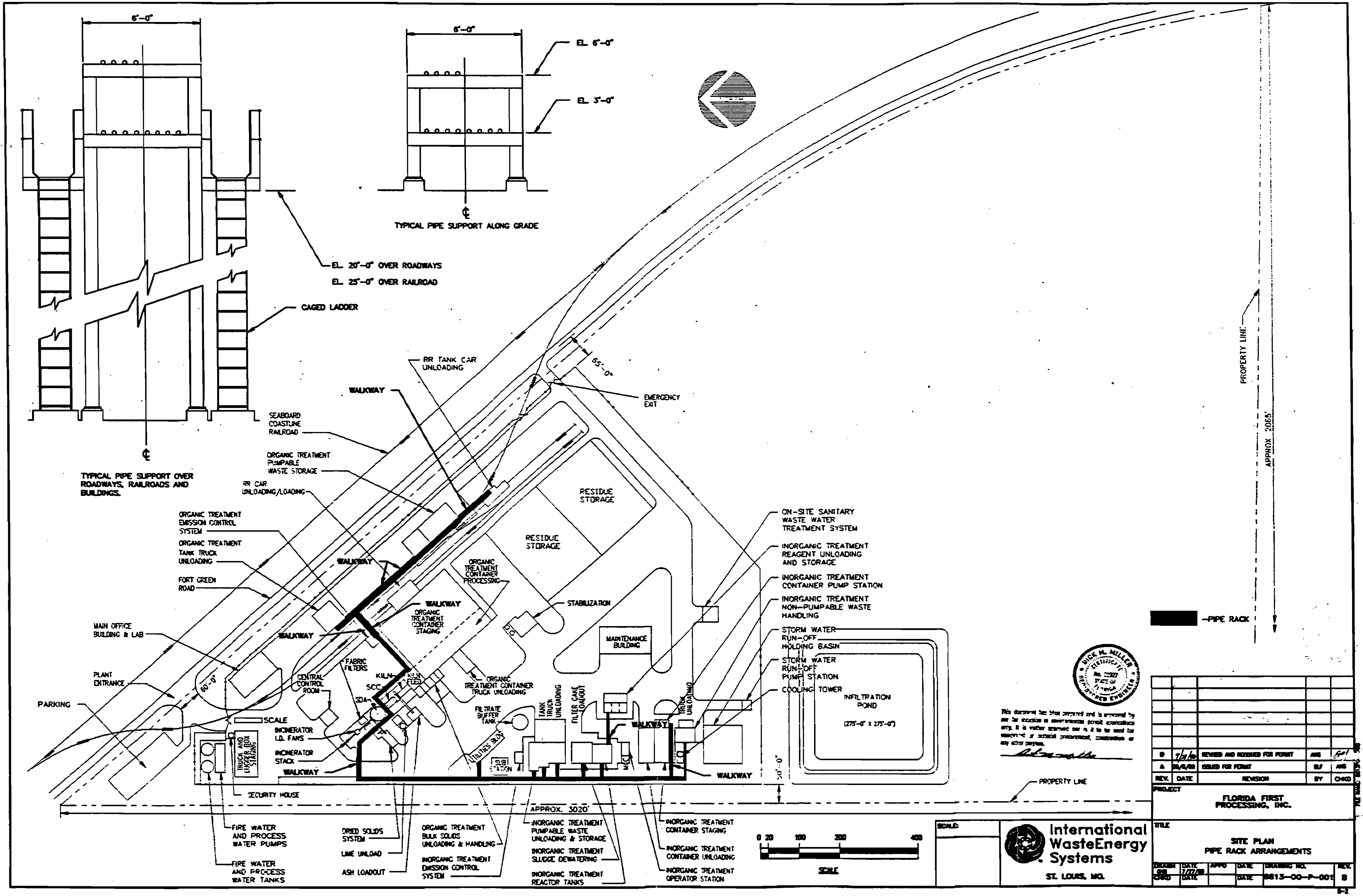

DICK M. MILLER No. 22327 STATE OF FLORIDA

This document has been prepared and is approved by me for inclusion in environmental permit applications only. It is neither approved nor is it to be used for construction or actual procurement, construction or any other purpose.

REV.	DATE	REVISION	BY	CHKD
B	9/21/90	REVISED AND REISSUED FOR PERMIT	AMS	[illegible]
A	08/6/89	ISSUED FOR PERMIT	BLF	AMS

SCALE:

International WasteEnergy Systems
ST. LOUIS, MO.

PROJECT
FLORIDA FIRST PROCESSING, INC.

TITLE
SITE PLAN
PIPE RACK ARRANGEMENTS

DRAWN	DATE	APPD	DATE	DRAWING NO.	REV.
GB	7/27/89			8813-00-P-001	B
CHKD	DATE		DATE		

8-2

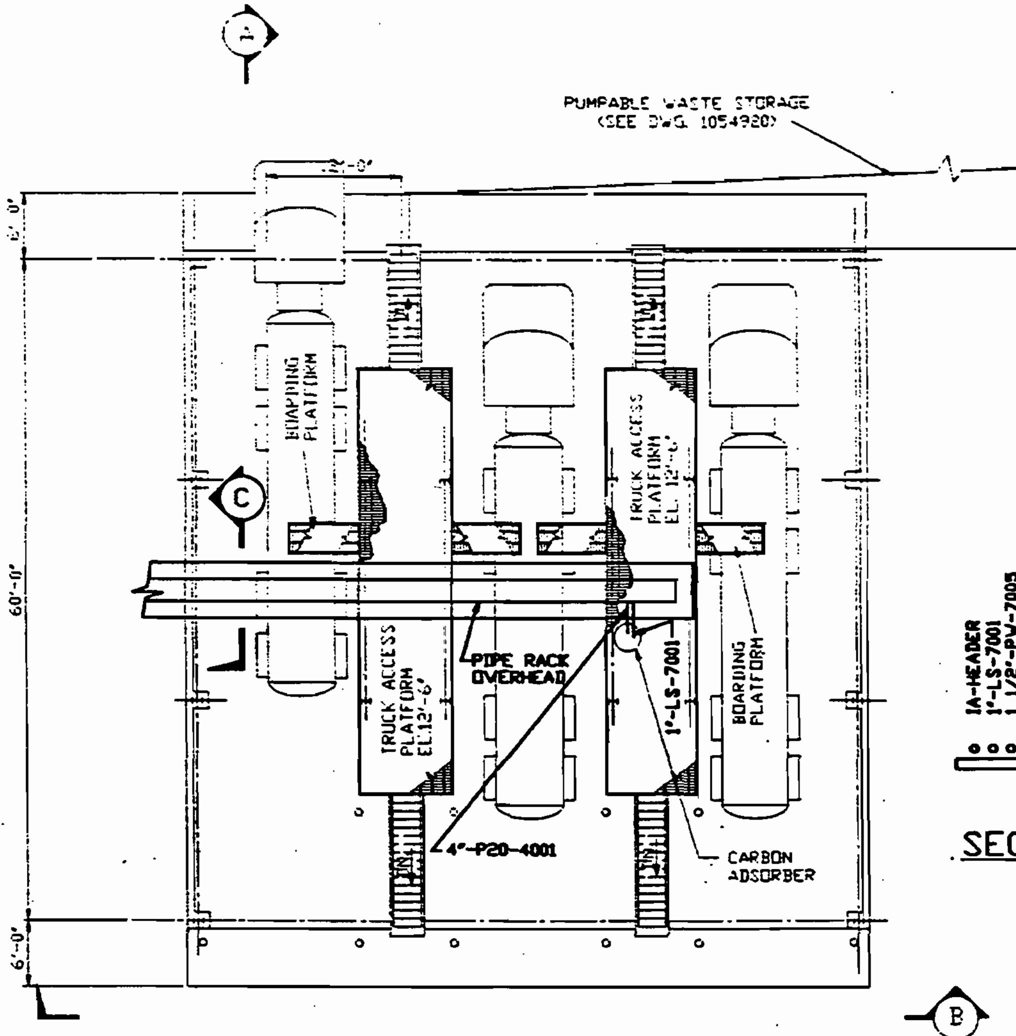

UPPER PLAN

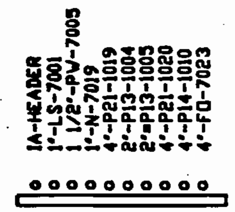

SECTION Ⓒ

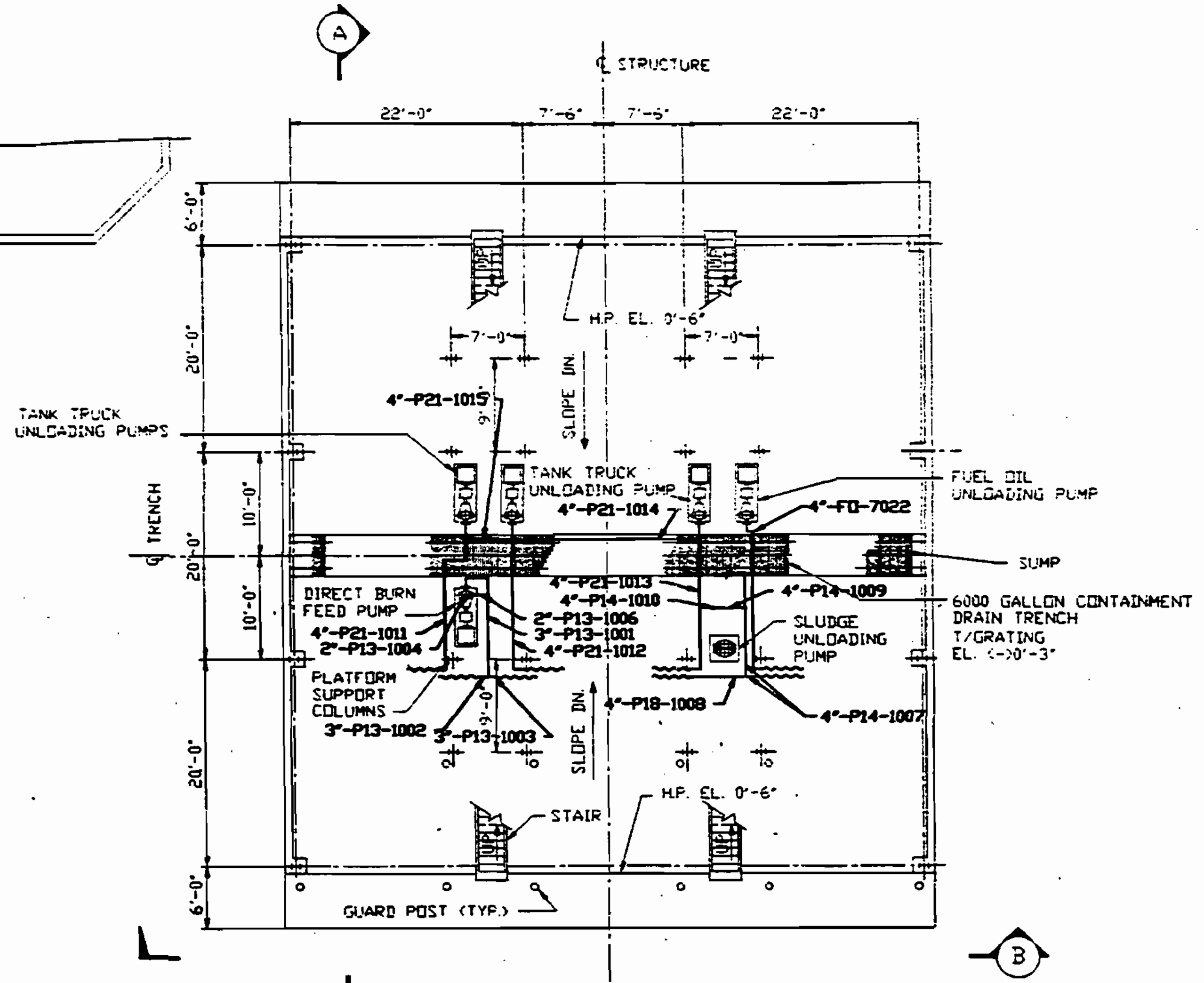

GROUND FLOOR PLAN

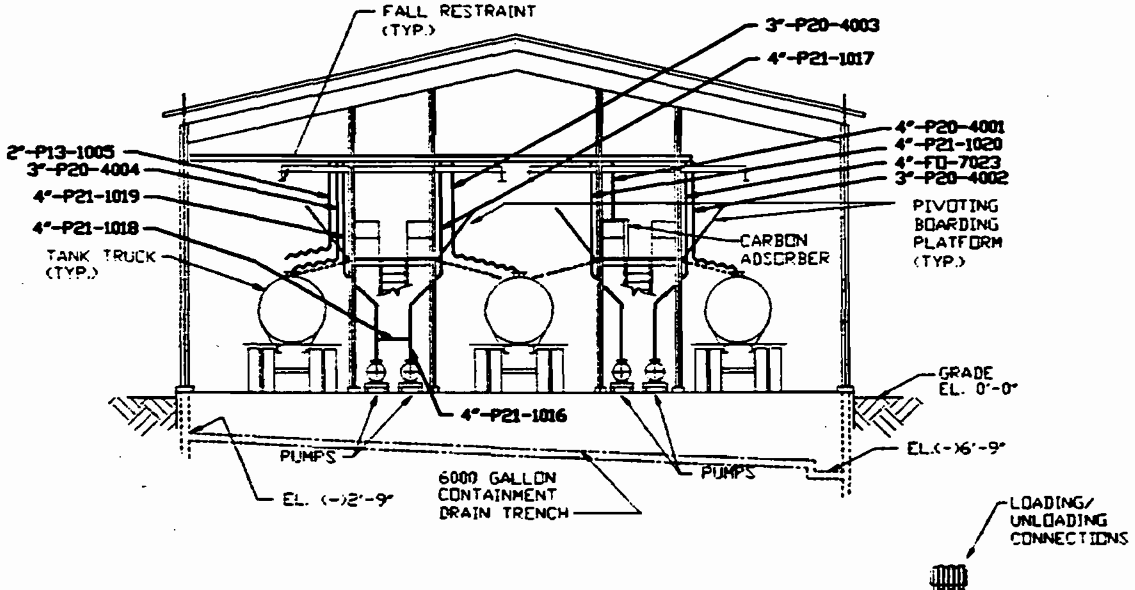

SECTION Ⓑ

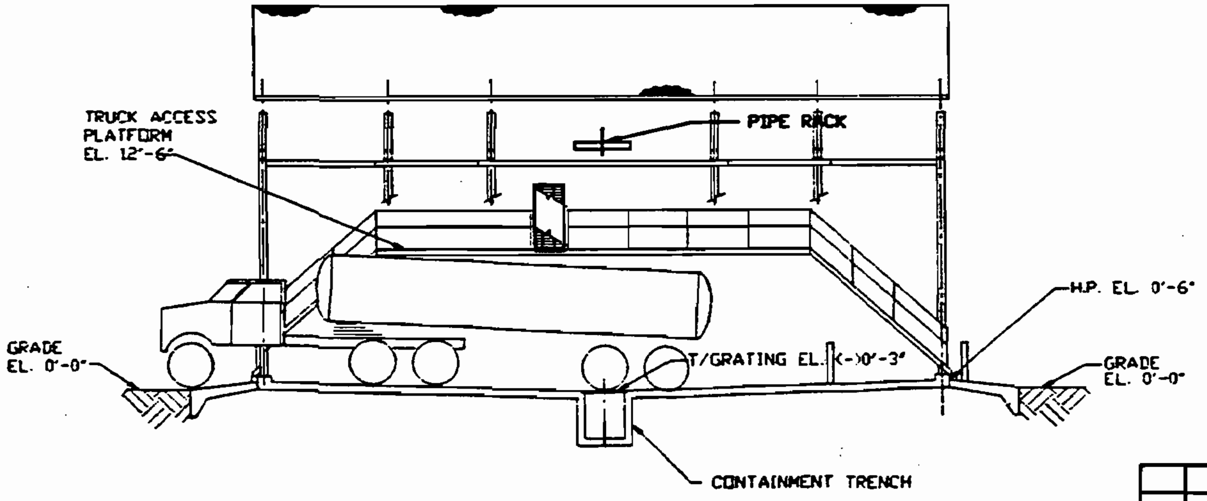

SECTION Ⓐ

0 4' 8' 16'
SCALE

DICK M. MILLER
STATE OF FLORIDA
REGISTERED ENGINEER

This document has been prepared and is approved for use for inclusion in environmental permit applications only. It is neither approved nor is it to be used for equipment or material procurement, construction or any other purpose.

REV.	DATE	REVISION	BY	CHKD
B	9/21/90	REVISED AND REISSUED FOR PERMIT	AHS	DM
A	9/6/89	ISSUED FOR PERMIT	BLF	AHS

PROJECT
FLORIDA FIRST
PROCESSING, INC.

SCALE:

International
WasteEnergy
Systems
ST. LOUIS, MO.

TITLE
GENERAL ARRANGEMENT
ORGANIC TREATMENT
TANK TRUCK UNLOADING
PLANS & SECTIONS
WITH PIPING

DRAWN	DATE	APPD	DATE	DRAWING NO.	REV.
GHB	8/4/89			8813-00-P-002	B
CHKD	DATE		DATE		

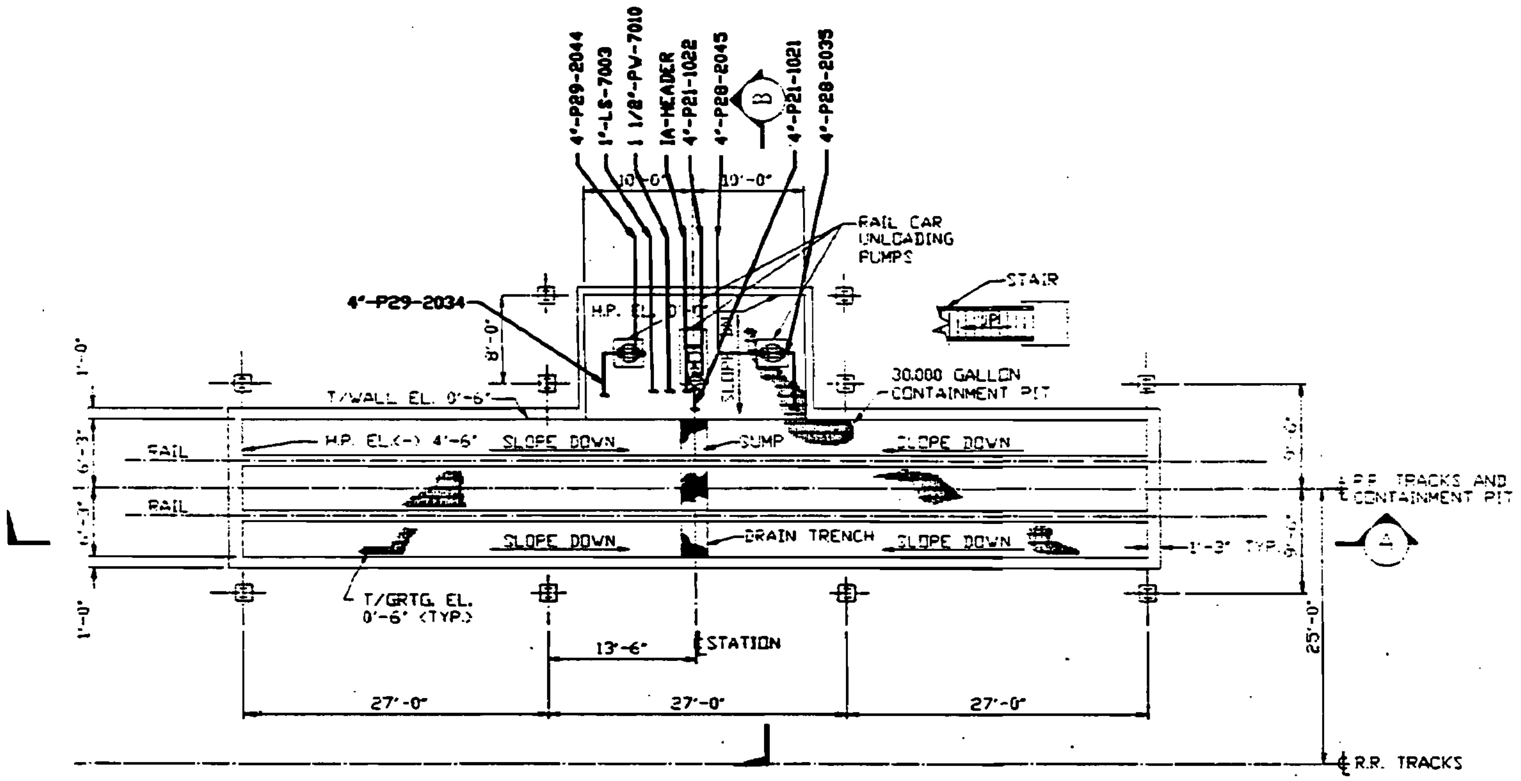

PLAN

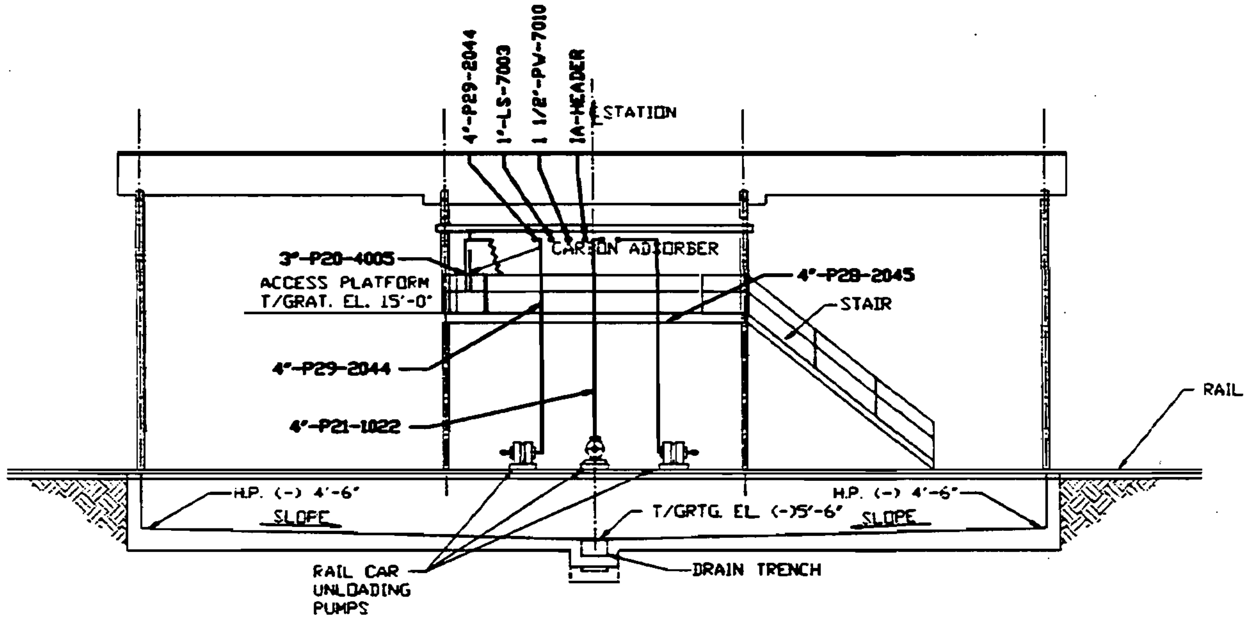

SECTION (A)

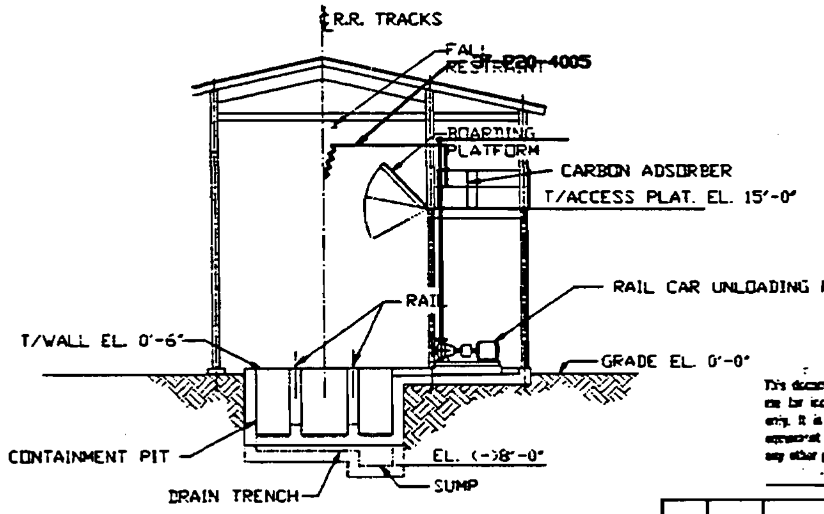

SECTION (B)

0 4' 8' 16'
SCALE

This document has been prepared and is intended by me for inclusion in environmental permit applications only. It is neither intended nor is it to be used for agreement or contract procurement, construction or any other purpose.

B	9/21/89	REVISED AND REISSUED FOR PERMIT	ANS	EC
A	9/8/89	ISSUED FOR PERMIT	ELF	ANS
REV.	DATE	REVISION	BY	CHKD

PROJECT
FLORIDA FIRST
PROCESSING, INC.

SCALE:

International
WasteEnergy
Systems
ST. LOUIS, MO.

TITLE
GENERAL ARRANGEMENT
RAILROAD TANK CAR UNLOADING
WITH PIPING

DRAWN	DATE	APPD	DATE	DRAWING NO.	REV.
GB	7/27/89				
CHKD	DATE		DATE	8813-00-P-003	B

Best Available Copy

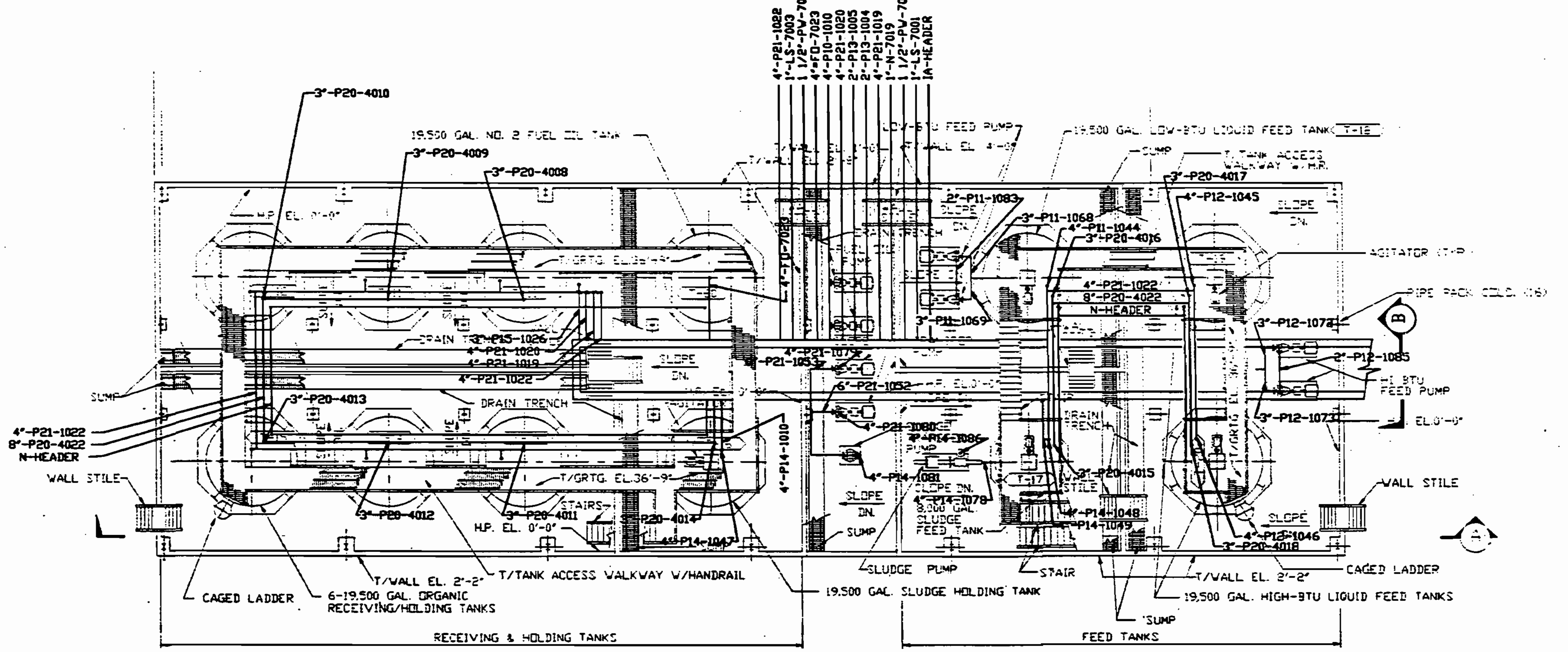

PLAN

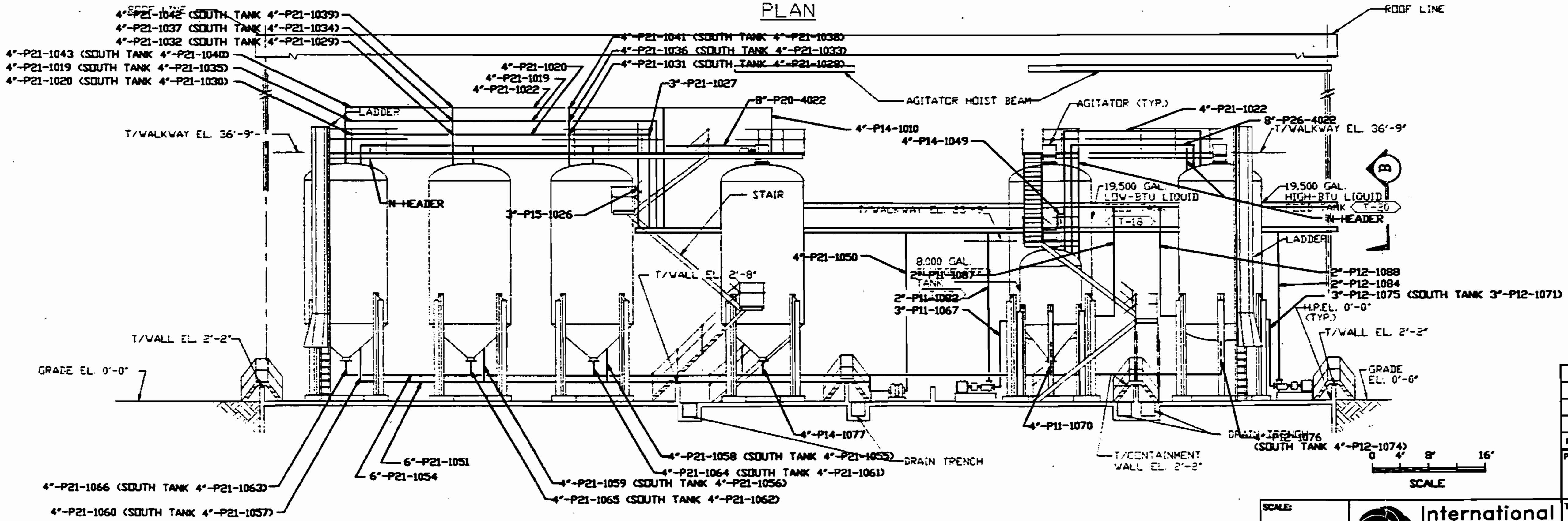

SECTION (A)

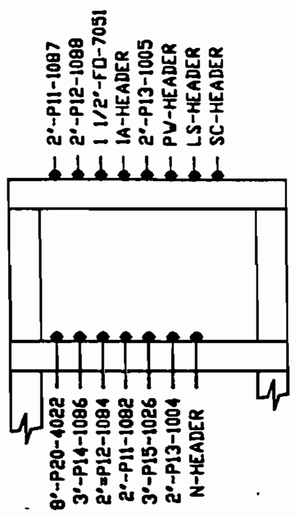

SECTION (B)

DICK M. MILLER
No. 22927
STATE OF FLORIDA

This document has been prepared and is approved by me for inclusion in environmental permit applications only. It is neither approved nor is it to be used for equipment or material procurement, construction or any other purpose.

REV.	DATE	REVISION	BY	CHKD
C	9/21/90	REVISED AND REISSUED FOR PERMIT	AMS	
B	9/22/88	GENERAL REVISION	AMS	AMS
A	9/6/88	ISSUED FOR PERMIT	BLF	AMS

PROJECT

FLORIDA FIRST
PROCESSING, INC.

TITLE

GENERAL ARRANGEMENT
ORGANIC TREATMENT
PUMPABLE WASTE STORAGE
PLAN AND SECTION
WITH PIPING

SCALE:

International
WasteEnergy
Systems

ST. LOUIS, MO.

DRAWN	DATE	APPD	DATE	DRAWING NO.	REV.
GHB	7/27/88			8813-00-P-004	C
CHKD	DATE		DATE		

FILE NAME: \8813\8813P004.DWG

C-2

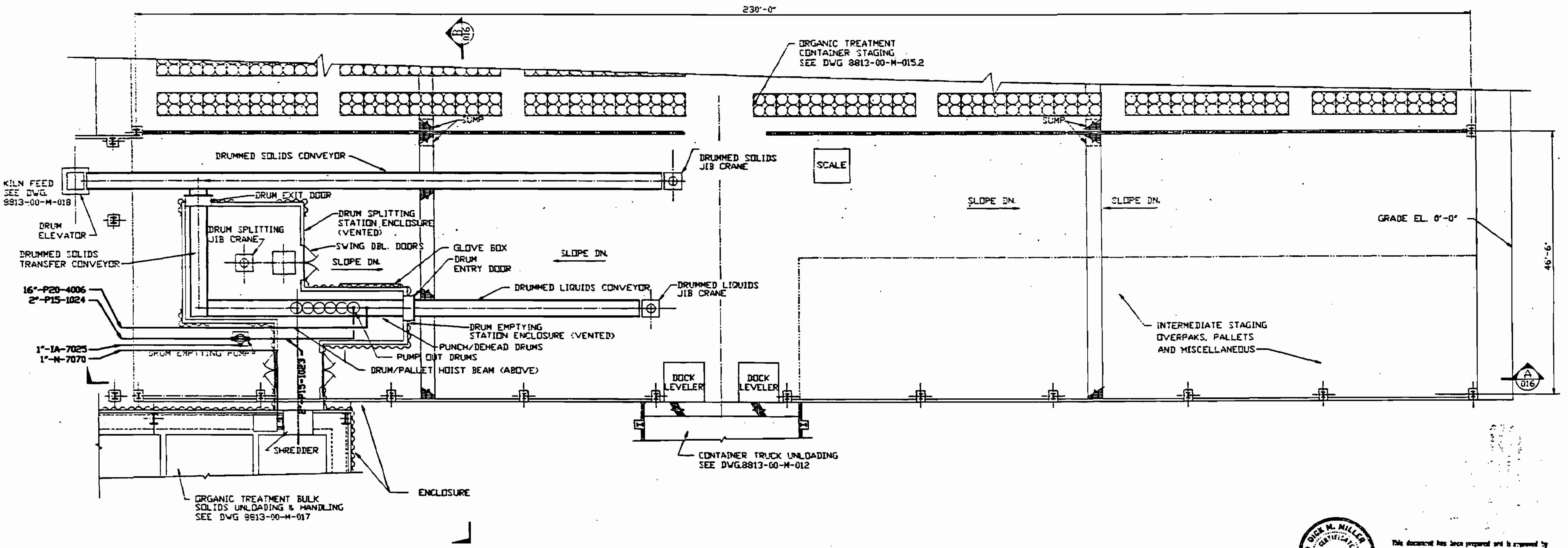

DICK M. MILLER No. 20327

This document has been prepared and is approved by me for inclusion in environmental permit applications only. It is neither approved nor is it to be used for equipment or material procurement, construction or any other purpose.

0 4' 8' 16'
SCALE

B	9/21/89	REVISED AND REISSUED FOR PERMIT	ANS	
A	08/11/89	ISSUED FOR PERMIT	BJF	ANS
REV.	DATE	REVISION	BY	CHKD

PROJECT
FLORIDA FIRST
PROCESSING, INC.

SCALE:

International
WasteEnergy
Systems
ST. LOUIS, MO.

TITLE
GENERAL ARRANGEMENT
ORGANIC TREATMENT
CONTAINER STAGING
PLAN
WITH PIPING

DRAWN GHB	DATE 7/27/89	APPD	DATE	DRAWING NO.	REV.
CHKD	DATE		DATE	8813-00-P-005	B

FILE NAME: 8813P005.DWG

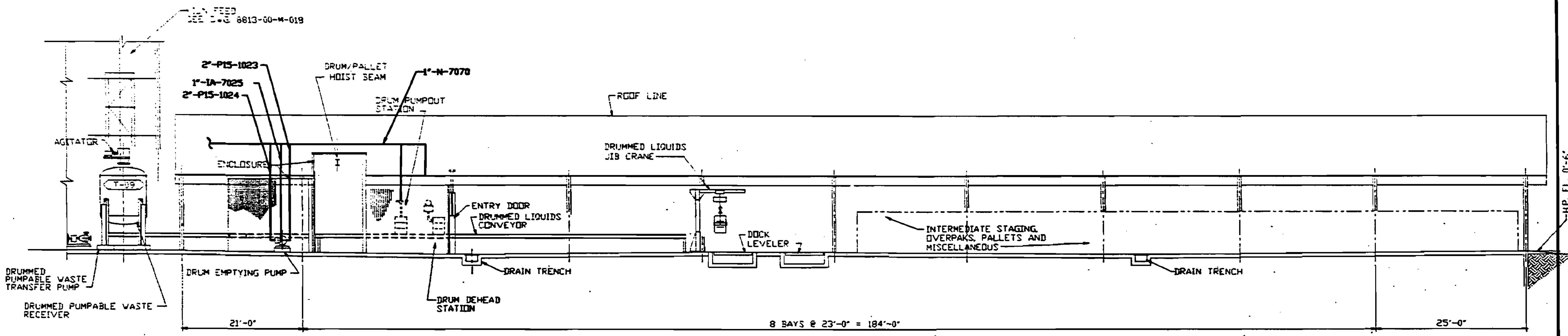

SECTION A 015.1

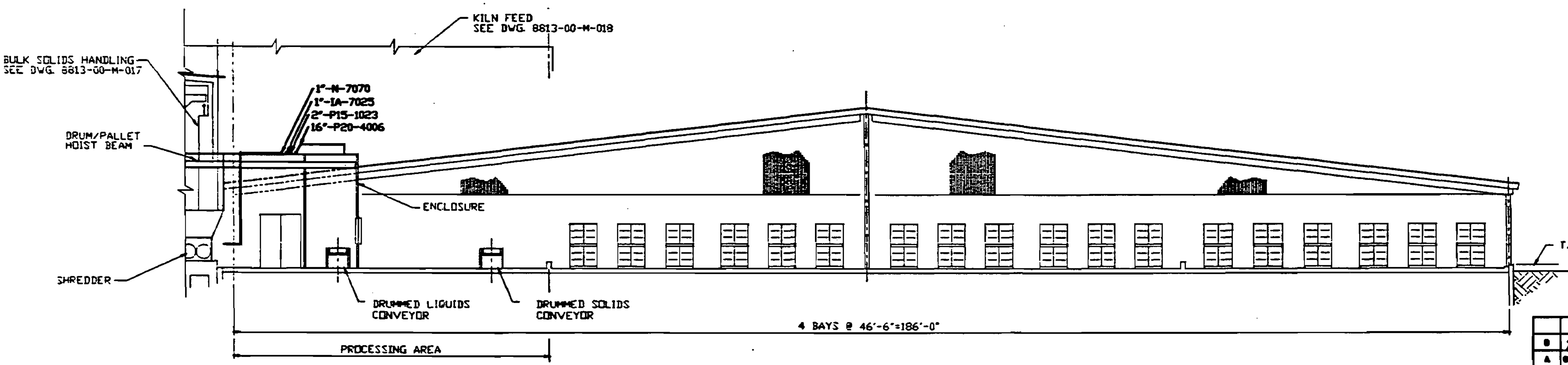

SECTION B 015.1 015.2

0 4' 8' 16'
SCALE

This document has been prepared and is approved by me for inclusion in environmental permit applications only. It is neither prepared nor is it to be used for instrument of material procurement, construction or any other purpose.

VICK M. MILLER
No. 20927

REV.	DATE	REVISION	BY	CHKD
B	7/31/90	REVISED AND REISSUED FOR PERMIT	AMS	BCI
A	08/8/89	ISSUED FOR PERMIT	BLF	AMS

PROJECT
FLORIDA FIRST
PROCESSING, INC.

SCALE:

International
WasteEnergy
Systems
ST. LOUIS, MO.

TITLE
GENERAL ARRANGEMENT-ORGANIC TREATMENT
CONTAINER STAGING
SECTIONS
WITH PIPING

DRAWN	DATE	APPD	DATE	DRAWING NO.	REV.
BLF	8/10/89			8813-00-P-006	B
CHKD	DATE		DATE		

FILE NAME: \8813\8813P006.DWG

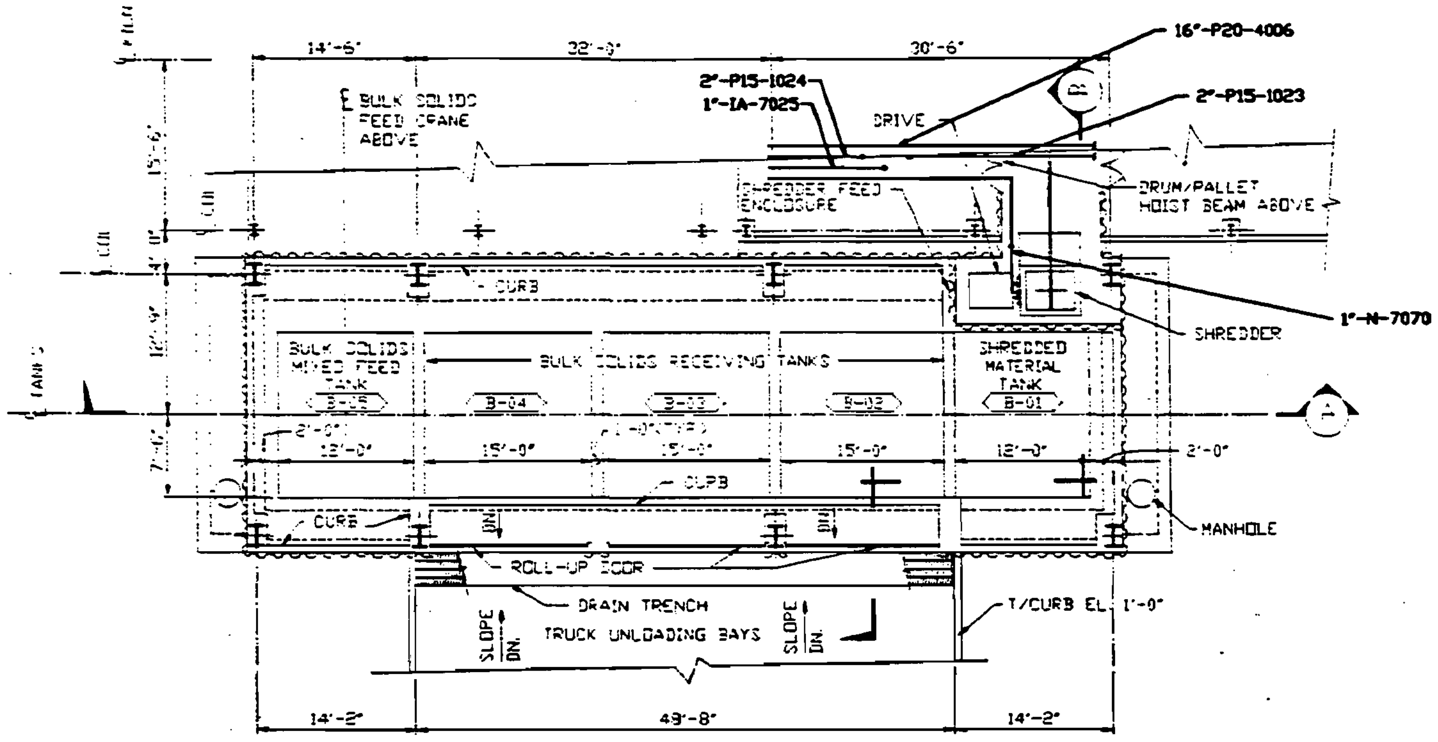

PLAN ABOVE TANKS

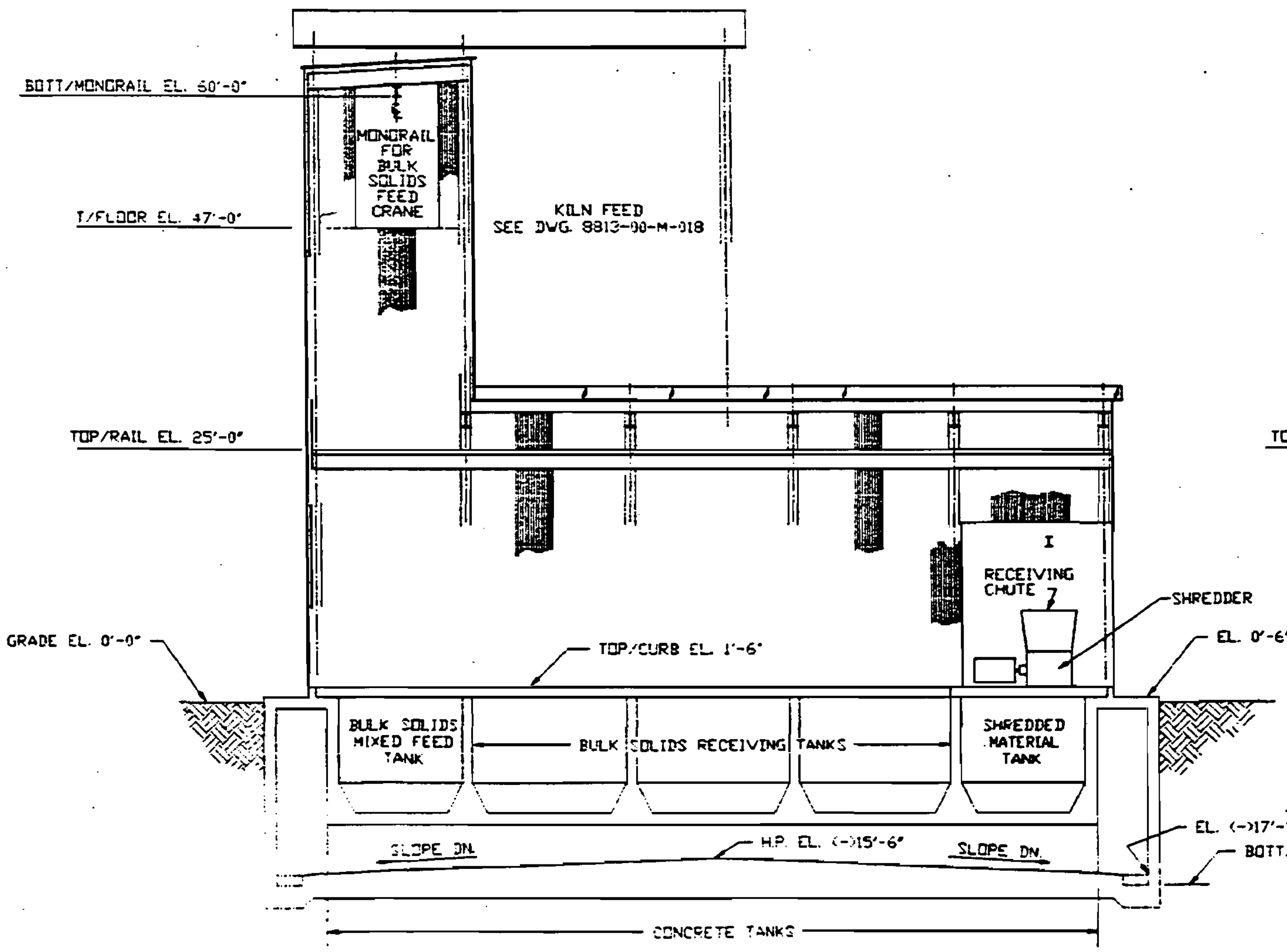

SECTION (A)

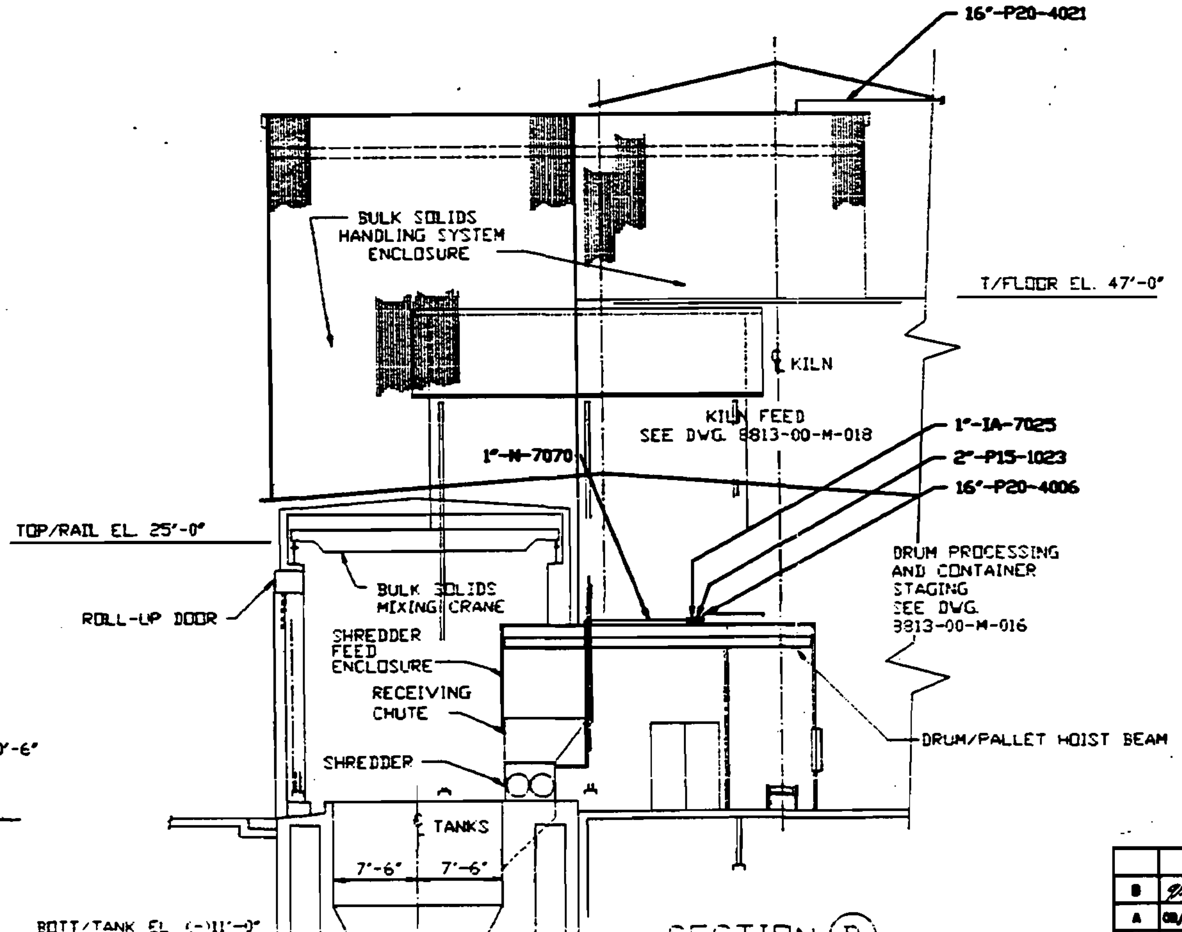

SECTION (B)

0 4' 8' 16'

SCALE

No. 22327

This document has been prepared and is approved by me for inclusion in environmental permit applications only. It is neither approved nor is it to be used for equipment or material procurement, construction or any other purpose.

B	9/2/98	REVISED AND REISSUED FOR PERMIT	AMS	
A	08/8/98	ISSUED FOR PERMIT	BLF	AMS
REV.	DATE	REVISION	BY	CHKD

PROJECT

FLORIDA FIRST
PROCESSING, INC.

SCALE:

International
WasteEnergy
Systems

ST. LOUIS, MO.

TITLE

GENERAL ARRANGEMENT
ORGANIC TREATMENT
BULK SOLIDS UNLOADING & HANDLING
PLAN AND SECTIONS
WITH PIPING

DRAWN BLF	DATE 1/05/98	APPD	DATE	DRAWING NO.	REV.
CHKD	DATE		DATE	8813-00-P-007	B

FILE NAME: \8813\8813P007.DWG

B-1

BEST AVAILABLE COPY

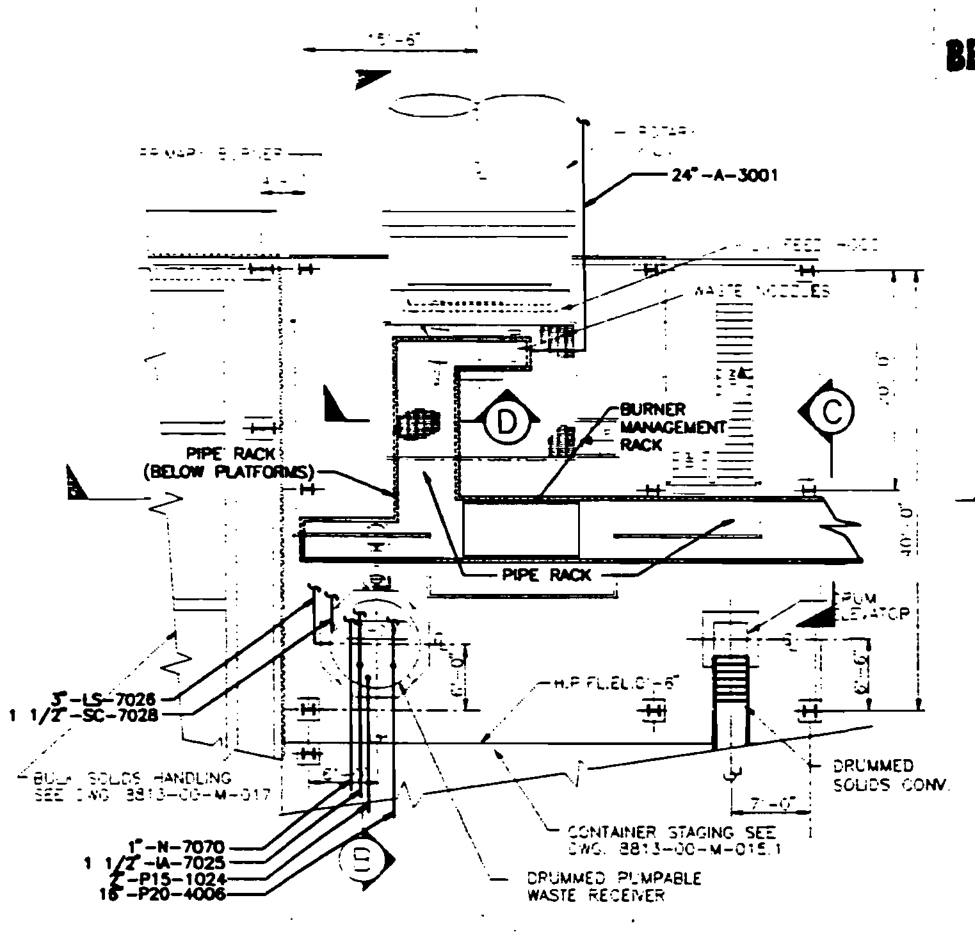

PLAN ABOVE PLATFORM EL. 19'-0"

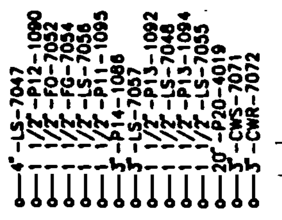

SECTION (D)

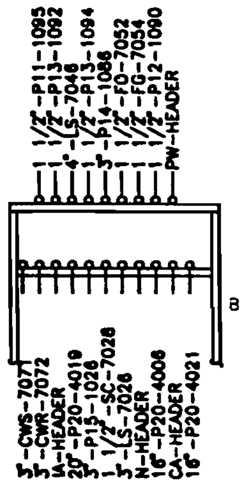

SECTION (C)

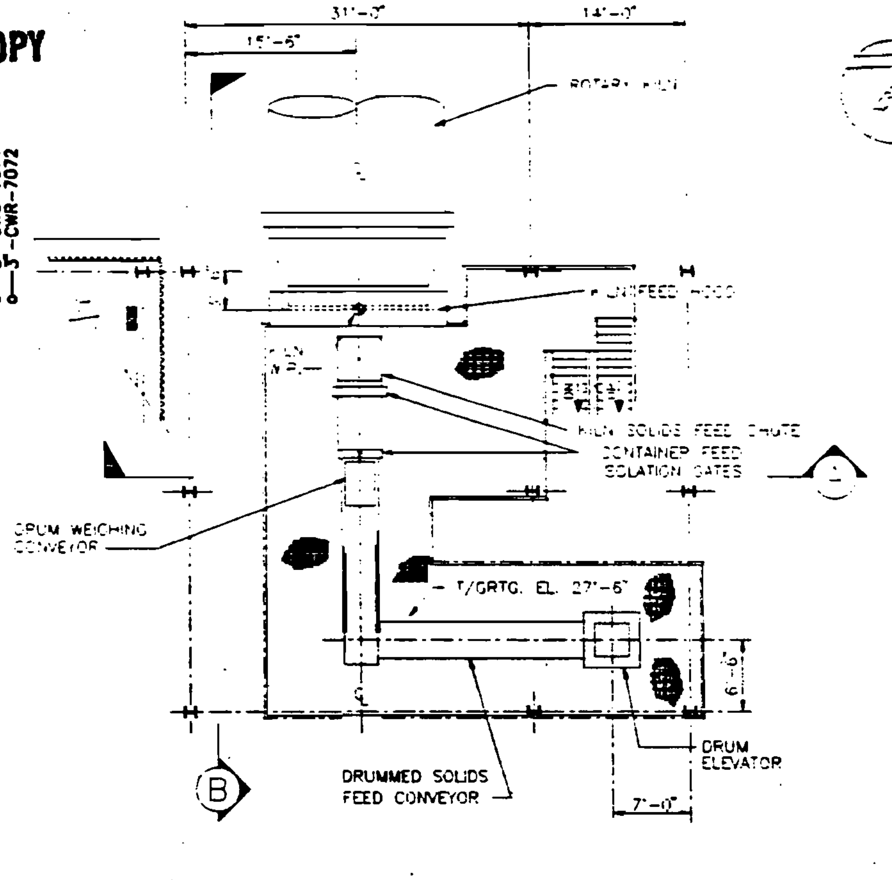

PLAN ABOVE FL. EL. 27'-6"

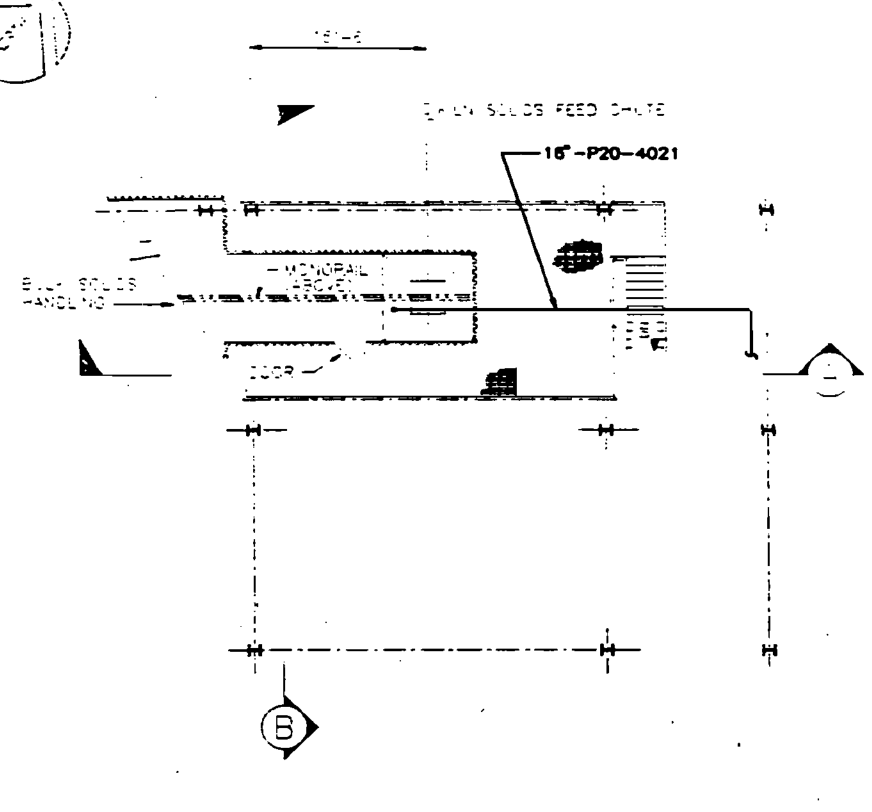

PLAN ABOVE FL. EL. 47'-0"

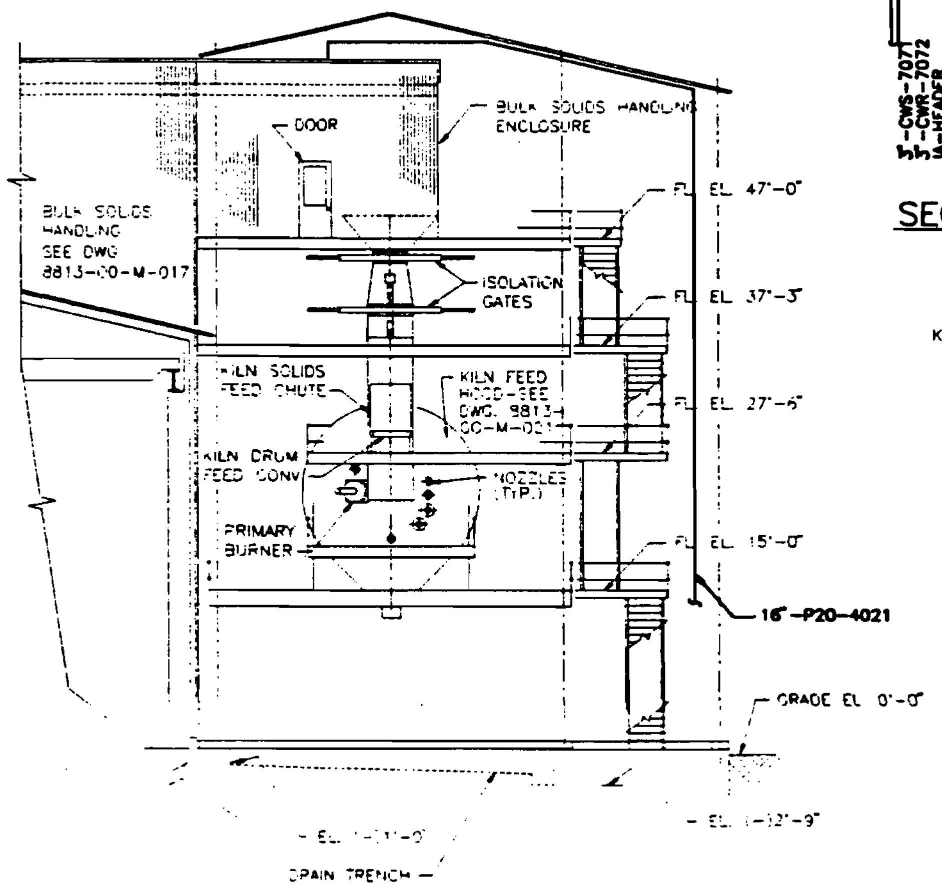

SECTION (A)

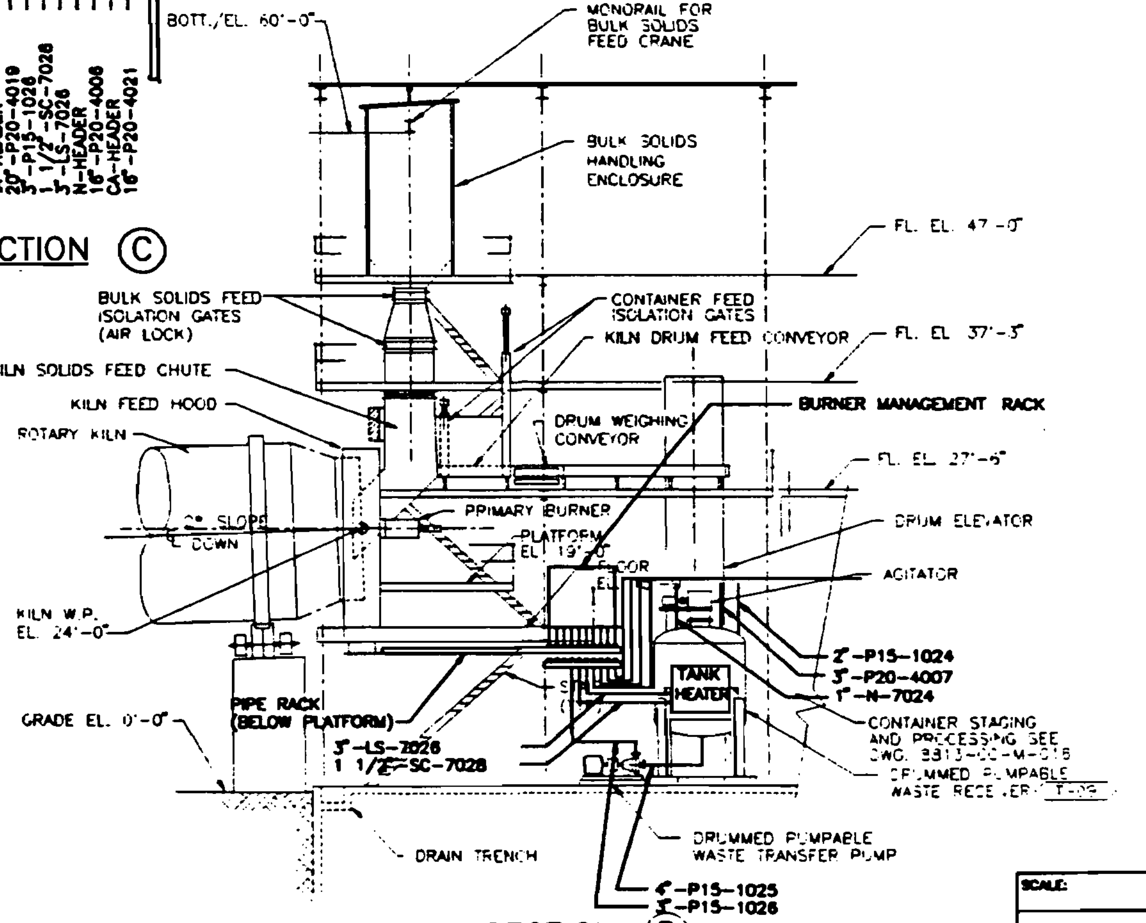

SECTION (B)

0 4' 8' 16'
SCALE

DICK H. MILLER
No. 27927

This document has been prepared and is approved by me for inclusion in environmental permit applications only. It is neither approved nor is it to be used for equipment or material procurement, construction or any other purpose.

REV.	DATE	REVISION	BY	CHKD
B	9/21/89	REVISED AND REISSUED FOR PERMIT	AHS	
A	08/08/88	ISSUED FOR PERMIT	SLF	AHS

SCALE:

International WasteEnergy Systems
ST. LOUIS, MO.

PROJECT
FLORIDA FIRST PROCESSING, INC.

TITLE
GENERAL ARRANGEMENT
ORGANIC TREATMENT
KILN FEED
PLANS AND SECTIONS
WITH PIPING

DRAWN	DATE	APPD	DATE	DRAWING NO.	REV.
GB	7/27/88			8813-00-P008	B
CHKD	DATE		DATE		

FILE NAME: 8813P008.DWG

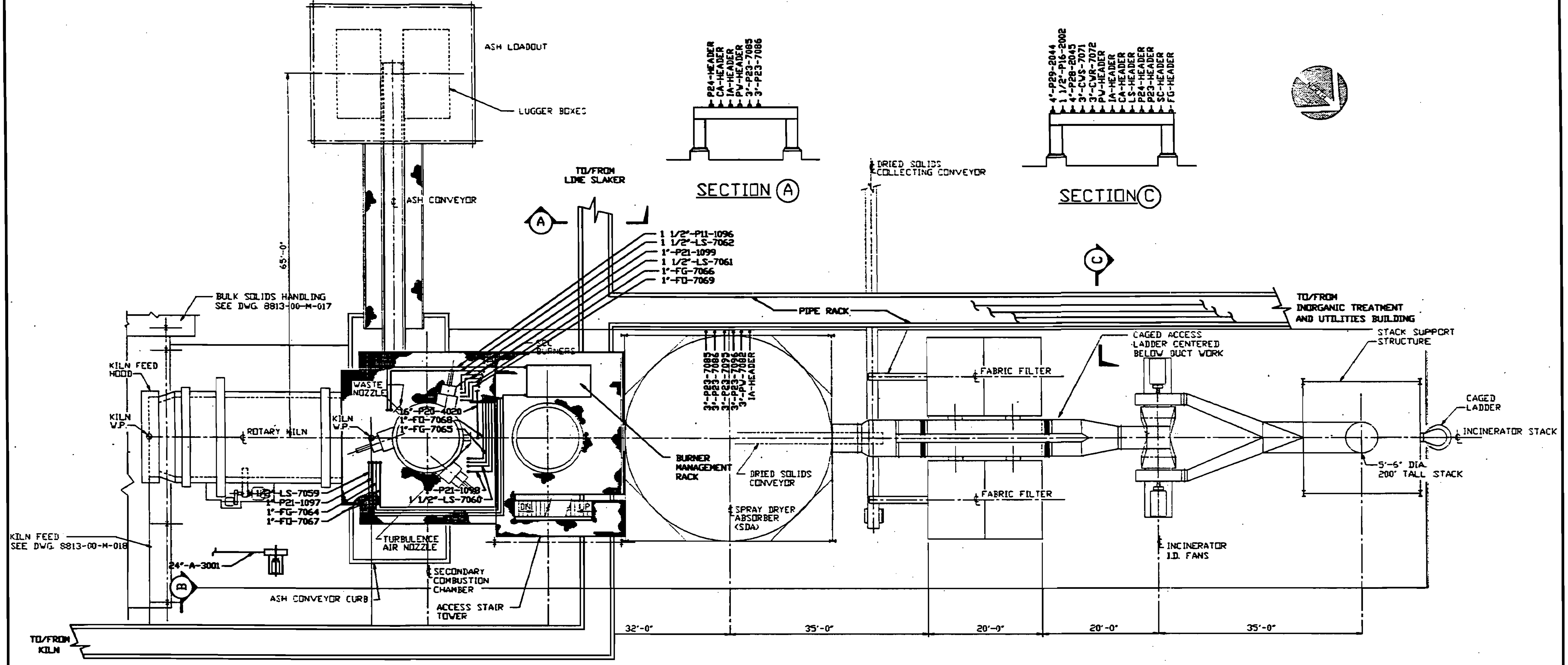

PLAN

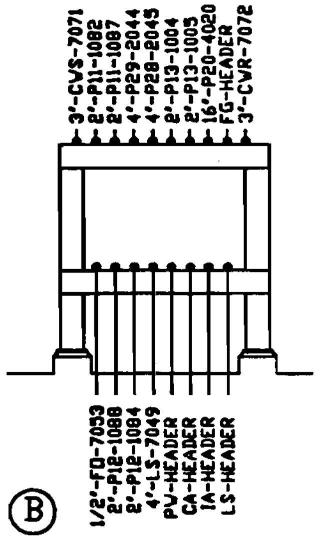

SECTION B

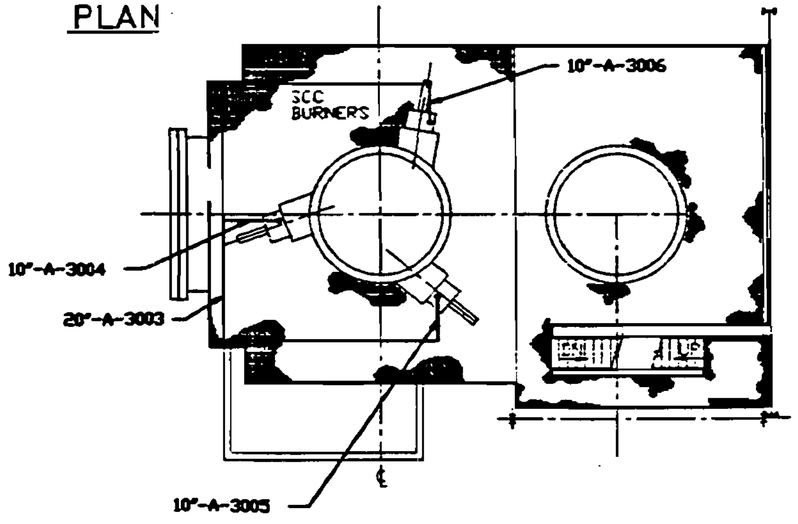

PARTIAL PLAN

This document has been prepared and is approved by me for inclusion in environmental permit applications only. It is neither approved nor is it to be used for equipment or material procurement, construction or any other purpose.

DICK M. MILLER
No. 20827

0 4' 8' 16'
SCALE

B	11/4/90	REVISED AND REISSUED FOR PERMIT	AMS	ACI
A	08/08/88	ISSUED FOR PERMIT	BLF	AMS
REV.	DATE	REVISION	BY	CHKD

PROJECT
FLORIDA FIRST
PROCESSING, INC.

SCALE:

International
WasteEnergy
Systems
ST. LOUIS, MO.

TITLE
GENERAL ARRANGEMENT
ORGANIC TREATMENT
KILN AND GAS CLEANING
PLAN
WITH PIPING

DRAWN	DATE	APPD	DATE	DRAWING NO.	REV.
GB	7/27/88			8813-00-P-009	B
CHKD	DATE		DATE		

FILE NAME: \8813\8813P009.DWG

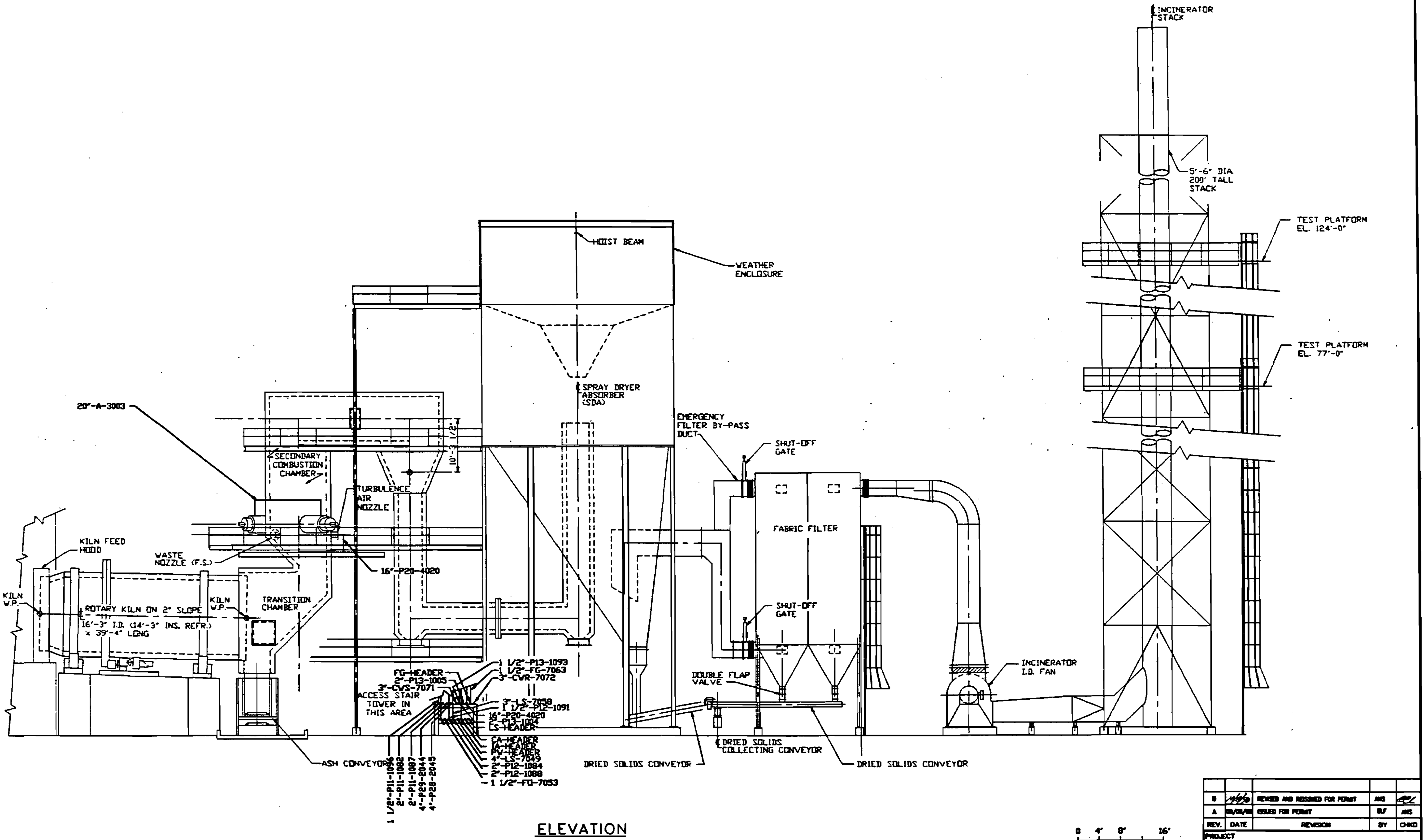

ELEVATION

0 4' 8' 16'
SCALE

This document has been prepared and is approved by me for inclusion in environmental permit applications only. It is neither approved nor is it to be used for equipment or material procurement, construction or any other purpose.

DICK M. MILLER
No. 20027
STATE OF FLORIDA

SCALE:

International
WasteEnergy
Systems
ST. LOUIS, MO.

REV.	DATE	REVISION	BY	CHKD
B	[illegible]	REVISED AND REISSUED FOR PERMIT	AMS	[illegible]
A	[illegible]	ISSUED FOR PERMIT	BLF	AMS

PROJECT
FLORIDA FIRST
PROCESSING, INC.

TITLE
GENERAL ARRANGEMENT
ORGANIC TREATMENT
KILN AND GAS CLEANING
ELEVATION
WITH PIPING

DRAWN	DATE	APPD	DATE	DRAWING NO.	REV.
BLF	[illegible]			8813-00-P-010	B
CHKD	DATE		DATE		

FILE NAME: \8813\8813P010.DWG

B-2

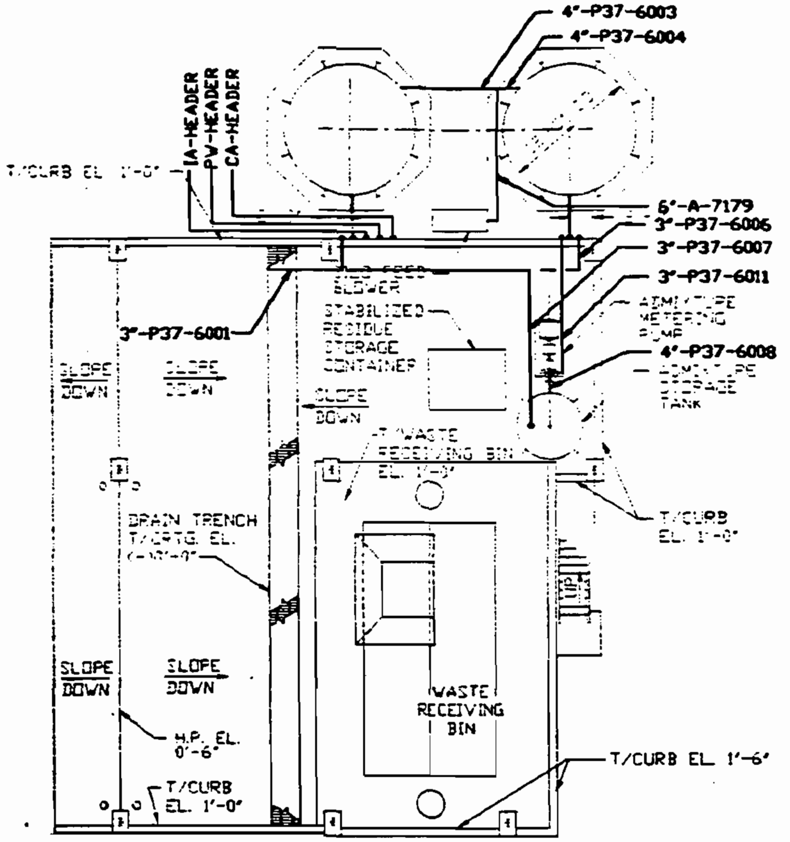

PLAN ABOVE GRADE

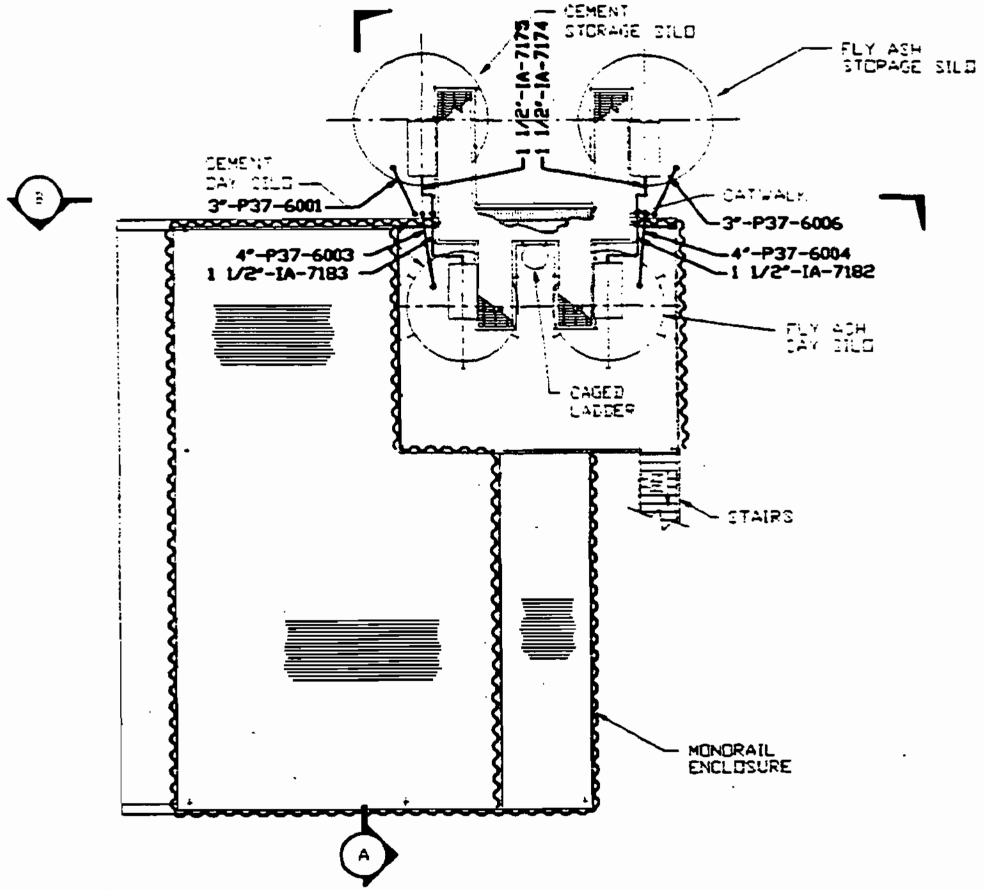

PLAN ABOVE EL. 36'-0"

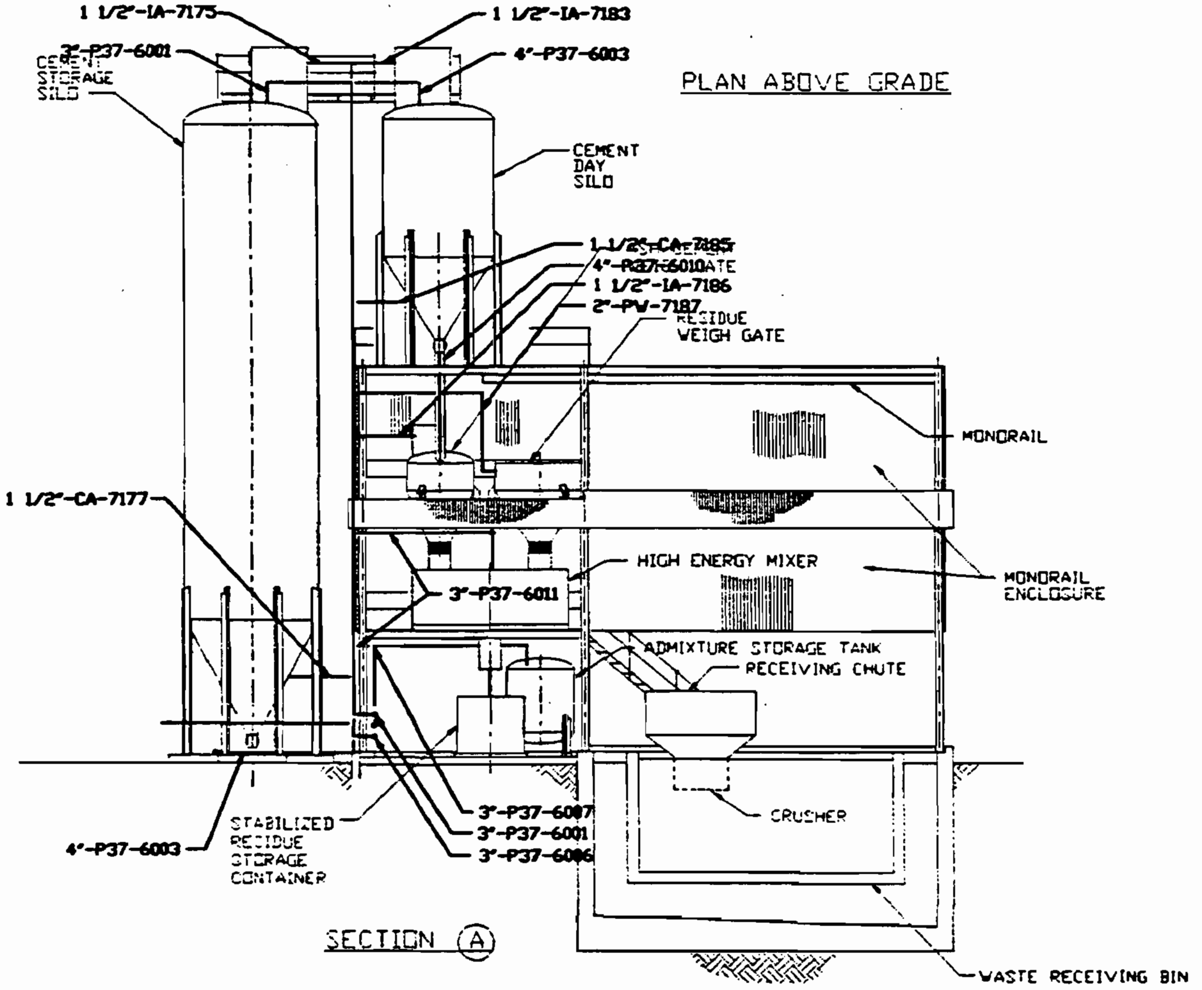

SECTION (A)

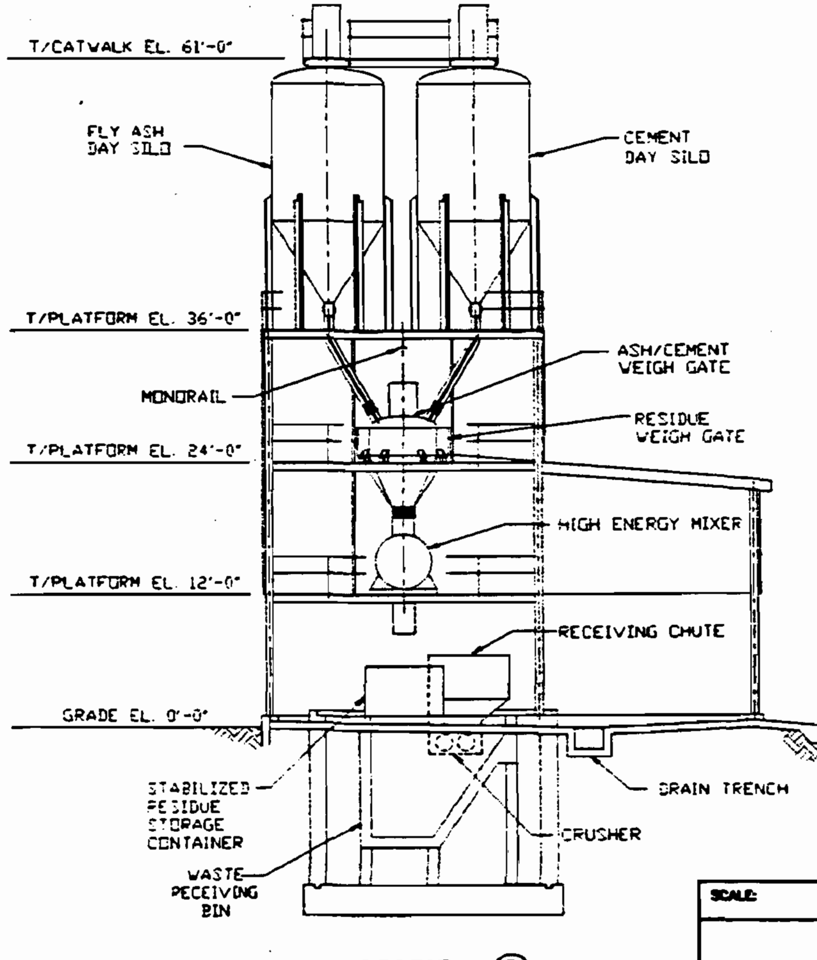

SECTION (B)

0 4' 8' 16'
SCALE

DICK M. MILLER
No.
STATE OF FLORIDA

This document has been reviewed and is [illegible]

B	9/2/88	REVISED AND REISSUED FOR PERMIT	AMS	RCJ
A	08/8/88	ISSUED FOR PERMIT	BLF	AMS
REV.	DATE	REVISION	BY	CHKD

PROJECT
FLORIDA FIRST
PROCESSING, INC.

SCALE:

International
WasteEnergy
Systems
ST. LOUIS, MO.

TITLE
GENERAL ARRANGEMENT
STABILIZATION
PLANS AND SECTIONS
WITH PIPING

DRAWN	DATE	APP'D	DATE	DRAWING NO.	REV.
GB	7/27/88				
CHKD	DATE		DATE	8813-00-P-011	B

Best Available Copy

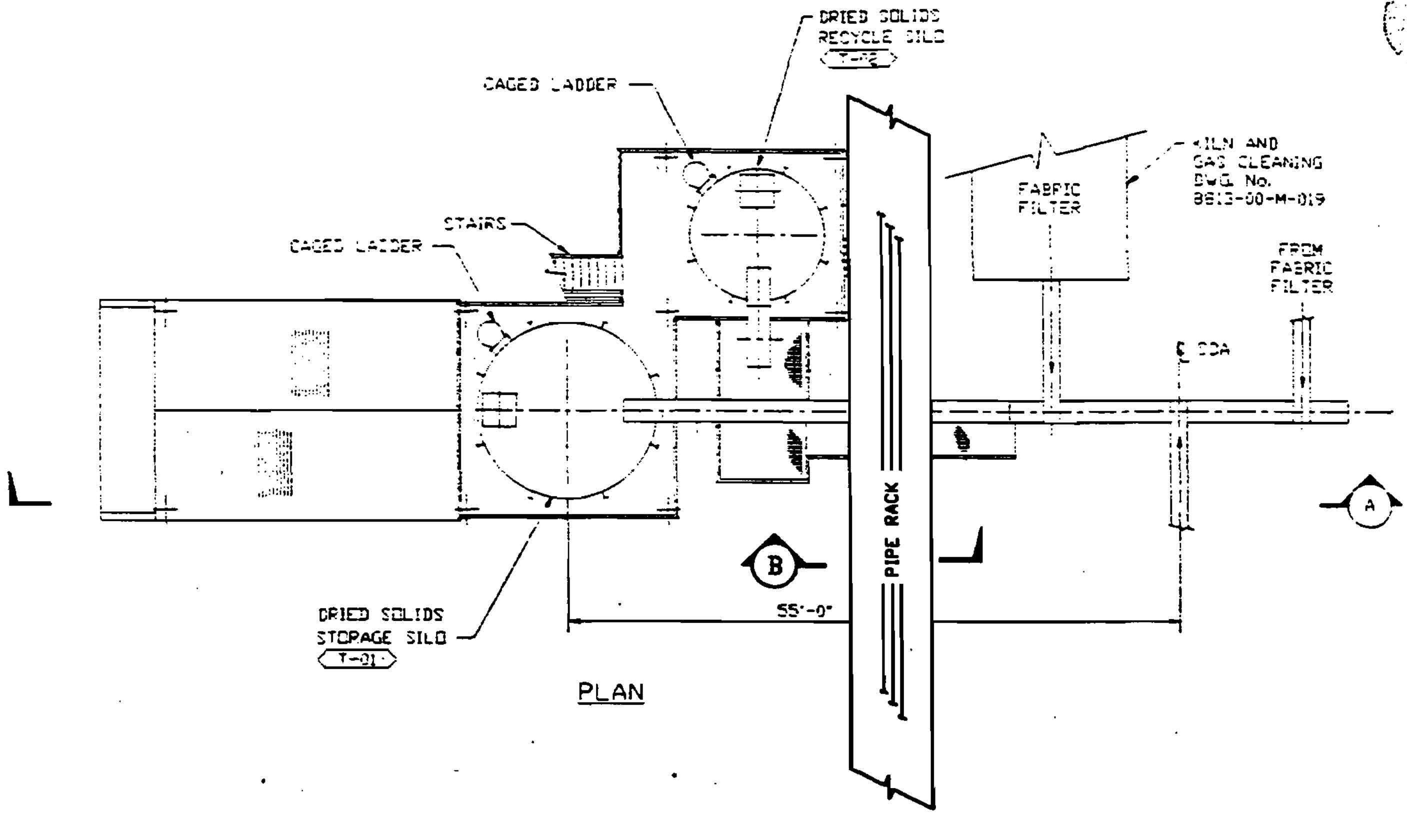

PLAN

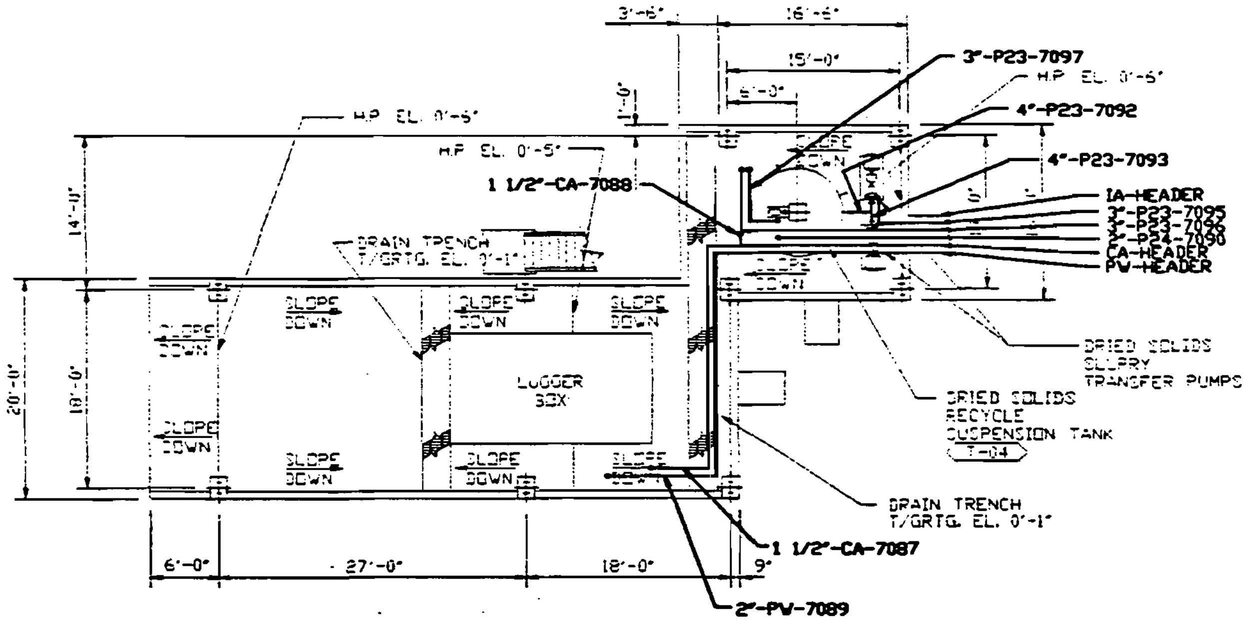

PLAN ABOVE GRADE

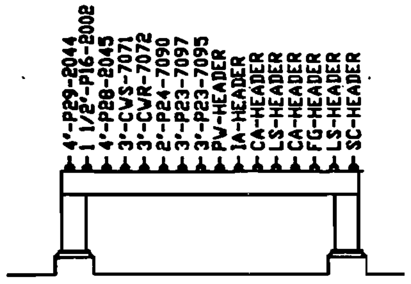

SECTION Ⓑ

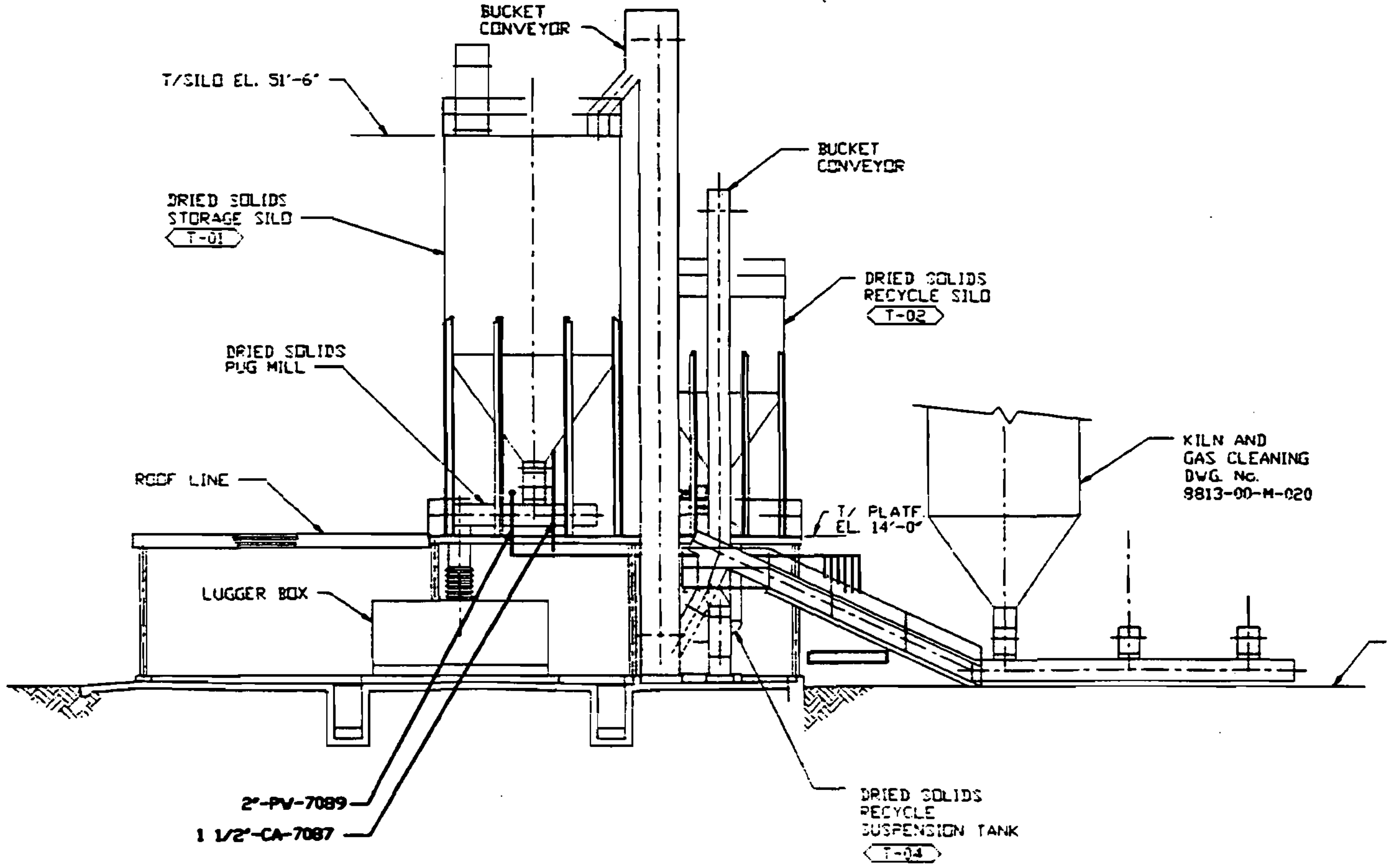

SECTION Ⓐ

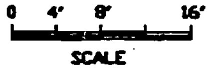

SCALE

DICK M. MILLER
No. 20277

This document has been prepared and is approved by me for inclusion in environmental permit applications only. It is neither approved nor is it to be used for equipment or material procurement, construction or any other purpose.

REV.	DATE	REVISION	BY	CHKD
B	9/21/98	REVISED AND REISSUED FOR PERMIT	AMS	BDJ
A	08/18/98	ISSUED FOR PERMIT	B.F.	AMS

PROJECT
FLORIDA FIRST
PROCESSING, INC.

SCALE:

International
WasteEnergy
Systems
ST. LOUIS, MO.

TITLE
GENERAL ARRANGEMENT
ORGANIC TREATMENT
DRIED SOLIDS SYSTEM
PLANS AND SECTIONS
WITH PIPING

DRAWN	DATE	APPD	DATE	DRAWING NO.	REV.
B.F.	8/07/98			8813-00-P-012	B
CHKD	DATE		DATE		

FILE NAME: \8813\8813P012.DWG

BEST AVAILABLE COPY

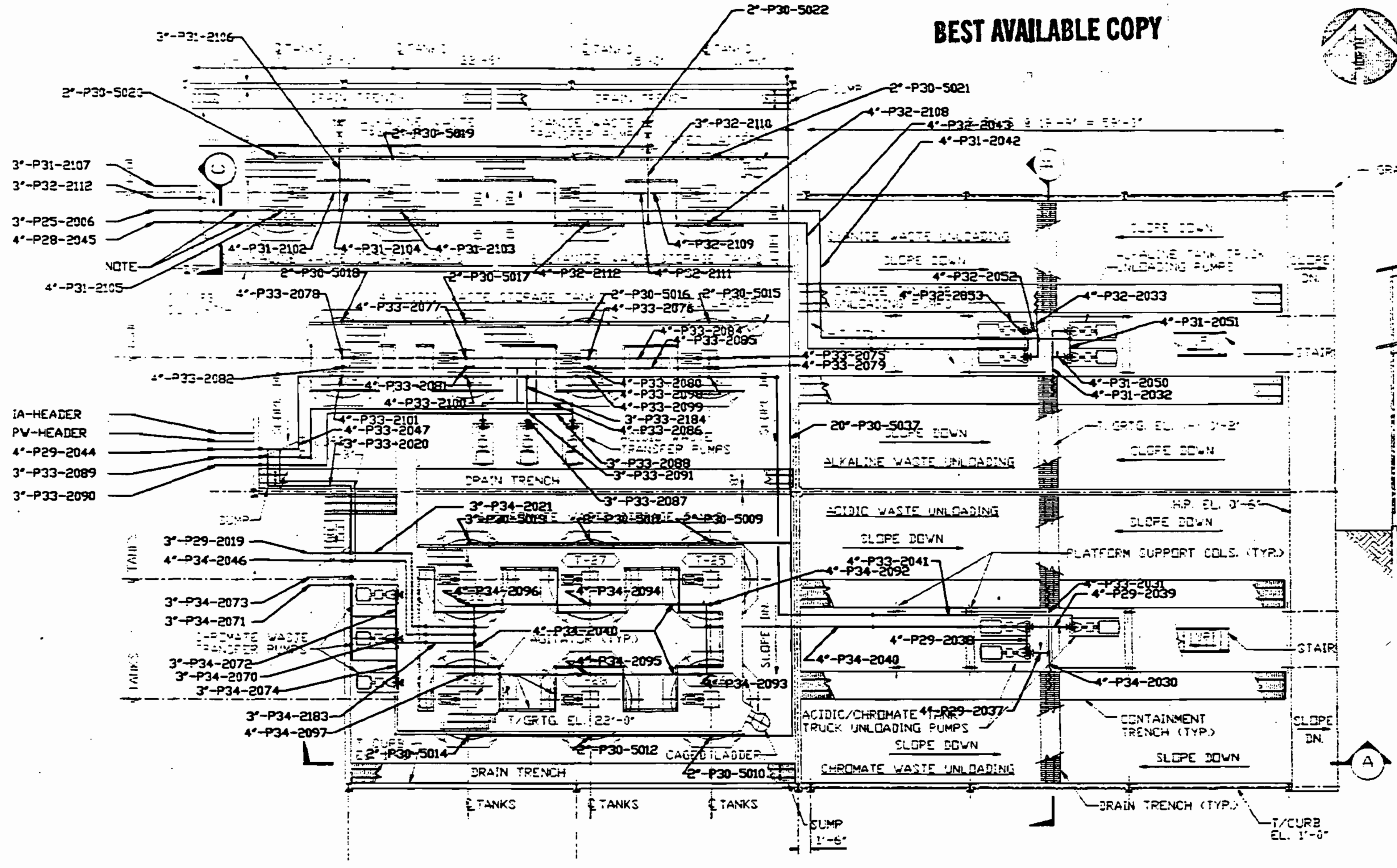

PLAN

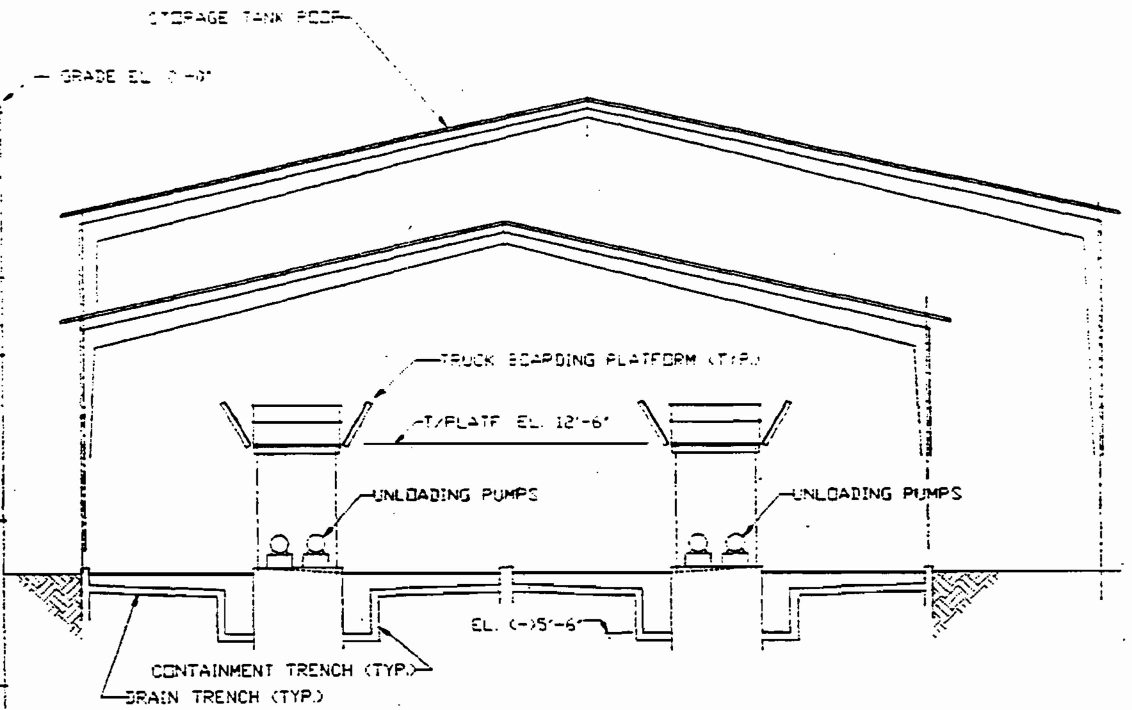

SECTION B

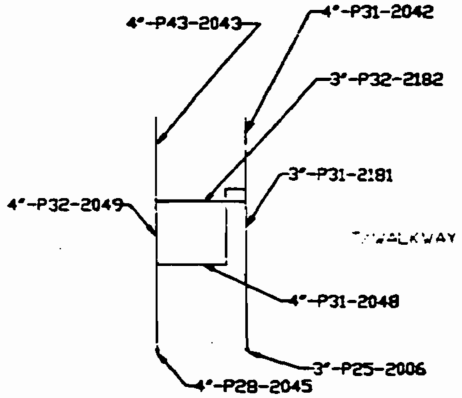

SECTION C

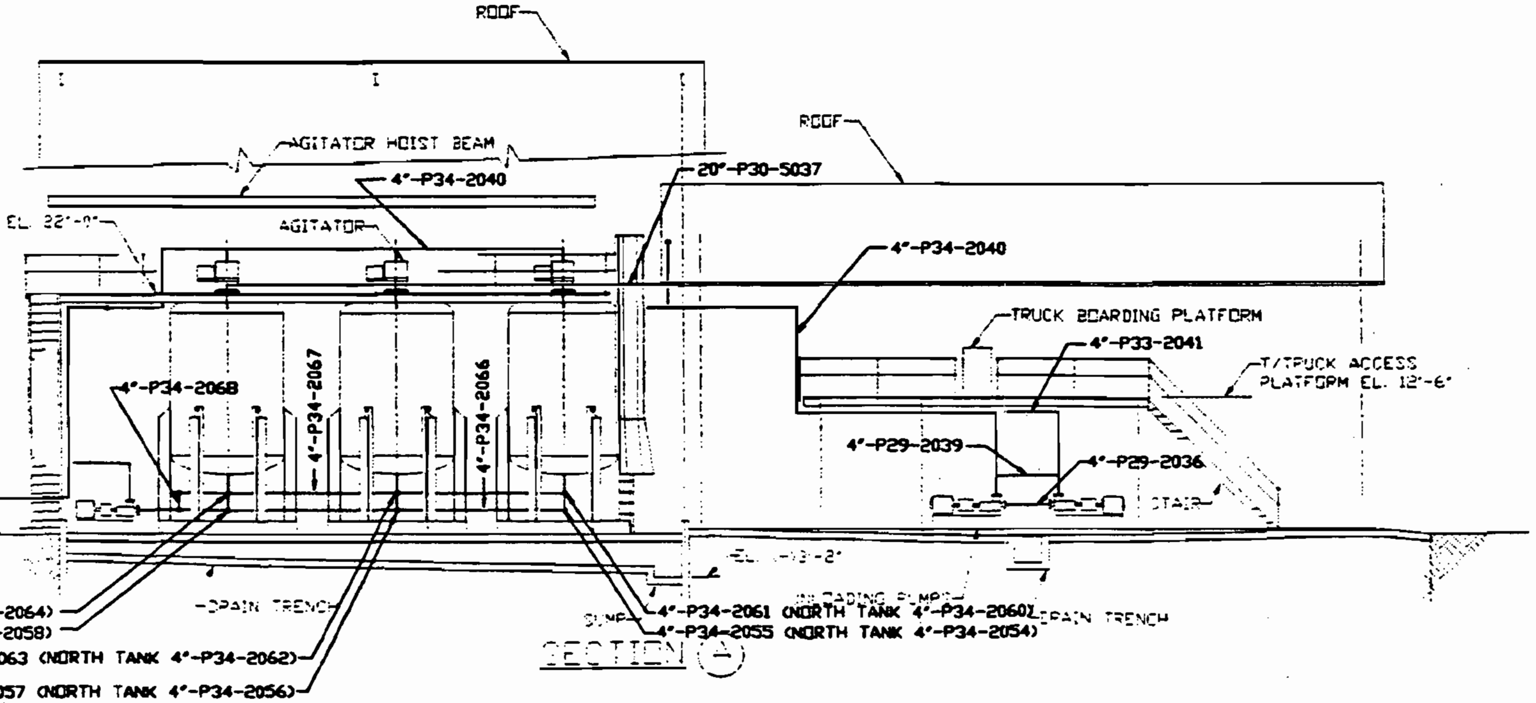

SECTION A

NOTE:
ALKALINE PIPE WILL HAVE
DRIP PAN ABOVE CYANIDE
STORAGE AREA TO DIRECT
SPILLS TO THE ALKALINE
STORAGE AREA.
CYANIDE PIPE WILL HAVE
DRIP PAN ABOVE ALKALINE
STORAGE AREA TO DIRECT
SPILLS TO THE CYANIDE
STORAGE AREA.

DICK M. MILLER
No. 22927

This document has been prepared and is approved by me for inclusion in environmental permit applications only. It is neither approved nor is it to be used for equipment or material procurement, construction or any other purpose.

0 4' 8' 16'
SCALE

REV.	DATE	REVISION	BY	CHKD
B	9/21/89	REVISED AND REISSUED FOR PERMIT	AMS	
A	08/8/89	ISSUED FOR PERMIT	SLF	AMS

PROJECT
FLORIDA FIRST
PROCESSING, INC.

SCALE:

International
WasteEnergy
Systems
ST. LOUIS, MO.

TITLE
GENERAL ARRANGEMENT
INORGANIC TREATMENT
PUMPABLE WASTE UNLOADING & STORAGE
PLAN AND SECTIONS
WITH PIPING

DRAWN	DATE	APPD	DATE	DRAWING NO.	REV.
GMB	7/27/89			8813-00-P-013	B
CHKD	DATE		DATE		

FILE NAME: \8813\8813P013.DWG

BEST AVAILABLE COPY

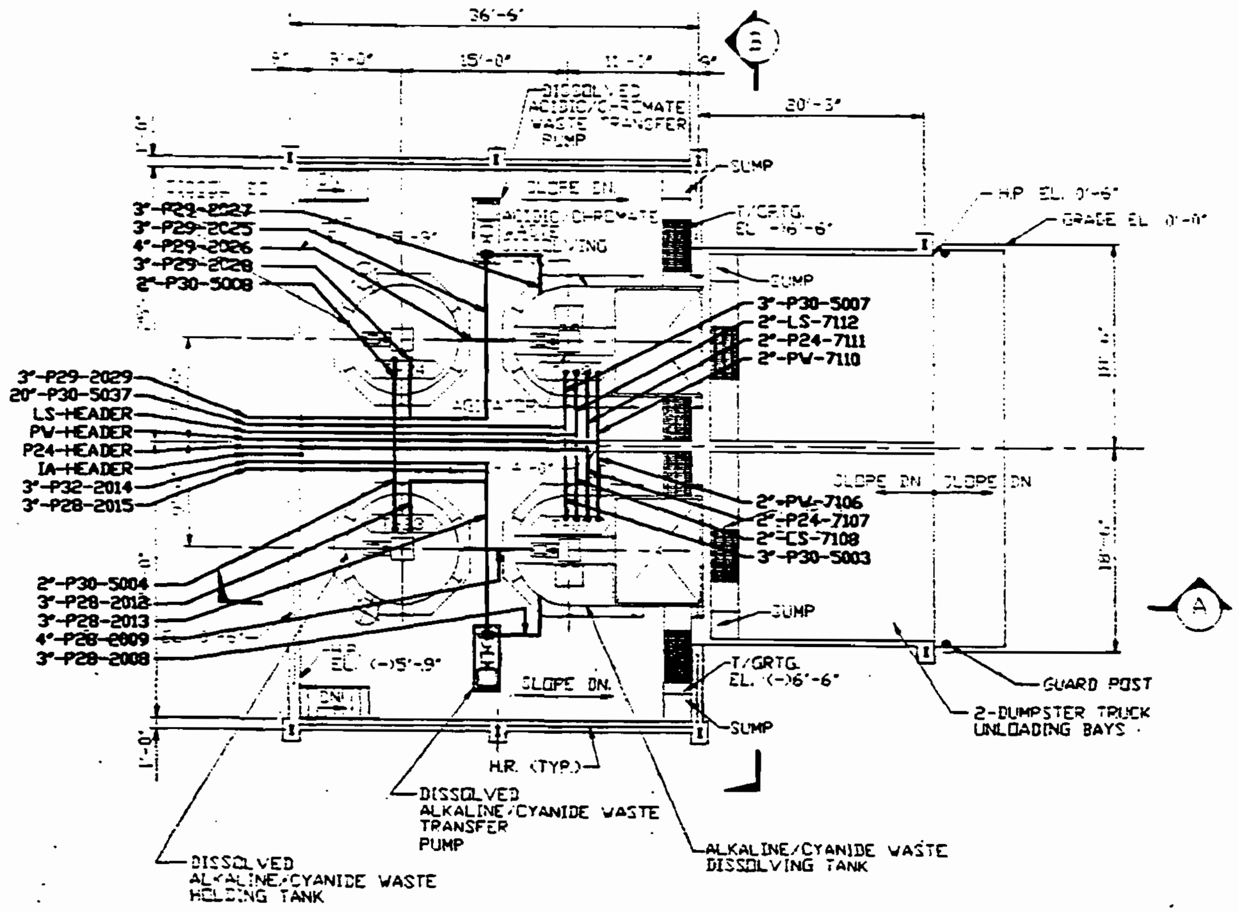

PLAN

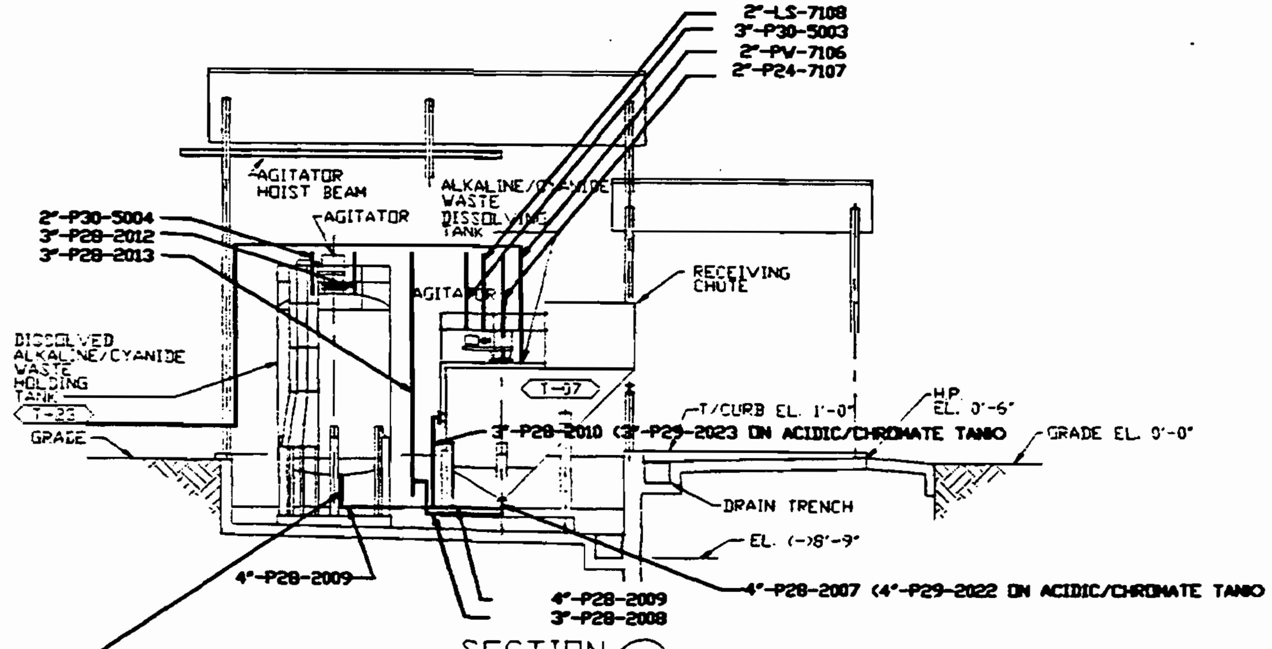

SECTION (A)

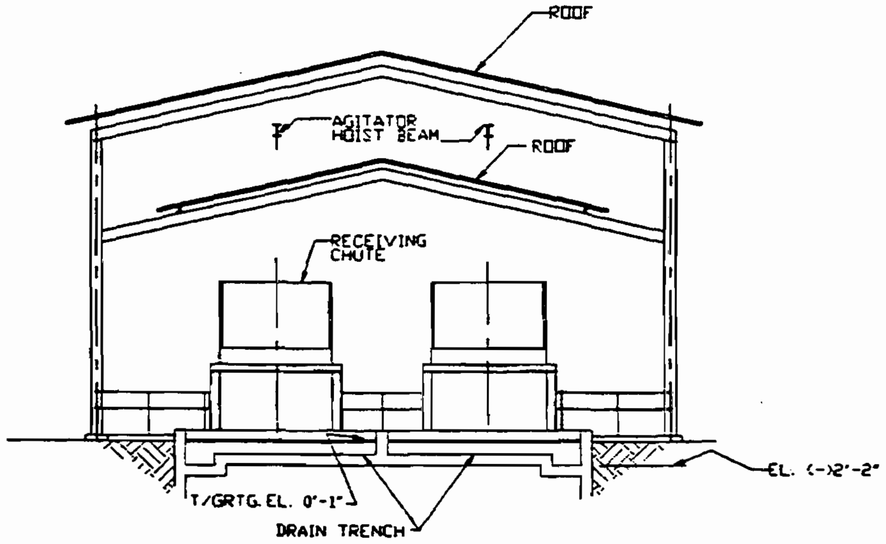

SECTION (B)

0 4' 8' 16'

SCALE

DICK M. MILLER

This document has been prepared and is approved by me for inclusion in environmental permit applications only. It is neither intended nor is it to be used for shipment or material procurement, construction or any other purpose.

REV.	DATE	REVISION	BY	CHKD
B	7/3/[illegible]	REVISED AND REISSUED FOR PERMIT	AHS	[illegible]
A	[illegible]	ISSUED FOR PERMIT	RLF	AHS

PROJECT

FLORIDA FIRST
PROCESSING, INC.

SCALE:

International
WasteEnergy
Systems

ST. LOUIS, MO.

TITLE

GENERAL ARRANGEMENT
INORGANIC TREATMENT
NON-PUMPABLE WASTE HANDLING
PLAN AND SECTIONS
WITH PIPING

DRAWN	DATE	APPD	DATE	DRAWING NO.	REV.
[illegible]	7/27/[illegible]			8813-00-P-014	B
CHKD	DATE		DATE		

FILE NAME: [illegible]

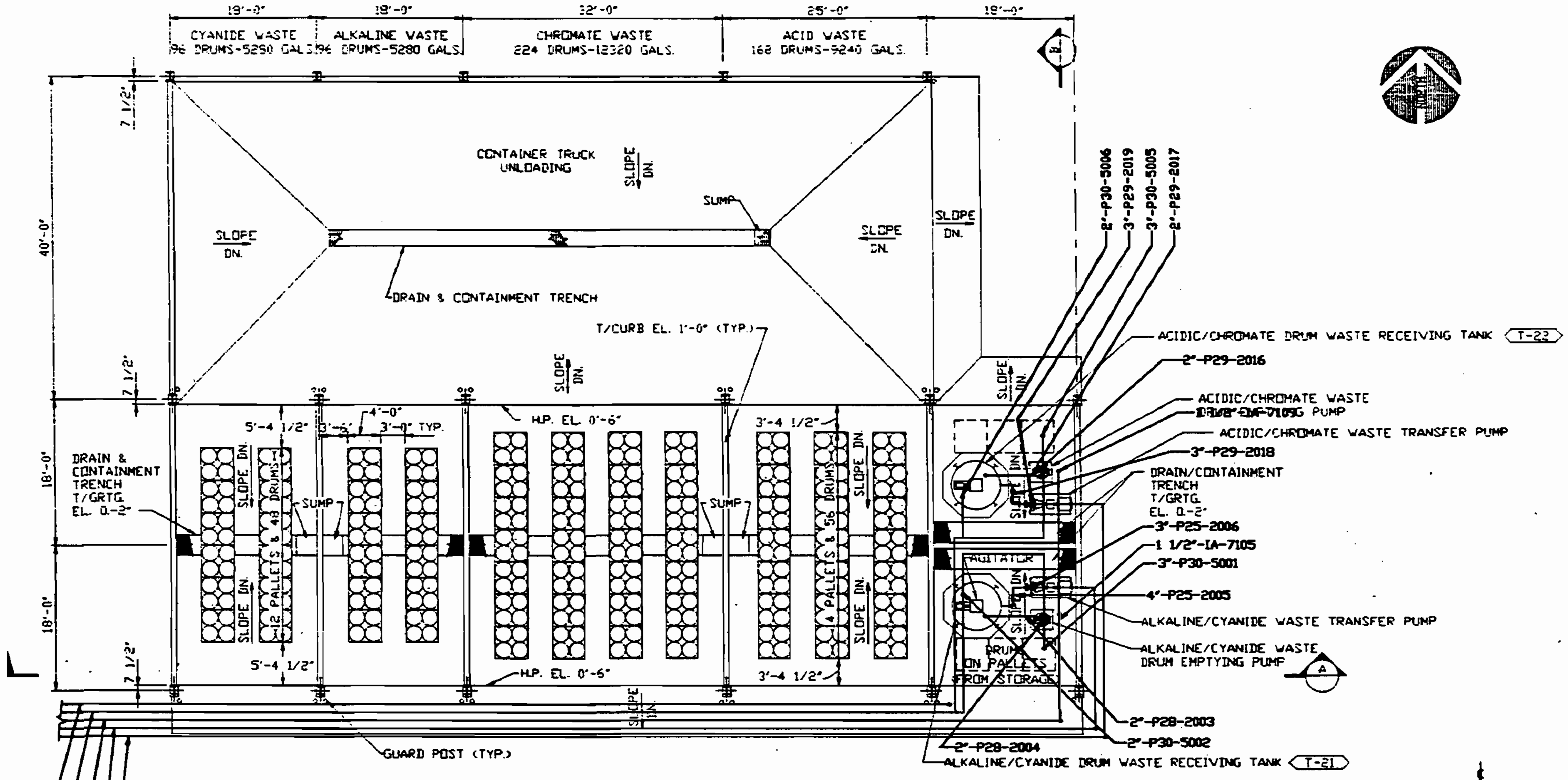

PLAN

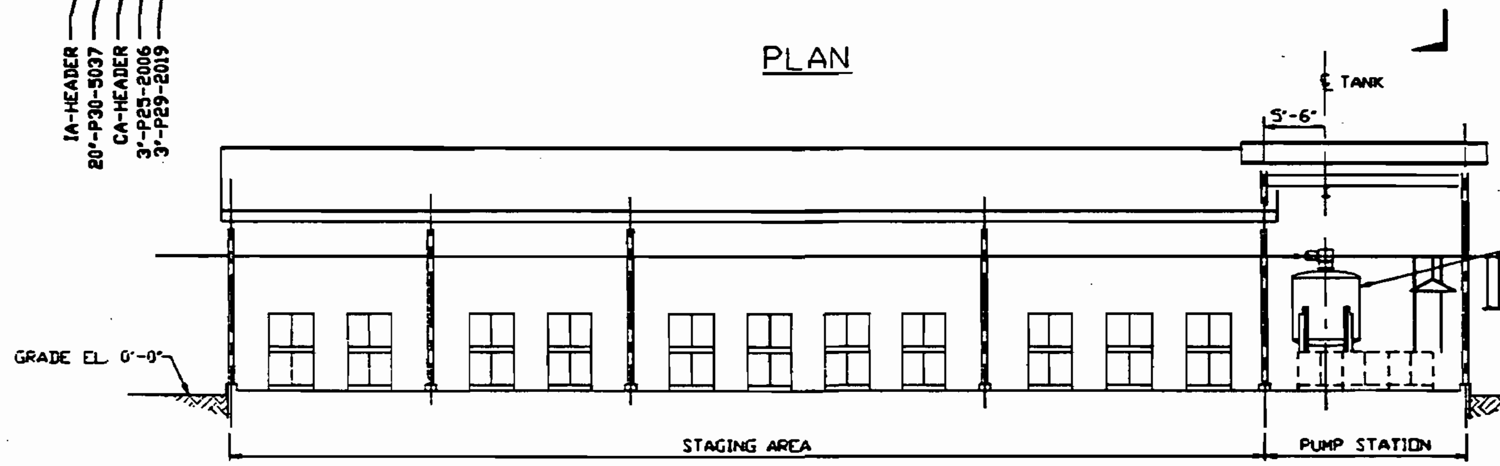

SECTION (A)

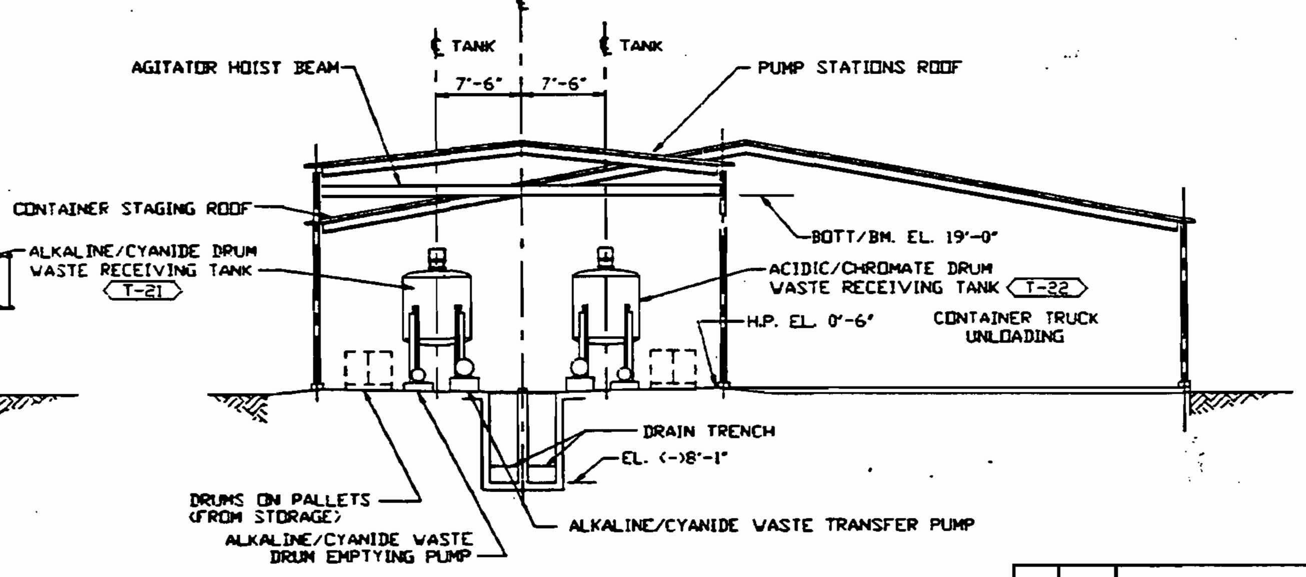

SECTION (B)

This document has been prepared and is approved by me for inclusion in environmental permit applications only. It is neither approved nor is it to be used for approval or material procurement, construction or any other purpose.

DICK M. MILLER
No. 20927

REV.	DATE	REVISION	BY	CHKD
B		REVISED AND REISSUED FOR PERMIT	AMS	
A	08/8/88	ISSUED FOR PERMIT	BLF	AMS

PROJECT
FLORIDA FIRST PROCESSING, INC.

SCALE:

International WasteEnergy Systems
ST. LOUIS, MO.

TITLE
GENERAL ARRANGEMENT—INORGANIC TREATMENT
CONTAINER UNLOADING, STAGING AND
PUMP STATION
PLANS AND SECTIONS WITH PIPING

DRAWN	DATE	APPD	DATE	DRAWING NO.	REV.
BLF	8/08/88			8813-00-P-015	B
CHKD	DATE		DATE		

FILE NAME: \8813\8813P015

BEST AVAILABLE COPY

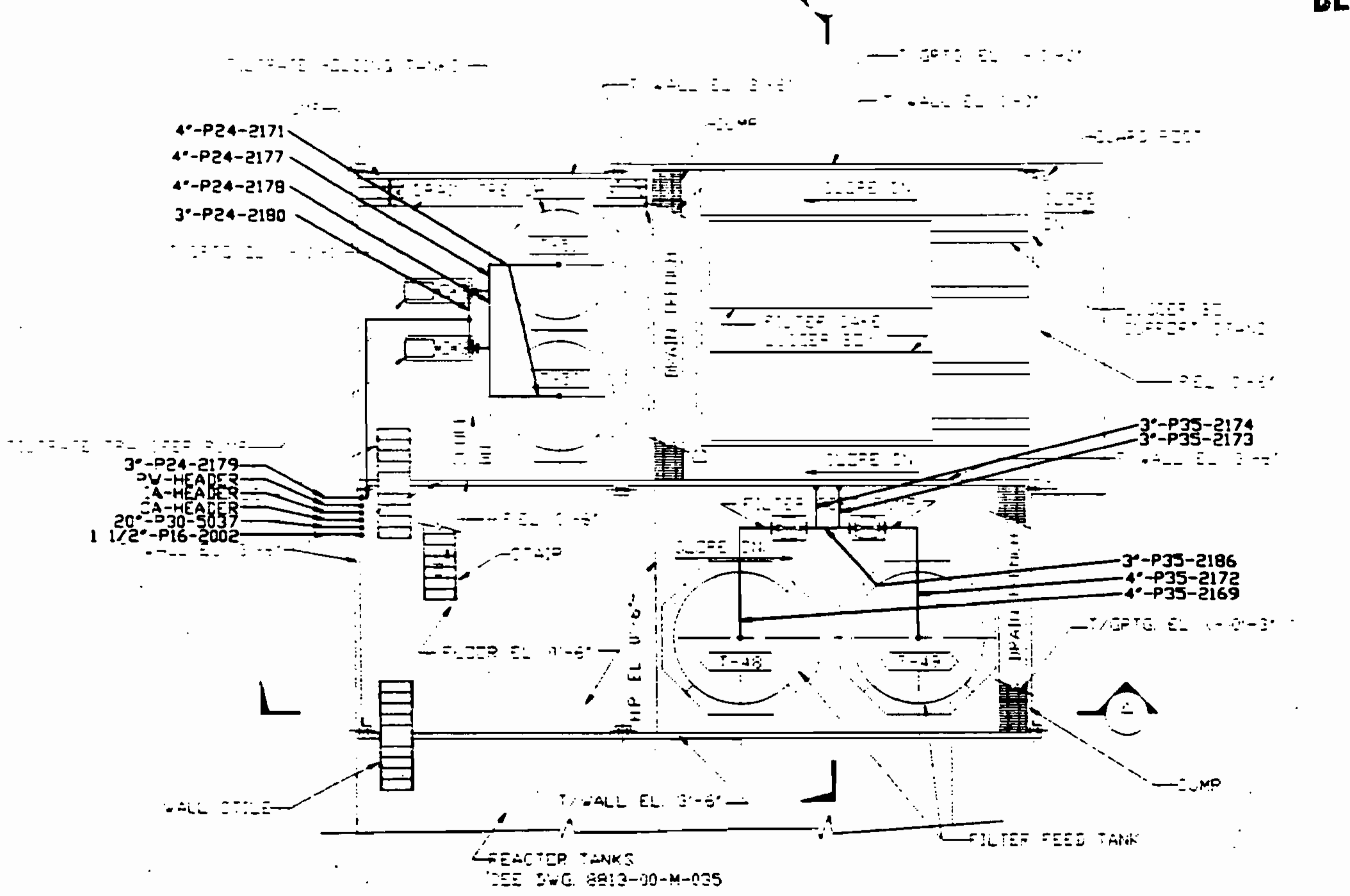

LOWER PLAN

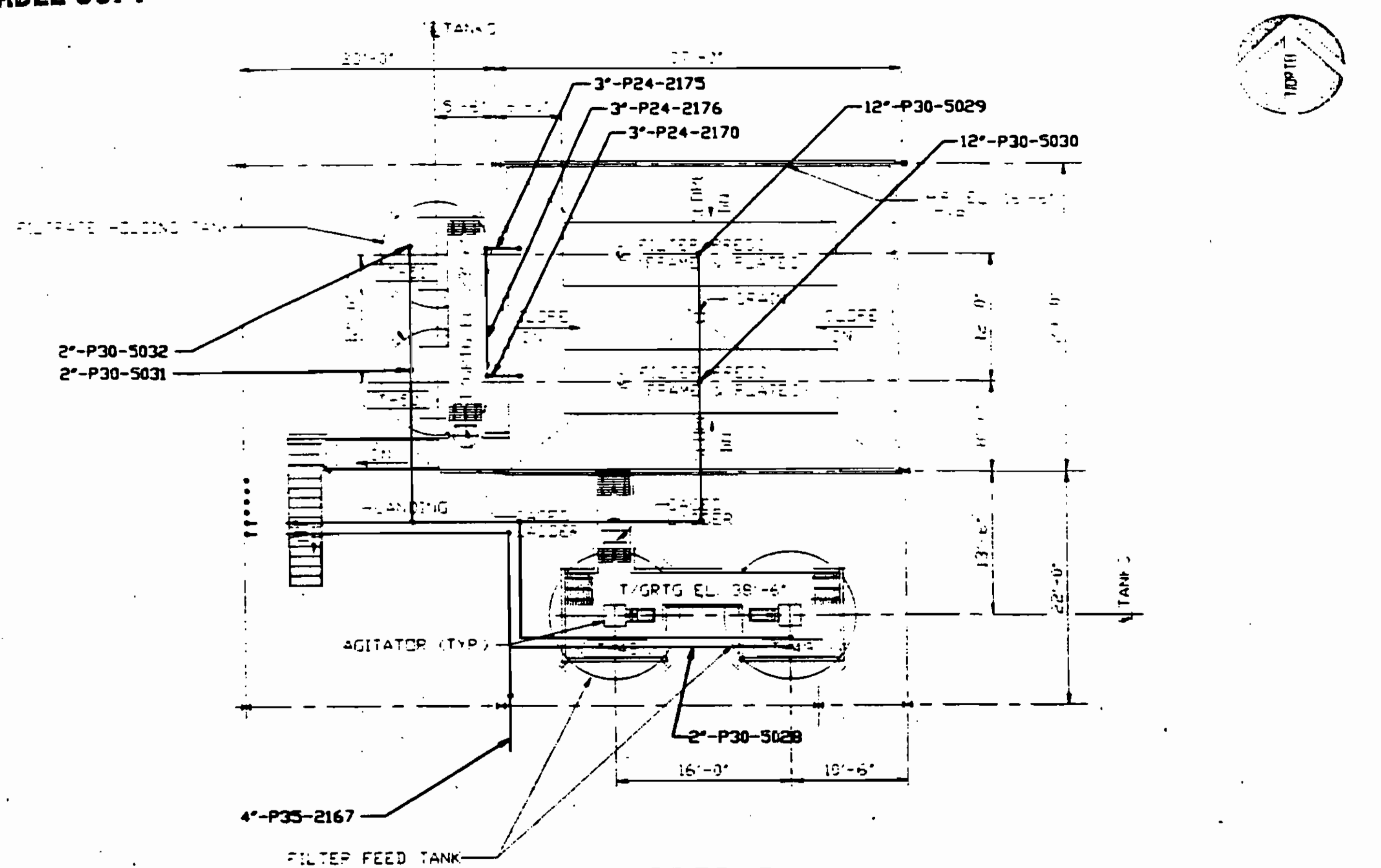

UPPER PLAN

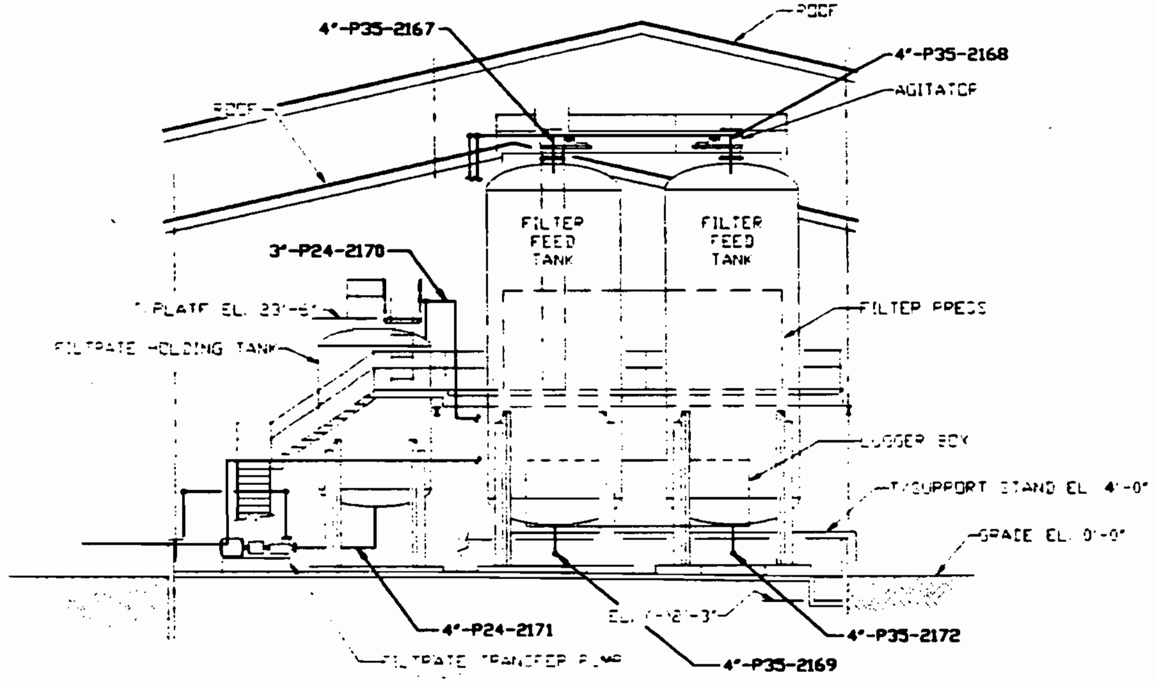

SECTION A

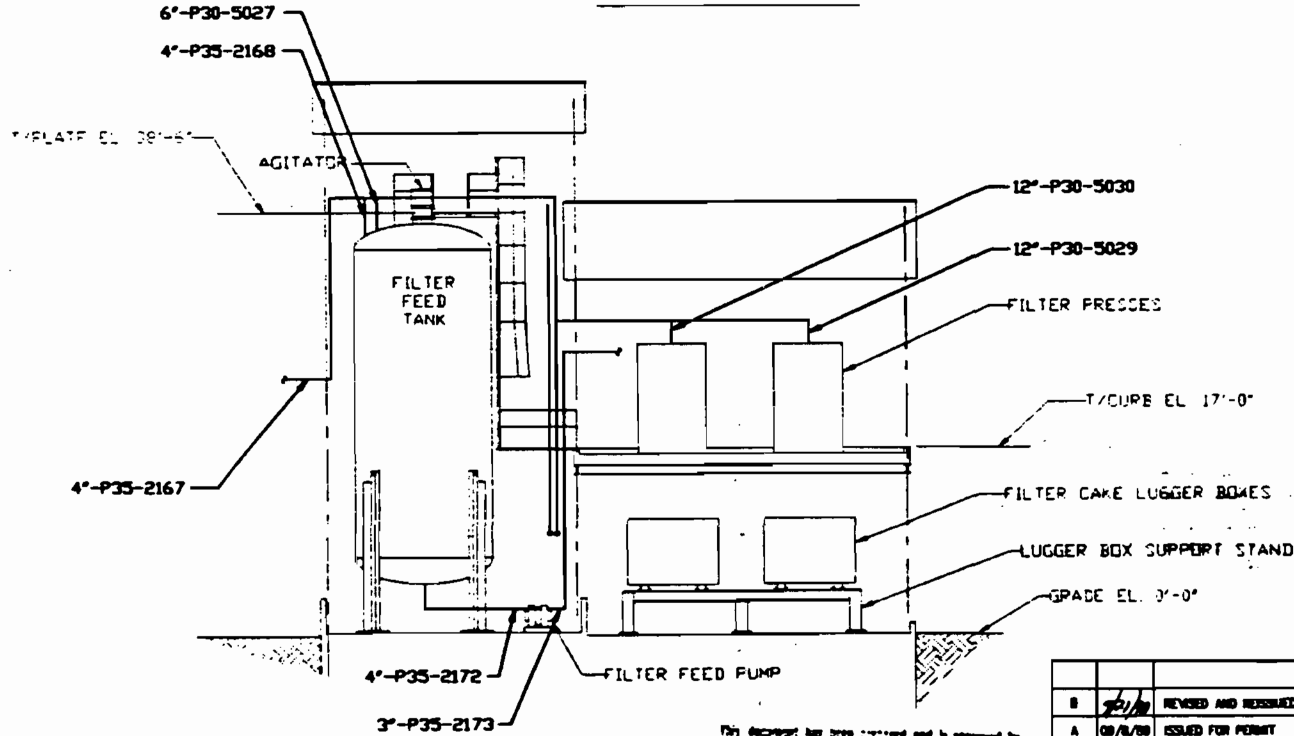

SECTION B

This document has been prepared and is approved by me for inclusion in environmental permit applications only. It is not an approved set to be used for equipment or material procurement, construction or any other purpose.

DICK M. MILLER
REGISTERED ENGINEER

REV.	DATE	REVISION	BY	CHKD
B		REVISED AND REISSUED FOR PERMIT	AMS	
A	08/8/88	ISSUED FOR PERMIT	BLF	AMS

PROJECT
FLORIDA FIRST
PROCESSING, INC.

SCALE:

International
WasteEnergy
Systems
ST. LOUIS, MO.

TITLE
GENERAL ARRANGEMENT
INORGANIC TREATMENT
SLUDGE DEWATERING
PLANS & SECTIONS
WITH PIPING

DRAWN	DATE	APPD	DATE	DRAWING NO.	REV.
BLF	8/08/88			8813-00-P-017	B
CHKD	DATE		DATE		

FILE NAME: \8813\8813P017.DWG

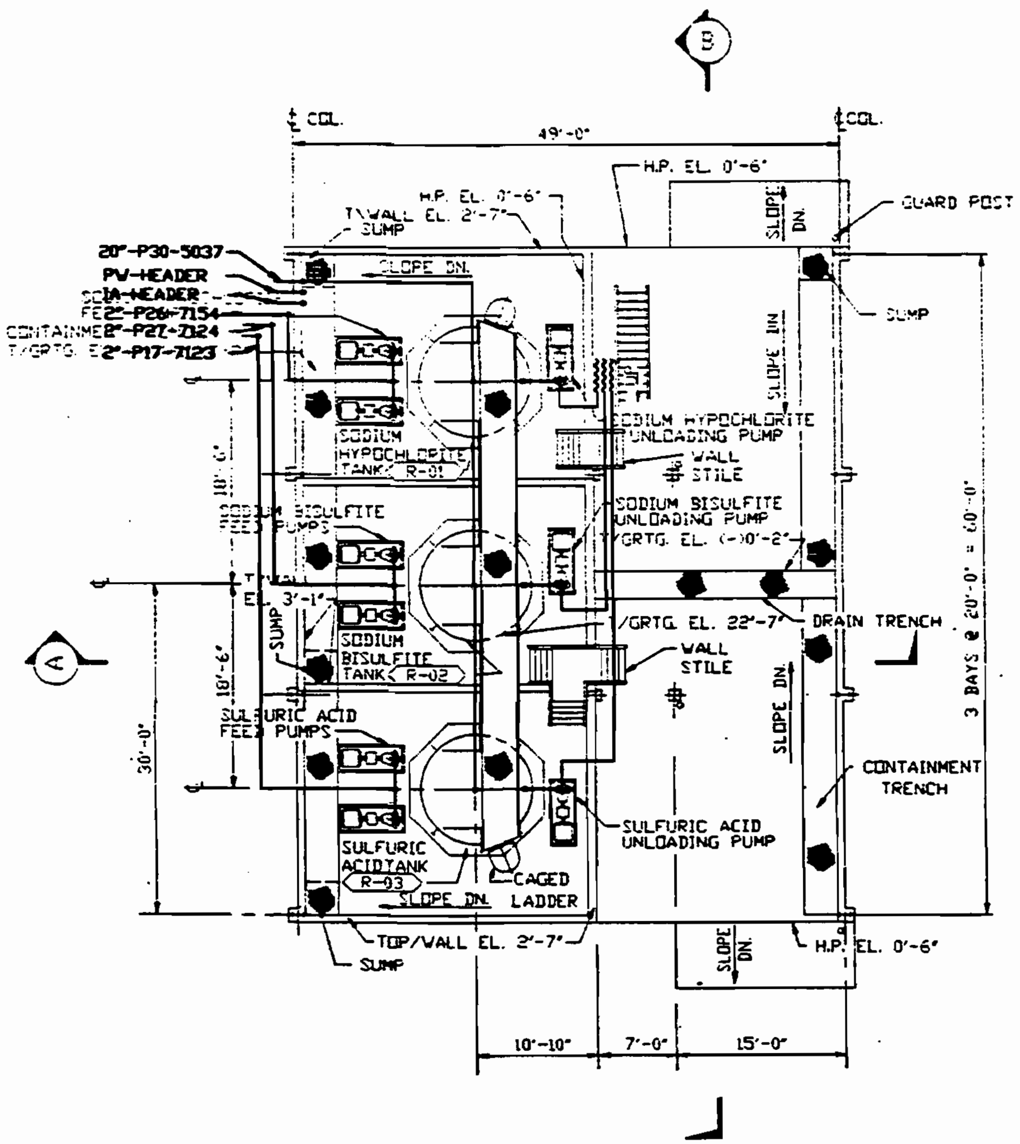

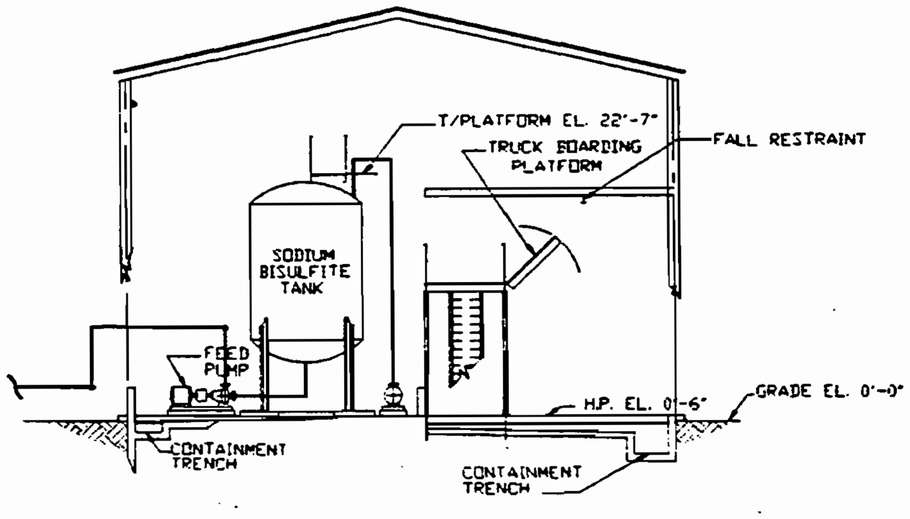

SECTION (A)

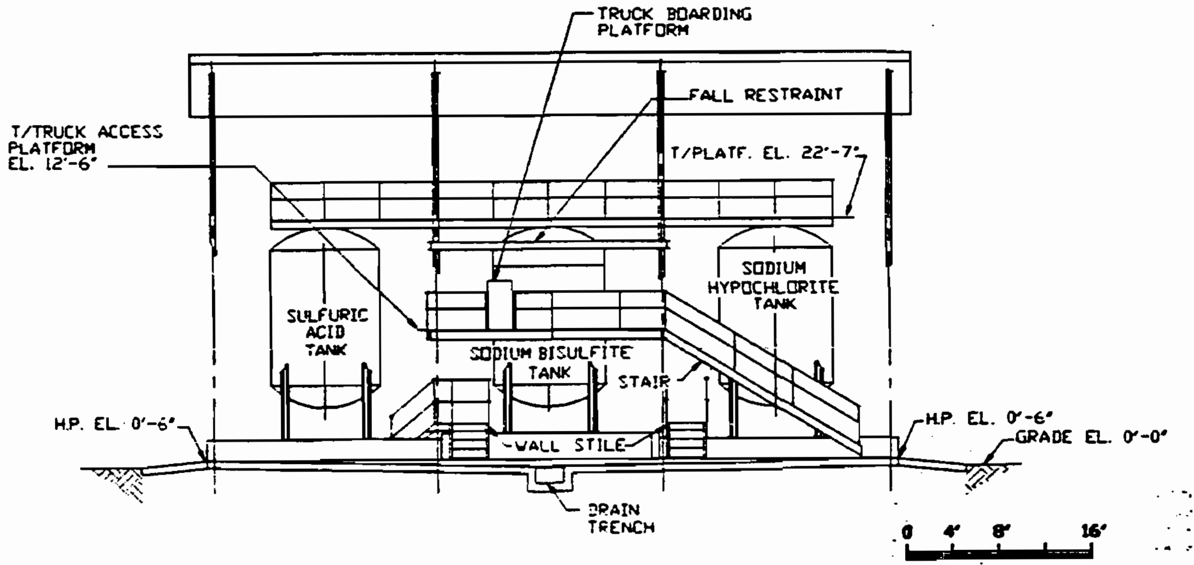

SECTION (B)

0 4' 8' 16'
SCALE

DICK N. MILLER
No. 27323

This document has been prepared and is approved
use for inclusion in environmental permit applicatio
only. It is neither approved nor is it to be used fo
equipment or material procurement, construction
any other purpose.

REV.	DATE	REVISION	BY	CHKD
B	9/30/90	REVISED AND REISSUED FOR PERMIT	ANS	
A	08/8/89	ISSUED FOR PERMIT	SLF	ANS

PROJECT
FLORIDA FIRST
PROCESSING, INC.

SCALE:

International
WasteEnergy
Systems
ST. LOUIS, MO.

TITLE
GENERAL ARRANGEMENT
INORGANIC TREATMENT
REAGENT UNLOADING AND STORAGE
PLAN AND SECTIONS
WITH PIPING

DRAWN	DATE	APPD	DATE	DRAWING NO.	REV.
GHB	7/27/89			8813-00-P-016	B
CHKD	DATE		DATE		

FILE NAME \8813\8813-00-P-016

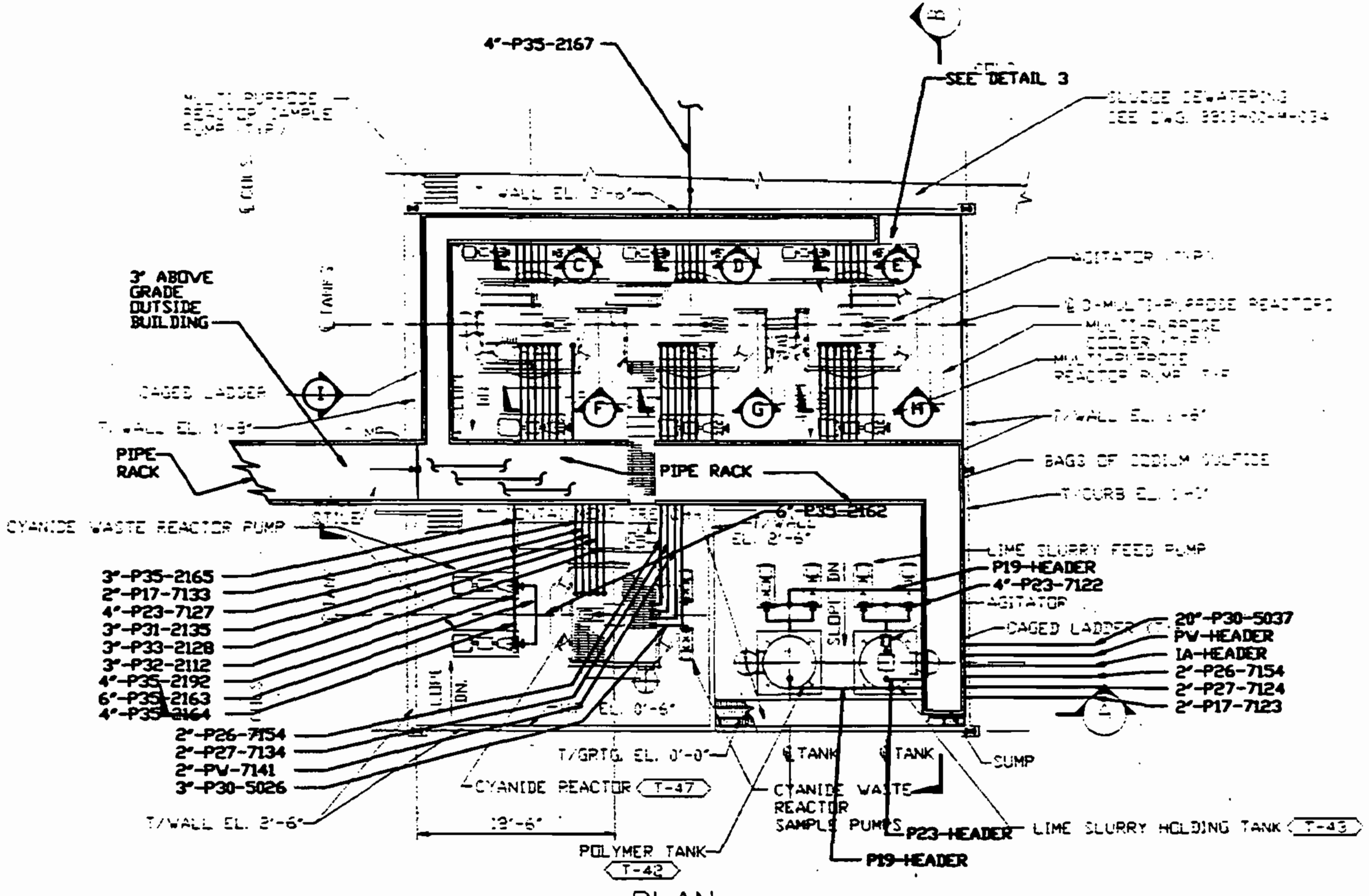

PLAN

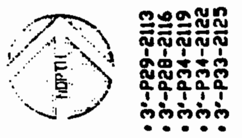

SECTION Ⓒ

SECTION Ⓓ

SECTION Ⓔ

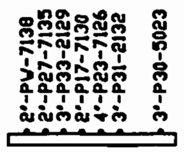

SECTION Ⓕ

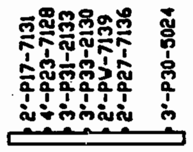

SECTION Ⓖ

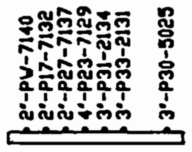

SECTION Ⓗ

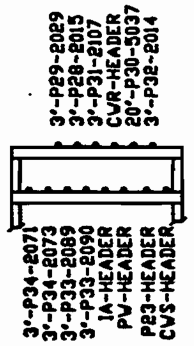

SECTION Ⓘ

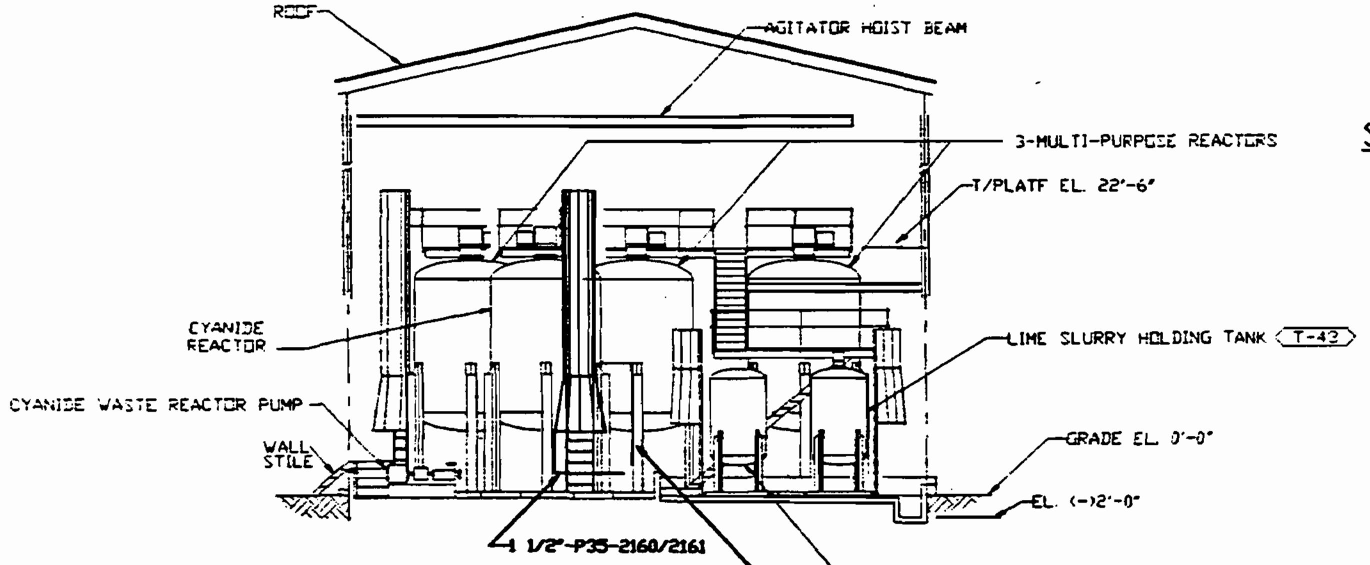

SECTION Ⓐ

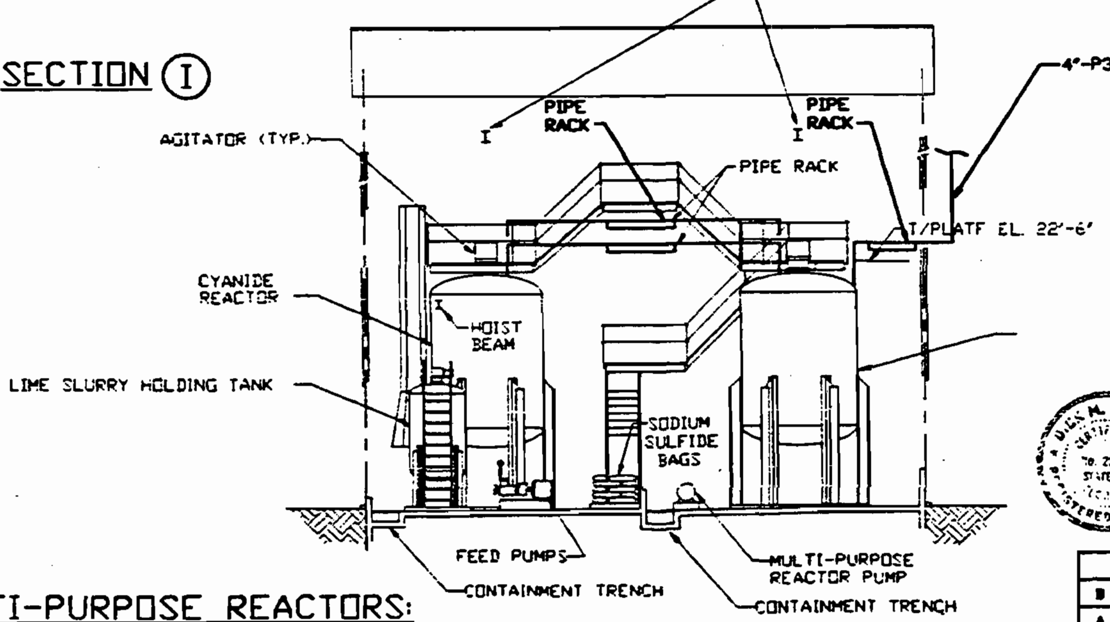

SECTION Ⓑ

DETAIL CYANIDE REACTOR

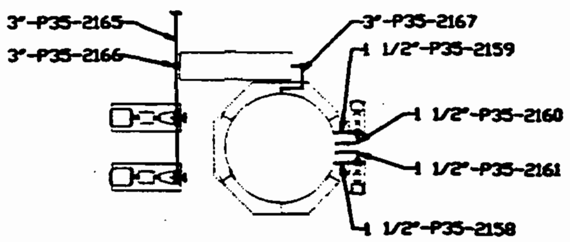

DETAIL 3 MULTI-PURPOSE REACTORS:

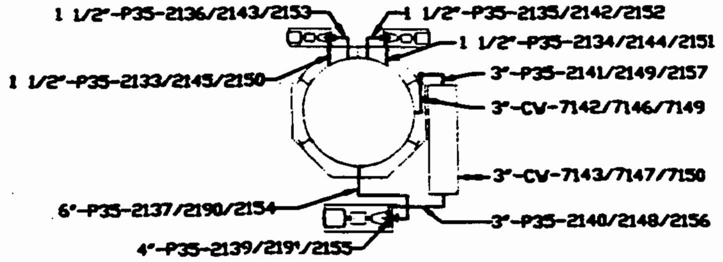

DICK M. MILLER
No. 20737
STATE OF ILLINOIS
REGISTERED PROFESSIONAL ENGINEER

This document has been prepared and is approved by me for inclusion in environmental permit applications only. It is neither intended nor is it to be used for [illegible] or partial procurement, construction or any other purpose.

REV.	DATE	REVISION	BY	CHKD
B	9/27/90	REVISED AND REISSUED FOR PERMIT	AMS	
A	08/8/89	ISSUED FOR PERMIT	BLF	AMS

PROJECT
FLORIDA FIRST
PROCESSING, INC.

SCALE:

International
WasteEnergy
Systems
ST. LOUIS, MO.

TITLE
GENERAL ARRANGEMENT
INORGANIC TREATMENT
REACTOR TANKS
PLAN AND SECTIONS
WITH PIPING

DRAWN	DATE	APPD	DATE	DRAWING NO.	REV.
GB	7/27/89			8813-00-P-018	B
CHKD	DATE		DATE		

FILE NAME \8813\ P018.DWG

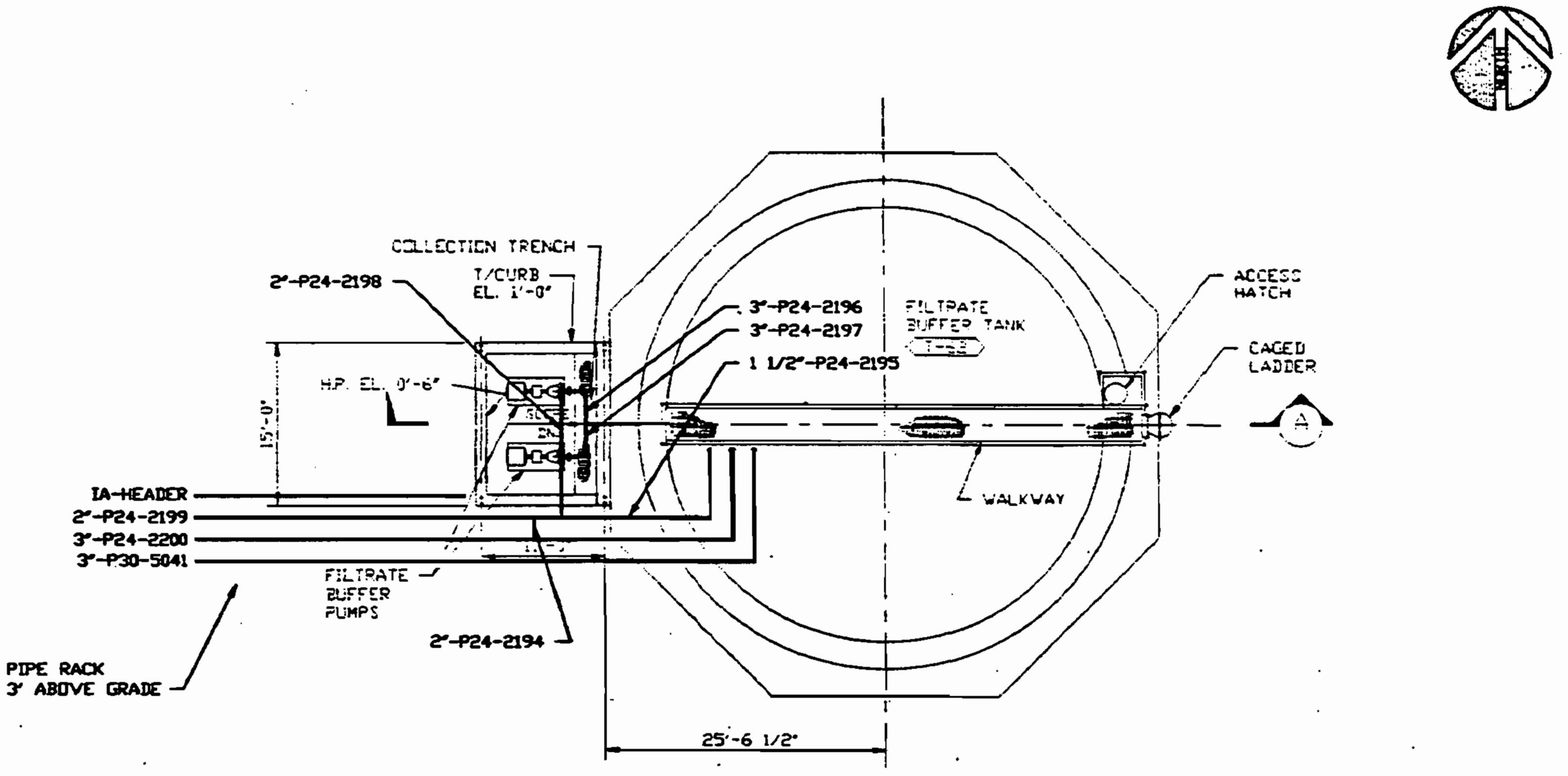

PLAN

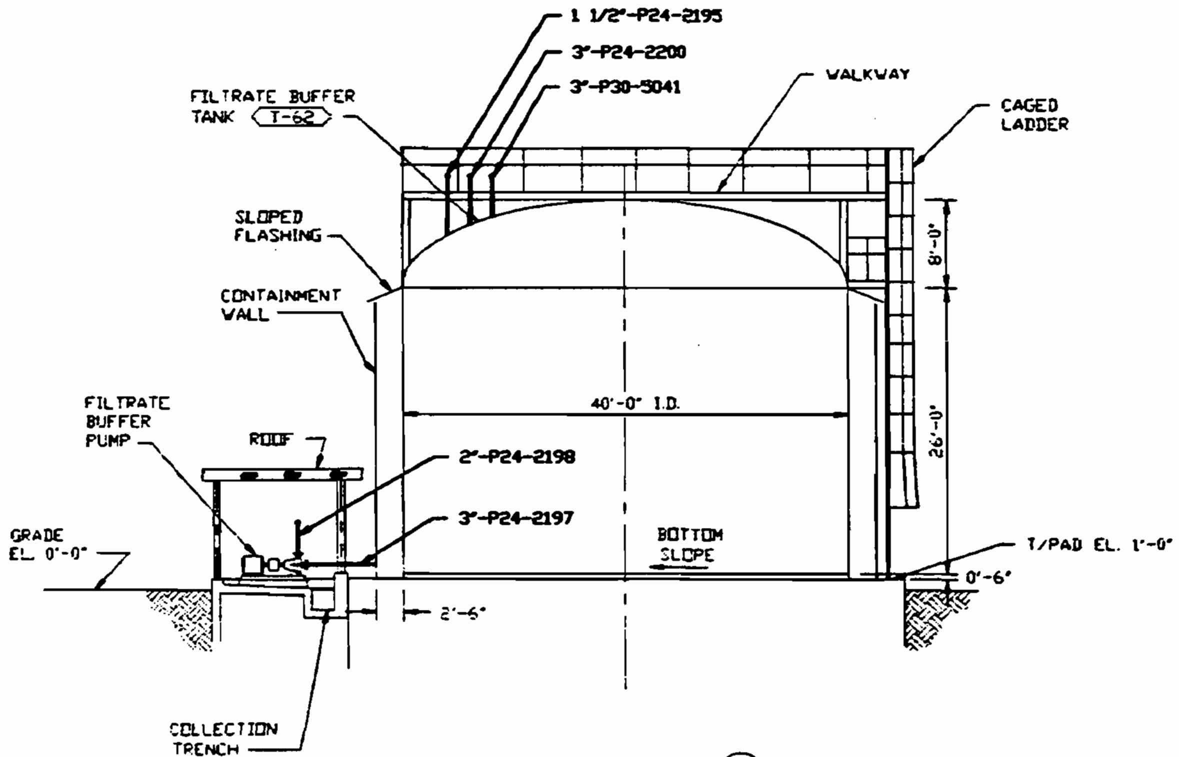

SECTION (A)

This document has been prepared and is approved by me for inclusion in environmental permit applications only. It is neither approved nor is it to be used for equipment or material procurement, construction or any other purpose.

DICK M. MILLER
No. 20927
STATE OF FLORIDA

0 4' 8' 16'
SCALE

REV.	DATE	REVISION	BY	CHKD
C	10/9/90	ISSUED FOR PERMIT	AMS	[illegible]
B	10/3/90	ISSUED FOR CLIENT REVIEW	AMS	ECS
A	10/3/90	ISSUED FOR INTERNAL REVIEW	AMS	ECS

SCALE:

International WasteEnergy Systems
ST. LOUIS, MO.

PROJECT
FLORIDA FIRST
PROCESSING, INC.

TITLE
GENERAL ARRANGEMENT
INORGANIC TREATMENT
FILTRATE BUFFER TANK
PLAN & SECTION WITH PIPING

DRAWN	DATE	APPD	DATE	DRAWING NO.	REV.
WF	10/1/90			8813-00-P-019	C
CHKD	DATE		DATE		

FILE NAME: \8813\8813P019.DWG

C-1

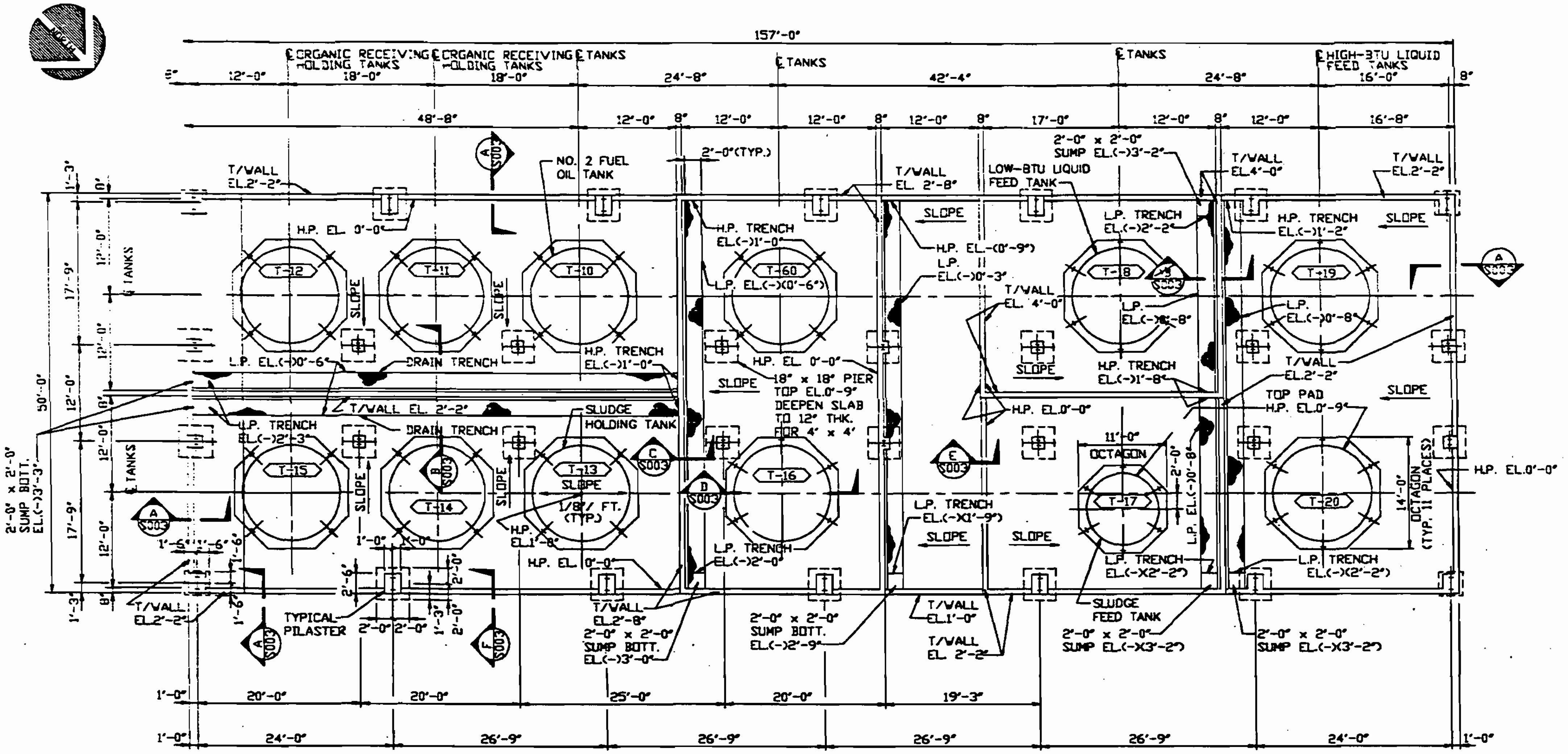

GENERAL CONCRETE AND FOUNDATION NOTES.

1. ALL WORK SHALL BE PERFORMED IN ACCORDANCE WITH ALL APPLICABLE STATE AND LOCAL BUILDING CODES AND ORDINANCES AND ALL O.S.H.A. REQUIRMENTS AND REGULATIONS.
2. ALL FOUNDATION EXCAVATION SHALL BE CARRIED TO FIRM MATERIAL. SHOULD THIS NECESSITATE EXCAVATING DEEPER THAN BOTTOM OF FOUNDATION ELEVATIONS SHOWN ON THE DRAWINGS. THE OVER EXCAVATION SHALL BE BACKFILLED WITH LEAN CONCRETE OR AS SPECIFIED.
3. BACKFILL SHALL BE PLACED IN UNIFORM LAYERS ON ALL SIDES OF FOUNDATIONS AND PROPERLY COMPACTED.
4. FOUNDATIONS SHALL BEAR ON FIRM, NATURAL UNDISTURBED SOIL. PRESUMED ALLOWABLE BEARING PRESSURE = 3000 PSF.
5. FOUNDATION BEARING SURFACES SHALL BE INSPECTED BY THE OWNER'S REPRESENTATIVE PRIOR TO PLACEMENT OF CONCRETE.
6. ALL CONCRETE FLOORS SHALL HAVE A WOOD TROWEL UNPOLISHED NON-SLIP FINISH WITHOUT ADDITION OF ABRASIVE AGGREGATE.
7. ALL EXPOSED CONCRETE EDGES SHALL HAVE A 3/4" CHAMFER.
8. ALL MATERIALS AND EQUIPMENT SHALL BE INSTALLED IN ACCORDANCE WITH THE MANUFACTURERS RECOMMENDATIONS.
9. CONTRACTOR SHALL VERIFY ALL DIMENSIONS PRIOR TO STARTING CONSTRUCTION AND SHALL NOTIFY ENGINEER IF ANY DISCREPANCIES ARE FOUND.
10. ALL CONCRETE SHALL COMPLY WITH THE LATEST ACI DETAILING MANUAL, BUILDING CODE REQUIREMENTS FOR REINFORCED CONCRETE AND SPECIFICATION FOR STRUCTURAL CONCRETE FOR BUILDINGS.
11. CONCRETE SHALL MEET THE FOLLOWING COMPRESSIVE STRENGTHS AT 28 DAYS: A. 3000 PSI -FOUNDATIONS B. 4000 PSI - ALL OTHER CONCRETE INCLUDING SLABS ON GRADE.
12. ALL REINFORCING SHALL CONFORM TO ASTM A615. GRADE 60, INCLUDING TIES.
13. WELDED WIRE FABRIC SHALL CONFORM TO ASTM A185.
14. ALL CONSTRUCTION JOINTS WITHIN CONTAINMENT BASINS SHALL BE KEYED AND SHALL HAVE A CONTINUOUS POLYETHYLENE WATER STOP EXTENDING NOT LESS THAN (3) INCHES INTO EACH JOINTED SECTION. THE SURFACE OF SAID JOINT SHALL BE SEALED WITH CARBOLINE 163-2 SEALER MATERIAL. THE PREPARATION OF THE CONCRETE SURFACE AND THE APPLICATION OF THE SEALER MATERIAL SHALL BE AS RECOMMENDED BY THE MANUFACTURER. IN SLAB WITH THICKNESS LESS THAN 6" AT THE CONSTRUCTION JOINT. THE BOTTOM OF THE THICKENED SECTIONS SHALL CONVERGE BACK TO THE NORMAL SLAB THICKNESS ON AN INVERTED SLOPE OF ONE (1) TO ONE (1) AND ALL REINFORCING SHALL EXTEND THROUGH THE JOINT.
15. ALL PREMOLDED EXPANSION JOINT FILLERS SHALL BE POLYETHLENE VINYLTEX (NON-BITUMINOUS) TYPE MANUFACTURED BY J&P PETROLEUM PRODUCTS, INC. OR EQUAL.
16. SLAB ON GRADE SHALL BE POURED MONOLITHICALLY EXCEPT AT EXPANSION AND CONSTRUCTION JOINTS SHOWN ON DRAWINGS.
17. ALL PUMPS SHALL HAVE FOOT-SUPPORTED BASE PLATES.
18. ALL AREAS OF FILL FOR FOUNDATIONS AND SLABS ON GRADE SHALL BE COMPACTED TO A FIELD DENSITY OF 95 PERCENT OF STANDARD PROCTOR LABORATORY DENSITY ASTM D 698.

DICK M. MILLER
STATE OF FLORIDA

REV.	DATE	REVISION	BY	CHKD
E	4/20/90	REVISED & REISSUED FOR PERMIT	R.S.M.	JZS
D	9/20/89	GENERAL REVISION	S.C.H.	J.L.S.
C	4/28/89	ISSUED FOR PERMIT	T.E.R.	J.L.S.
B	3/8/89	ISSUED FOR CLIENT REVIEW	M.J.A.	J.L.S.
A	1/12/89	ISSUED FOR INTERNAL REVIEW	M.J.A.	

PROJECT
FLORIDA FIRST
PROCESSING, INC.

SCALE: NTS

International
WasteEnergy
Systems
ST. LOUIS, MO.

TITLE
ORGANIC TREATMENT
FOUNDATION PLAN
PUMPABLE WASTE STORAGE

DRAWN	DATE	APPD	DATE	DRAWING NO.	REV.
M.J.A.	1/09/89			8813-00-S-001	E
CHKD	DATE		DATE		

8813S001

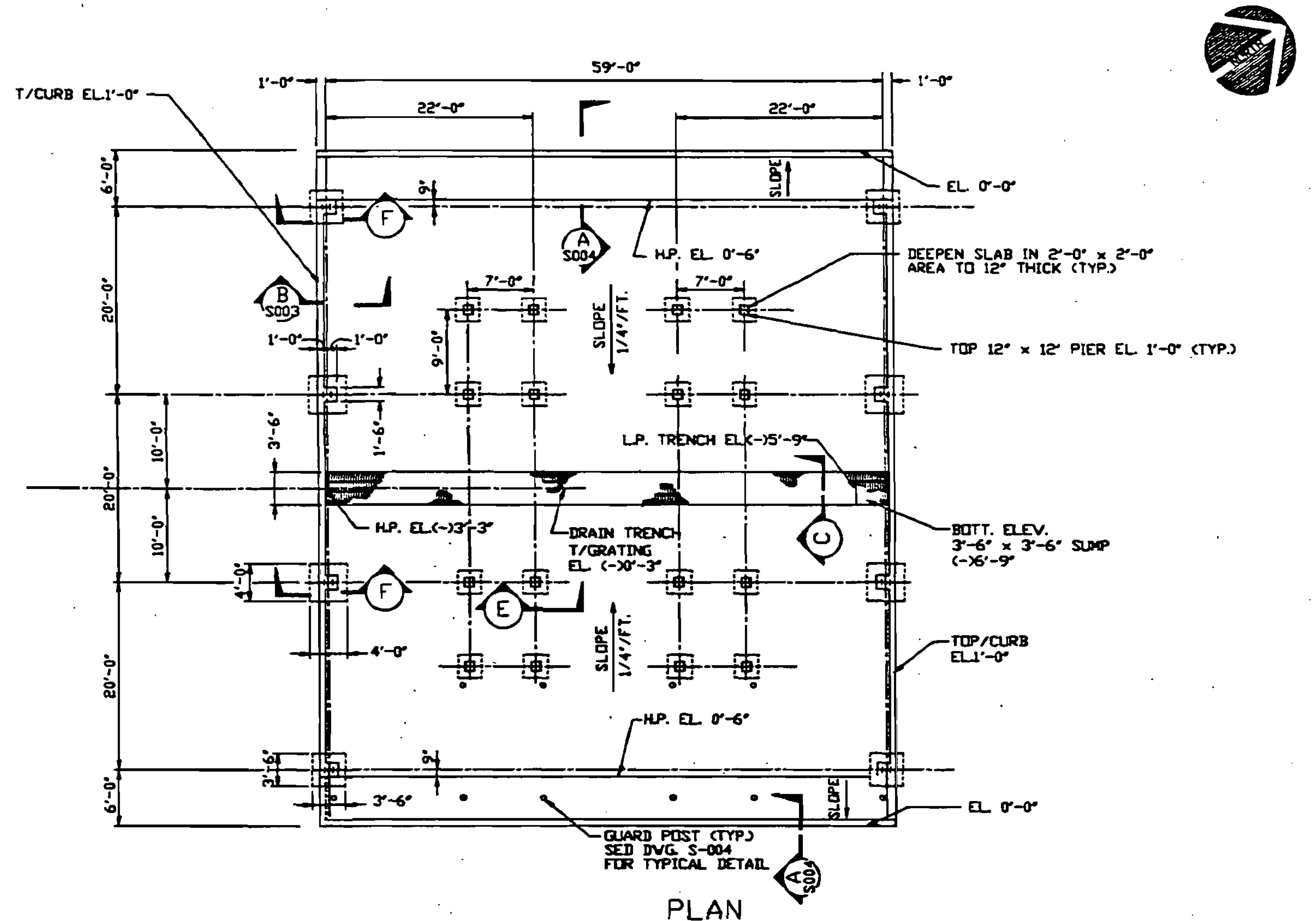

PLAN

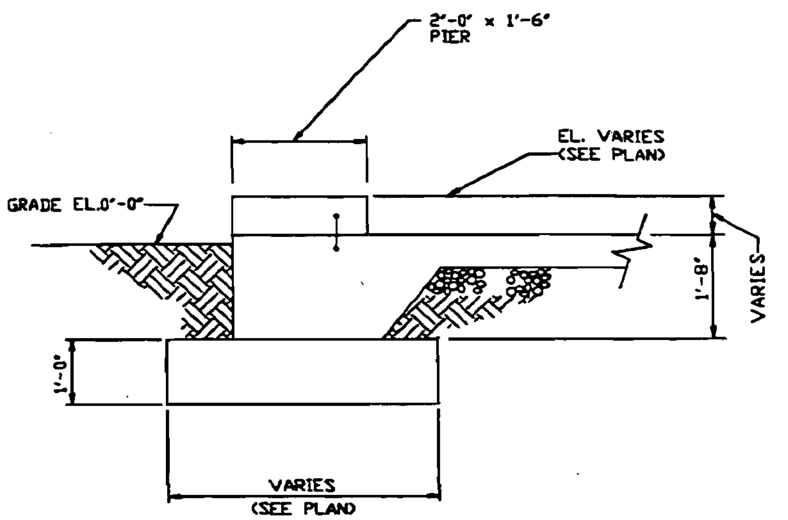

SECTION F

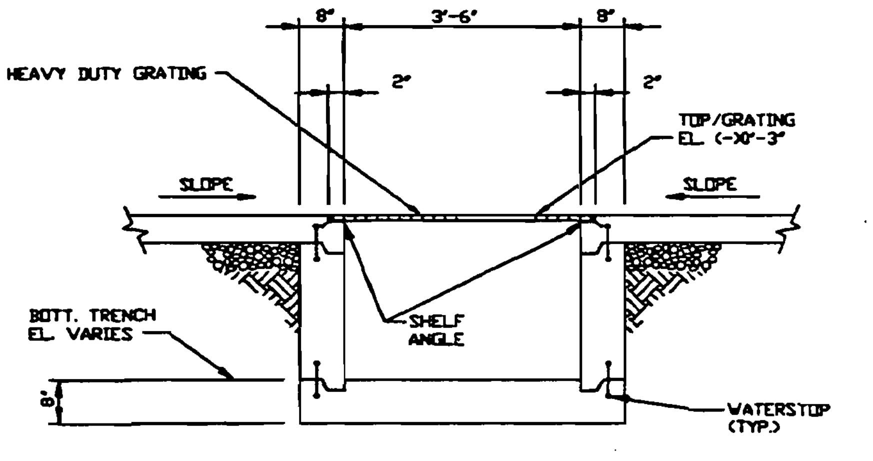

SECTION C

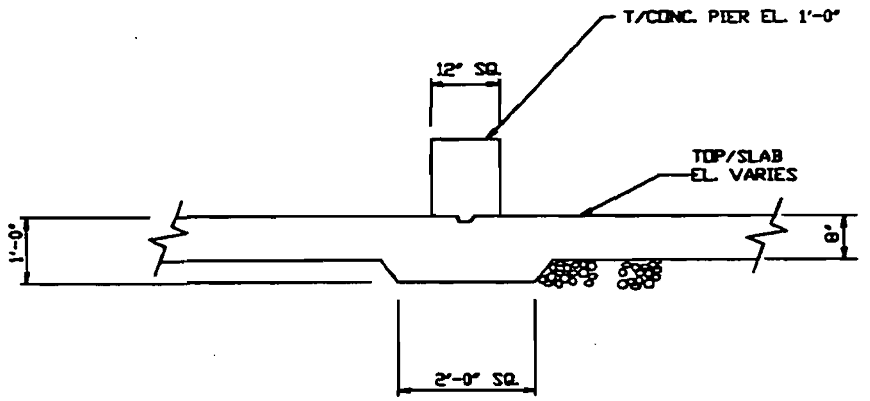

SECTION E

NOTES:

1) FOR GENERAL CONCRETE AND FOUNDATION NOTES SEE DRAWING 8813-00-S-001

[illegible]

REV.	DATE	REVISION	BY	CHKD
D	9/21/90	REVISED & REISSUED FOR PERMIT	R.S.M.	JCS
C	4/28/89	ISSUED FOR PERMIT	T.E.R.	J.L.S.
B	3/8/89	ISSUED FOR CLIENT REVIEW	M.J.A.	J.L.S.
A	1/8/89	ISSUED FOR INTERNAL REVIEW	M.K.	

PROJECT
FLORIDA FIRST
PROCESSING, INC.

SCALE: NTS

International
WasteEnergy
Systems
ST. LOUIS, MO.

TITLE
ORGANIC TREATMENT
TANK TRUCK UNLOADING
FOUNDATION PLAN & SECTIONS

DRAWN	DATE	APPD	DATE	DRAWING NO.	REV.
M.K.	1/5/89			8813-00-S-002	D
CHKD	DATE		DATE		

8813S002

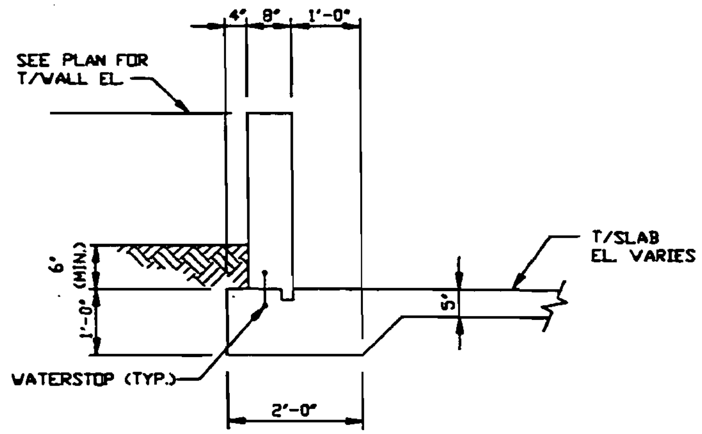

SECTION A S001

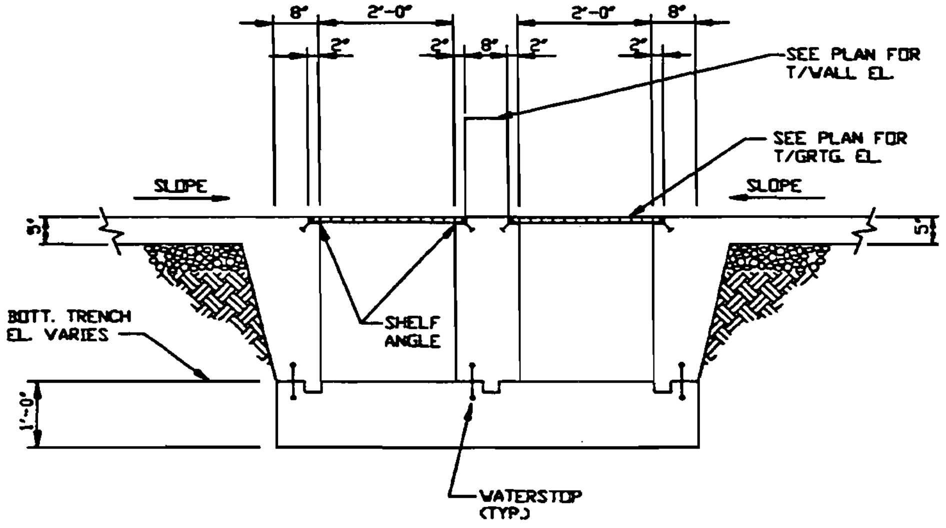

SECTION B S001

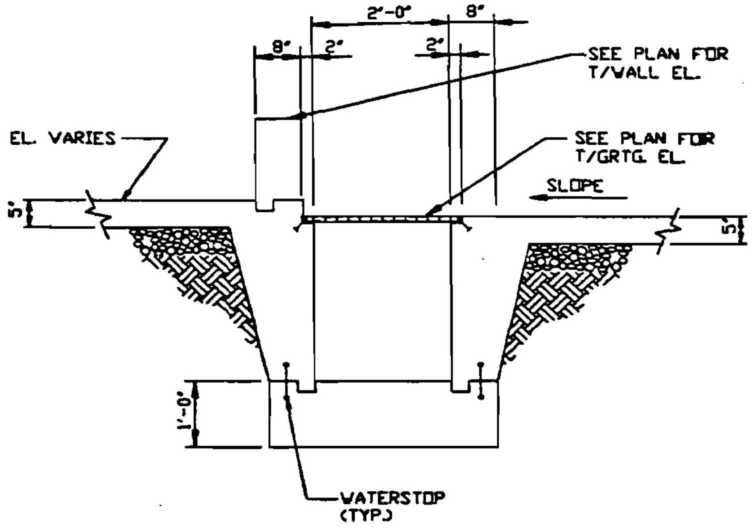

SECTION C S001

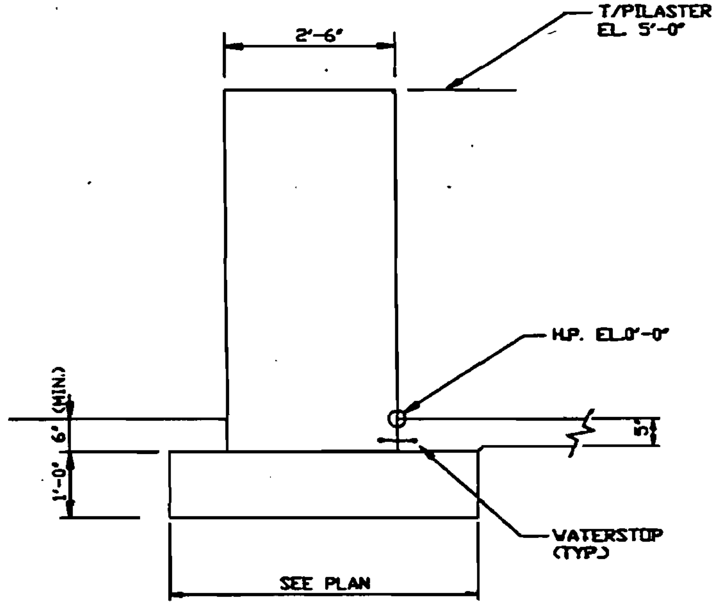

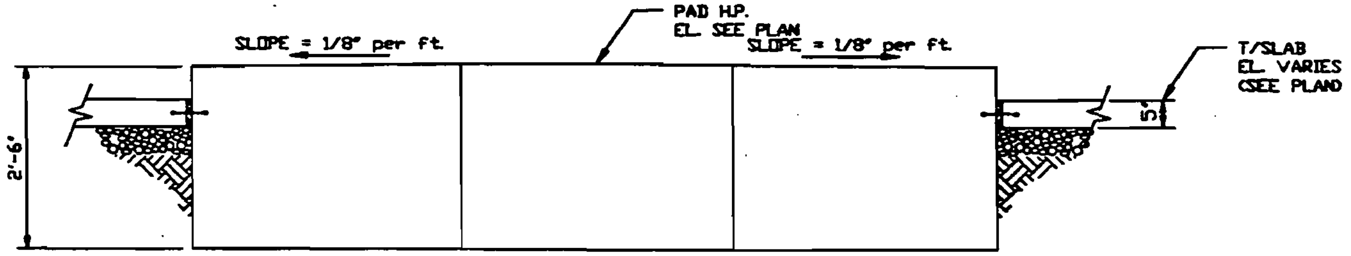

SECTION D S005, S-017

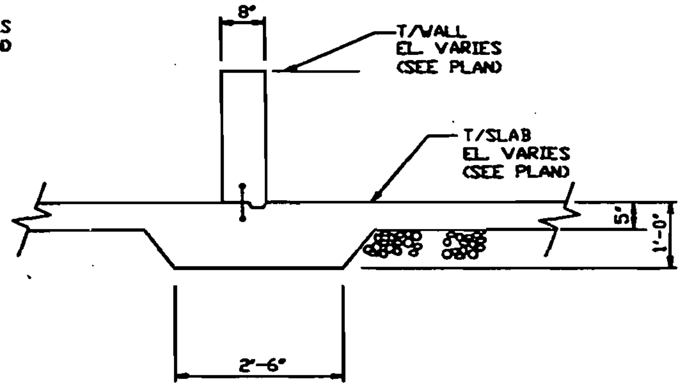

SECTION E S001

SECTION F S001

DICK M. MILLER

This document has been prepared and is approved by me for inclusion in [illegible] permit applications only. [illegible] procurement, construction or [illegible]

REV.	DATE	REVISION	BY	CHKD
D	9/21/90	REVISED AND REISSUED FOR PERMIT	R.S.M.	JCS
C	4/28/90	ISSUED FOR PERMIT	T.E.R.	J.L.S.
B	3/8/89	ISSUED FOR CLIENT REVIEW	M.J.A.	J.L.S.
A	01/10/89	ISSUED FOR INTERNAL REVIEW	M.K.	

PROJECT
FLORIDA FIRST
PROCESSING, INC.

SCALE: NTS

International
WasteEnergy
Systems
ST. LOUIS, MO.

TITLE
ORGANIC TREATMENT
TANKS – FOUNDATION SECTIONS/DETAILS
PUMPABLE WASTE STORAGE

DRAWN	DATE	APPD	DATE	DRAWING NO.	REV.
M.K.	1/3/89			8813-00-S-003	D
CHKD	DATE		DATE		

8813S003

D-1

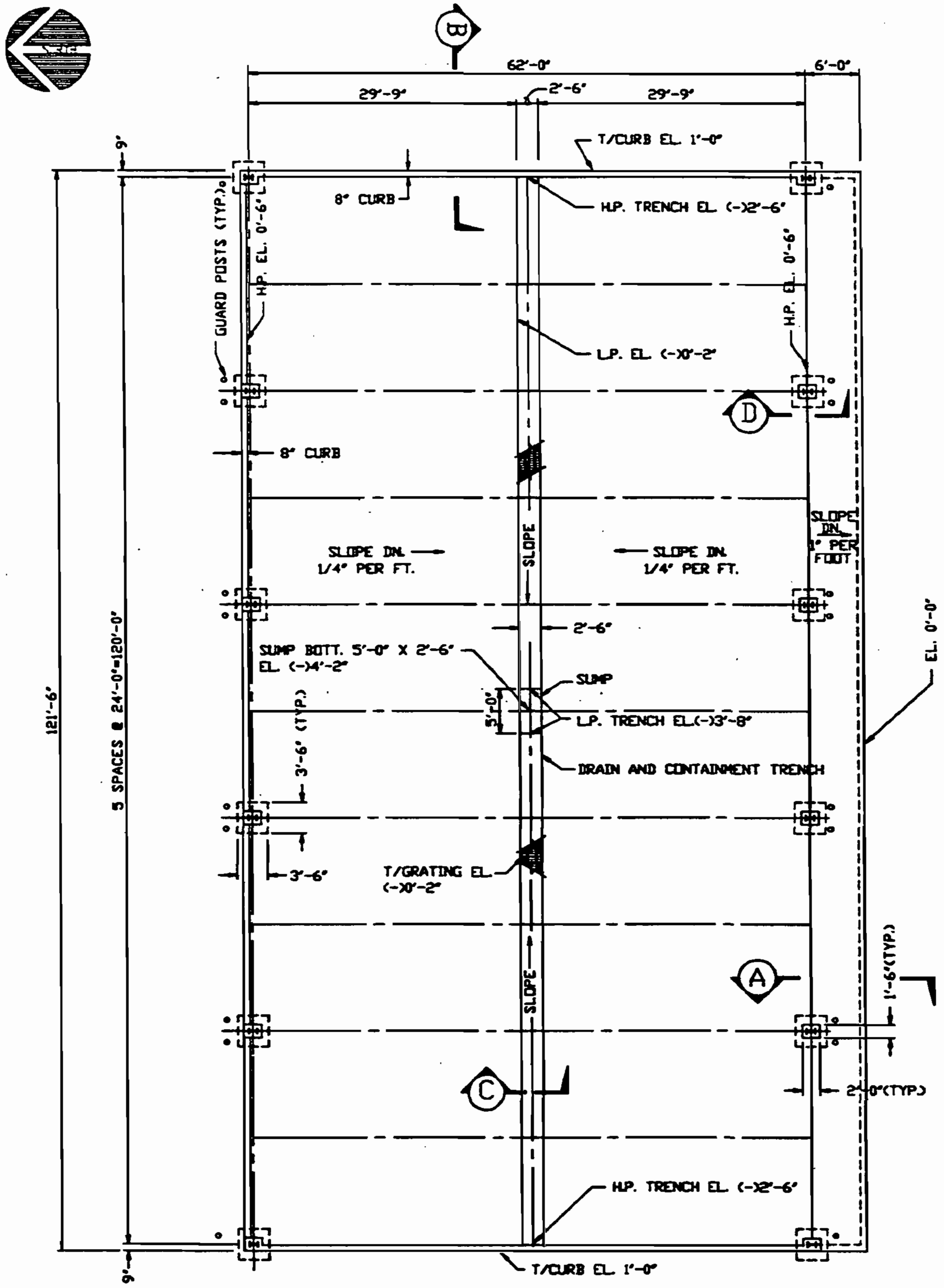

PLAN

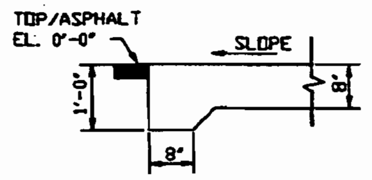

SECTION A

S-002, S-004, S-005, S-007, S-008, S-013, S-016, S-017

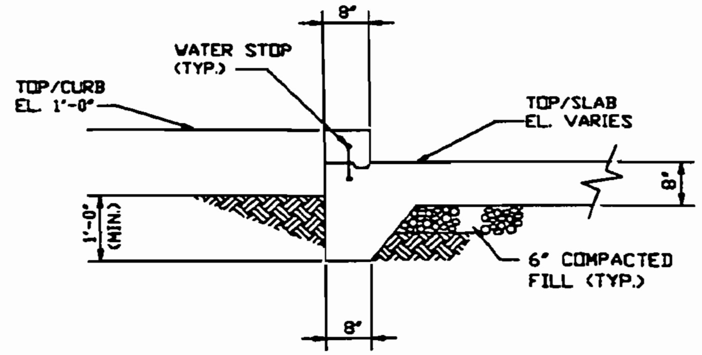

SECTION B

S-002, S-004, S-008, S-010, S-013, S-017

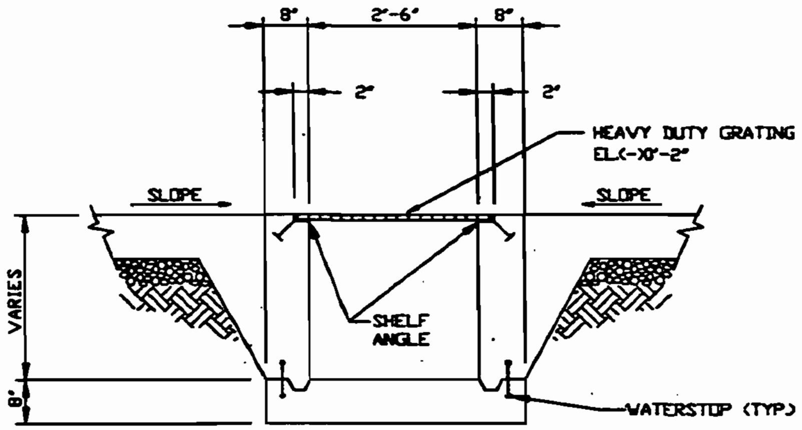

SECTION C

S-004, S-013, S-017

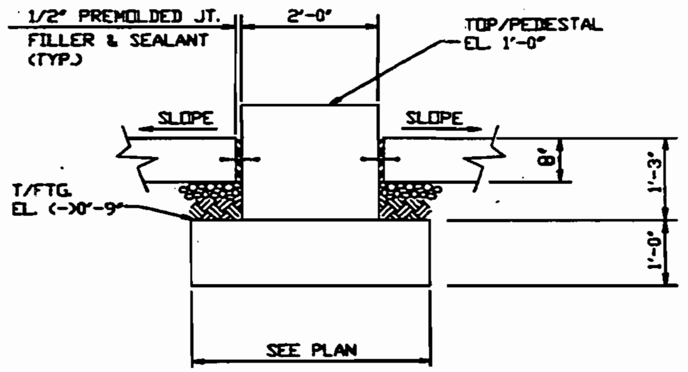

SECTION D

S-004, S-013

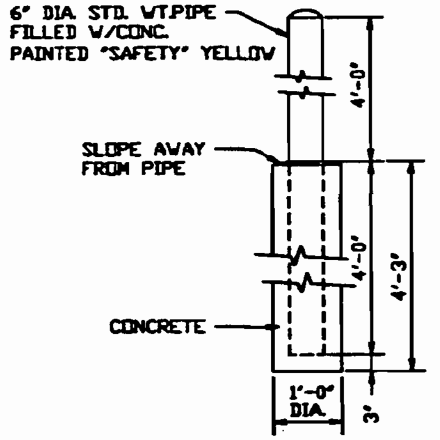

TYPICAL GUARD POST DETAIL

NOTES:

1) FOR GENERAL CONCRETE AND FOUNDATION NOTES SEE DRAWING 8813-00-S-001

REV.	DATE	REVISION	BY	CHKD
E	9/23/90	REVISED & REISSUED FOR PERMIT	R.S.M.	JZS
D	5/01/89	GEN. REVISION & REISSUED FOR PERMIT	T.E.R.	J.L.S.
C	4/28/89	ISSUED FOR PERMIT	T.E.R.	J.L.S.
B	1/31/89	ISSUED FOR CLIENT REVIEW	M.J.A.	
A	1/6/89	ISSUED FOR INTERNAL REVIEW	M.K.	

PROJECT
FLORIDA FIRST
PROCESSING, INC.

TITLE
TRUCK AND LUGGER BOX STAGING
FOUNDATION PLAN & SECTIONS

SCALE: NTS

International
WasteEnergy
Systems
ST. LOUIS, MO.

DRAWN	DATE	APPD	DATE	DRAWING NO.	REV.
M.K.	1/4/89			8813-00-S-004	E
CHKD	DATE		DATE		

8813S004

E-2

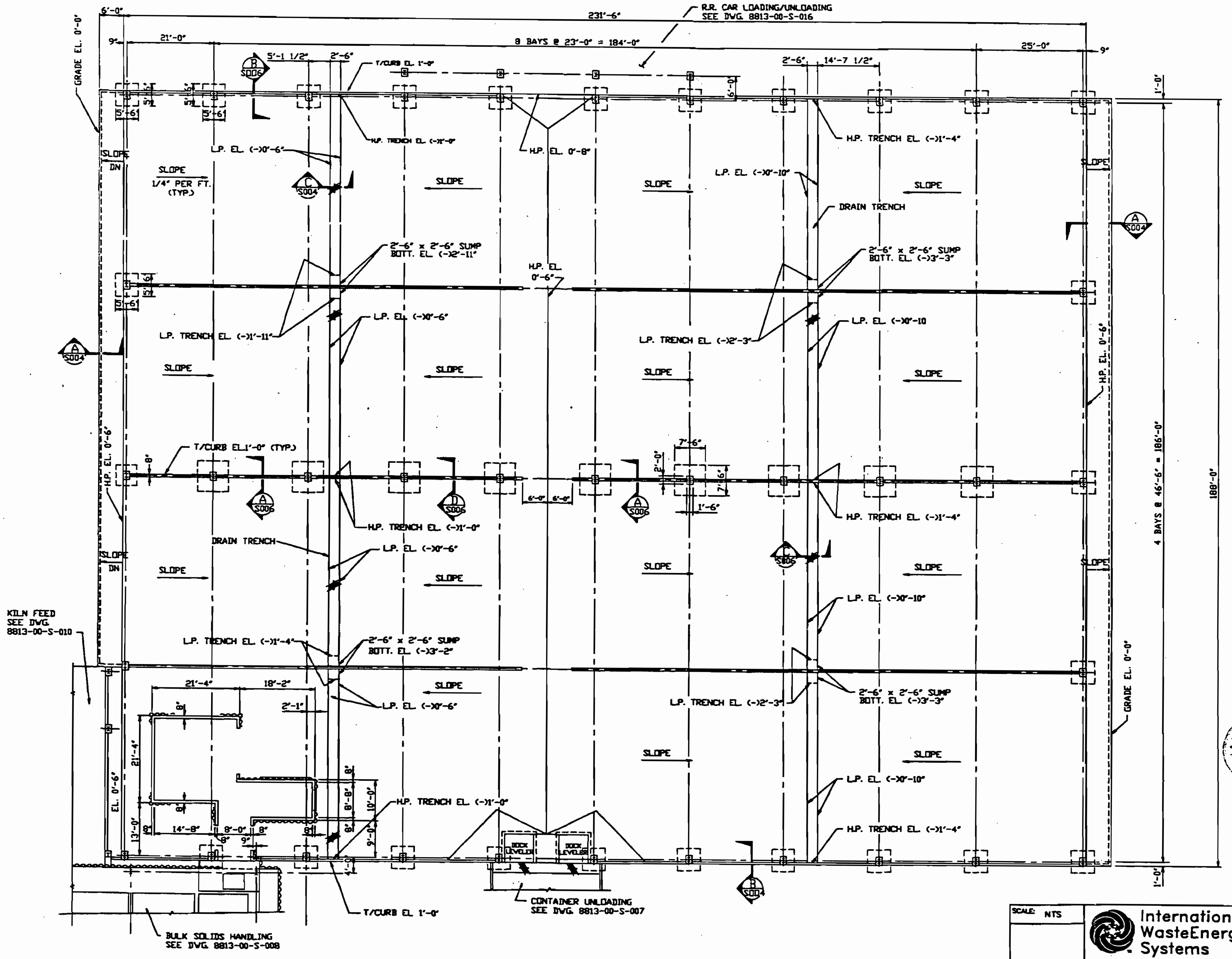

NOTES:

1) FOR GENERAL CONCRETE AND FOUNDATION NOTES SEE DRAWING 8813-00-S-001

DILA M. MILLER
No. 7227
STATE OF FLORIDA
REGISTERED ENGINEER

REV.	DATE	REVISION	BY	CHKD
D	9/21/90	REVISED AND REISSUED FOR PERMIT	R.S.M.	OZG
C	4/28/89	ISSUED FOR PERMIT	T.E.R.	J.L.S.
B	3/8/89	ISSUED FOR CLIENT REVIEW	M.K.	J.L.S.
A	1/9/89	ISSUED FOR INTERNAL REVIEW	M.K.	

PROJECT
FLORIDA FIRST
PROCESSING, INC.

SCALE: NTS

International
WasteEnergy
Systems
ST. LOUIS, MO.

TITLE
ORGANIC TREATMENT
CONTAINER STAGING/PROCESSING
FOUNDATION PLAN

DRAWN	DATE	APPD	DATE	DRAWING NO.	REV.
M.K.	1/9/89				
CHKD	DATE		DATE	8813-00-S-005	D

8813S005

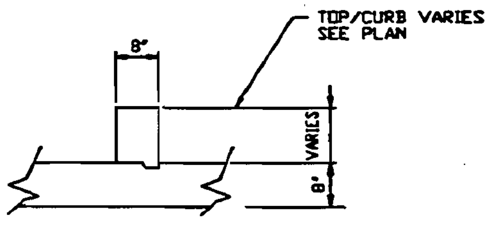

SECTION A S005

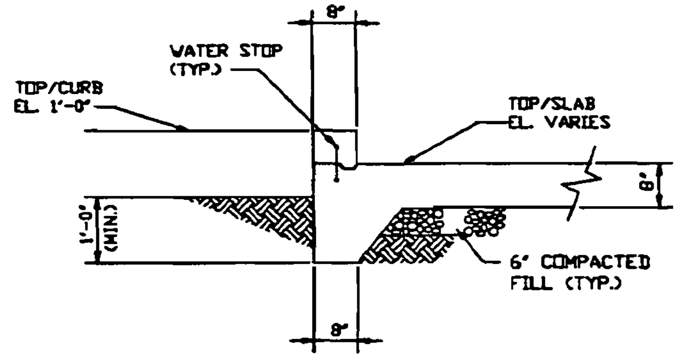

SECTION B S-005

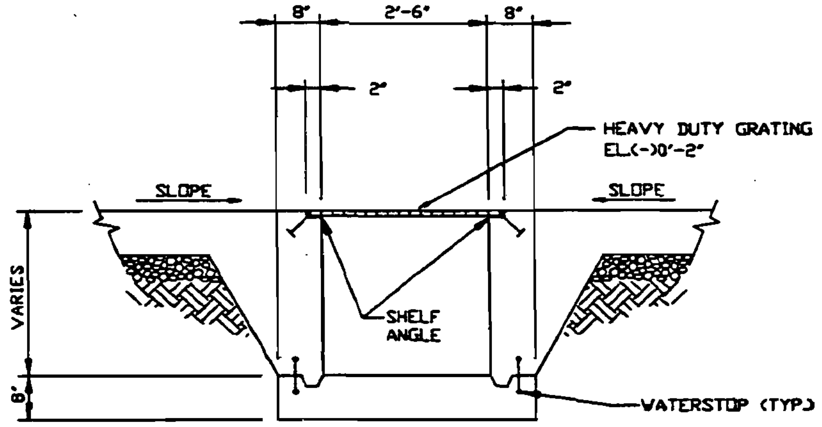

SECTION C S-005

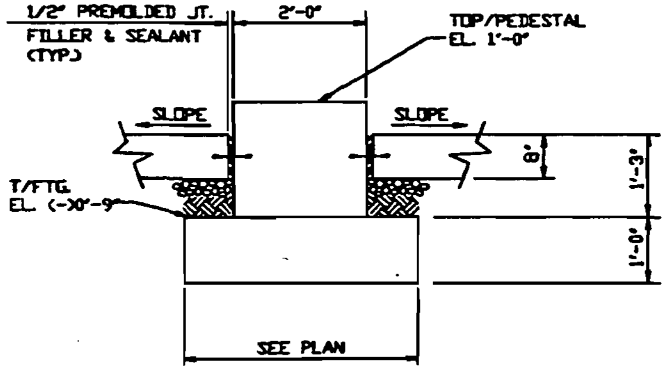

SECTION D S-005

[illegible]

D	9/21/10	REVISED AND REISSUED FOR PERMIT	R.S.M.	JLS
C	4/28/09	ISSUED FOR PERMIT	T.E.R.	J.L.S.
B	1/31/09	ISSUED FOR CLIENT REVIEW	N.K.	
A	1/9/09	ISSUED FOR INTERNAL REVIEW	N.K.	
REV.	DATE	REVISION	BY	CHKD

PROJECT
FLORIDA FIRST
PROCESSING, INC.

SCALE: NTS

International
WasteEnergy
Systems
ST. LOUIS, MO.

TITLE
ORGANIC TREATMENT
MISC. FOUNDATION SECTIONS & DETAILS

DRAWN	DATE	APPD	DATE	DRAWING NO.	REV.
N.K.	1/6/09				
CHKD	DATE		DATE	8813-00-S-006	D

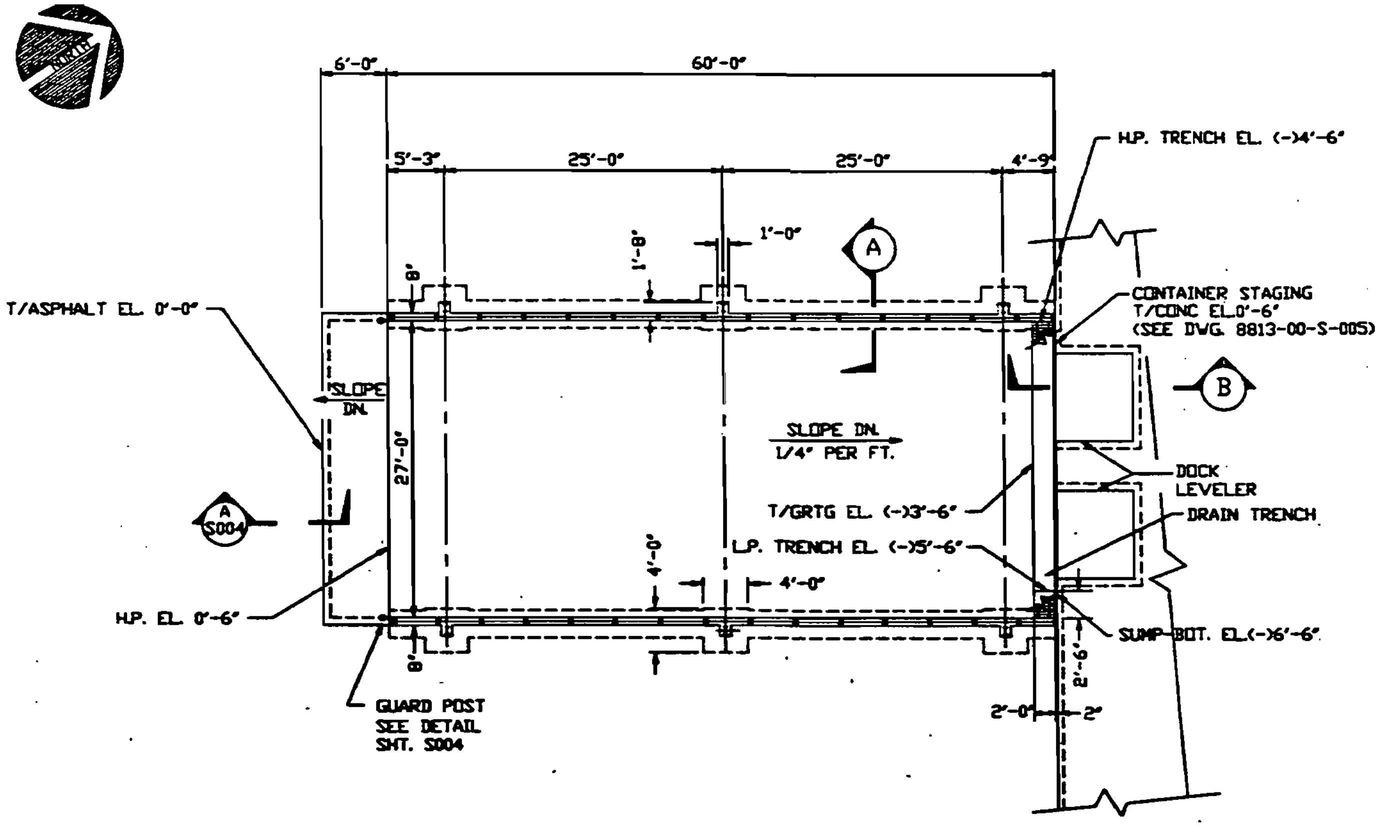

PLAN

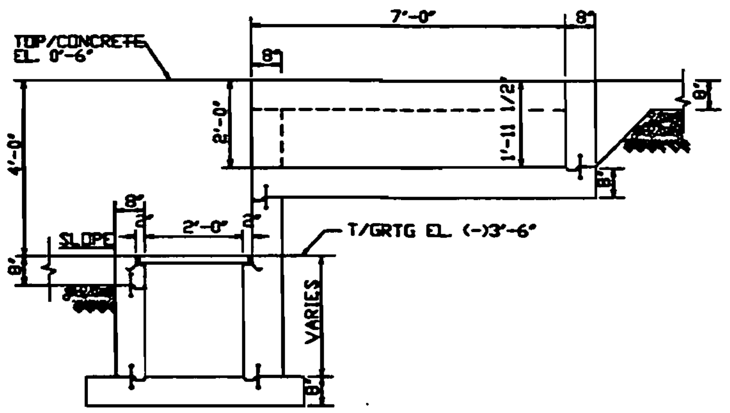

SECTION (B)

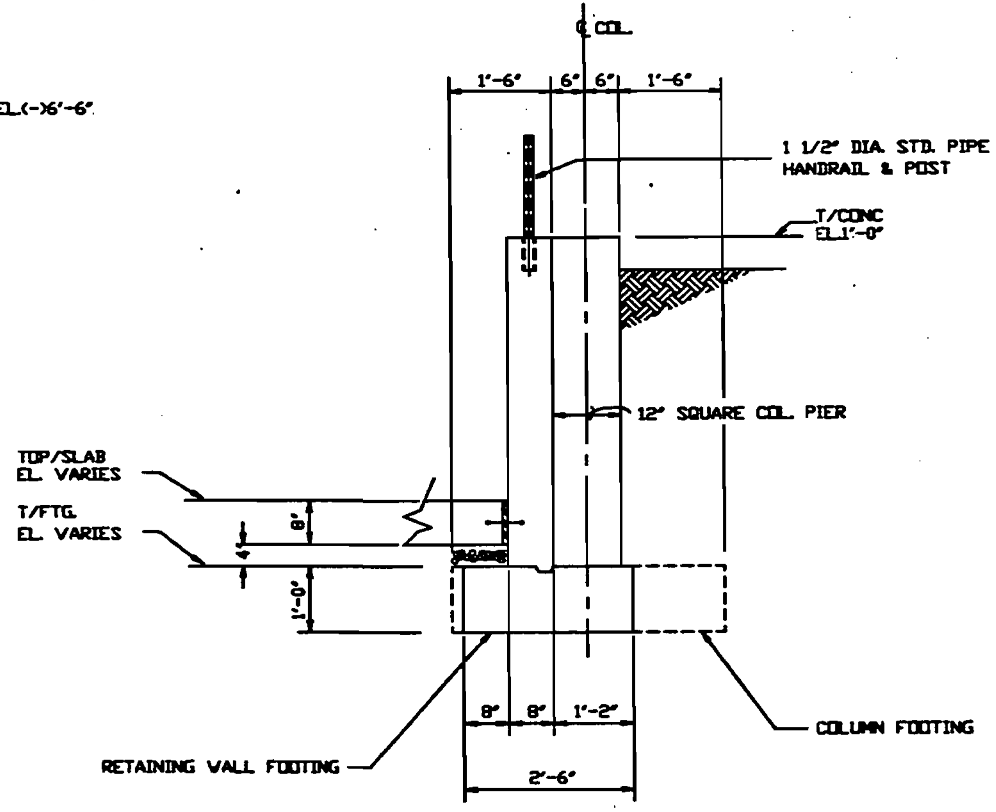

SECTION (C)

NOTES:

1) FOR GENERAL CONCRETE AND FOUNDATION NOTES SEE DRAWING 8813-00-S-001

DICK M. MILLER

REV.	DATE	REVISION	BY	CHKD
E	9/10/90	REVISED & REISSUED FOR PERMIT	R.S.M.	JZS
D	9/28/89	GENERAL REVISION	S.C.M.	J.L.S.
C	4/28/89	ISSUED FOR PERMIT	T.E.R.	J.L.S.
B	3/8/89	ISSUED FOR CLIENT REVIEW	N.K.	J.L.S.
A	1/6/89	ISSUED FOR INTERNAL REVIEW	N.K.	

PROJECT
FLORIDA FIRST
PROCESSING, INC.

SCALE: NTS

International
WasteEnergy
Systems
ST. LOUIS, MO.

TITLE
ORGANIC TREATMENT
CONTAINER TRUCK UNLOADING
FOUNDATION PLAN & SECTIONS

DRAWN	DATE	APPD	DATE	DRAWING NO.	REV.
N.K.	1/5/89			8813-00-S-007	E
CHKD	DATE		DATE		

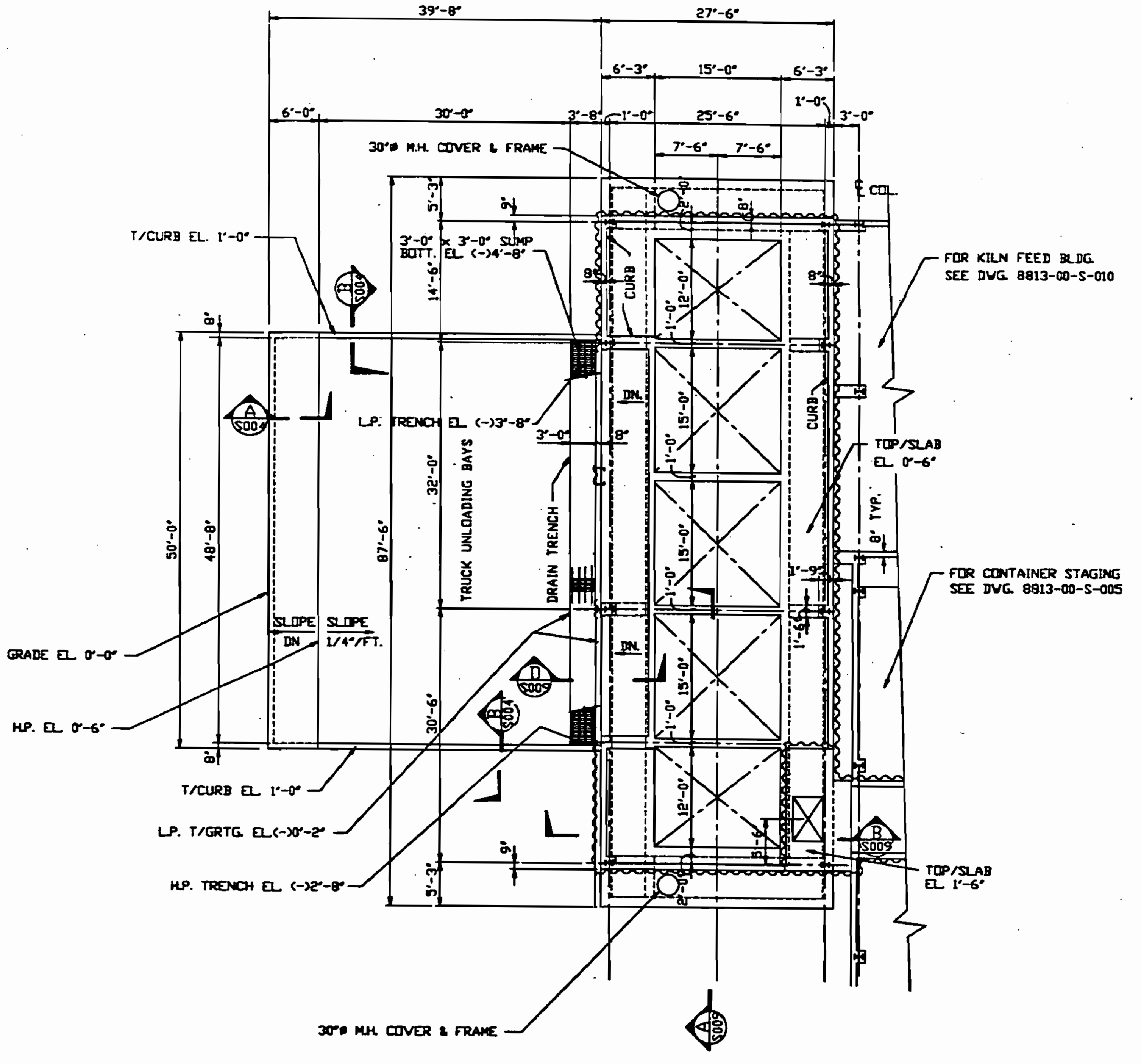

PLAN @ EL. 1'-6"

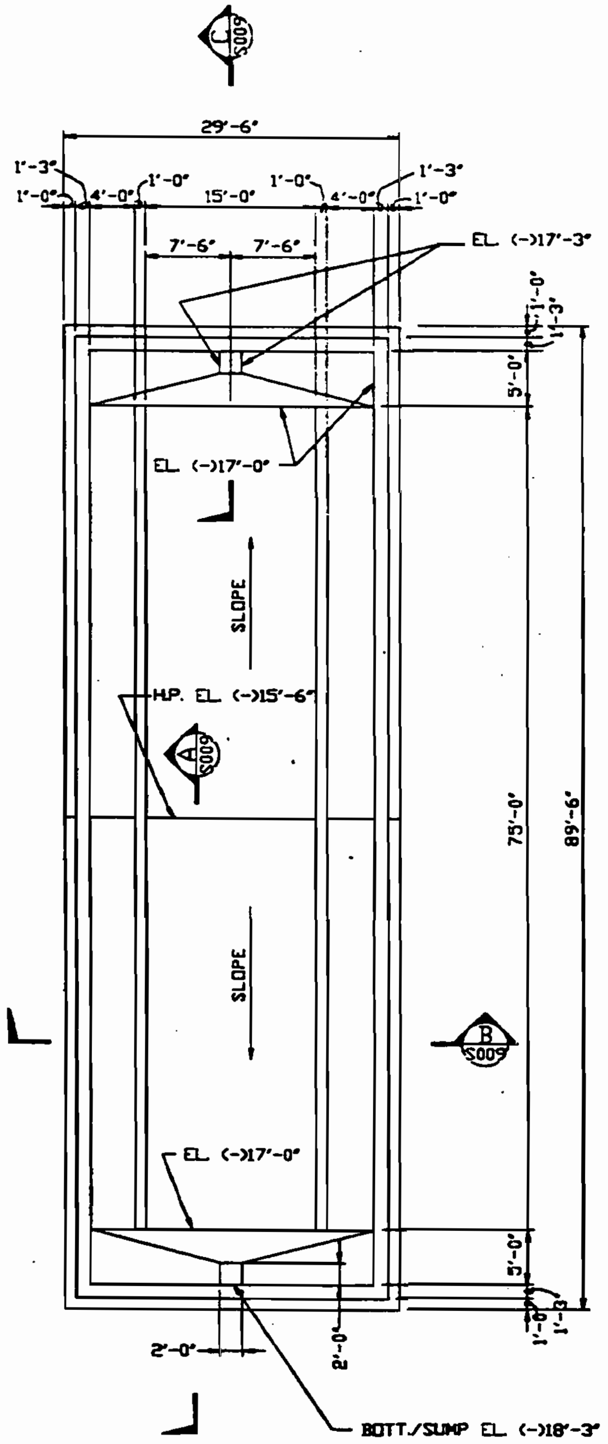

FOUNDATION PLAN

NOTES:

1) FOR GENERAL CONCRETE AND FOUNDATION NOTES SEE DRAWING 8813-00-S-001.

DICK M. MILLER

[illegible]

REV.	DATE	REVISION	BY	CHKD
E	9/21/90	REVISED AND REISSUED FOR PERMIT	R.S.M.	JGS
D	5/01/89	GEN. REVISION & REISSUED FOR PERMIT	T.E.R.	J.L.S.
C	4/28/89	ISSUED FOR PERMIT	T.E.R.	J.L.S.
B	3/8/89	ISSUED FOR CLIENT REVIEW	M.K.	J.L.S.
A	1/12/89	ISSUED FOR INTERNAL REVIEW	M.K.	

PROJECT
FLORIDA FIRST
PROCESSING, INC.

TITLE
ORGANIC TREATMENT
BULK SOLIDS UNLOADING & HANDLING
FOUNDATION PLANS

SCALE: NTS

International
WasteEnergy
Systems
ST. LOUIS, MO.

DRAWN	DATE	APPD	DATE	DRAWING NO.	REV.
M.K.	1/9/89			8813-00-S-008	E
CHKD	DATE		DATE		

8813S008

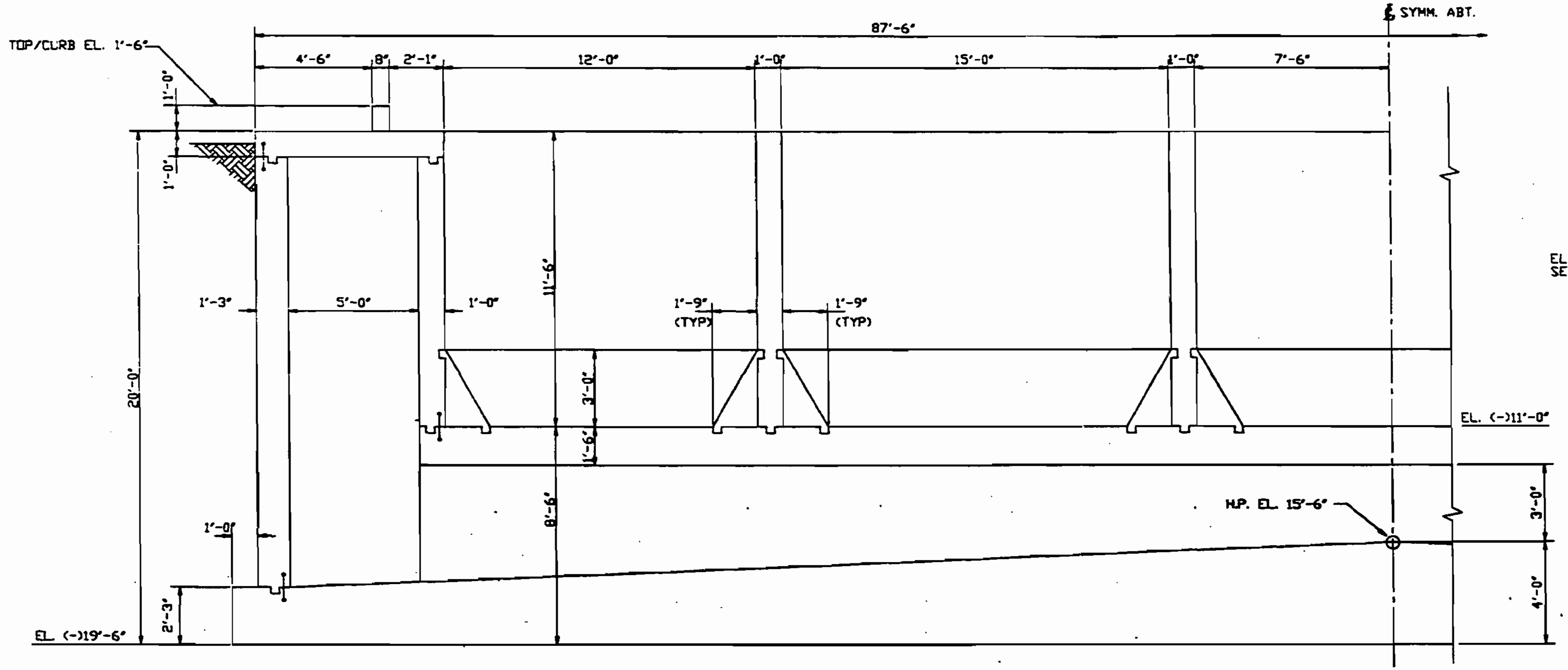

SECTION A
S008

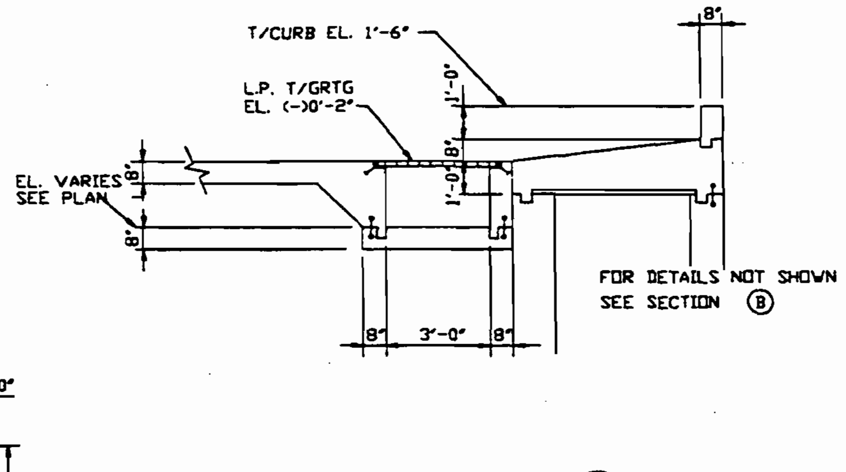

SECTION D
S008

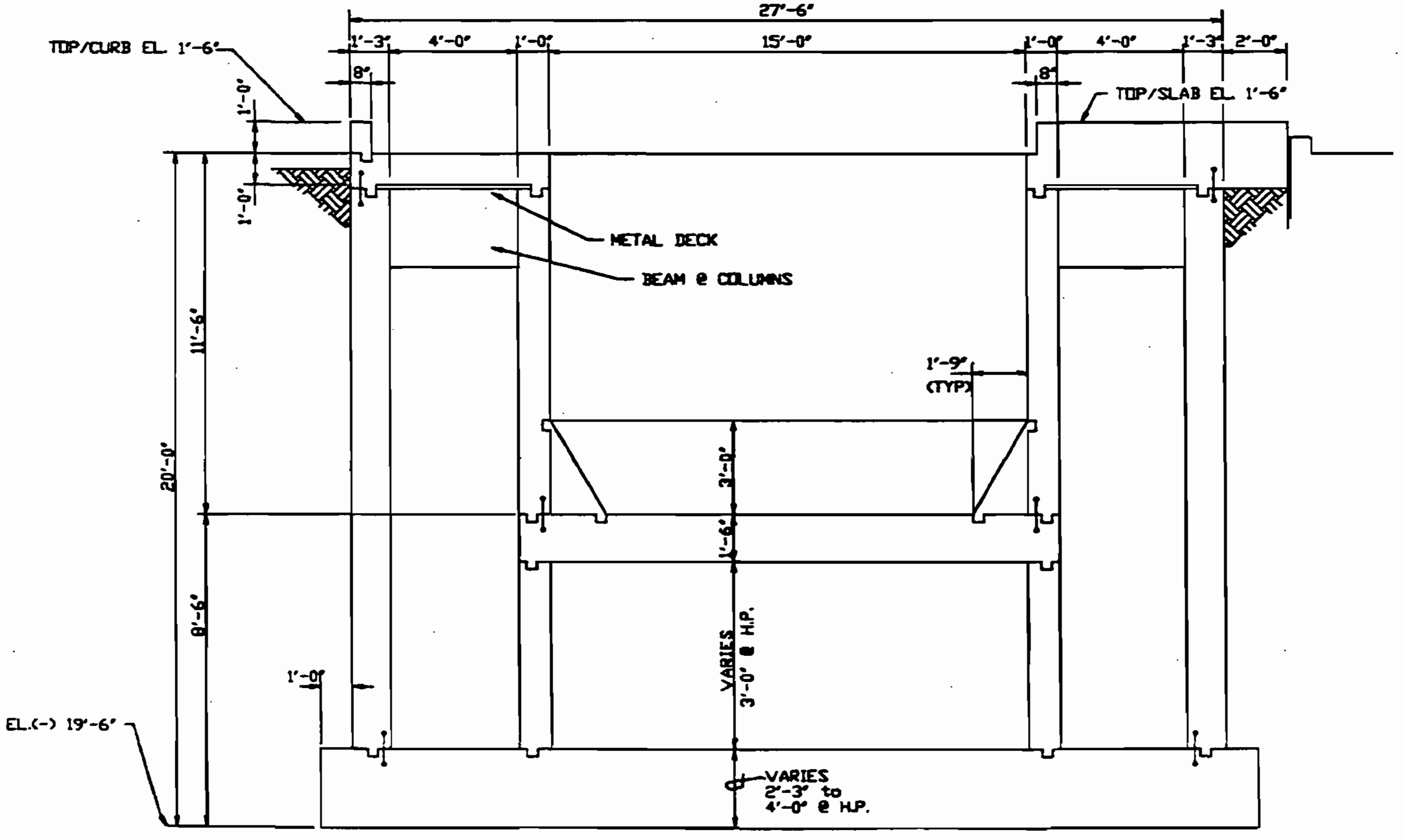

SECTION B
S008

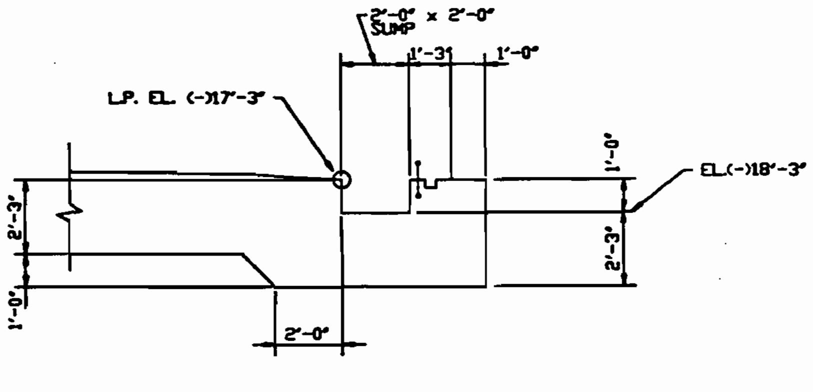

SECTION C
S008

DICK M. MILLER
No. 20027
STATE OF FLORIDA

REV.	DATE	REVISION	BY	CHKD
E	9/21/90	REVISED & REISSUED FOR PERMIT	R.S.M.	JZS
D	5/01/89	GEN. REVISION & REISSUED FOR PERMIT	T.E.R.	J.L.S.
C	4/28/89	ISSUED FOR PERMIT	T.E.R.	J.L.S.
B	2/8/89	ISSUED FOR CLIENT REVIEW	M.K.	
A	01/11/89	ISSUED FOR INTERNAL REVIEW	M.K.	

8813S009

PROJECT

FLORIDA FIRST
PROCESSING, INC.

SCALE: NTS

International
WasteEnergy
Systems
ST. LOUIS, MO.

TITLE

ORGANIC TREATMENT
BULK SOLIDS UNLOADING & HANDLING
FOUNDATION SECTIONS AND DETAILS

DRAWN	DATE	APPD	DATE	DRAWING NO.	REV.
M.K.	1/5/89			8813-00-S-009	E
CHKD	DATE		DATE		

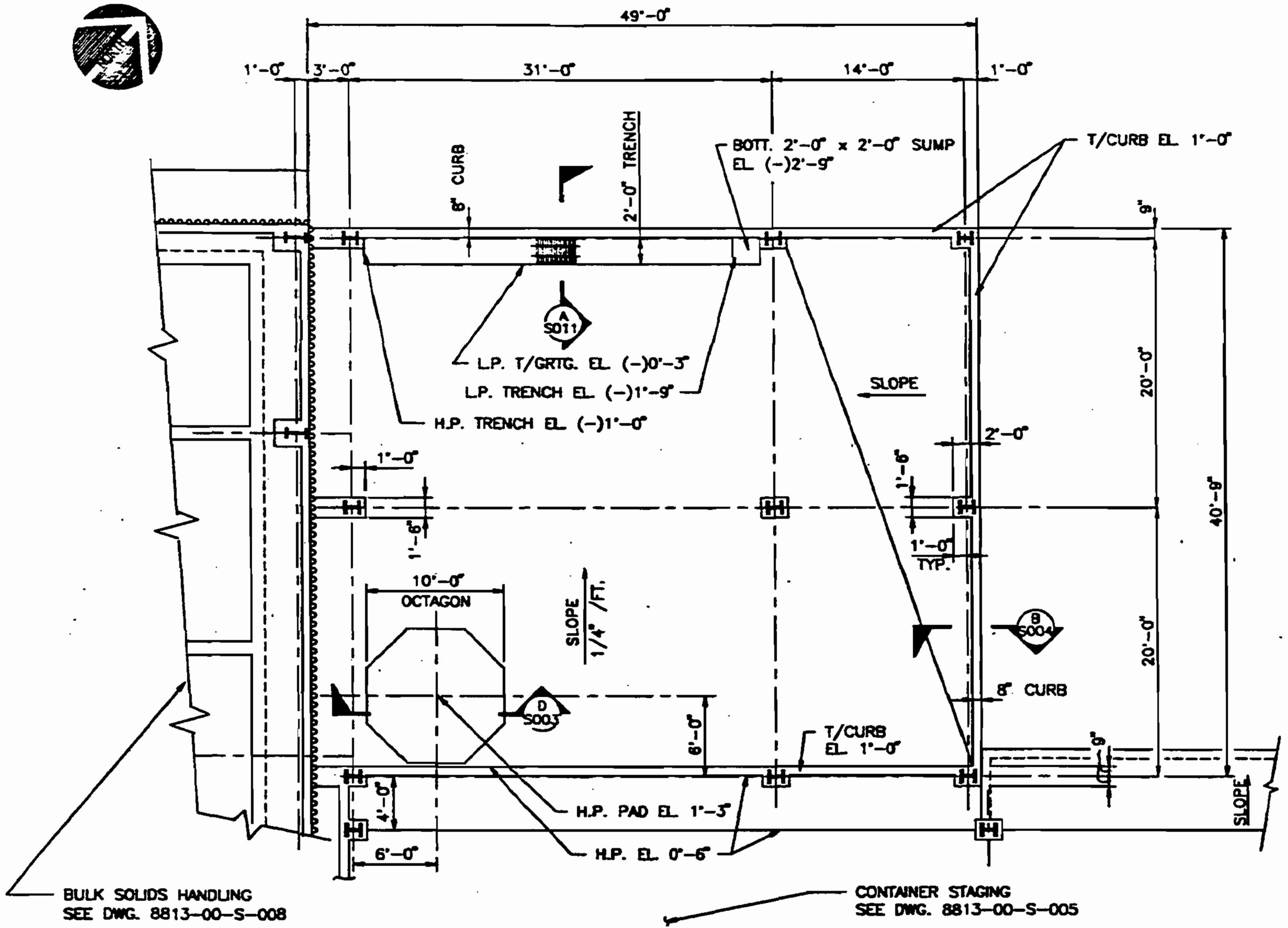

PLAN

NOTES:

1.) FOR GENERAL CONCRETE AND FOUNDATION NOTES SEE DRAWING NO. 8813-00-S-001.

DICK H. MILLER
REGISTERED ENGINEER

This document has been prepared and is approved by me for inclusion in environmental permit applications only. It is neither approved nor is it to be used for [illegible] or [illegible] procurement, construction or any other purpose.

E	9/21/90	REVISED AND REISSUED FOR PERMIT	R.S.M.	JZS
D	5/01/89	GEN. REVISION & REISSUED FOR PERMIT	T.E.R.	J.L.S
C	4/28/89	ISSUED FOR PERMIT	T.E.R.	J.L.S
B	3/8/89	ISSUED FOR CLIENT REVIEW	M.K.	J.L.S
A	1/12/89	ISSUED FOR INTERNAL REVIEW	M.K.	
REV.	DATE	REVISION	BY	CHKD

PROJECT
FLORIDA FIRST
PROCESSING, INC.

SCALE: NTS

International
WasteEnergy
Systems
ST. LOUIS, MO.

TITLE
ORGANIC TREATMENT
KILN FEED
FOUNDATION PLAN

DRAWN	DATE	APPD	DATE	DRAWING NO.	REV.
M.K.	1/10/89				
CHKD	DATE		DATE	8813-00-S-010	E

8813S010

6-2

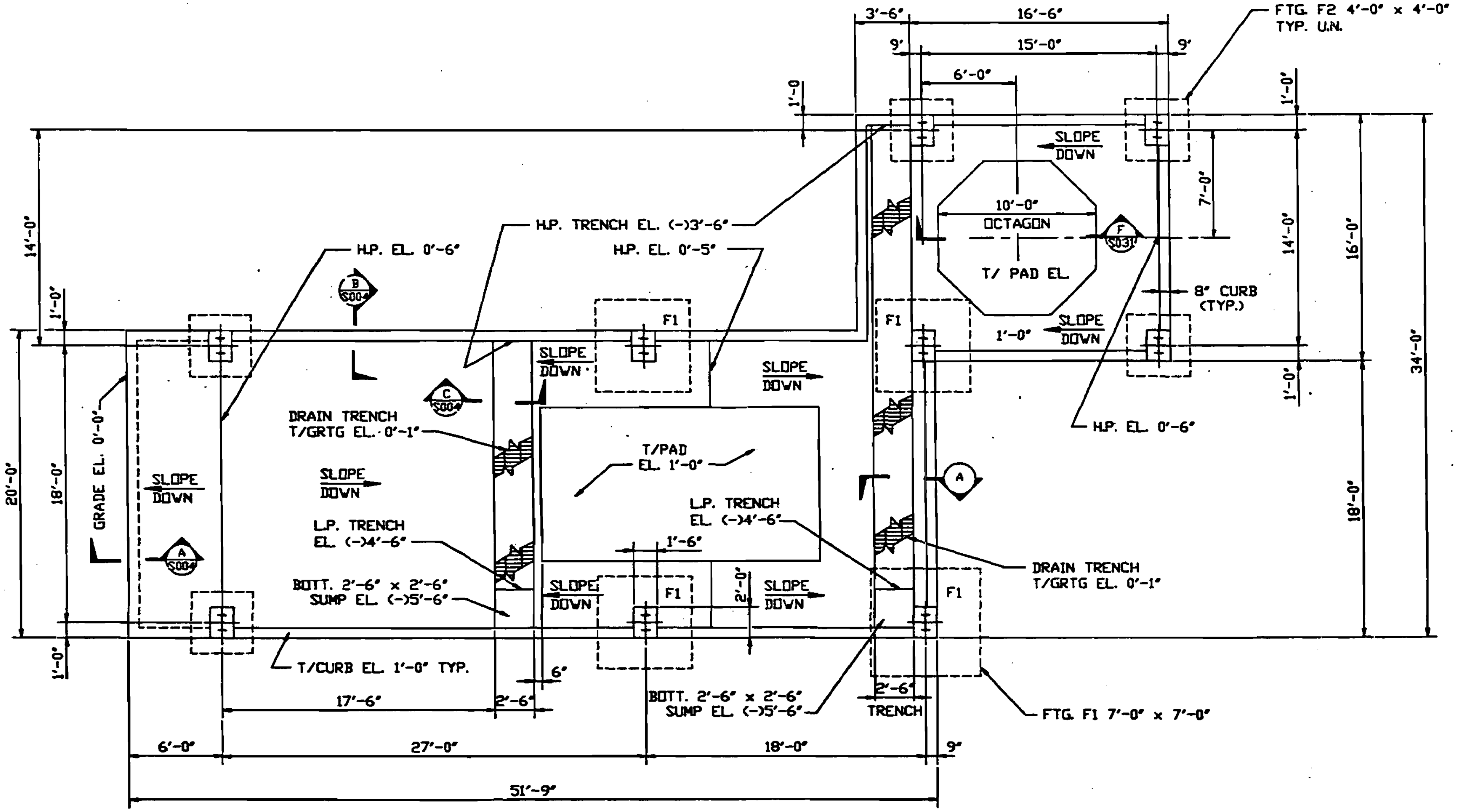

DRIED SOLIDS SYSTEM PLAN

NOTES:

1.) FOR GENERAL CONCRETE AND FOUNDATION NOTES SEE DRAWING NO. 8813-00-S-001.

2.) FOR LOCATION - SEE SITE PLAN DRAWING 8813-00-M-001

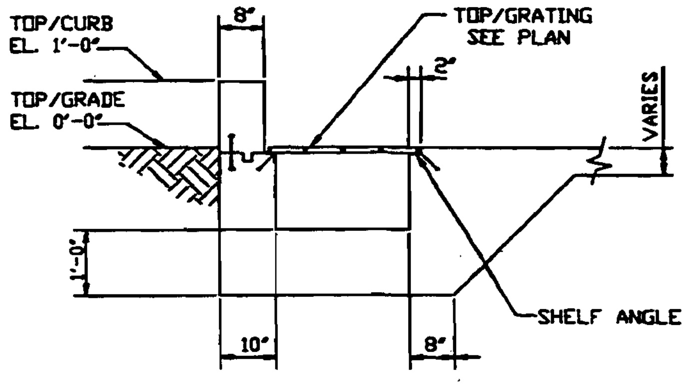

SECTION A
S010, S011, S015

VICK M. MILLER
No. 20077

[illegible]

F	9/21/92	REVISED AND REISSUED FOR PERMIT	R.S.M.	JZS
E	9/20/90	GENERAL REVISION	S.C.H.	R.S.M.
D	5/01/90	GEN. REVISION & REISSUED FOR PERMIT	T.R.	
C	4/28/90	ISSUED FOR PERMIT	M.K.	J.S.
B	2/3/90	ISSUED FOR CLIENT REVIEW	M.K.	
A	1/24/90	ISSUED FOR INTERNAL REVIEW	M.K.	
REV.	DATE	REVISION	BY	CHKD

PROJECT
FLORIDA FIRST
PROCESSING, INC.

SCALE: NTS

International
WasteEnergy
Systems
ST. LOUIS, MO.

TITLE
ORGANIC TREATMENT
DRIED SOLIDS SYSTEM
FOUNDATION PLAN & SECTION

DRAWN	DATE	APPD	DATE	DRAWING NO.	REV.
M.K.	1/10/90				
CHKD	DATE		DATE	8813-00-S-011	F

DATE PLOTTED: 9/18/90 FILE NAME: 8813S011.DWG

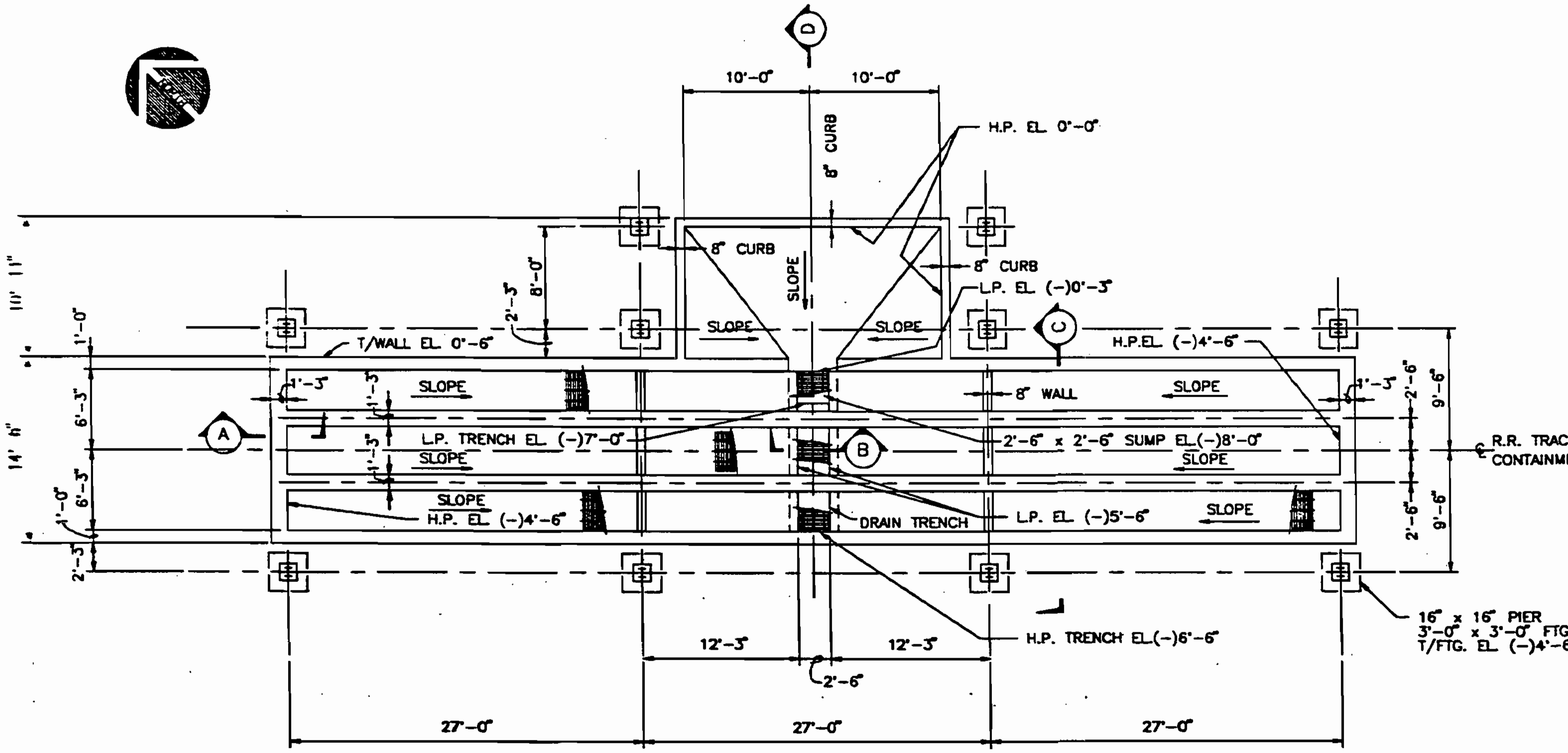

PLAN

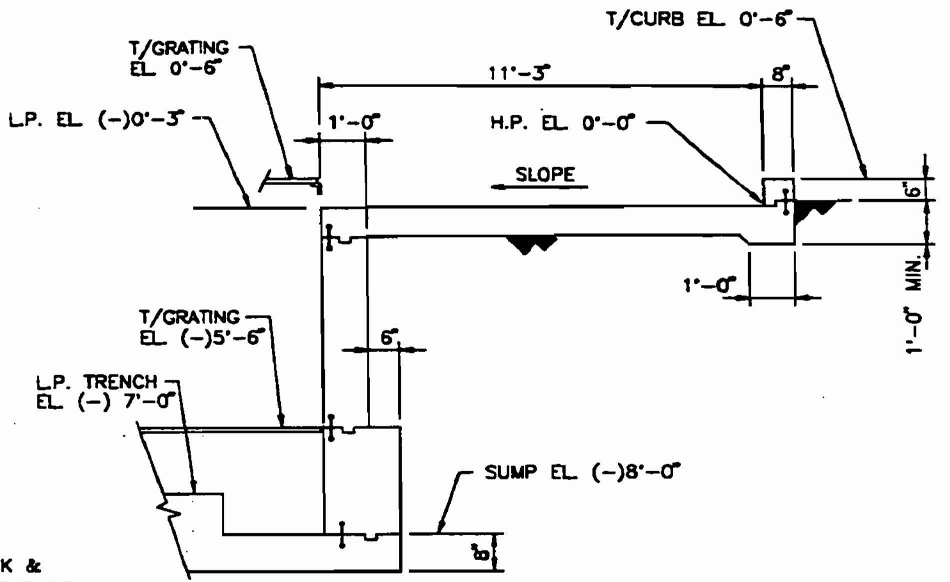

SECTION (D)

NOTES:

1.) FOR GENERAL CONCRETE AND FOUNDATION NOTES SEE DRAWING NO. 8813-00-S-001.

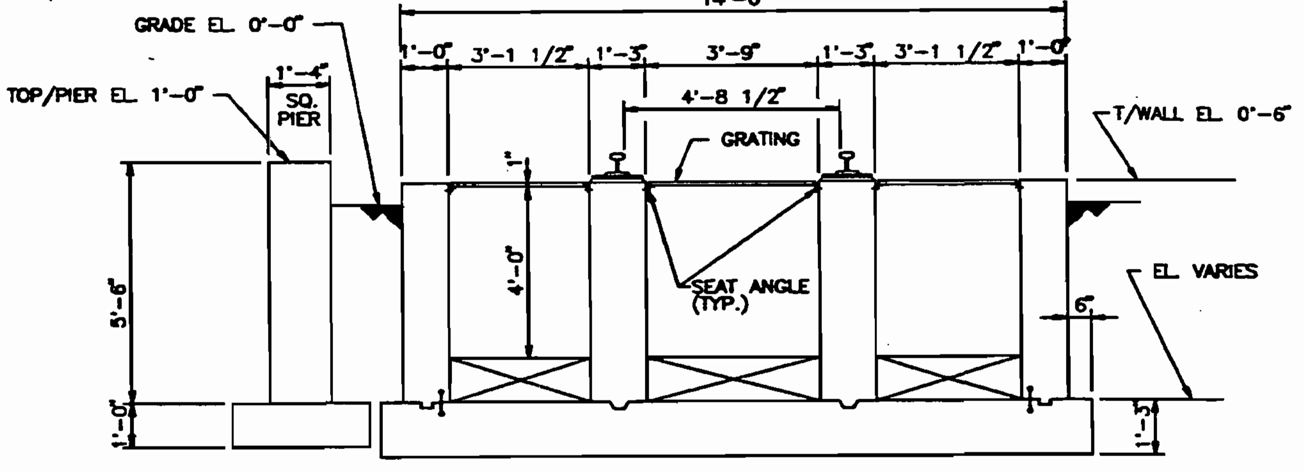

SECTION (C)

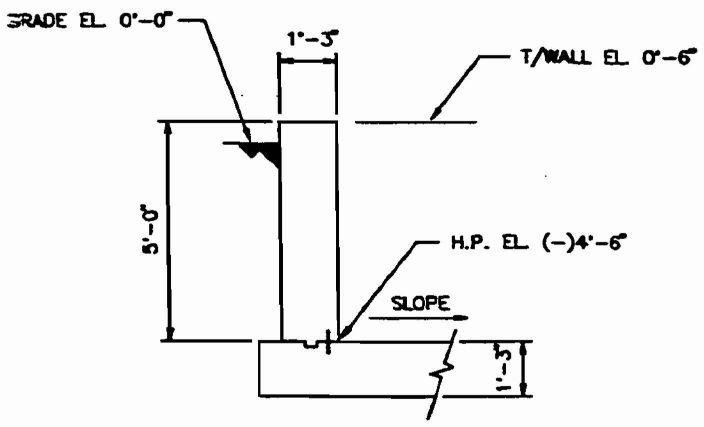

SECTION (A)

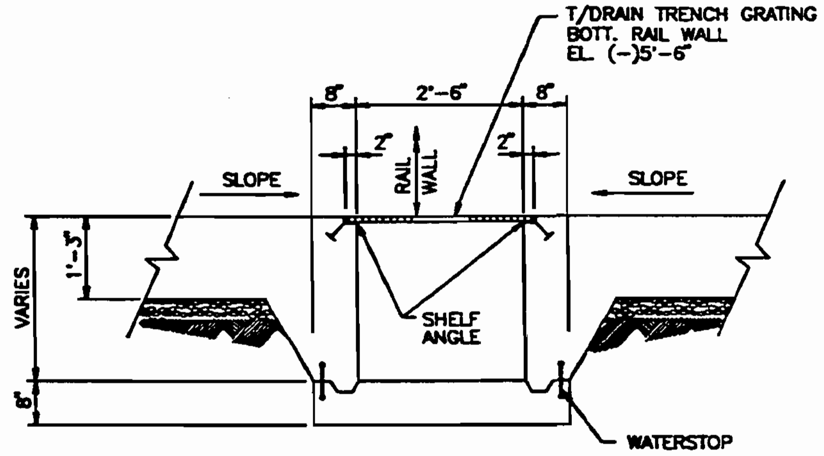

SECTION (B)

NICK M. MILLER
No. 30977

[illegible]

REV.	DATE	REVISION	BY	CHKD
F	9/20/90	REVISED AND REISSUED FOR PERMIT	R.S.M.	JZS
E	9/20/89	GENERAL REVISION	S.C.M.	
D	5/04/89	GENERAL REVISION	T.E.R.	
C	4/28/89	ISSUED FOR PERMIT	T.E.R.	
B	2/3/89	ISSUED FOR CLIENT REVIEW	M.K.	
A	1/16/89	ISSUED FOR INTERNAL REVIEW	M.K.	

SCALE: NTS

International WasteEnergy Systems

ST. LOUIS, MO.

PROJECT

FLORIDA FIRST PROCESSING, INC.

TITLE

RAILROAD TANK CAR UNLOADING FOUNDATION PLAN & SECTIONS

DRAWN	DATE	APPD	DATE	DRAWING NO.	REV.
M.K.	1/11/89			8813-00-S-012	F
CHKD	DATE		DATE		

F-2

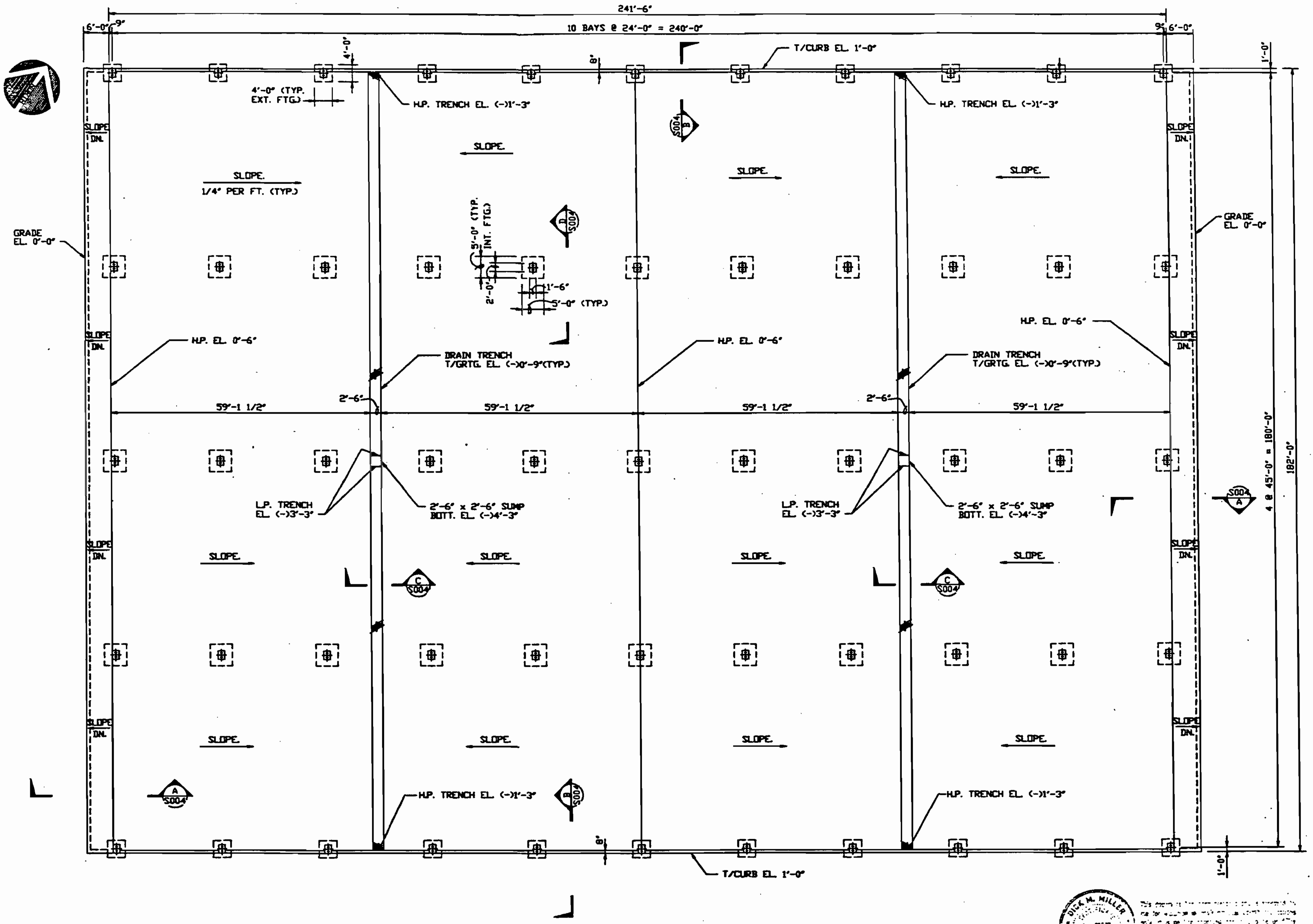

NOTES:

1. FOR GENERAL CONCRETE AND FOUNDATION NOTES SEE DWG. 8813-00-S-001.

DICK M. MILLER

Rick M. Miller

REV.	DATE	REVISION	BY	CHKD
D	9/21/94	REVISED AND REISSUED FOR PERMIT	R.S.M.	JCS
C	5/01/89	GEN. REVISION & REISSUED FOR PERMIT	T.E.R.	
B	4/26/89	ISSUED FOR PERMIT	L.C.D.	
A	4/20/89	ISSUED FOR INTERNAL REVIEW	M.K.	

PROJECT

FLORIDA FIRST
PROCESSING, INC.

SCALE: N.T.S.

International
WasteEnergy
Systems

ST. LOUIS, MO.

TITLE

RESIDUE STORAGE
FOUNDATION PLAN

DRAWN	DATE 4/19/89	APPD	DATE	DRAWING NO.	REV.
CHKD	DATE		DATE	8813-00-S-013	D

FILE NAME: \8813\8813S013.DWG

D-1

GENERAL CIVIL NOTES

1. Vitrified clay pipe (VCP) shall conform to ASTM C-700.
2. All VCP sewer joints are to be ASTM C-425.
3. Cast iron pipe (CIP) fittings shall conform to ASTM-74.
4. All concrete pipe shall conform to ASTM C76.
5. All sewers to have class "B" bedding unless noted.
6. The pipe shall be bedded in angular bedding material conforming to ASTM D 448 "Standard sizes of coarse aggregates for highway construction" Size #67.
7. All concrete to have a minimum compressive strength of 3000 psi at 28 days.
8. All catch basins shall be provided with oil skimmers.

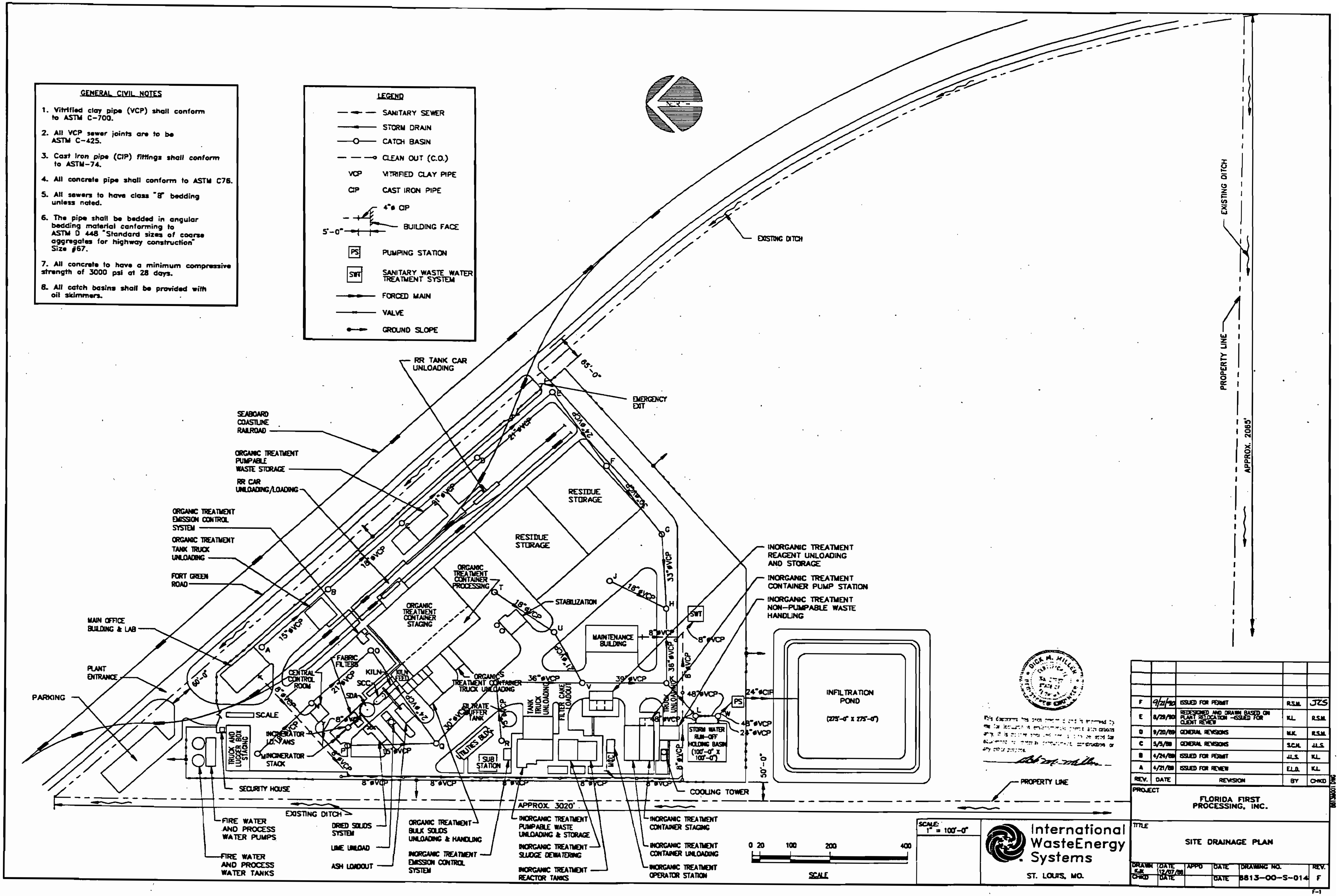

DICK M. MILLER

This document has been prepared [illegible] and is intended by me for inclusion in environmental permit applications only. It is [illegible] be used for [illegible] construction or any other purpose.

REV.	DATE	REVISION	BY	CHKD
F	9/21/90	ISSUED FOR PERMIT	R.S.M.	JZS
E	8/29/90	REDESIGNED AND DRAWN BASED ON PLANT RELOCATION -ISSUED FOR CLIENT REVIEW	K.L.	R.S.M.
D	9/20/89	GENERAL REVISIONS	M.K.	R.S.M.
C	5/5/89	GENERAL REVISIONS	S.C.H.	J.L.S.
B	4/24/89	ISSUED FOR PERMIT	J.L.S.	K.L.
A	4/21/89	ISSUED FOR REVIEW	E.L.D.	K.L.

8813M001.DWG

SCALE: 1" = 100'-0"

International WasteEnergy Systems
ST. LOUIS, MO.

PROJECT
FLORIDA FIRST PROCESSING, INC.

TITLE
SITE DRAINAGE PLAN

DRAWN	DATE	APPD	DATE	DRAWING NO.	REV.
KJK	12/07/88				
CHKD	DATE		DATE	8813-00-S-014	F

F-1

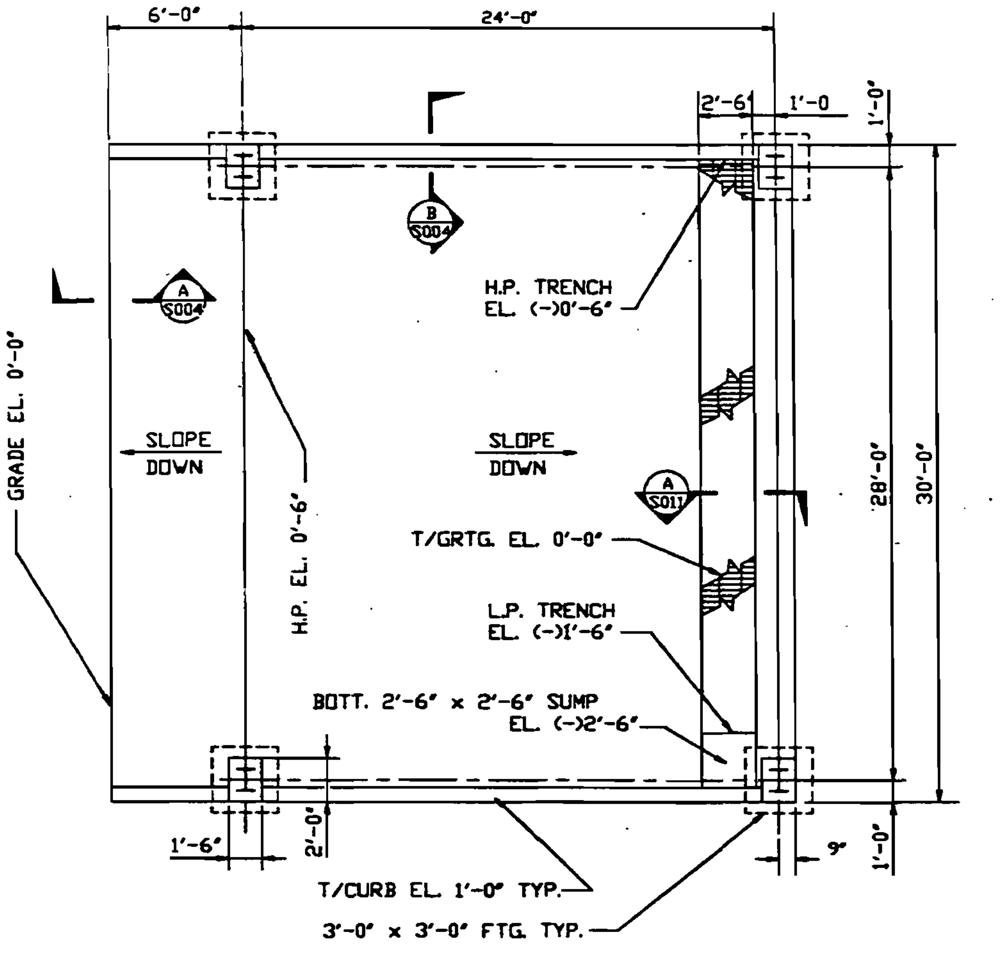

ASH LOADOUT PLAN

NOTES:

1.) FOR GENERAL CONCRETE AND FOUNDATION NOTES SEE DRAWING NO. 8813-00-S-001.

2.) FOR LOCATION - SEE SITE PLAN DRAWING 8813-00-M-001 & M-019.

DICK M. MILLER

[illegible]

REV.	DATE	REVISION	BY	CHKD
C	9/21/00	REVISED AND REISSUED FOR PERMIT	R.S.M.	SCS
B	4/28/00	ISSUED FOR PERMIT	M.K.	J.L.S.
A	2/3/00	ISSUED FOR CLIENT REVIEW	M.K.	

PROJECT
FLORIDA FIRST
PROCESSING, INC.

SCALE: NTS

International
WasteEnergy
Systems
ST. LOUIS, MO.

TITLE
ORGANIC TREATMENT
ASH LOADOUT
FOUNDATION PLAN

DRAWN	DATE	APPD	DATE	DRAWING NO.	REV.
M.K.	1/10/00				
CHKD	DATE		DATE	8813-00-S-015	C

FILE NAME: 8813S015.DWG

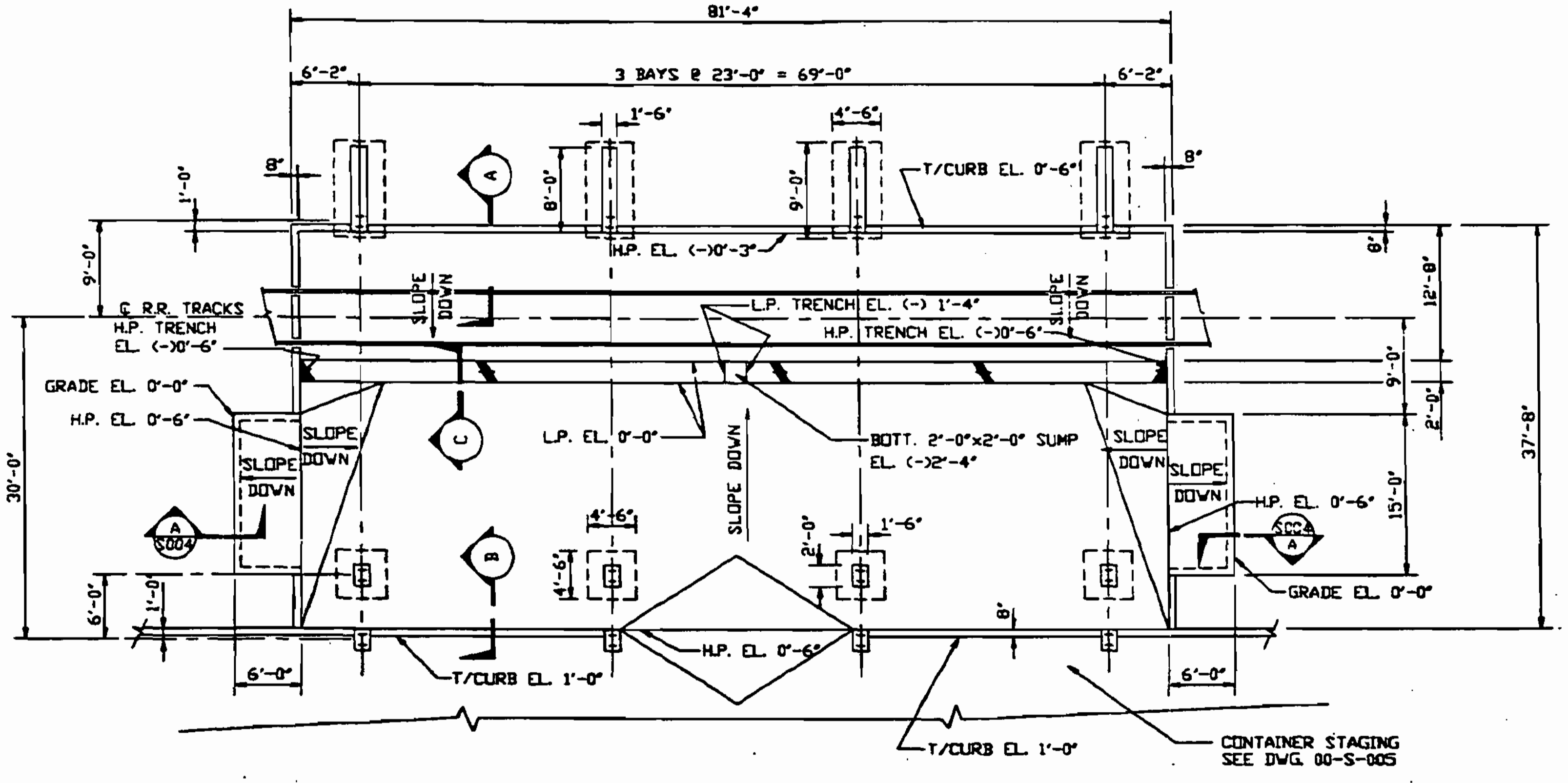

PLAN

NOTES:

1. FOR GENERAL CONCRETE AND FOUNDATION NOTES SEE DRAWING No. 8813-00-S-001.

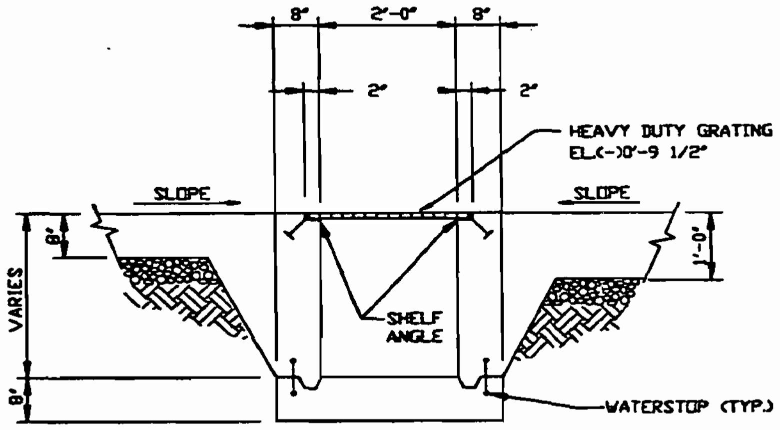

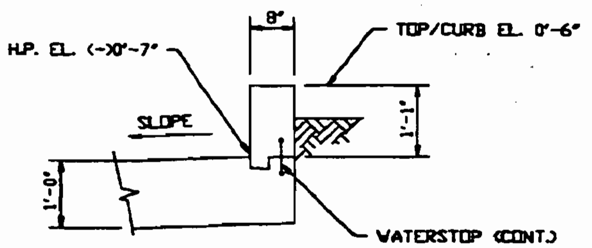

SECTION Ⓐ

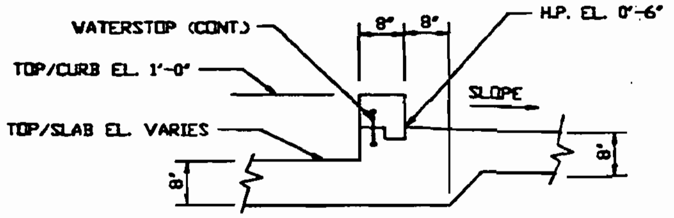

SECTION Ⓑ

SECTION Ⓒ

DICK M. MILLER No. 20377

REV.	DATE	REVISION	BY	CHKD
D	9/21/90	REVISED AND REISSUED FOR PERMIT	R.S.M.	JCS
C	5/01/89	CIVIL REVISION & REISSUED FOR PERMIT	T.E.R.	J.L.S.
B	4/26/89	ISSUED FOR PERMIT	L.C.D.	
A	4/25/89	ISSUED FOR INTERNAL REVIEW	M.K.	

PROJECT
FLORIDA FIRST
PROCESSING, INC.

SCALE: NTS

International
WasteEnergy
Systems
ST. LOUIS, MO.

TITLE
R.R. CAR LOADING/UNLOADING
FOUNDATION PLAN AND SECTIONS

DRAWN	DATE	APPD	DATE	DRAWING NO.	REV.
M.K.	4/25/89			8813-00-S-016	D
CHKD	DATE		DATE		

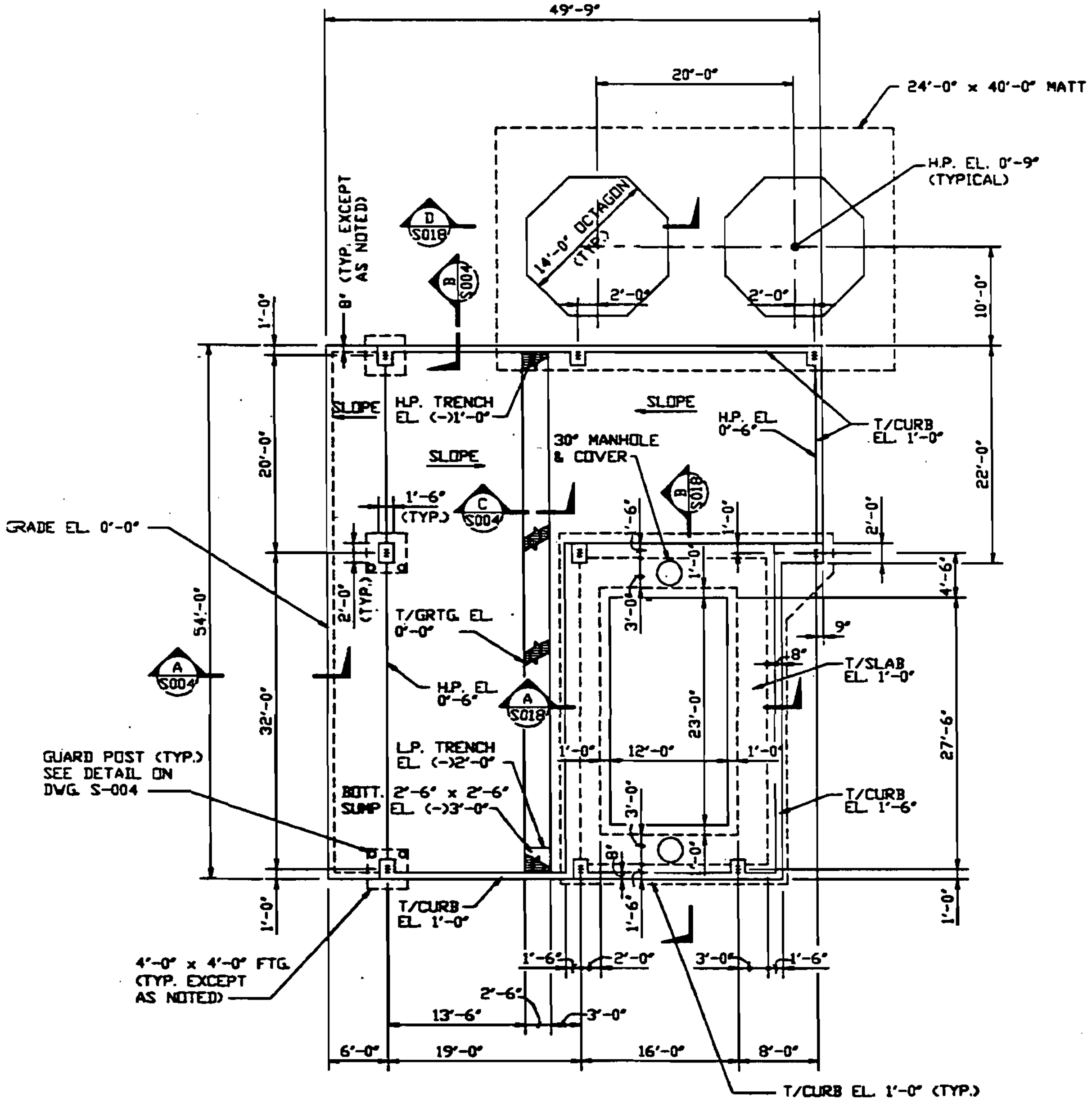

PLAN

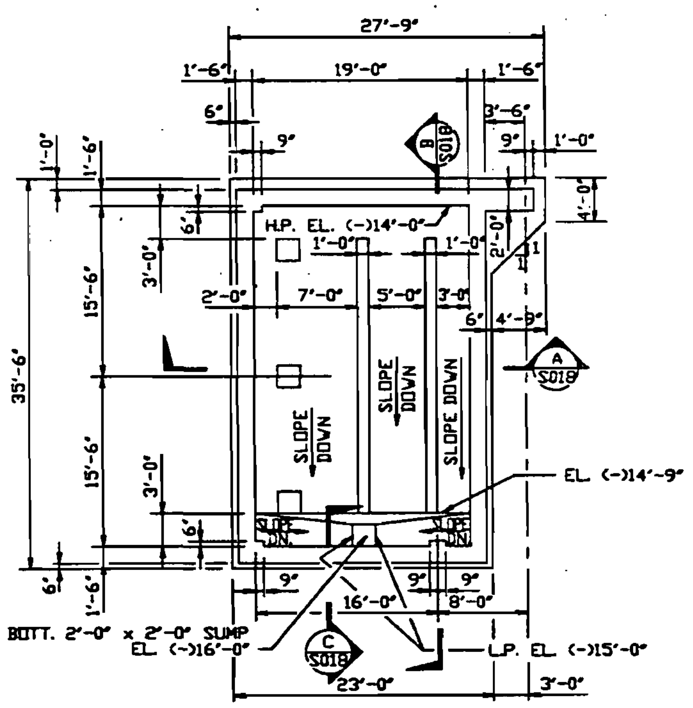

BASE PLAN

(WASTE RECEIVING BIN)

NOTES:

1. FOR GENERAL CONCRETE AND FOUNDATION NOTES SEE DWG. No. 8813-00-S-001.

DICK M. MILLER

REV.	DATE	REVISION	BY	CHKD
C	9/21/88	REVISED AND REISSUED FOR PERMIT	R.S.M.	JZS
B	5/05/88	ISSUED FOR PERMIT	M.K.	J.L.S.
A	5/1/88	ISSUED FOR INTERNAL REVIEW	M.K.	

PROJECT
FLORIDA FIRST
PROCESSING, INC.

SCALE: NTS

International
WasteEnergy
Systems
ST. LOUIS, MO.

TITLE
STABILIZATION
FOUNDATION PLANS

DRAWN	DATE	APPD	DATE	DRAWING NO.	REV.
M.K.	5/2/88				
CHKD	DATE		DATE	8813-00-S-017	C

FILE NAME: \8813\8813S017.DWG

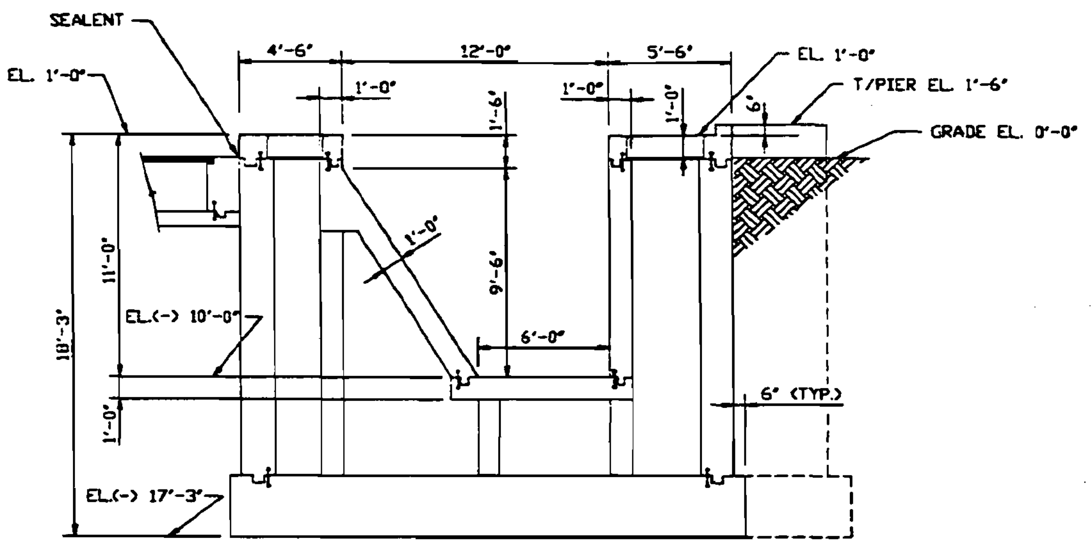

SECTION A
S-017

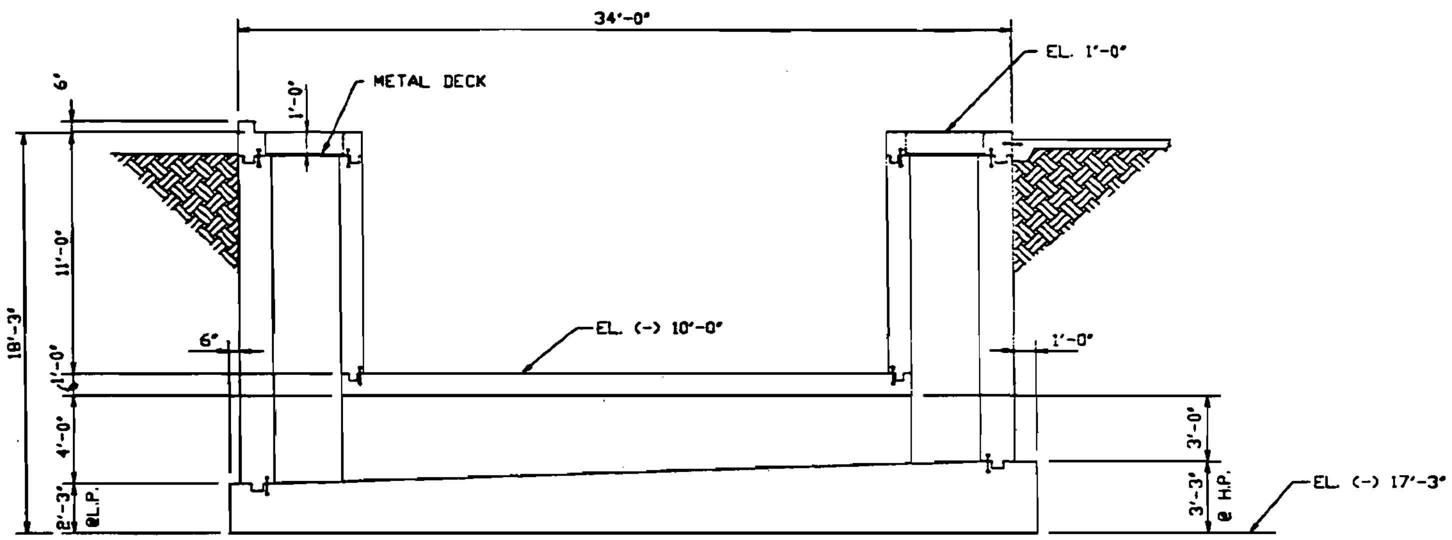

SECTION B
S-017

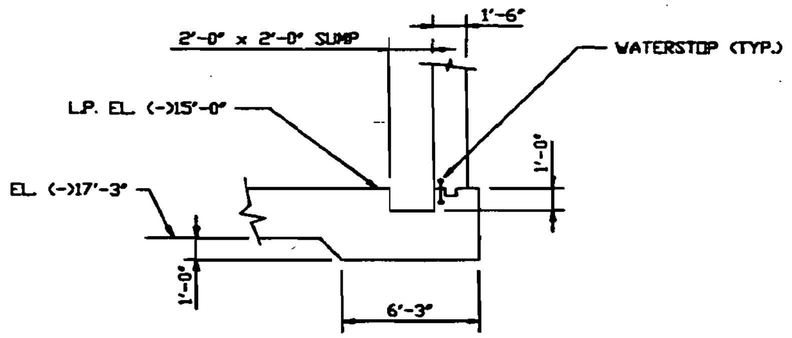

SECTION C
S-017

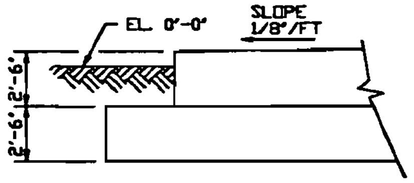

SECTION D
S-017

DICK M. MILLER

This document has [illegible] any other purpose.

REV.	DATE	REVISION	BY	CHKD
C	9/21/90	REVISED AND REISSUED FOR PERMIT	R.S.M.	JZS
B	5/05/88	ISSUED FOR PERMIT	M.K.	J.S.L.
A	5/1/88	ISSUED FOR INTERNAL REVIEW	M.K.	

PROJECT

FLORIDA FIRST
PROCESSING, INC.

TITLE

STABILIZATION
FOUNDATION SECTIONS AND DETAILS

SCALE: NTS

International
WasteEnergy
Systems

ST. LOUIS, MO.

DRAWN	DATE	APPD	DATE	DRAWING NO.	REV.
M.K.	5/3/88			8813-00-S-018	C
CHKD	DATE		DATE		

FILE NAME: \8813\8813S018.DWG

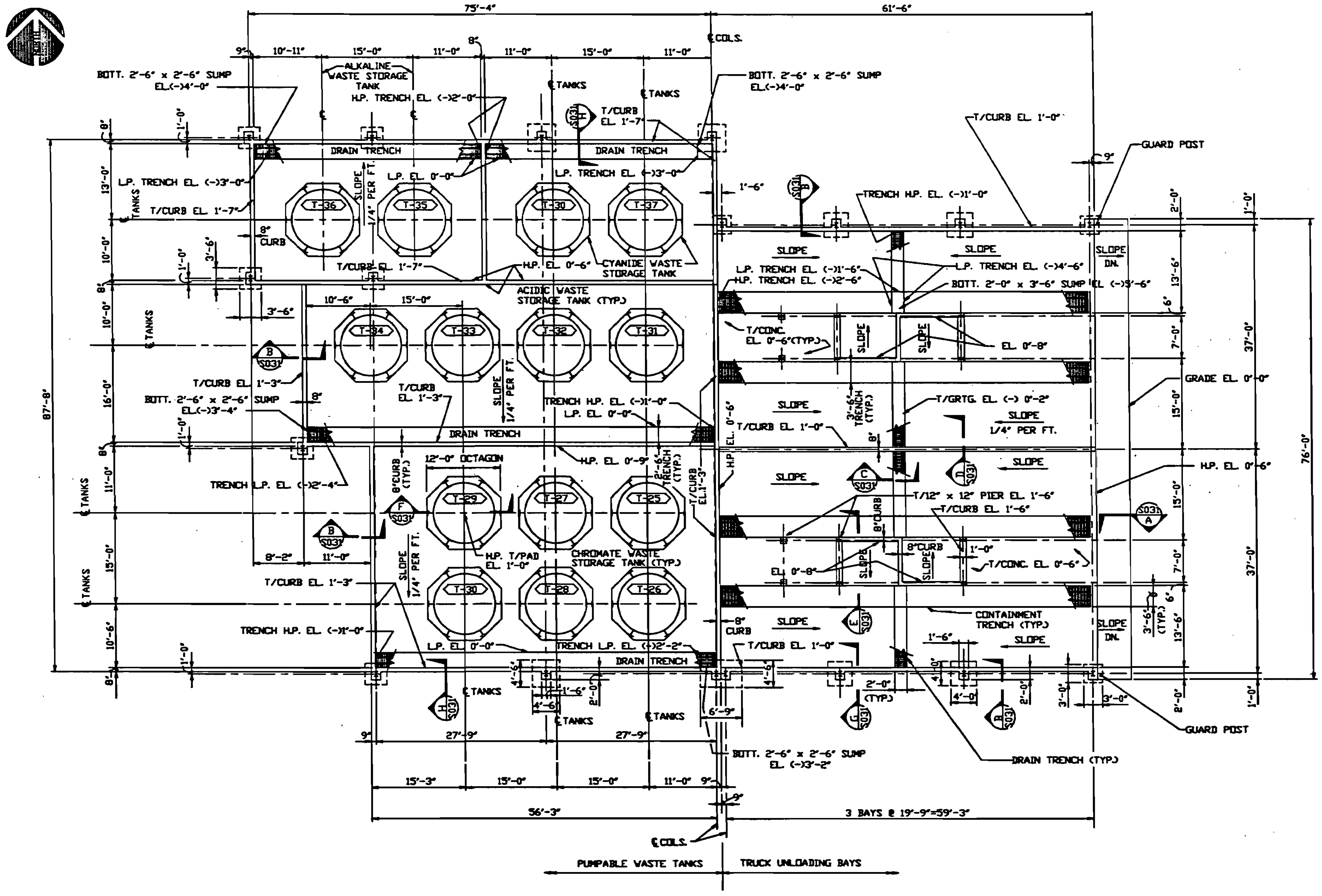

PLAN

NOTES:

1.) FOR GENERAL CONCRETE AND FOUNDATION NOTES SEE DRAWING 8813-00-S-001.

DICK M. MILLER

This document has been prepared and is [illegible]

F	9/21/90	REVISED AND REISSUED FOR PERMIT	J.D.R.	JLS
E	9/20/89	GENERAL REVISION	S.C.H.	R.S.M.
D	5/01/89	GEN. REVISION & REISSUED FOR PERMIT	L.C.D.	
C	4/28/89	ISSUED FOR PERMIT	T.E.R.	J.L.S.
B	3/8/89	ISSUED FOR CLIENT REVIEW	M.K.	J.L.S.
A	1/16/89	ISSUED FOR INTERNAL REVIEW	M.K.	
REV.	DATE	REVISION	BY	CHKD

PROJECT
FLORIDA FIRST
PROCESSING, INC.

SCALE: NTS

International
WasteEnergy
Systems
ST. LOUIS, MO.

TITLE
INORGANIC TREATMENT
PUMPABLE WASTE UNLOADING &
STORAGE
FOUNDATION PLAN

DRAWN	DATE	APPD	DATE	DRAWING NO.	REV.
M.K.	1/13/89			8813-00-S-030	F
CHKD	DATE		DATE		

881350.19

DATE PLOTTED 9/18/90

F-2

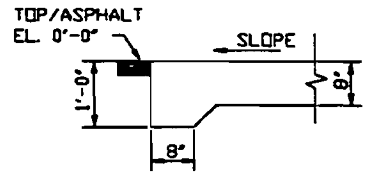

SECTION (A) S030, S032, S034, S036

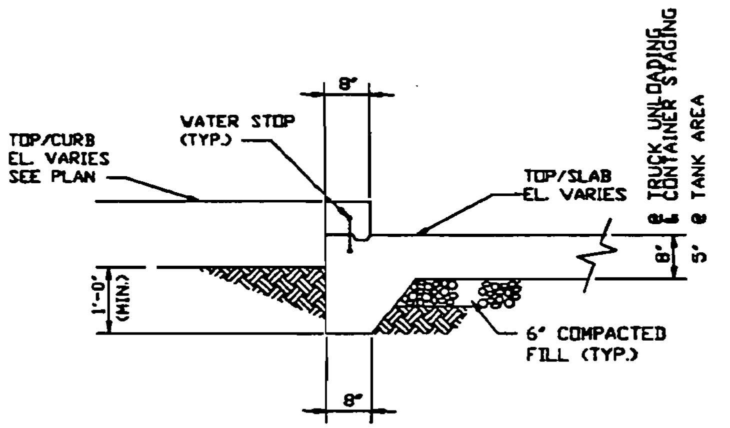

SECTION (B) S030

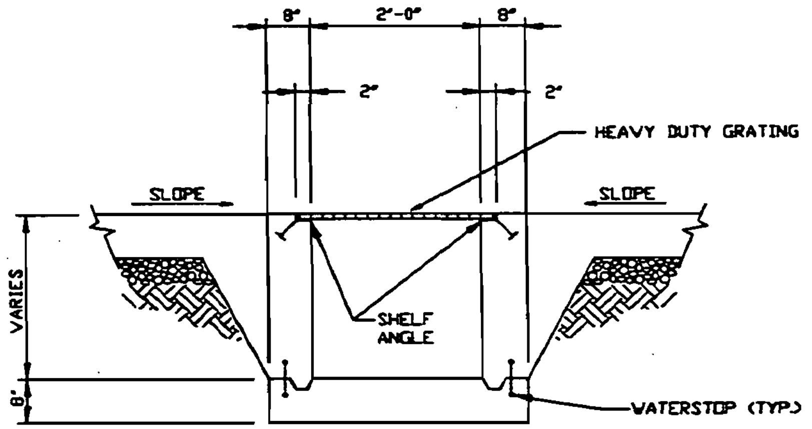

SECTION (C) S030

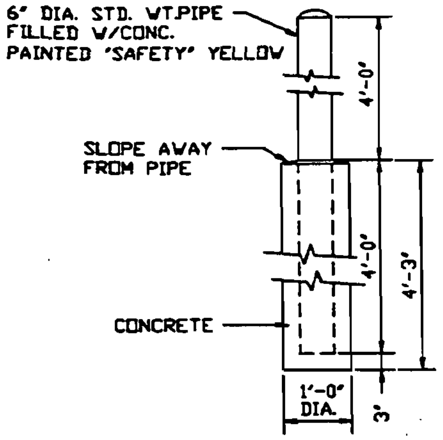

TYPICAL GUARD POST DETAIL

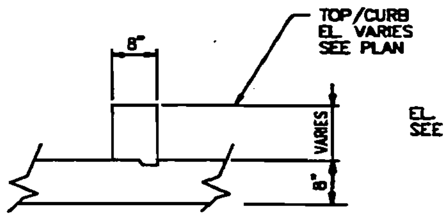

SECTION (D) S030

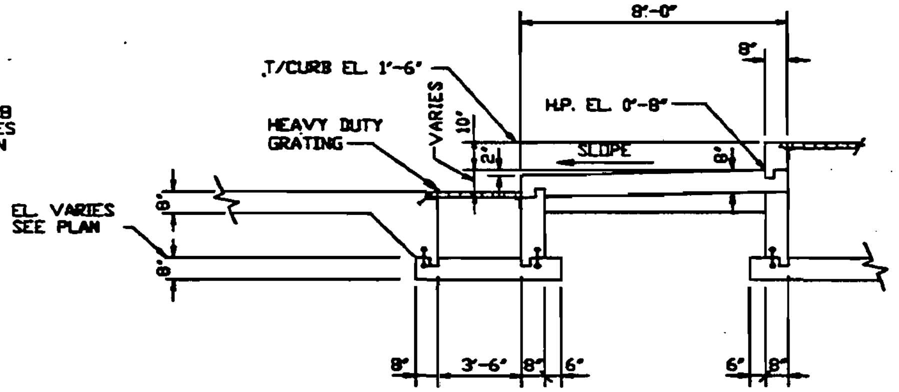

SECTION (E) S030

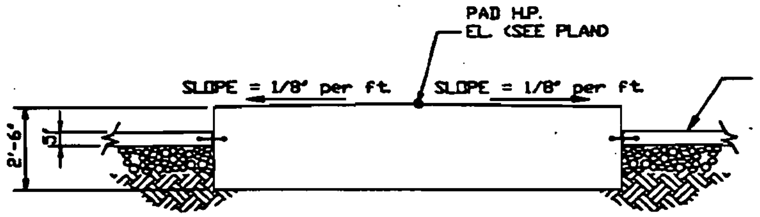

SECTION (F) S030, S032, S036

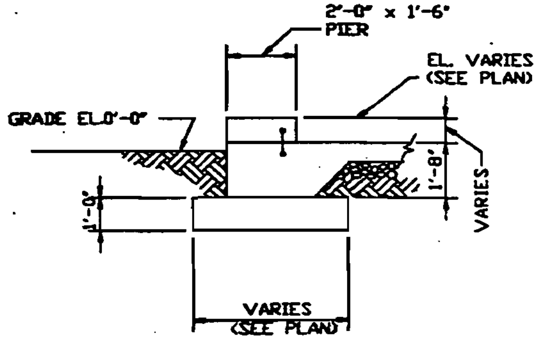

SECTION (G) S030, S036

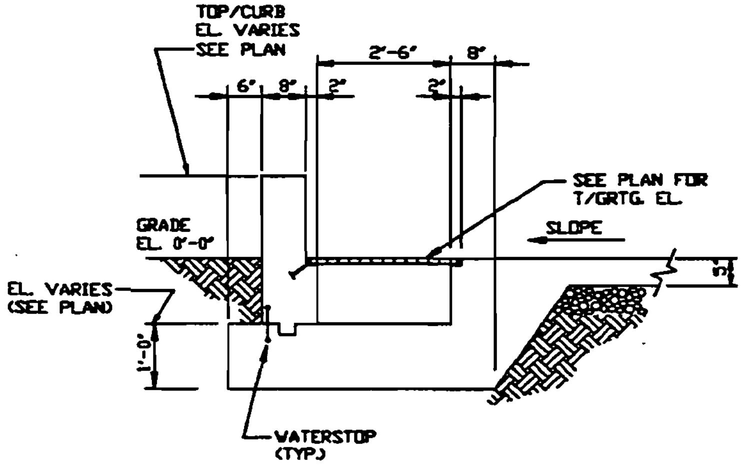

SECTION (H) S030

DILA M. MILLER

REV.	DATE	REVISION	BY	CHKD
E	9/21/00	REVISED AND REISSUED FOR PERMIT	R.S.M.	JLS
D	5/01/00	GEN. REVISION & REISSUED FOR PERMIT	L.C.D.	J.L.S.
C	4/28/00	ISSUED FOR PERMIT	T.E.R.	J.L.S.
B	2/28/00	ISSUED FOR CLIENT REVIEW	M.J.A.	
A	1/13/00	ISSUED FOR INTERNAL REVIEW	M.J.A.	

PROJECT
FLORIDA FIRST
PROCESSING, INC.

SCALE: NTS

International WasteEnergy Systems
ST. LOUIS, MO.

TITLE
INORGANIC TREATMENT
PUMPABLE WASTE UNLOADING & STORAGE
FOUNDATION SECTIONS AND DETAILS

DRAWN	DATE	APPD	DATE	DRAWING NO.	REV.
M.J.A.	1/12/00			8813-00-S-031	E
CHKD	DATE		DATE		

8813S031

E-1

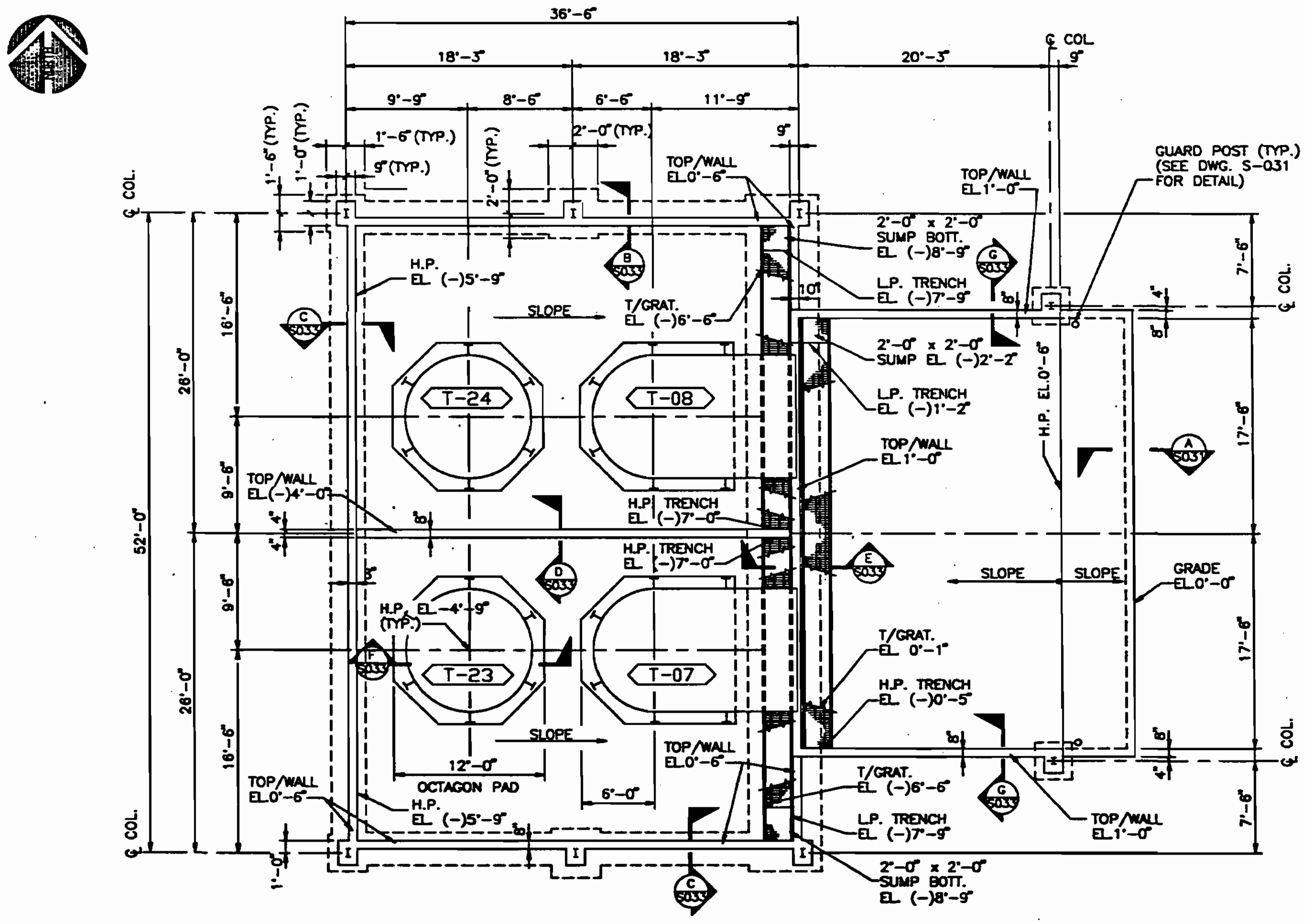

PLAN

TANK ITEM NO.	DESCRIPTION
T-07	ALKALINE/CYANIDE WASTE DISSOLVING TANK
T-08	ACIDIC/CHROMATE WASTE DISSOLVING TANK
T-23	DISSOLVED ALKALINE/CYANIDE WASTE HOLDING TANK
T-24	DISSOLVED ACIDIC/CHROMATE WASTE HOLDING TANK

NOTES:

1.) FOR GENERAL CONCRETE AND FOUNDATION NOTES SEE DRAWING NO. 8813-00-S-001.

DICK M. MILLER

F	9/21/90	REVISED AND REISSUED FOR PERMIT	R.S.M.	JZS
E	9/20/89	GENERAL REVISION	S.C.M.	R.S.M.
D	5/01/89	GEN. REVISION & REISSUED FOR PERMIT	L.C.O.	
C	4/28/89	ISSUED FOR PERMIT	T.E.R.	J.L.S.
B	3/8/89	ISSUED FOR CLIENT REVIEW	M.J.A.	J.L.S.
A	1/16/89	ISSUED FOR INTERNAL REVIEW	M.J.A.	
REV.	DATE	REVISION	BY	CHKD

PROJECT
FLORIDA FIRST
PROCESSING, INC.

SCALE: NTS

International
WasteEnergy
Systems
ST. LOUIS, MO.

TITLE
INORGANIC TREATMENT
NON-PUMPABLE WASTE HANDLING
FOUNDATION PLAN

DRAWN	DATE	APPD	DATE	DRAWING NO.	REV.
M.J.A.	1/13/89				
CHKD	DATE		DATE	8813-00-S-032	F

8813S032

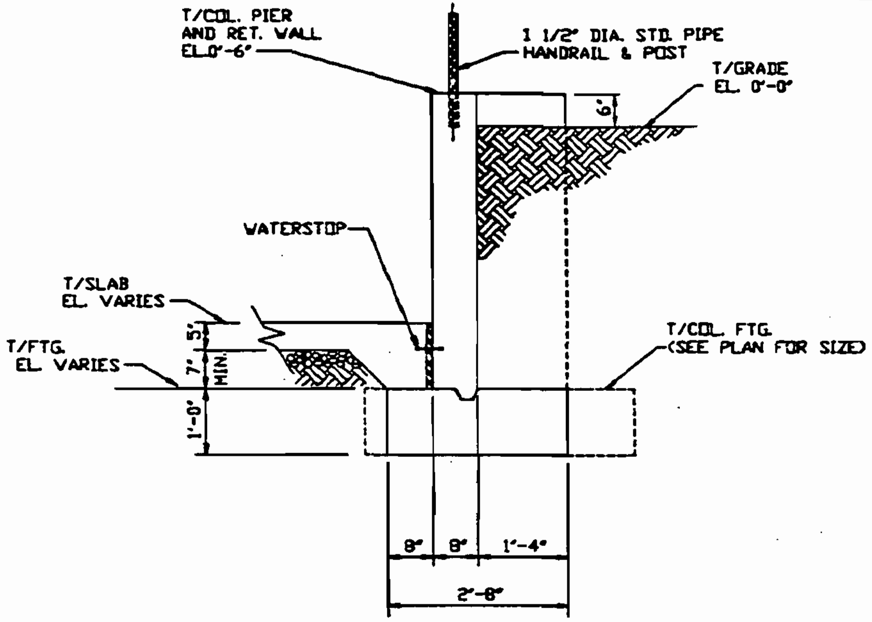

SECTION B S032

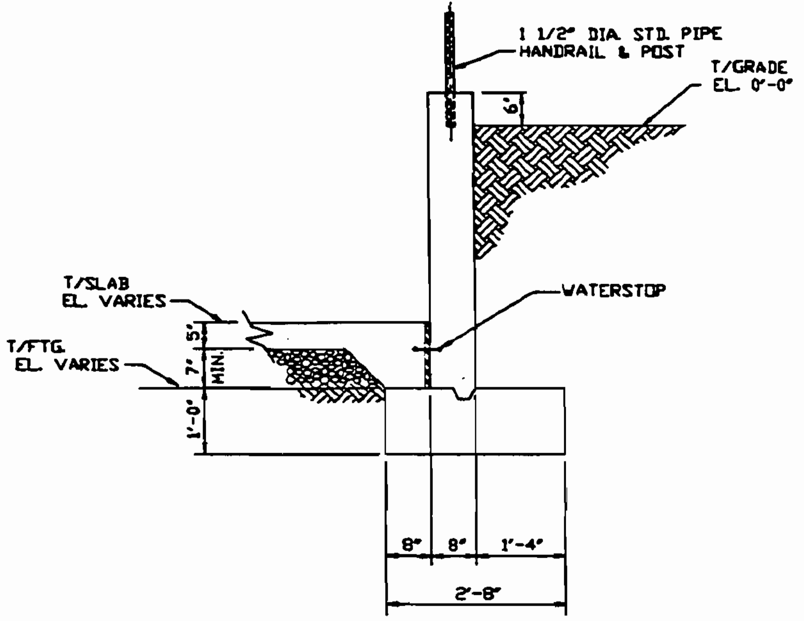

SECTION C S032

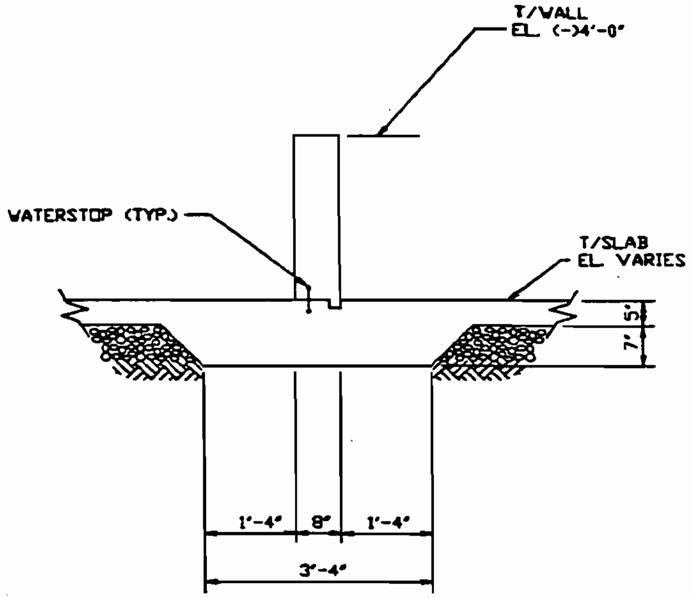

SECTION D S032

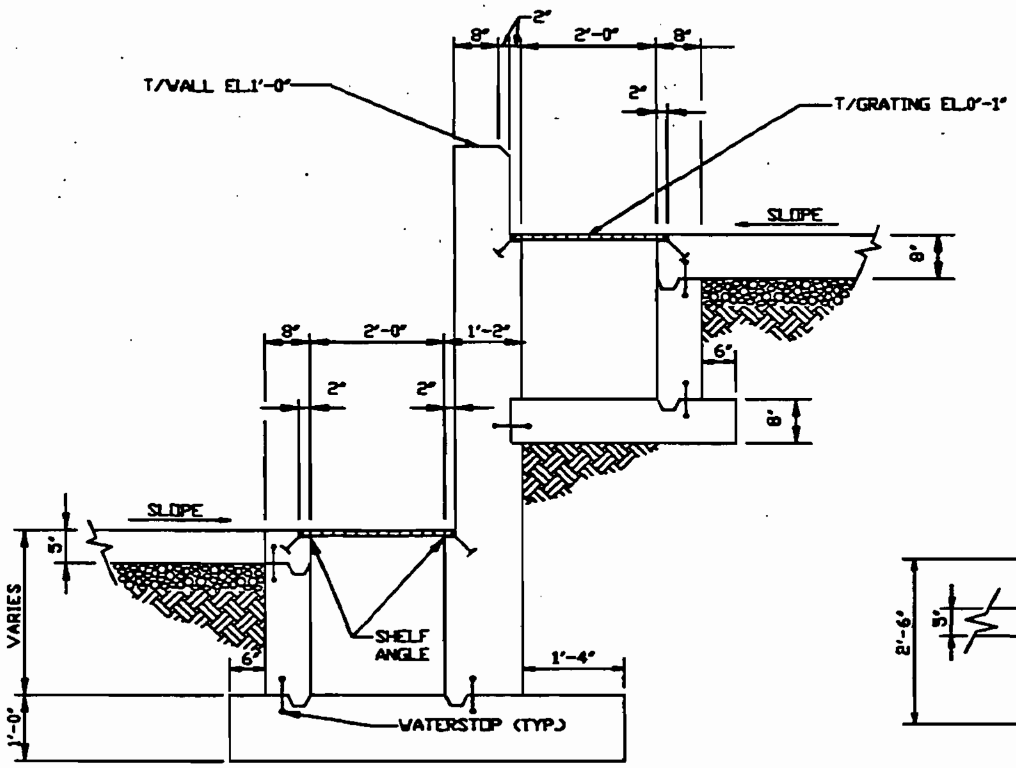

SECTION E S032

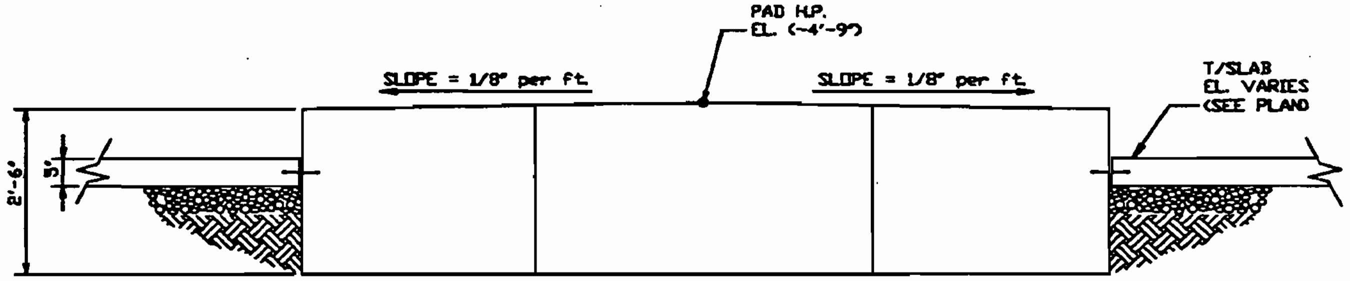

SECTION F S032

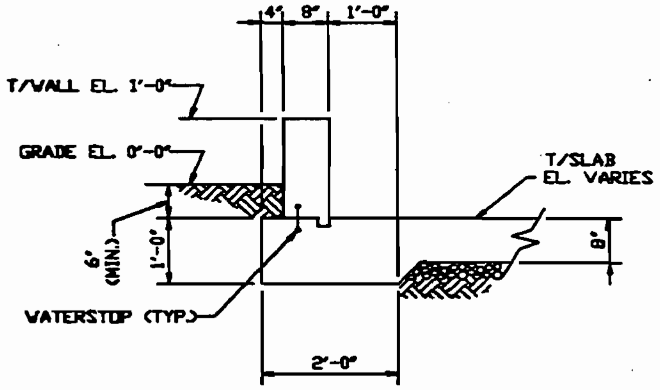

SECTION G S032

DICK M. MILLER

This document has been [illegible] only. It is [illegible] construction or any other purpose.

REV.	DATE	REVISION	BY	CHKD
F	9/21/90	REVISED AND REISSUED FOR PERMIT	R.S.M.	JCS
E	9/20/88	GENERAL REVISION	S.C.M.	R.S.M.
D	5/01/88	GEN. REVISION & REISSUED FOR PERMIT	L.C.D.	
C	4/28/88	ISSUED FOR PERMIT	T.E.R.	J.L.S.
B	2/24/88	ISSUED FOR CLIENT REVIEW	M.J.A.	
A	1/19/88	ISSUED FOR INTERNAL REVIEW	M.J.A.	

PROJECT
FLORIDA FIRST
PROCESSING, INC.

SCALE: NTS

International
WasteEnergy
Systems
ST. LOUIS, MO.

TITLE
INORGANIC TREATMENT
NON-PUMPABLE WASTE HANDLING
FOUNDATION SECTIONS AND DETAILS

DRAWN	DATE	APPD	DATE	DRAWING NO.	REV.
M.J.A.	1/17/88			8813-00-S-033	F
CHKD	DATE		DATE		

88135033

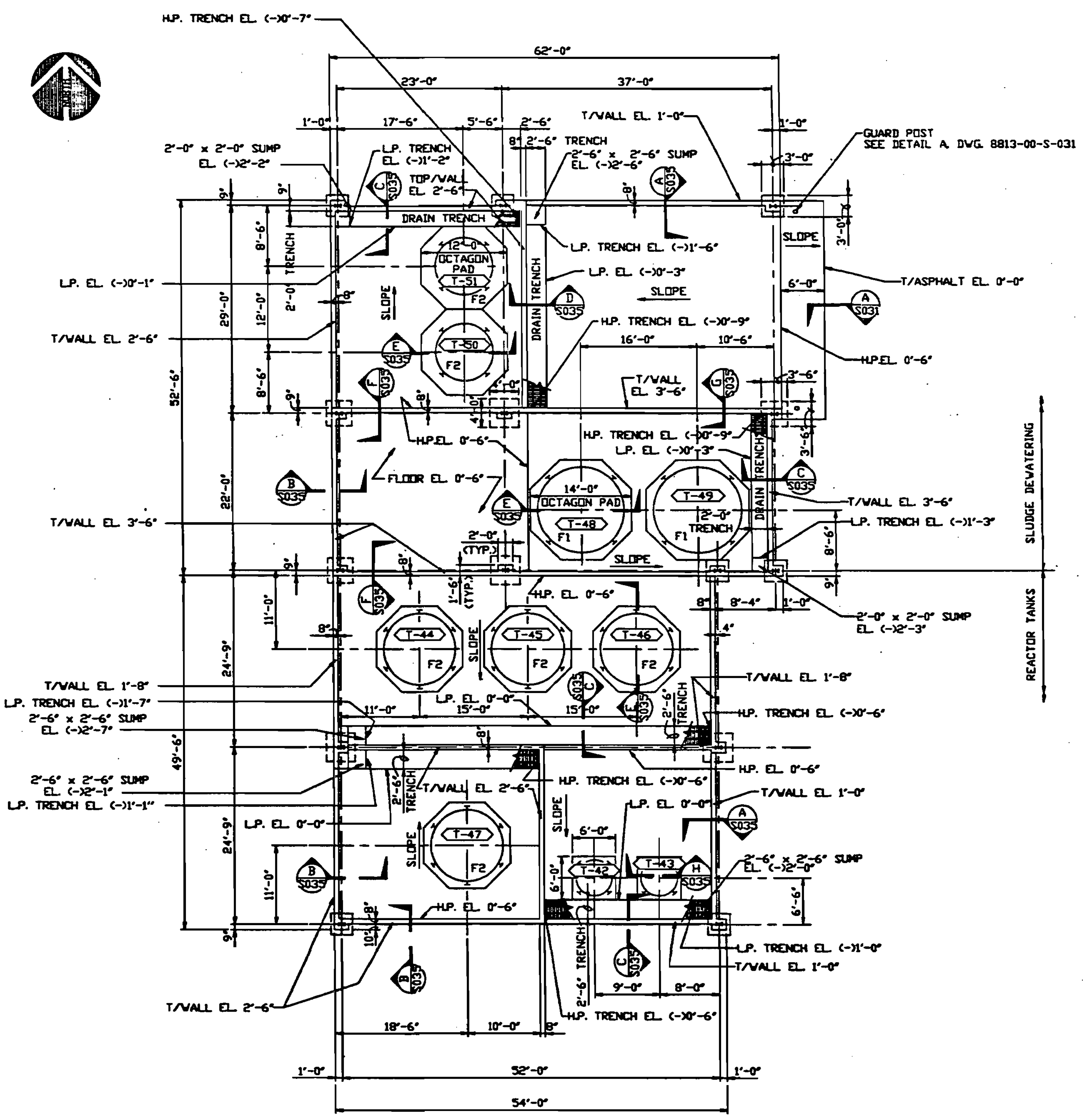

PLAN

TANK ITEM NO.	DESCRIPTION
T-42	POLYMER TANK
T-43	LIME SLURRY HOLDING TANK
T-44	MULTI-PURPOSE REACTOR
T-45	MULTI-PURPOSE REACTOR
T-46	MULTI-PURPOSE REACTOR
T-47	CYANIDE REACTOR
T-48	FILTER FEED TANK
T-49	FILTER FEED TANK
T-50	FILTRATE HOLDING TANK
T-51	FILTRATE HOLDING TANK

NOTES:

1) FOR GENERAL CONCRETE AND FOUNDATION NOTES SEE DRAWING 8813-00-S-001.

DICK M. MILLER 61834

This document [illegible]

REV.	DATE	REVISION	BY	CHKD
E	9/21/90	REVISED AND REISSUED FOR PERMIT	R.S.M.	JZS
D	9/20/89	GENERAL REVISION	S.C.H.	RSM
C	4/28/89	ISSUED FOR PERMIT	T.E.R.	JLS
B	3/08/89	ISSUED FOR WAPORA REVIEW	M.K.	JLS
A	1/17/89	ISSUED FOR INTERNAL REVIEW	M.K.	

PROJECT
FLORIDA FIRST
PROCESSING, INC.

SCALE: NTS

International
WasteEnergy
Systems
ST. LOUIS, MO.

TITLE
INORGANIC TREATMENT
SLUDGE DEWATERING & REACTOR TANKS
FOUNDATION PLANS

DRAWN	DATE	APPD	DATE	DRAWING NO.	REV.
M.K.	1/16/89			8813-00-S-034	E
CHKD	DATE		DATE		

8813S034

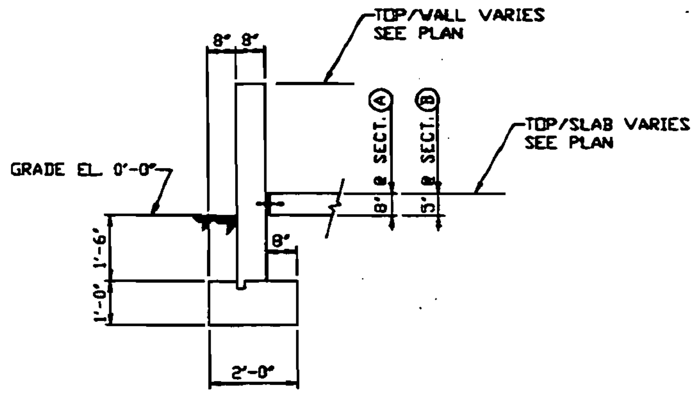

SECTION A S034

SECTION B S034

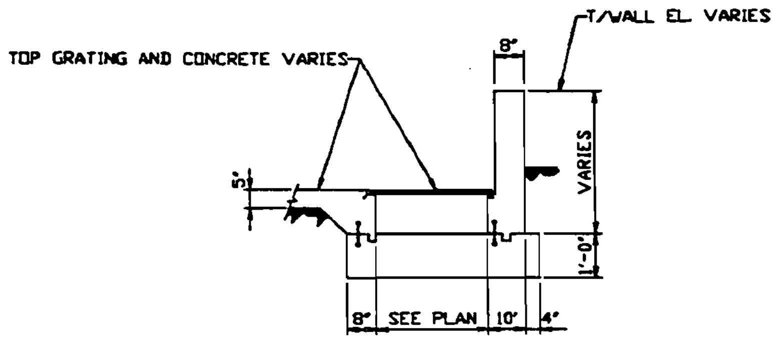

SECTION C S034 S038

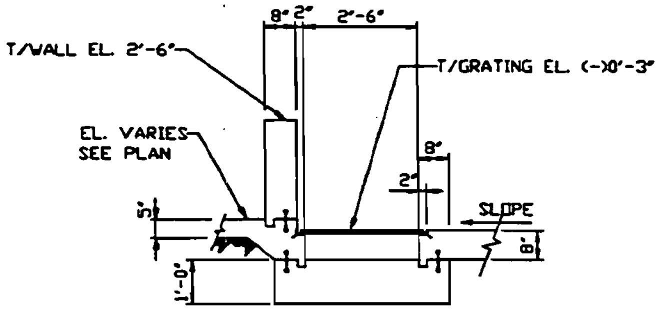

SECTION D S034

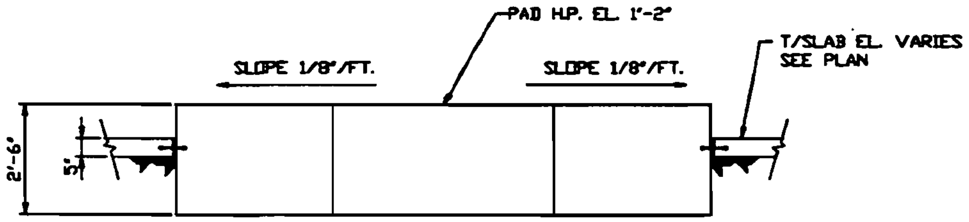

SECTION E S034 S038

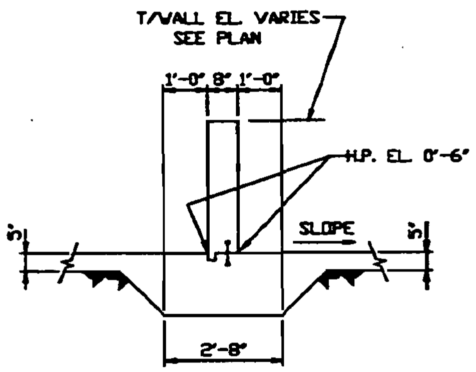

SECTION F S034 S038

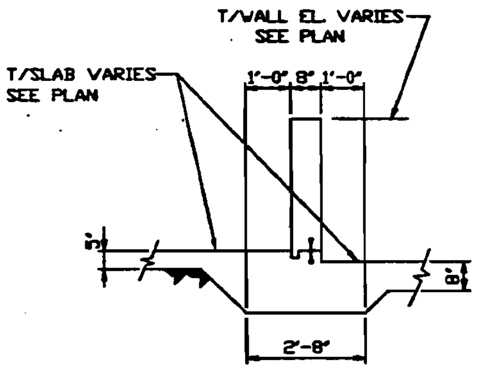

SECTION G S034

SECTION J S038

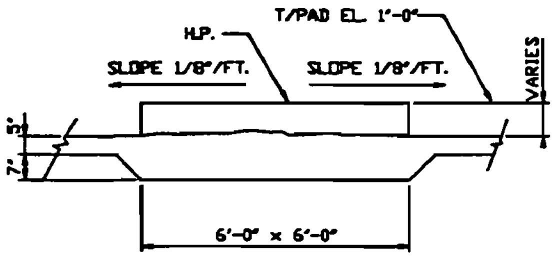

SECTION H S034

DICK M. MILLER

REV.	DATE	REVISION	BY	CHKD
E	9/21/90	REVISED AND REISSUED FOR PERMIT	R.S.M.	JCS
D	9/21/89	GENERAL REVISION	S.C.H.	RSM
C	4/28/89	ISSUED FOR PERMIT	T.E.R.	J.S
B	3/08/89	ISSUED FOR WAPORA REVIEW	M.K.	J.S
A	1/18/89	ISSUED FOR INTERNAL REVIEW	M.K.	

PROJECT
FLORIDA FIRST
PROCESSING, INC.

SCALE: NTS

International
WasteEnergy
Systems
ST. LOUIS, MO.

TITLE
INORGANIC TREATMENT
FOUNDATION SECTIONS & DETAILS

DRAWN	DATE	APPD	DATE	DRAWING NO.	REV.
M.K.	1/17/89			8813-00-S-035	E
CHKD	DATE		DATE		

8813S035

TANK ITEM NO.	DESCRIPTION
T-21	ALKALINE/CYANIDE DRUM WASTE RECEIVING TANK
T-22	ACIDIC/CHROMATE DRUM WASTE RECIEVING TANK

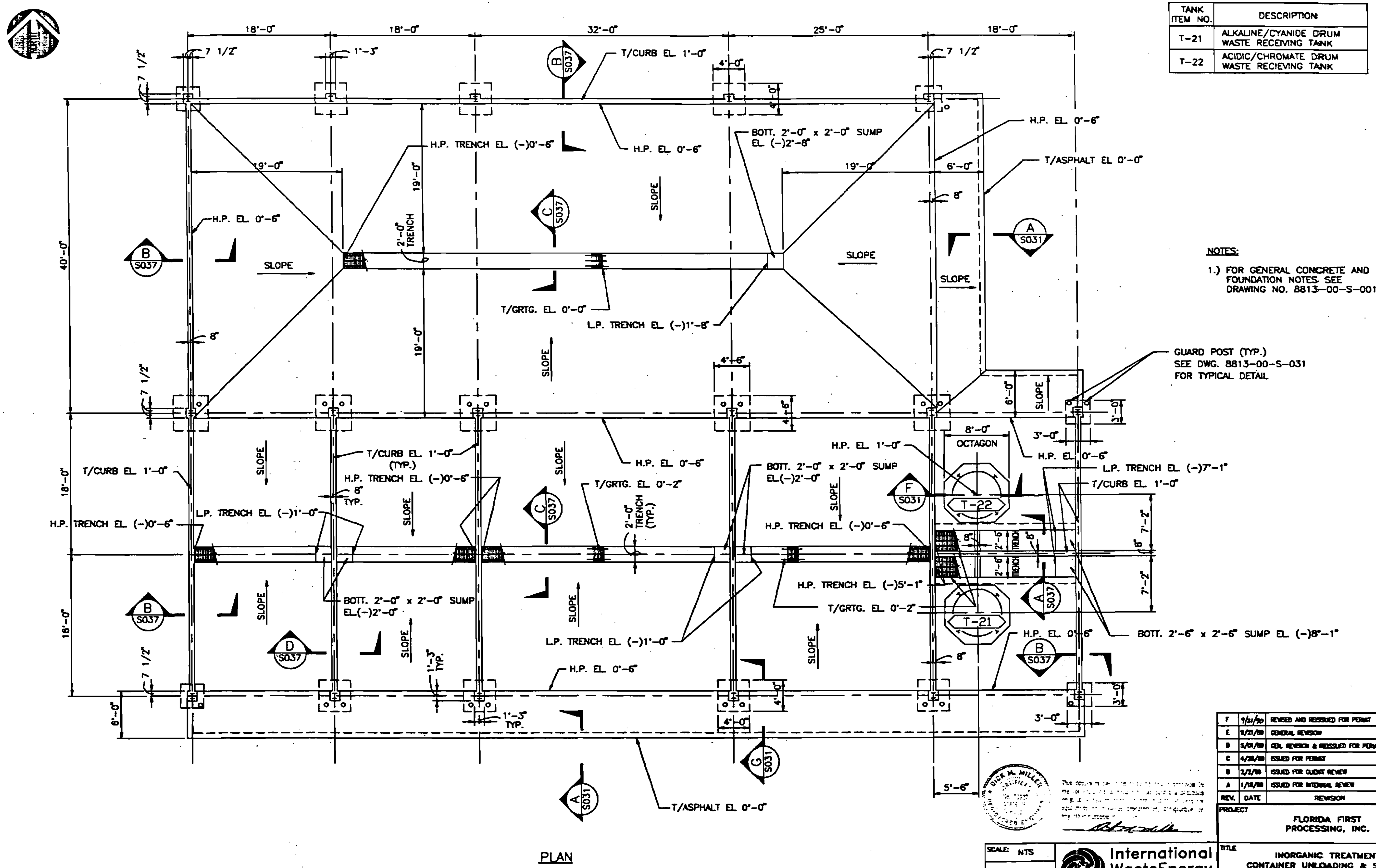

PLAN

NOTES:

1.) FOR GENERAL CONCRETE AND FOUNDATION NOTES SEE DRAWING NO. 8813-00-S-001.

DICK M. MILLER

REV.	DATE	REVISION	BY	CHKD
F	9/21/90	REVISED AND REISSUED FOR PERMIT	R.S.M.	JCS
E	9/21/88	GENERAL REVISION	S.C.H.	R.S.M.
D	5/01/88	GEN. REVISION & REISSUED FOR PERMIT	L.C.D.	J.L.S.
C	4/28/88	ISSUED FOR PERMIT	T.E.R.	J.L.S.
B	2/2/88	ISSUED FOR CLIENT REVIEW	M.K.	
A	1/18/88	ISSUED FOR INTERNAL REVIEW	M.K.	

PROJECT

FLORIDA FIRST
PROCESSING, INC.

SCALE: NTS

International WasteEnergy Systems
ST. LOUIS, MO.

TITLE

INORGANIC TREATMENT
CONTAINER UNLOADING & STAGING
FOUNDATION PLAN

DRAWN	DATE	APPD	DATE	DRAWING NO.	REV.
M.K.	1/17/88			8813-00-S-036	F
CHKD	DATE		DATE		

8813S036

F-1

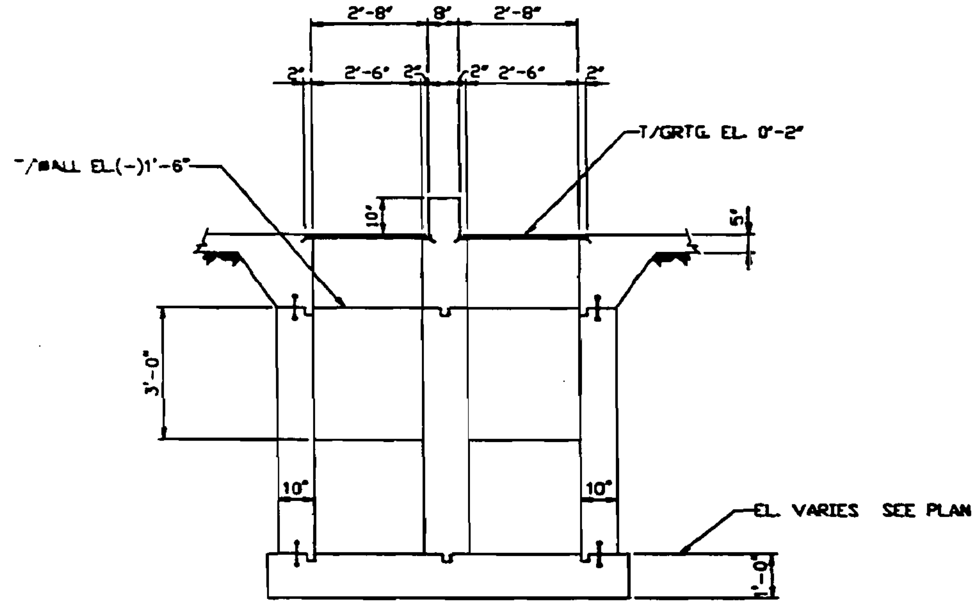

SECTION A S036

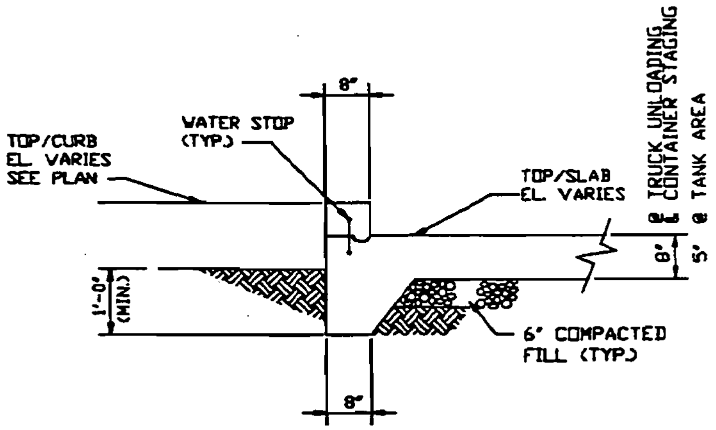

SECTION B S036

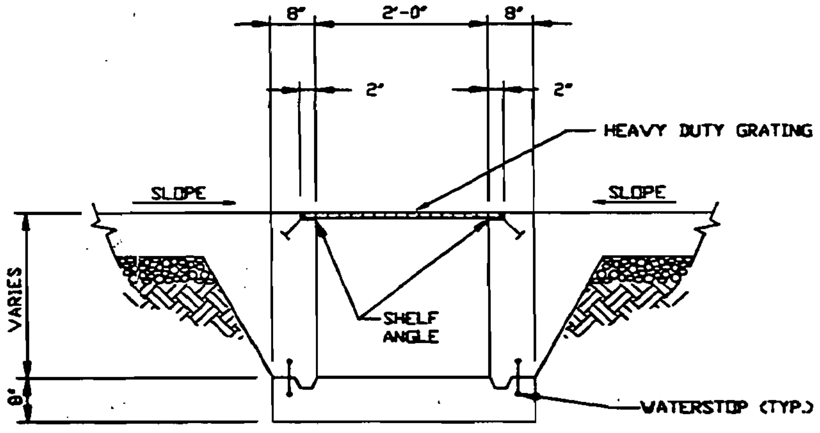

SECTION C S036

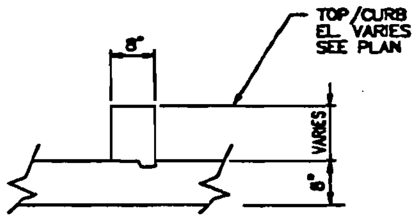

SECTION D S036

DICK M. MILLEN

E	9/21/90	REVISED AND REISSUED FOR PERMIT	R.S.M.	JZS
D	9/21/89	GENERAL REVISION	S.C.M.	R.S.M.
C	4/28/89	ISSUED FOR PERMIT	T.E.R.	J.L.S.
B	2/2/89	ISSUED FOR WAPORA REVIEW	M.K.	
A	1/18/89	ISSUED FOR INTERNAL REVIEW	M.K.	
REV.	DATE	REVISION	BY	CHKD

PROJECT
FLORIDA FIRST
PROCESSING, INC.

SCALE: NTS

International
WasteEnergy
Systems
ST. LOUIS, MO.

TITLE
INORGANIC TREATMENT
MISC. FOUNDATION SECTIONS & DETAILS

DRAWN M.K.	DATE 1/17/89	APPD	DATE	DRAWING NO.	REV.
CHKD	DATE		DATE	8813-00-S-037	E

8813S037

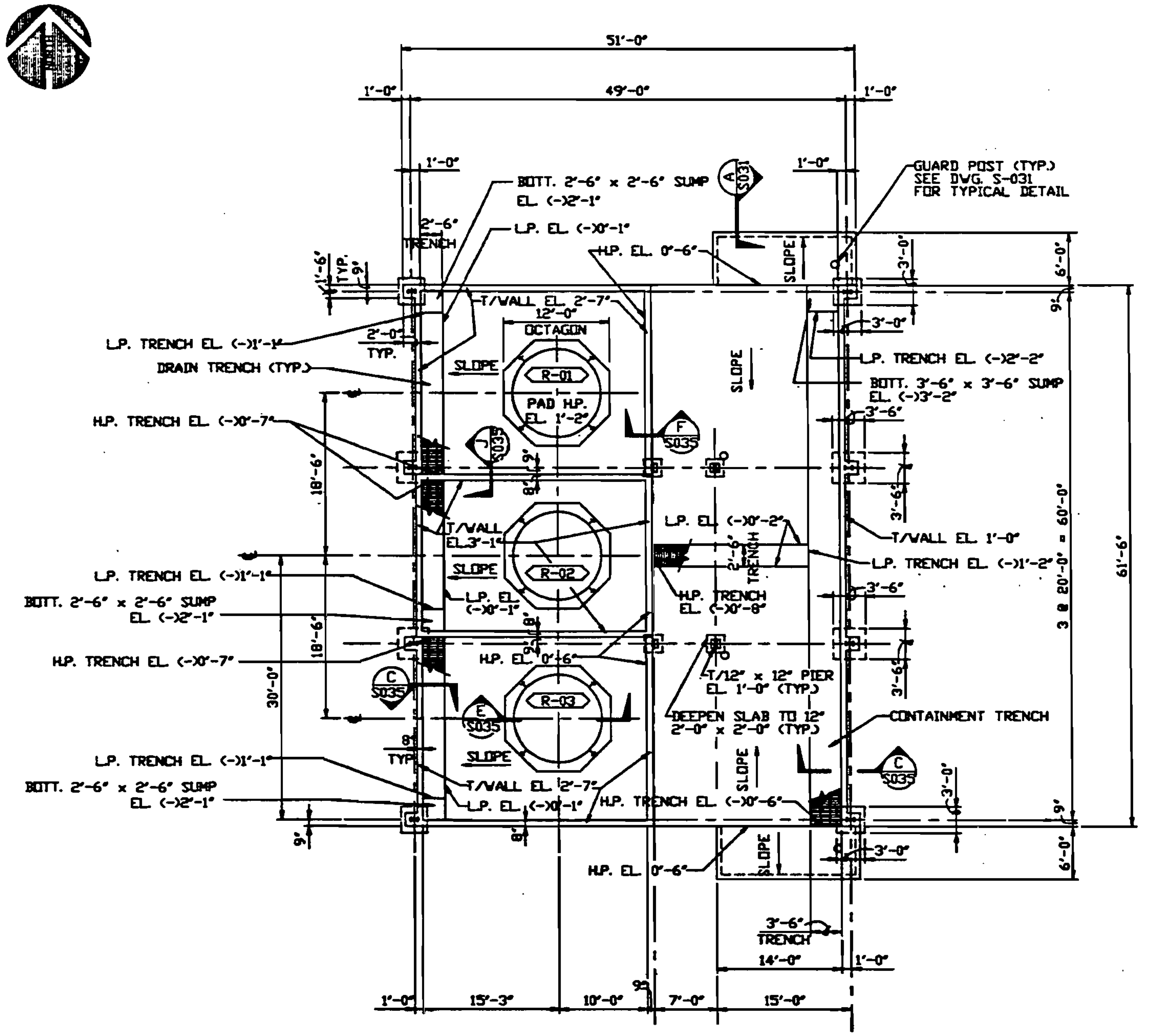

PLAN

TANK ITEM NO.	DESCRIPTION
R-01	SODIUM HYDROCHLORITE TANK
R-02	SODIUM BISULFITE TANK
R-03	SULFURIC ACID TANK

NOTES:

1.) FOR GENERAL CONCRETE AND FOUNDATION NOTES SEE DRAWING 8813-00-S-001.

DICK M. MILL

REV.	DATE	REVISION	BY	CHKD
F	9/21/90	REVISED AND REISSUED FOR PERMIT	R.S.M.	JZS
E	9/20/89	GENERAL REVISION	S.C.H.	R.S.M.
D	5/01/89	GEN. REVISION & REISSUED FOR PERMIT	L.C.D.	
C	4/28/89	ISSUED FOR PERMIT	T.E.R.	J.L.S.
B	3/8/89	ISSUED FOR CLIENT REVIEW	M.K.	J.L.S.
A	1/19/89	ISSUED FOR INTERNAL REVIEW	M.K.	

PROJECT

FLORIDA FIRST
PROCESSING, INC.

TITLE

INORGANIC TREATMENT
REAGENT UNLOADING & STORAGE
FOUNDATION PLAN

SCALE: NTS

International
WasteEnergy
Systems

ST. LOUIS, MO.

DRAWN	DATE	APPD	DATE	DRAWING NO.	REV.
M.K.	1/18/89			8813-00-S-038	F
CHKD	DATE		DATE		

8813S038

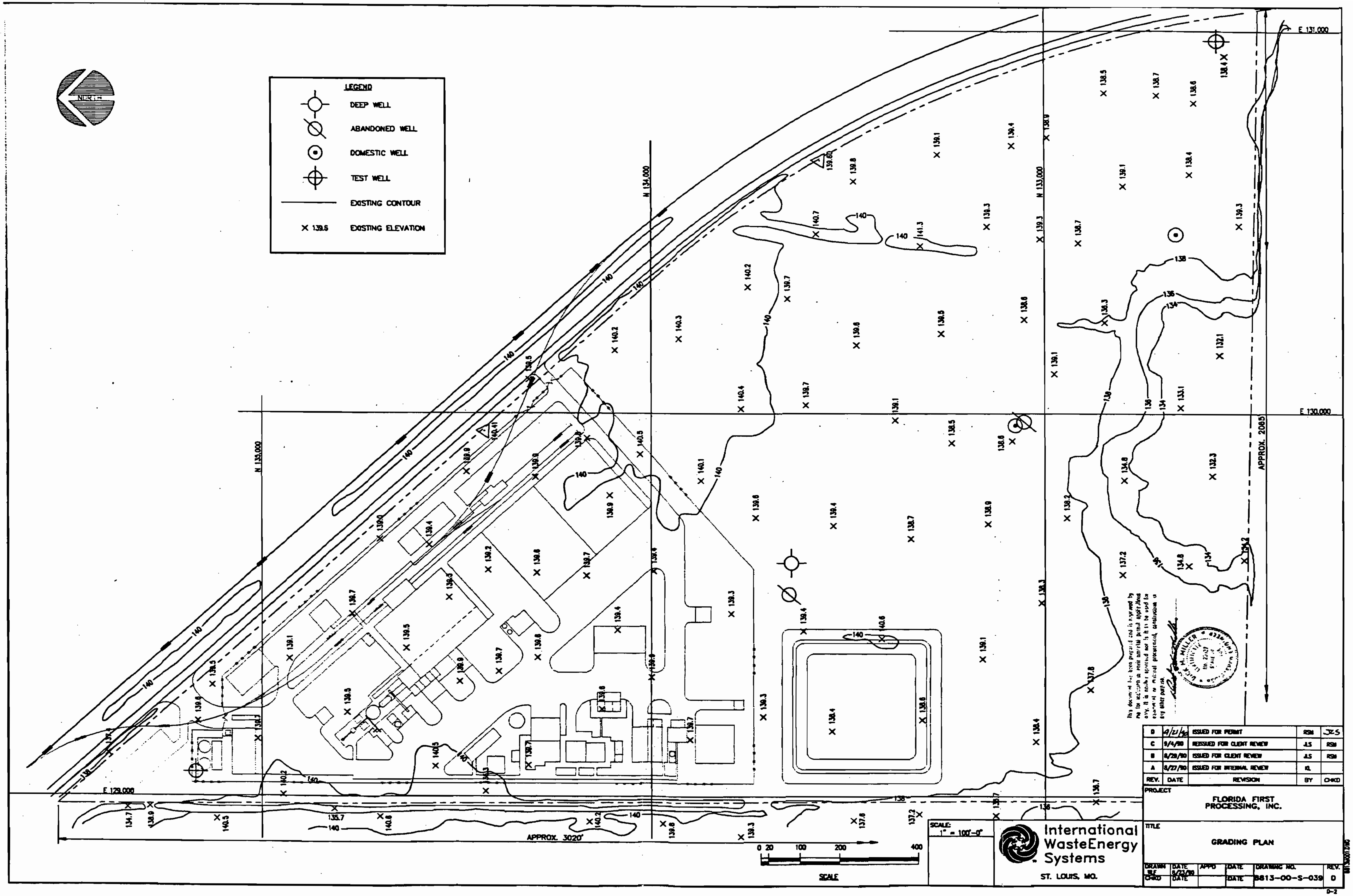

LEGEND

DEEP WELL	
ABANDONED WELL	
DOMESTIC WELL	
TEST WELL	
EXISTING CONTOUR	
× 139.6	EXISTING ELEVATION

This document has been prepared and is approved by me for inclusion in environmental permit applications only. It is neither approved nor is it to be used for commercial or material procurement, construction or any other purpose.

No. 25027

International WasteEnergy Systems
ST. LOUIS, MO.

REV.	DATE	REVISION	BY	CHKD
D	9/21/90	ISSUED FOR PERMIT	RSM	JES
C	9/4/90	REISSUED FOR CLIENT REVIEW	JLS	RSM
B	8/28/90	ISSUED FOR CLIENT REVIEW	JLS	RSM
A	8/27/90	ISSUED FOR INTERNAL REVIEW	RL	

PROJECT
FLORIDA FIRST
PROCESSING, INC.

TITLE
GRADING PLAN

DRAWN	DATE	APPD	DATE	DRAWING NO.	REV.
RLF	8/23/90				
CHKD	DATE		DATE	B813-00-S-039	D

D-2

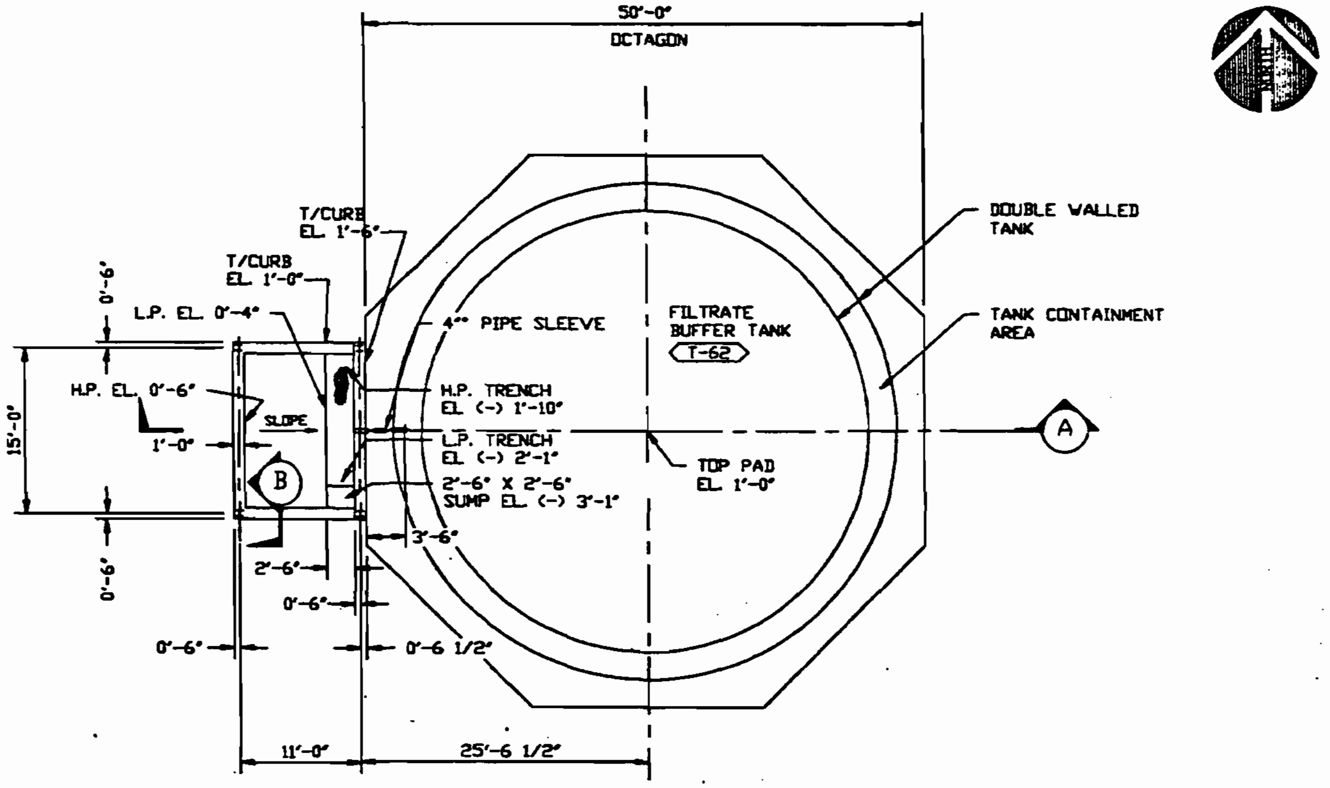

PLAN

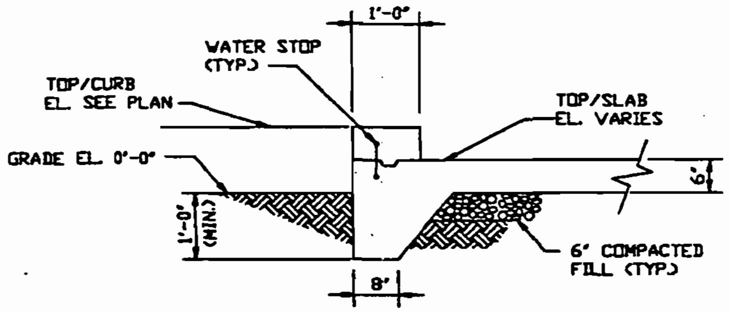

SECTION Ⓑ

NOTES:

1. FOR GENERAL CONCRETE AND FOUNDATION NOTES SEE DRAWING 8813-00-S-001
2. FOR LOCATION - SEE SITE PLAN DRAWING 8813-00-M-001
3. FOR GENERAL ARRANGEMENT SEE DRAWING 8813-00-M-036

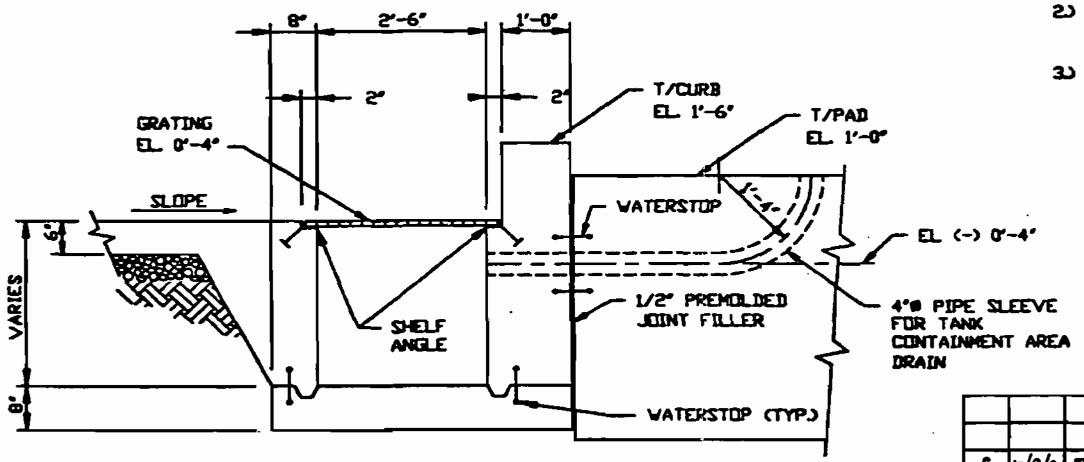

DETAIL Ⓒ

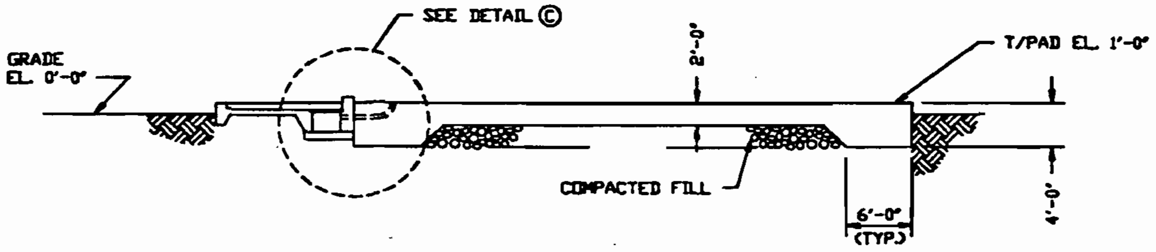

SECTION Ⓐ

This document has been prepared and is approved by me for inclusion in environmental permit applications only. It is neither approved nor is it to be used for equipment or material procurement, construction or any other purpose.

Dick M. Miller

DICK M. MILLER No. 20927

SCALE: N.T.S.

International WasteEnergy Systems
ST. LOUIS, MO.

REV.	DATE	REVISION	BY	CHKD
C	10/8/90	ISSUED FOR PERMIT	RSM	JCS
B	10/3/90	ISSUED FOR CLIENT REVIEW	RSM	JLS
A	10/3/90	ISSUED FOR INTERNAL REVIEW	RSM	JLS

PROJECT
FLORIDA FIRST
PROCESSING, INC.

TITLE
INORGANIC TREATMENT
FILTRATE BUFFER TANK
FOUNDATION PLAN & SECTIONS

DRAWN	DATE	APPD	DATE	DRAWING NO.	REV.
WLF	10/2/90				
CHKD	DATE		DATE	8813-00-S-040	C

FILE NAME: \8813\8813S040.DWG

C-1

INTERNATIONAL WASTE ENERGY SYSTEMS

2150 KIENLEN AVENUE
TELEPHONE (314) 389-7275
ST. LOUIS, MISSOURI 63121
TELEX 44-2438

SHEET 9 OF 17
INDEX NO. ....
REV. NO. A

PROJECT NO. 8813/9010-01

SUBJECT FFP ORGANIC TREATMENT MADE BY ECS DATE 1/3/91

CONTAINMENT - CONTAINER TRUCK UNLOAD CHECKED BY .... DATE ....

REF. DWGS (S-007) & (M-012)

CONTAINMENT REQ'D

ASSUME LARGEST TRAILER 8' x 45'

ASSUME NOMINAL 4 FT □ PALLET W/ 4 (55 GAL) DRUMS PER PALLET

2 PALLETS x 11 PALLETS x 4 DRUMS/PALLET x 55 GAL = 4840 GAL / TRUCK

2 TRUCKS REQ'D = 9680 GAL CONTAINMENT = 10% = 968 GAL REQ'D

CONTAINMENT FURNISHED

TRENCH

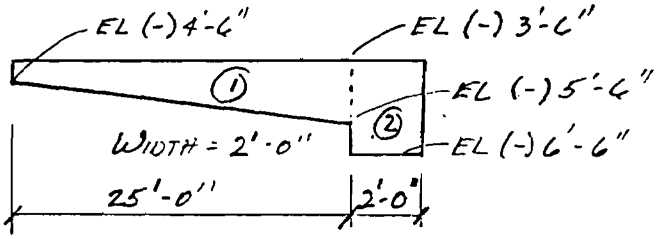

AREA ① 2' x 25' x 1.5' = 75 FT^3

AREA ② 2' x 2' x 3' = 12 FT^3

TOTAL TRENCH = 87 FT^3 x 7.48 GAL/FT^3 = 650.76 GAL

UNLOADING BAY

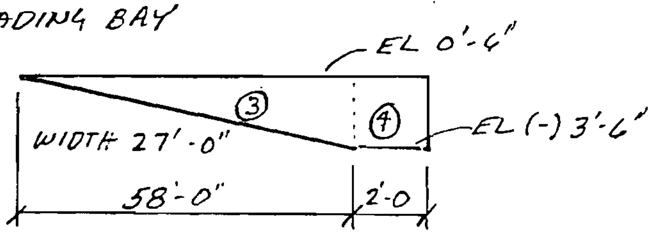

AREA ③ 58' x 27' x 2' = 3132 FT^3

AREA ④ 2' x 27' x 4' = 216 FT^3

TOTAL BAY 3348 FT^3 x 7.48 GAL/FT^3 = 25,043.04 GAL

TOTAL CONTAINMENT OF TRENCH & UNLOADING BAY

25,043.04 GAL + 650.76 GAL = 25,694 GAL

[Appendix D-6 has been replaced in its entirety]

FLORIDA FIRST PROCESSING, L.P.

APPENDIX D-6

TRIAL BURN PLAN

TRIAL BURN PLAN
TABLE OF CONTENTS

1.0 TRIAL BURN TEST PROTOCOL

TABLE OF CONTENTS (CONT.)

TABLE OF CONTENTS (CONT.)

TABLE OF CONTENTS (CONT.)

TABLE OF CONTENTS (CONT.)

LIST OF FIGURES

TABLE OF CONTENTS (CONT.)

LIST OF TABLES

OVERVIEW OF THE TRIAL BURN PLAN

1. GENERAL

The FFP-LP facility is designed to handle a wide variety of waste streams over a range of incinerator operating conditions. Accordingly the trial burn test conditions have been designed to demonstrate the envelope of operating parameters within which the facility can operate safely and efficiently. The trial burn strategy is to introduce the maximum amounts of organic chlorine, metals and ash anticipated to occur in wastes to be received at the facility and to burn them in conjunction with the least incinerable POHCs. Operating conditions have been selected to demonstrate the ability of the incineration system to operate under the extremes of expected waste feed characteristics in order to justify the requested permit conditions.

2. POCHs

FFP-LP proposes the number of POHCs and the method of addition as follows:

a. Selection

The following POHCs were selected for the trial burn:

- Tetrachloroethylene (C_2Cl_4)
- Carbon tetrachloride (CCl_4)
- Chlorobenzene ($C_6H_3Cl_3$)
- 1,2,4-Trichlorobenzene ($C_6H_3Cl_3$)

Tetrachloroethylene was chosen as a POHC because:

- It has a boiling point of 121°C, and thus is a relatively high-boiling-point POHC
- It is ranked relatively high in thermal stability (Class 2).

Carbon tetrachloride was chosen as a POHC because:

12/18/90

- It is considered a fairly "standard" POHC.
- It has a boiling point of 77°C, and thus is a volatile POHC.
- It has one of the lowest (0.24 kcal/g) heats of combustion of Appendix VIII compounds.
- It has an intermediate thermal stability (Class 4).

Chlorobenzene was chosen as a POHC because:

- It has a boiling point of 132°C, and is one of the highest-boiling POHCs which has been certified for VOST sampling.
- It has one of the highest thermal stabilities (Class 1).

1,2,4-trichlorobenzene was chosen as a POHC because:

- It has a melting point of 17°C and can readily be incorporated into solids feed.
- It is a semi-volatile POHC.
- It is ranked high in thermal stability (Class 1).

The use of these POHCs in the Trial Burn will allow FFP-LP to demonstrate that it can burn all Appendix VIII in compounds in the incinerator.

b. Method of Addition

POHC will be injected into the pumpable waste feed streams at a level of approximately 7-8% of the waste feed rate by metering pumps. Portable tanks on weigh scales will be used as reservoirs for these pumps in order to obtains highly accurate POHC mass feedrates. A 1:1:1:1 mixture of the above POHCs will be used throughout the tests to spike each of the waste streams.

POHC will be also fed in 1-gallon pails inserted into plastic or fiber drums filled with solids as containerized waste. The plastic pails will be partially filled with a dry absorbent, and a measured quantity of the POHC mixture will be absorbed into the material.

Bulk solids will not have POHC, but POHC will be fed in containerized waste simultaneous with bulk solids feed. This avoids the problems inherent in trying to mix the POHC to accurate concentrations in the bulk solids feed. An additional degree of conservatism during each test is provided by the injection of POHC directly into the SCC as well. The feed system will alternate charges of bulk and containerized wastes during Test 1.

3. DEMONSTRATED PARAMETERS AND EXPECTED PERMIT CONDITIONS

As provided for in the "Guidance On Setting Permit Conditions And Reporting Trial Burn Results". Volume II Of The Hazardous Waste Guidance Series, January, 1989, FFP-LP is taking the multiple waste/single condition or "universal" approach. Because it is not possible to achieve maximum feedrates for all streams simultaneously, three tests are necessary.

To make it easier for the permit writer to interpret the results from these tests, we will attempt to run all three tests at almost the same thermal duty and combustion gas velocity. It is not possible, however, to run all of these at the same temperatures and excess air levels. In fact the more conservative test for metals removal efficiency requires kiln temperature to be elevated well above the minimum to ensure volatilization of the metals into the gas stream.

Per section 3.6 of the above guidance manual, "Maximum feed rates for each stream could still be allowed in the permit. The restrictions on [minimum] temperature, [maximum] combustion gas velocity, and [maximum] thermal duty would prevent the operator from maximizing all of them simultaneously."

See Table 1.6 for a clear presentation of the overall trial burn goals. The parameters to be demonstrated in each test are as follows:

a. Test 1

- Maximum solids (bulk solids and containerized waste) throughput to kiln(25,000 lb/hr)
- Maximum high-Btu liquid throughput to kiln and SCC (8,000 lb/hr)

- Minimum kiln temperature (1,400°F)
- Maximum ash loading (21,500 lb/hr)
- Simultaneous feed of every waste stream (sludge, bulk solids/containerized wastes to kiln, low-Btu and high-Btu liquid to kiln and SCC)

b. Test 2

- Maximum low-Btu liquid throughput to kiln and SCC (5,500 lb/hr)
- Maximum sludge throughput to kiln (8,300 lb/hr)
- Minimum SCC temperature (1,800°)
- Maximum chlorine loading (1,202 lb/hr)
- Maximum metals loading at the highest kiln temperature
- Simultaneous feed of every waste stream (sludge, bulk solids/containerized wastes to kiln, low-Btu and high-Btu liquid to kiln and SCC)

c. Test 3

- Maximum combustion gas flow/minimum SCC gas residence time (71,000 acfm at the stack).
- Simultaneous feed of every waste stream (sludge, bulk solids/containerized wastes to kiln, low-Btu and high-Btu liquid to kiln and SCC)
- Maximum energetic containerized waste parcel size
- Feed of energetic containerized waste in steel drums

The permit parameters that will be based upon best engineering judgement, equipment performance, manufacturer's design and operating specifications rather than measured trial burn levels are as follows:

a. Maximum CO concentration in combustion gas (100 ppm on hourly rolling average)

b. Maximum HCl concentration in combustion gas (100 ppm on hourly rolling average)

c. Minimum O_2 concentration in combustion gas (3%)

d. Minimum fabric filter differential pressure (1" wc)

e. Minimum combustion chamber pressure (-0.05" wc for 30 seconds)

f. Maximum kiln outlet gas temperature (2400°F)

g. Maximum thermal capacity of each combustion chamber (Kiln: 75 MM Btu/hr, SCC: 40 MM Btu/hr)

h. Burner parameters

   - maximum waste viscosity (150 SSU)
   - maximum burner turndown (4:1)
   - minimum atomization media pressure (20 psig)
   - minimum waste heating value (5,000 Btu/lb)

i. Maximum temperature of inlet gas to APCE (2400°F)

Test 2 will demonstrate a high-temperature kiln (slagging mode) and low-temperature SCC, while tests 1 and 3 will demonstrate a low-temperature kiln (ashing mode) and high-temperature SCC. Test 1 and 3 will use high-Btu liquid waste to control kiln and SCC temperature. Estimated trial burn feed compositions are presented in Table 1.4.1. Figures 1.6.2, 1.6.3 and 1.6.4 illustrate the three test conditions.

4. BULK SOLIDS AND CONTAINERIZED WASTE FEED RATIONALE

a. Introduction

The bulk solids and containerized waste feed systems both terminate at the kiln feed chute, where the material falls by gravity through a double-door airlock.

The systems will be interlocked such that only one can discharge to the feed chute at a time.

b. POHC Spiking

Since the sampling and analysis protocol for spiking solids with POHCs is far more straightforward and reliable with containerized waste than with bulk solids, FFP-LP has elected to spike containerized waste with POHC, but not to spike the bulk solids.

The bulk solids and containerized waste in Test 1 are essentially identical material (soil), and FFP-LP will alternate charges of bulk solids and containerized waste to simulate spiked bulk solids.

c. Simultaneous Feed

Bulk solids will be fed at near-maximum rate during Test 1, along with simultaneous feed of containerized waste. Total solids feedrate for this test is 25,000 lb/hr.

During Test 2, solids will be fed at a very low rate of 1,000 lb/hr in order to demonstrate the simultaneous use of the kiln feed chute for solids, along with all other waste feed systems.

During Test 3, energetic solids will be fed at the maximum rate of 9,000 lb/hr in order to demonstrate the simultaneous use of the kiln feed chute for solids, along with all other waste feed systems. FFP-LP plans to demonstrate specifically demonstrate feeding containerized energetic solids only, since these represent a worst-case operational scenario in terms of the potential for causing "puffs".

5. METALS

FFP-LP is taking a multiple waste/single point or "universal" approach to metals feeds, such that the only control parameters will be total feedrate of each metal.

FFP-LP proposes to spike an aqueous metals solution into the low-Btu liquid waste and inorganic filtrate streams with a metering pump and weigh-scale tank (similar to the POHC feed system). High-Btu liquid, sludge, containerized waste and bulk solids streams would not have metals addition.

We propose to test metals removal efficiency only in trial burn test 2, since that test will have the highest kiln operating temperature and the highest chlorine loading. In addition, almost all of the low-Btu liquid (containing metals) will be fed to the SCC. This should be the most extreme case for metals emissions.

1.0 TRIAL BURN TEST PROTOCOL

1.1 INTRODUCTION

FFP-LP plans to build a rotary kiln incineration system in Polk County, Florida to meet the increasing need for waste handling in the Southeastern United States. The wastes being generated in the Southeast and Florida have been characterized in terms of waste type and current quantities. Although the general quantity and characteristics of the wastes currently being generated in the area are relatively well known, the potential for a change in this profile in the future is very high. As such, the waste feed characteristics and quantity information submitted with this plan are for the purposes of defining the incinerator design basis. The trial burn will be planned to provide the widest possible operating envelope and to allow for the combustion of the greatest number of possible waste types.

Accordingly, the trial burn test conditions have been designed to accomodate changes in waste characteristics and operating scenarios in the future. The trial burn waste feed compositions are designed to introduce the highest possible feedrates of organic chlorine, metals and ash as well as the least-incinerable POHCs anticipated in the future. Operating conditions have been selected to present a worst-case scenario, as far as the performance standards are concerned, in order to achieve the maximum operating envelope for the permit.

Three trial burn tests have been selected to demonstrate a wide range of incinerator facility capabilities and operating limits. The detailed test protocol includes variations in waste feed types, compositions and rates; combustion gas velocities and temperatures; use of auxiliary fuel; and other parameters that may affect the destruction and removal efficiency of the incineration facility. The three trial burn tests which are planned are summarized in Table 1.7.1-1.

The planned test protocols are based on detailed material and energy balances. Independent parameters that can be controlled are waste feed types, feedrates, feed composition, auxiliary fuel rate, and excess air (or combustion air flow rate), in both the rotary kiln and the SCC. Dependent variables include combustion gas flow rates (or gas residence time), residual O_2 levels, operating temperatures and flue gas composition. Since the simultaneous achievement of a specific set of operating conditions, such as temperature, residence time, residual O_2 levels and waste feedrates require very specific feed compositions and heating values, several of the waste feeds planned for this program may be surrogate mixtures that do not include any actual hazardous wastes, but simulate the worst-case examples expected by blending specific waste streams.

1.2 TRIAL BURN REGULATORY REQUIREMENTS

40 CFR 270.62 (b) (2) requires that the following information be furnished as part of the Trial Burn Plan (TBP):

1. An analysis of each waste or mixture to be burned, including

- Heat value of mixture
- Viscosity (if applicable) or description of physical form of waste
- Identification of any hazardous organic constituents listed in part 261, Appendix VIII that are present in the waste to be burned
- An approximate quantification of the hazardous constituents in the waste mixture within the precision of the specified test methods

This information is included in Section 1.4 of the TBP.

2. A detailed engineering description of the incineration system, including

    - Manufacturer's name and model number (if available)
    - Type of incinerator
    - Linear dimensions of incinerator, including cross-sectional area of combustion chamber
    - Description of the auxiliary feed system
    - Capacity of prime mover
    - Description of automatic waste feed cutoff system
    - Stack gas monitoring and pollution control equipment
    - Nozzle and burner design
    - Construction materials
    - Location and description of temperature, pressure, and flow indicating and control devices

This information is included in Section D-7 of the part B permit application.

3. A detailed description of sampling and monitoring procedures including sampling and monitoring locations in the system, the equipment to be

used, sampling and monitoring frequency, and planned analytical procedures for sample analysis

This information is included in Sections 2, 3 and 4 of the TBP. Reference methods are reproduced in Attachment D-6-2.

4. A detailed test schedule for each waste for which the trial burn is planned

This information is included in Section 1.8 of the TBP.

5. A detailed test protocol for each waste identified, the ranges of temperature, waste feedrate, combustion gas velocity, use of auxiliary fuel, and any other relevant parameters that will be varied to affect DRE

This information is included in Section 1.7 of the TBP.

6. A description of, and planned operating conditions for, any emission control equipment used

This information is included in Section D-7 of the part B permit application and in Section 1.7 of the TBP.

7. Procedures for rapidly stopping waste feed, shutting down the incinerator and controlling the emissions in case of an equipment malfunction

This information is included in Section D-7 of the part B permit application.

8. 40 CFR 270.62(b) (6) requires that the following information be determined or developed as a result of the trial burns. During each trial burn (or as soon thereafter as is practicable) the applicant must make the following determinations:

    - Quantitative analysis of the trial burn POHCs in the waste feed to the incinerator
    - Quantitative analysis of the exhaust gas to determine the concentration and mass emission rate of the trial burn POHCs and HCl

- Quantitative analysis of the scrubber waste (if any), ash residues and any other residues, for the purpose of estimating the fate of the trial burn POHCs

- Computation of DRE in accordance with the DRE formula in 40 CFR 264.343(a). The calculation methodology is included as Attachment D-6-1.

- If the HCl emission rate exceeds 1.8 kg/hr (4 lb/hr), a computation of HCl removal efficiency in accordance with 40 CFR 264.343(b)

- Computation of particulate emission in accordance with 40 CFR 264.343(c)

- An identification of sources of fugitive emissions and their means of control

- Measurement of average, maximum, and minimum temperatures and combustion gas velocity

- Continuous measurement of CO concentration in the exhaust gas

This information is included in Section 5 of the TBP.

9. Draft standards for emissions of metals from hazardous waste incinerators require determination of the maximum metals emissions from the incinerator and determination of the APCE removal efficiency for metals.

This information is included in Sections 1.4.3 and 1.4.4 of the TBP.

10. Certified reports of the operations and results must be filed to procure an Operating Permit.

Reporting of trial burn test results is discussed in Section 1.9. Data reporting forms are reproduced in Attachment D-6-3.

1.3 SELECTION OF POHCS

As provided in 40 CFR 270.62(b)(4), POHCs must be designated for a trial burn, and a DRE for these compounds must be demonstrated for the incinerator. The exact chemical nature of the wastes to be received is not known, nor is it possible to predict each compound and its concentration that will be incinerated by the unit during its lifetime. For the purposes of POHC selection, it has been assumed that all organic Appendix VIII compounds will be fed to the incinerator during its lifetime; therefore, the two primary rankings of compounds with respect to their combustibility have been used as criteria in the selection of POHCs. Selection of POHCs was based on simulated worst-case scenarios for incinerator operations as described in Section 1.7 and the criteria below.

The first ranking is the U.S. EPA's incinerability list which ranks compounds by heat of combustion. Any compound near the top of the list (i.e., having a low heat of combustion) is generally considered difficult to burn and is not normally used as a fuel. These compounds, therefore, are good POHC selections for a trial burn. The heat-of-combustion approach to POHC selection is based on equilibrium theories which claim that the primary concern in evaluating the difficulty of destruction for a compound is the amount of energy necessary to complete the combustion process and form water, carbon dioxide, and, in some cases, an acid gas, as final combustion products.

POHC selection approaches based on thermal stability have also been developed; however, the recent work of Dellinger at the University of Dayton Research Institute has developed thermal stability factors not previously considered in other hierarchies. This approach has been included in the EPA document "Guidance on Setting Permit Conditions and Reporting Trial Burn Results," Volume II of the Hazardous Waste Incineration Guidance Series, January 1989, (EPA/625/6-89/01).

This guidance ranks Appendix VIII compounds to produce a new hierarchy of compounds based on their thermal stability, with the most stable being considered the most difficult to incinerate. Any of the first 34 compounds (Class 1) on the list is considered extremely hard to destroy and therefore is a good POHC selection for a trial burn.

In addition to combustibility, other criteria influenced POHC selection:

- Physical state: POHCs have been limited to those constituents that are miscible liquids at ambient temperatures and pressures to facilitate POHC handling and quantification.
- Stability: compounds selected as POHCs were chosen to allow for conventional Volatile Organic Sampling Train (VOST) and Modified Method 5 (MM5 or M5-SV) sampling techniques.

The four POHCs chosen for the FFP-LP trial burn are as follows:

- Tetrachloroethylene (C_2Cl_4)
- Carbon tetrachloride (CCl_4)
- Chlorobenzene (C_6H_5Cl)
- 1,2,4-trichlorobenzene ($C_6H_3Cl_3$)

Tetrachloroethylene was chosen as a POHC because

- It has a boiling point of 121°C, and thus is a relatively high-boiling-point POHC.
- It is ranked relatively high in thermal stability (Class 2).

Carbon tetrachloride was chosen as a POHC because

- It is considered a fairly "standard" POHC.
- It has a boiling point of 77°C, and thus is a volatile POHC.
- It has one of the lowest (0.24 kcal/g) heats of combustion of Appendix VIII compounds.
- It has an intermediate thermal stability (Class 4).

Chlorobenzene was chosen as a POHC because

- It has a boiling point of 132°C, and is one of the highest-boiling POHCs which has been certified for VOST analysis.
- It has one of the highest thermal stabilities (Class 1).

1,2,4-trichlorobenzene was chosen as a POHC because

- It has a melting point of 17°C and can readily be incorporated into the solids feed.
- It is a semi-volatile POHC.
- It is ranked high in thermal stability (Class 1).

We anticipate that the type of Appendix VIII compounds in the waste feeds will change over time. In order to have enough flexibility for future operation, we will assume that all Appendix VIII compounds, with the exception of PCBs and waste codes F020-F023 and F026-F028, will be handled by the FFP-LP incinerator. The selection of the POHCs for the trial burn tests is based on this assumption.

All the selected POHCs are expected to be present in actual waste to be received by FFP-LP. Further, all the compounds are a source of organic chlorine, which will enable performance testing of the incinerator APC system. These POHCs will be used in the trial burn to demonstrate FFP-LP's capability of incinerating all Appendix VIII compounds with the exception of PCBs and dioxins. The properties of the four chosen POHCs are summarized in Table 1.3.

A 1:1:1:1 by weight mixture of these four POHCs will provide a liquid with 67% organic chlorine and a heating value of 5,144 Btu/lb.

Table 1.3
Incinerability Ranking for Selected POHCs

POHC[a]		Thermal Stability[b]		Heat of combustion (kcal/g)[e]
Compound name	**Formula**	**Ranking[c]**	**Class[d]**	
Chlorobenzene	C_6H_5Cl	19	1	6.60
1,2,4-trichlorobenzene	$C_6H_3Cl_3$	26 - 27	1	3.40
Tetrachloroethene (tetrachloroethylene)	CCl_2CCl_2	36	2	1.19
Tetrachloromethane (carbon tetrachloride)	CCl_4	136 - 140	4	0.24[f]

[a] All POHCs selected for the trial burn tests are pure chemicals, added by spiking or pre-blending with waste for selected runs.

[b] Thermal stability index per EPA document "Guidance on Setting Permit Conditions and Reporting Trial Burn Results," January 1989.

[c] Ranges from 1 to 320, with 1 being most difficult to destroy (most stable). Equivalently ranked compounds are assigned ranges.

[d] Ranges from 1 to 9, with 1 being most stable compounds.

[e] H_C (heat of combustion) ranges from 0.13 to 10.14, with 0.13 being most difficult to destroy (most stable).

[f] Second highest ranking of all organic Appendix VIII compounds (highest ranking chlorinated compounds).

1.4 TRIAL BURN MATERIALS

1.4.1 General

It is expected that during full-scale operation, the incinerator will burn several waste types simultaneously, including

- Bulk solids
- Containerized wastes
- Organic (high-Btu) liquids
- Aqueous (low-Btu) liquids
- Pumpable sludges

The combination of wastes burned at FFP-LP will depend on the types of wastes received, the heating value, metals content, chlorine content, and other characteristics, as well as a mass and heat balance which will define the combined feedrates of the wastes burned and enable compliance with the operating limits are delineated in Section 1.6.

The characteristics of the general waste types to be burned in the FFP-LP incinerator during the trial burns are listed in Table 1.4.1. As the types of wastes to be received at FFP-LP will vary, it is not possible to conduct trial burn tests for every possible combination of waste feeds. The three trial burn tests, however, will demonstrate the capability of the incinerator to

- Burn each of the waste types listed in Table 1.4.1
- Burn various combinations of wastes
- Operate in accordance with State and Federal RCRA and air pollution regulations at the operating limits specified in Section 1.6

Table 1.4.1 presents the predicted composition and heating value of the planned mixtures that will be used in the three trial burn tests. The actual feed materials to be used may be hazardous wastes, purchased industrial chemicals or a combination of these which will be spiked with POHCs.

For simplicity, the trial burn heat and mass balance (H&MB) calculations were done using the industrial chemical mixtures described below.

POHCs will be injected into the pumpable waste feed streams at a level of approximately 5-10% by weight of the waste feedrate by metering pumps. Portable tanks on weigh scales will be used as reservoirs for these pumps in order to obtain highly accurate POHC mass feedrates. A 1:1:1:1 mixture of the above POHCs will be used throughout the tests to spike each of the waste streams.

Table 1.4.1
Estimated Trial Burn Feed Compositions

	HHV (Btu/lb)	Chlorine* (wt %)	Ash (wt %)	Water (wt %)
High-Btu Liquid	8,000	10	2	2
Low-Btu Liquid	-0-	Trace	Trace	99
Sludge	8,000	1	15	10
Bulk Solids (Non-energetic)	-0-	-0-	85	15
Containerized Waste				
Test 1 and 2	-0-	-0-	85	15
Test 3	8,000	-0-	5	5

NOTE: These analyses do not include POHCs.

*Chlorine content and feedrate will be adjusted to not exceed the targeted maximum HCl loading of 1,202 lb/hr.

POHCs will also be fed in one-gallon plastic pails inserted into plastic, fiber or steel drums filled with inert solids as containerized waste. The plastic pails will be partially filled with a dry absorbent, and a measured quantity of the POHC mixture will be absorbed onto the solid.

Bulk solids will not have POHCs, but POHCs will be fed in containerized waste simultaneously with bulk solids feed. The feed system will alternate charges of bulk and containerized wastes during Test 1.

1.4.2 Waste Types

Containerized Waste Feed

The non-energetic containerized waste used during Tests 1 and 2 will include soil or a commercially available absorbent such as diatomaceous earth in 55-gallon fiber, plastic or steel drums to which POHCs will be added. The absorbent or soil will be spiked with a known amount of POHC mixture per unit mass of Zorbal or soil (by pouring a preweighed and documented amount of POHC into a one-gallon plastic pail inserted in each drum) to yield an approximate POHC concentration of 2% in the solid material. Each drum will be weighed, analyzed and tagged prior to the start of the trial burn test, and will be kept tightly sealed to avoid any loss of POHC. During the trial burn, the drums will be fed to the kiln through the containerized waste feed gate.

Energetic containerized waste used during Test 3 will consist of wood chips and plastic pellets in fiber, plastic or steel drums to which the one-gallon "POHC pails" will be added. The lids of steel drums will be removed prior to feeding to the kiln.

Bulk Solids Waste Feed

The bulk solids used in the trial burn will be soils having little or no organic content and, therefore, little or no heating value. These wastes will be staged in the bulk solids receiving bins prior to the start of the trial burn. They will be fed to the kiln through the kiln solids feed chute and will not be spiked with POHC.

Since bulk solids and containerized waste will both be fed to the kiln through the feed chute, the simultaneous feeding of these two waste types will only be demonstrated in Test 1.

Sludge Waste Feed

The sludge used in the trial burn may be surrogate sludge waste consisting of a mixture of methanol, ethylene glycol and diatomaceous earth. These wastes will be spiked with POHCs at approximately 10%.

POHCs will be metered into the sludge downstream of the sludge pump before the sludge passes through the feed nozzle, and the flow rate of POHC will be metered using a calibrated flowmeter and weigh scales.

<u>High-Btu and Low-Btu Liquid Waste Feeds</u>

High-Btu and low-Btu liquids fed to the kiln and SCC during the trial burn may be simulated wastes prepared from pure materials. Low-Btu liquid will be essentially water. The high-Btu liquid will contain methanol, ethylene glycol and dichlorophenol to yield an analysis as shown in Table 1.4.1.

POHCs will be injected into the high-Btu and low-Btu liquid waste downstream of the feed pumps and prior to the nozzles or burners. The POHC feedrate will be metered with a calibrated flowmeter and feed tank weigh scale. High-Btu liquid will be spiked with POHCs at approximately 7% by weight, and low-Btu liquid will be spiked at about 5%.

1.4.3 Metals

FFP-LP is taking a multiple waste/single point or "universal" approach to metals feeds, such that the only control parameter will be total feedrate of each metal.

FFP-LP proposes to spike an aqueous metals solution into the low-Btu liquid waste and inorganic filtrate streams with a metering pump and weigh-scale tank (similar to the POHC feed system). High-Btu liquid, sludge, containerized waste and bulk solids streams would not have metals addition.

We propose to test metals removal efficiency only in Test 2, since that test will have the highest kiln operating temperature and the highest chlorine loading. In addition, almost all of the low-Btu liquid (containing metals) will be fed to the SCC. This should be the most extreme case for metals emissions.

The maximum allowable emissions of metals from the incinerator stack and the removal efficiency of the APC system will be determined for Tier III limits for metals listed in the "Guidance on Metals and HCl Controls For Hazardous Waste Incinerators," Volume IV of the Hazardous Waste Incineration Guidance Series, August 1989. Metals listed in this document are antimony, arsenic, barium, beryllium, cadmium, chromium, lead, mercury, silver and thallium. Metal-bearing compounds will be added to the low-Btu liquid waste feed to the incinerator during trial burn Test 2. This test will determine the actual removal efficiency of the APCE for each metal and the maximum emissions of each metal at trial burn test conditions.

Low-Btu liquid waste feed to the kiln and SCC during Test 2 will be spiked with metal compounds containing antimony, arsenic, barium, beryllium, cadmium, chromium, lead, mercury, silver and thallium, as required, such that concentrations of these metals in the wastes used during the test will be at or near the maximum operating levels expected for the incinerator during actual operation.

The SDA makeup water (inorganic filtrate) used during Test 2 will also be spiked with the above-listed metals, such that concentrations of these metals in the water used during the test will be at or near the maximum operating levels expected for the effluent from the inorganic waste treatment system during actual operation.

The feedrates of metals to the incinerator with the low-Btu liquid waste during Test 2 are shown in Table 1.4.3-1 along with the total metals feedrates for the test. The metals content of the filtrate feed to the SDA is shown in Table 1.4.3-2 along with the total metals feedrates to the SDA from the filtrate. The metals contents of the wastes fed to the incinerator during Test 2 were determined from waste analysis and metals emissions data from the Kommunekemi facility in Denmark and from commercial hazardous waste incinerators in the U.S. The feedrate of metals in the SDA makeup water was determined from the expected maximum concentration of metals in the inorganic waste treatment system filtrate during actual operation.

1.4.4 Incinerator Metals Removal Efficiency and Partitioning Coefficients

FFP-LP believes that the assumed removal efficiency of 95% for arsenic, cadmium, antimony, lead and thallium included in the guidance documents for the spray dryer absorber/fabric filter (SDA/FF) system underestimates the actual expected control efficiency of the FFP-LP incinerator and APCE. This is in part because the assumed control efficiency takes no credit for metals removed in the kiln ash, and also because of operating experience from the Kommunekemi incinerator in Nyborg, Denmark with a similar APCE. It is expected that the incinerator and APCE will be capable of achieving a minimum removal efficiency of 98% for the above-listed metals. FFP-LP is, therefore, proposing to demonstrate during trial burn operation that a minimum removal efficiency of 98% will be achieved.

SDA/FF systems are highly efficient in removing fine particulate and particulate metal emissions from the incinerator combustion gas stream. The metals removal efficiency is designed to be greater than

- 99% for barium, silver, chromium and beryllium
- 98% for lead, cadmium, arsenic, thallium and antimony
- 90% for mercury

The maximum feedrates of carcinogenic metals to the incinerator, included in Tables 1.4.3-1 and 1.4.3.2, are limited by Tier III emission limits from the metals emission guidance calculated from the above assumed control efficiencies of the SDA/FF. It is expected that some shipments of metal-containing wastes received by FFP-LP will contain higher metal concentrations than those to which the incinerator would be limited based on these assumed efficiencies. These wastes will be blended to lower the metal concentrations.

Table 1.4.3-1
Approximate Feedrates of Metals in Low-Btu Liquid Waste Used in Test 2

Element	Rate of Element lb/hr	Salt	Salt Rate lb/hr
CARCINOGENIC METALS			
Arsenic (As)	4.59	As_2O_3	6.06
Beryllium (Be)	0.091	$BeCl_2$	0.812
Cadmium (Cd)	8.29	$CdCl_2$	13.53
Chromium (Cr)	4.96	Cr_2O_3	7.25
NON-CARCINOGENIC METALS			
Antimony (Sb)	125	Sb_2O_3	149.7
Barium (Ba)	49.9	$BaCl_2$	75.7
Lead (Pb)	45.0	$PbSO_4$	65.9
Mercury (Hg)	2.92	$HgSO_4$	4.32
Silver (Ag)	49.7	$AgNO_3$	78.2
Thallium (Tl)	41.4	$TlNO_3$	53.96
	Total Salt Rate		455.4 lb/hr

Table 1.4.3-2
Approximate Feedrates of Metals in SDA Makeup Water Used in Test 2

Element	Rate of Element lb/hr	Salt	Salt Rate lb/hr
CARCINOGENIC METALS			
Arsenic (As)	0.100	As_2O_3	0.164
Beryllium (Be)	0.00050	$BeCl_2$	0.0044
Cadmium (Cd)	0.00125	$CdCl_2$	0.0020
Chromium (Cr)	0.0050	Cr_2O_3	0.0073
NON-CARCINOGENIC METALS			
Antimony (Sb)	0.125	Sb_2O_3	0.150
Barium (Ba)	0.0250	$BaCl_2$	0.038
Lead (Pb)	0.125	$PbSO_4$	0.183
Mercury (Hg)	0.000625	$HgSO_4$	0.00091
Silver (Ag)	0.00250	$AgNO_3$	0.0039
Thallium (Tl)	0.00250	$TlNO_3$	0.0032
		Total Salt Rate	0.557 lb/hr

Therefore, metal-containing wastes would have to blended with low-metal-concentration wastes in order to meet the calculated hourly design metals feedrates at the assumed efficiency. Design metals feedrates proposed as permit conditions have been modified from expected hourly metals feedrates based on Tier III limitations.

FFP-LP will also determine the metals APCE partitioning coefficients during the trial burn. A significant portion of certain metals, particularly chromium, may be discharged from incinerators with the rotary kiln bottom ash rather than through the APCE and stack. EPA estimates of metals partitioning are contained in Table III-9 of "Guidance on Metals and Hydrogen Chloride Controls for Hazardous Waste Incinerators." FFP-LP has conservatively assumed, for the purposes of metals emissions calculations and designing trial burn conditions, that 100% of all metals fed to the incinerator are discharged to the APCE, and that none are discharged with the kiln ash.

1.5 QUANTITY OF WASTE TO BE BURNED

Wastes fed to the kiln and SCC during the trial burn runs will be simulated wastes prepared from industrial chemicals or actual wastes spiked with POHCs. The wastes for Tests 1, 2 and 3 of the trial burn are described in Section 1.4.

The amount of waste and POHCs fed to the kiln and SCC during each of the three tests is summarized in Table 1.5.1 for each waste feed. The amount of waste required for each test was calculated based on the nominal mass feedrate of the stream, the density of the stream (if needed) and a 20-hour feed duration. This duration is six hours longer than the planned test time of 14 hours; this is intended to provide for spare feed as a contingency. Table 1.5.2 compares the trial burn maximum feedrates with the feed system mechanical design feedrates.

1.6 DEMONSTRATED PERMIT PARAMETERS AND EXPECTED PERMIT CONDITIONS

1.6.1 General

The three trial burn tests are designed to demonstrate various incineration system parameters, so that these demonstrated parameters can be used to establish an operating envelope to be specified in the Operating Permit. The tests are planned by using our best engineering judgement (BEJ) as specified in the regulations.

The system parameters planned for demonstration in this series of three tests and the corresponding expected permit conditions are shown in Table 1.6. The trial burn will also demonstrate

- Compliance with the 99.99% DRE requirements for the POHCs as specified in 40 FR 264.343

Table 1.5.1
Trial Burn Waste Feed Requirements by Test[1]

	Test 1	Test 2	Test 3	Total (All Trial Burns)
Low-Btu Liquid[2]	1,140 gal	12,545 gal	1,140 gal	14,825 gal
High-Btu Liquid[2]	17,815 gal	1,675 gal	1,115 gal	20,610 gal
Sludge[3]	1,020 gal	16,920 gal	510 gal	18,450 gal
Containerized Waste[4] (55/85 gal drums)	800 drums	200 drums	800 drums	1,800 drums
Bulk Solids/Containerized Waste	490,000 lb	19,600 lb	162,000 lb	671,600 lb
POHC[5]	1,865 gal	1,935 gal	1,620 gal	5,420 gal

---

[1] Based on 20 hours of operation per test

[2] Assumed specific gravity: 0.99

[3] Assumed specific gravity: 1.06

[4] Based on approximately 125 lb/drum @ 90 lb/ft^3 for Test 1, 100 lb/drum for Test 2 and 200 lb/drum for Test 3

[5] Approximate specific gravity: 1.46

Table 1.5.2
Trial Burn and Mechanical Design Feedrate Limits - lb/hr

Stream Name	Trial Burn Feedrate, Maximum lb/hr[2]		Mechanical Design Feedrate, Maximum lb/hr	
	Kiln	SCC	Kiln	SCC
High-Btu Liquid	4,000	4,000	5,000	5,500
Low-Btu Liquid	2,000	3,500	5,000	5,000
Non-Energetic Containerized Waste[1]	25,000	0	39,000	0
Energetic Containerized Waste	9,000	0	39,000	0
Sludge	8,300	0	10,000	0
Bulk Solids[1]	25,000	0	39,000	0

---

[1] A total solids feedrate of 25,000 lb/hr will be demonstrated during trial burn Test 1.
[2] Includes POHC feedrate.

Table 1.6
Proposed Permit Parameters and Expected Permit Conditions

Group Designation[1]	Permit Parameter	Expected Condition	Test Where Condition Established[2]	Comments
A	Minimum temperature measured at combustion chamber exit:			
	Kiln	1400°F, 1-hr time-weighted rolling average	1	
	SCC	1800°F	1, 2, 3	
A	Maximum CO emissions measured at the stack (corrected for dilution)	<100 ppm (corrected to 7% O_2), 1-hr time-weighted rolling average	1, 2, 3	Trial burn to demonstrate <100 ppm for 1-hr rolling average; however, this permit limit is based upon EPA guidance, not actual trial burn results.
A	Maximum combustion gas flow rate measured at the stack	81,000 acfm @ 375°F (15 sec)	3	
A	Maximum combustion chamber pressure	Maintain negative draft (30 seconds)	1,2,3	Designed as negative draft system. Trial burn will demonstrate that negative draft is maintained.
A	Minimum pressure differential across baghouse	1" wc	1, 2, 3	Based upon manufacturer's performance data with clean bags

Table 1.6
Proposed Permit Parameters Expected Permit Conditions (Cont.)

Group Designation[1]	Permit Parameter	Expected Condition	Test Where Condition Established[2]	Comments
A	Maximum waste feedrate (1-hr time-weighted rolling average): Bulk solids/containerized waste to kiln Low-Btu liquid to kiln/SCC High-Btu liquid to kiln/SCC Sludge to kiln	 25,000 lb/hr 5,500 lb/hr 8,000 lb/hr 8,300 lb/hr	 1 2 1 2	**NOTE:** These values are not necessarily design maxima, but are instead expected maxima during the trial burn. The permit limits will reflect actual trial burn results.
A	Maximum HCl emissions measured at the stack	100 ppm, 1-hr time-weighted rolling average	2	
B	Maximum total halides feedrate	1,202 lb/hr	2	Based upon total trial burn organic chlorine feedrate. (No other halides are anticipated at appreciable levels during the trial burn.)
B	Maximum inorganic ash feedrate	21,500 lb/hr	1	Total for all streams
B	Maximum metals feedrates:[3] • Antimony • Arsenic • Barium • Beryllium • Cadmium • Chromium • Lead • Mercury • Silver • Thallium	 125 lb/hr 4.69 lb/hr 49.9 lb/hr 0.091 lb/hr 8.29 lb/hr 4.97 lb/hr 45.1 lb/hr 2.92 lb/hr 49.7 lb/hr 41.4 lb/hr	2	

Table 1.6
Proposed Permit Parameters Expected Permit Conditions (Cont.)

Group Designation[1]	Permit Parameter	Expected Condition	Test Where Condition Established[2]	Comments
B	Least incinerable POHC H_C incinerability ranking $TSLoO_2$ incinerability ranking	Carbon tetrachloride (0.24 kcal/g) Chlorobenzene (Class 1)	1,2,3 1,2,3	Use of two ranking systems, i.e., heat of combustion (H_C) and thermal stability under low oxygen ($TSLoO_2$), should allow incineration of any Appendix VIII organic compound.
B	Maximum size of containerized waste to kiln	85 gal	3	Maximum size of drums fed during trial burn
C	Maximum total heat input capacity: Kiln SCC Kiln/SCC (entire system)	 75 MM Btu/hr 40 MM Btu/hr 75 MM Btu/hr	 – – –	Manufacturer's ratings
C	Maximum organic waste viscosity for SCC burners	150 SSU @ 100°F	–	Manufacturer's ratings
C	Maximum SCC burner turndown ratio (firing rate range for each burner)	4:1 on liquids	–	Manufacturer's ratings
C	Minimum atomization fluid (air or steam) pressure for SCC organic waste burners	20 psi	–	Manufacturer's ratings
C	Maximum gas temperature at SDA inlet	2400°F (15 sec)	–	Manufacturer's rating (measured at SCC exit)

---

[1] From "Guidance on Setting Permit Conditions and Reporting Trial Burn Results," Vol. II of the Hazardous Waste Incineration Guidance series, January, 1989.

Table 1.6

Proposed Permit Parameters Expected Permit Conditions (Cont.)

Group A parameters are continuously monitored parameters interlocked with waste feed cutoff. Waste feed cutoff is activated only after a specified time of continuous noncompliance.

Group B parameters do not require continuous monitoring and are thus not interlocked with waste feed cutoff systems. Operating records are nevertheless required to ensure that trial burn worst-case conditions are not exceeded.

Group C parameter limits are set independently of trial burn test conditions. Instead, limits are based on equipment manufacturers' design and operating specifications and are thus considered good operating practices. Selected parameters do not require continuous monitoring and are not interlocked with the waste feed cutoff system.

[2] This is the trial burn test in which the permit parameter is expected to be established. The permit limits will reflect the actual trial burn results.

[3] This includes metals in waste feeds and inorganic filtrate to the SDA.

- Compliance with the draft standards for maximum metals emissions from hazardous waste incinerators and metals removal efficiency of the APCE for metals listed in the draft standards

- Compliance with the 99% HCl removal efficiency as specified in 40 CFR 264.343 and the draft standards for hydrogen chloride (HCl) emissions from hazardous waste incinerators

- The incineration system operational control parameters (maximums, minimums, and/or acceptable operating ranges) for all the significant incineration system variables as required by 40 CFR 264.345

Per the "Guidance On Setting Permit Conditions And Reporting Trial Burn Results," Volume II Of The Hazardous Waste Incineration Guidance Series, January, 1989, FFP-LP is taking the multiple waste/single condition or "universal" approach for planning the trial burns. It is not possible to achieve maximum feedrates for all streams simultaneously, and therefore three tests are necessary.

See Table 1.6 for a clear presentation of the overall trial burn goals. The parameters to be demonstrated in each test are described below.

1.6.2 Test 1

Test 1 is designed to demonstrate the following (see Figure 1.6.2):

- Maximum solids (bulk solids and containerized waste) throughput to kiln (25,000 lb/hr)
- Maximum high-Btu liquid throughput to kiln and SCC (8,000 lb/hr)
- Minimum kiln temperature (1400°F)
- Maximum ash loading (21,500 lb/hr)
- Simultaneous feed of every waste stream (sludge to kiln, bulk solids/containerized wastes to kiln, low-Btu and high-Btu liquid to kiln and SCC)

1.6.3 Test 2

Test 2 is designed to demonstrate the following (see Figure 1.6.3):

- Maximum low-Btu liquid throughput to kiln and SCC (5,500 lb/hr)
- Maximum sludge throughput to kiln (8,300 lb/hr)
- Minimum SCC temperature (1800°F)
- Maximum chlorine loading (1,202 lb/hr)
- Maximum metals loading
- Simultaneous feed of every waste stream (sludge to kiln, bulk solids/containerized wastes to kiln, low-Btu and high-Btu liquid to kiln and SCC)

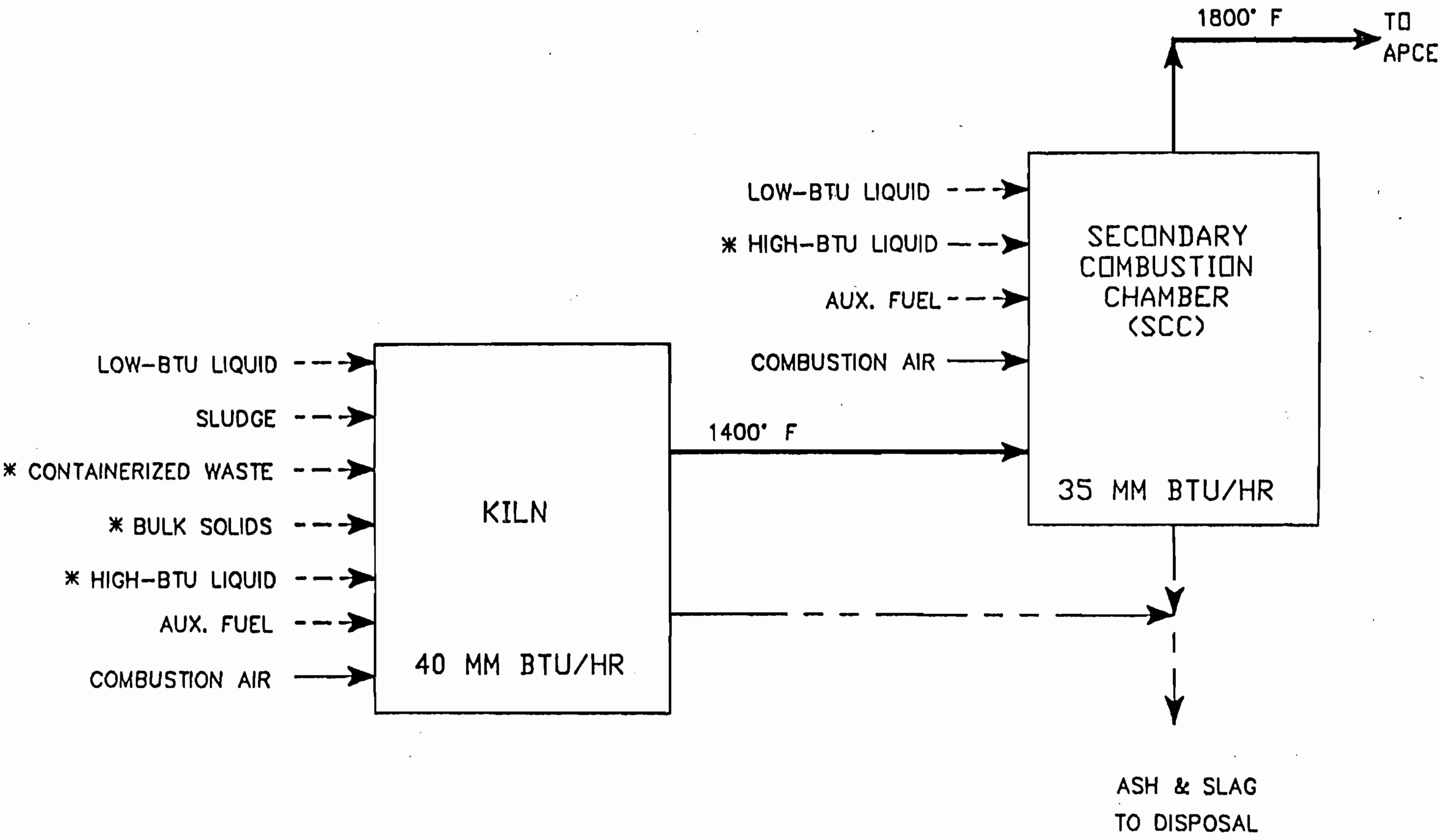

Figure 1.6.2
Test 1 Conditions

* MAXIMUM THROUGHPUT

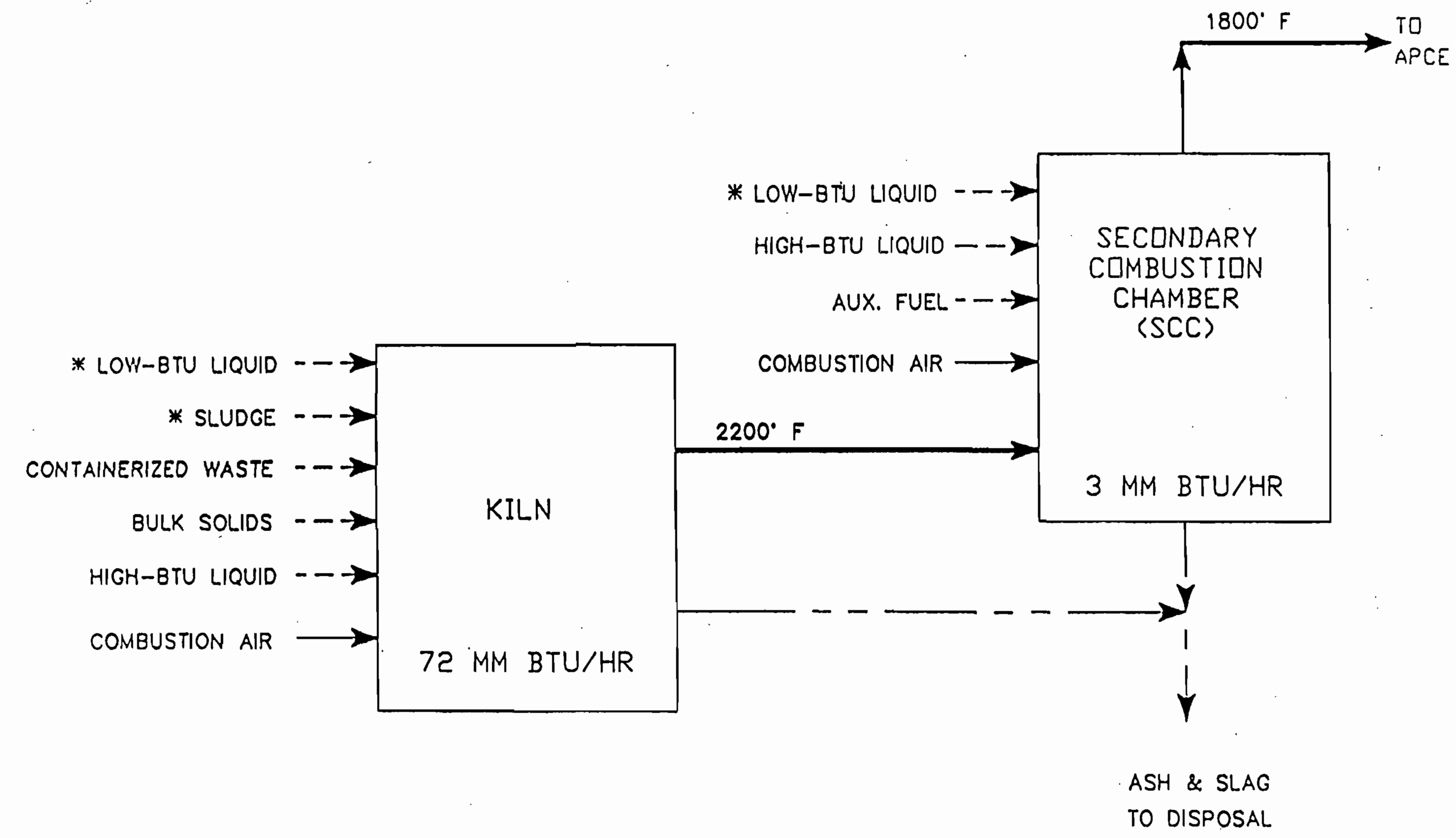

Figure 1.6.3
Test 2 Conditions

* MAXIMUM THROUGHPUT

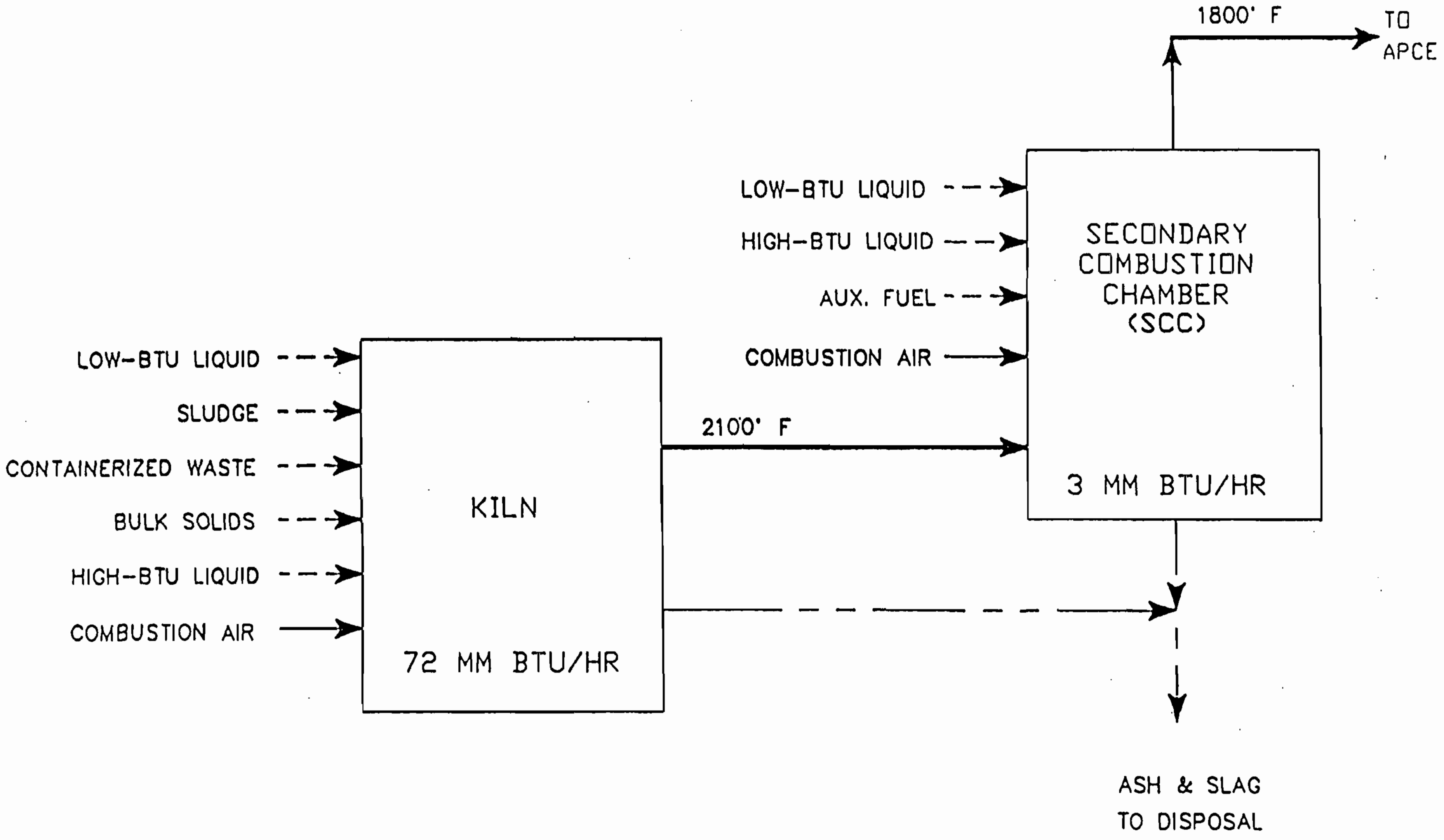

Figure 1.6.4
Test 3 Conditions

1.6.4 Test 3

Test 3 is designed to demonstrate the following (see Figure 1.6.4):

- Maximum combustion gas flow/minimum SCC gas residence time (71,000 acfm/2 sec)
- Simultaneous feed of every waste stream (sludge to kiln, bulk solids/containerized wastes to kiln; low-Btu and high-Btu liquid to kiln and SCC)
- Maximum energetic containerized waste parcel size
- Feed of energetic containerized waste in steel drums

The operating parameters that are not appropriate for measurement during trial burn operations and will be based upon BEJ, equipment performance, manufacturer's design, and operating and engineering specifications are as follows:

- Maximum CO concentration in combustion gas (100 ppm)
- Maximum HCl concentration in combustion gas (100 ppm)
- Minimum O_2 concentration in combustion gas (3%)
- Minimum combustion chamber pressure
- Minimum fabric filter differential pressure
- Maximum kiln outlet temperature (2400°F)
- Maximum temperature of inlet gas to APCE (2400°F)
- Sources of liquid waste feeds to kiln burner, kiln nozzles and SCC burners

1.7 TRIAL BURN TEST CONDITIONS

1.7.1 General

The trial burn test conditions have been designed to allow for possible changes in waste characteristics and operating scenarios in the future. The trial burn waste feed compositions will attempt to introduce the highest amount of organic chlorine, metals and ash as well as the least-incinerable POHCs anticipated in the future. Operating conditions have been selected to present worst-case scenarios, as far as the performance standards are concerned, in order to achieve the maximum operating envelope for the permit.

Three trial burn tests have been selected to demonstrate a wide range of incinerator facility capabilities and operating limits. These detailed test protocols include variations in waste feed types, compositions and rates; combustion gas velocities and temperatures; use of auxiliary fuel; and other parameters that may affect the POHC, DRE and the metals removal efficiency of the incineration facility. The planned test conditions of these three trial burn tests are summarized in Tables 1.7.1-1 through 1.7.1-5.

The planned test protocols are based on detailed material and energy balances. Independent parameters that can be controlled are waste feed types, feedrates, feed composition, auxiliary fuel rate and excess air (or combustion air flow rate) in both the rotary kiln and the SCC. Dependent variables include combustion gas flow rates (or gas residence time), residual O_2 levels, operating temperatures and flue gas composition. Since the simultaneous achievement of a specific set of operating conditions, such as temperature, residence time, residual O_2 levels and waste feedrates, requires very specific feed compositions and heating values, several of the waste feeds planned for this program are manufactured mixtures that simulate the worst-case examples expected during the burning of actual wastes during full-scale operation of the incinerator.

1.7.2 Test 1

In this test, bulk solids (soil) and non-energetic containerized waste will be fed to the kiln at the maximum feedrate of 25,000 lb/hr. Minimum kiln and SCC combustion gas outlet temperatures of approximately 1400°F and 1800°F, respectively, will be maintained. High-Btu liquid waste will be used to provide the supplementary thermal input to the kiln and the SCC to maintain these temperatures. These and the other operating conditions of this test are summarized in Table 1.7.1-1.

This test is primarily intended to demonstrate the ability of the incinerator to achieve 99.99% or greater DRE when burning POHC at the minimum kiln and SCC temperatures of 1400°F and 1800°F, respectively, and the minimum SCC gas residence time. This test is also intended to demonstrate the development of the maximum thermal capacity of the incinerator and the ability of the kiln to process the maximum solids feedrate. The test will also show that the APCE is able to handle the heavy particulate loading that likely would be generated by such a feed scenario. Soils having little or no heating value and very high ash content have been selected for this test because they can be fed at the maximum solids feedrate without being constrained by the thermal capacity of the kiln.

1.7.3 Test 2

In this test, sludge and low-Btu liquid will be fed to the kiln at maximum feedrates. Low-Btu liquid will be supplied to the SCC nozzle, and energetic liquid will be supplied to the SCC burners.

No auxiliary fuel will be used in the kiln burner during this test. A combustion gas temperature of approximately 2200°F will be maintained at the outlet of kiln. The containerized waste will be spiked with approximately 2% POHC and the pumpable waste feed will be spiked with approximately 5-10% POHC.

This test is designed to demonstrate several features of the incinerator. First, it will demonstrate the ability of the kiln to physically handle and achieve a DRE of 99.99% or greater while burning a combination of wastes. During full-scale operation, a myriad of other combinations of waste types and feedrates will be employed, but none will stress the incinerator any more than the conditions proposed for this test. Second, this test will demonstrate the development of the full

Table 1.7.1-1

Summary of Trial Burn Incinerator Estimated Operating Conditions

Test		1			2			3	
Outlet Temperature, °F									
Rotary Kiln		1,400			2,200			2,100	
SCC		1,800			1,800			1,800	
Exit Volume, acfm									
SCC		100,950			101,700			118,500	
Stack		59,100			61,500			70,850	
SCC Residence Time, Sec.		2.9			2.9			2.5	
SCC Outlet, % O_2		6.9			8.3			11.0	
Heat Input, MM Btu/hr	Waste	Aux. Fuel	Total	Waste	Aux. Fuel	Total	Waste	Aux. Fuel	Total
Rotary Kiln	40.15	0	40.15	71.94	0	71.94	71.98	0	71.98
SCC	33.35	1.50	34.85	2.99	0	2.99	2.16	1.00	3.16
Total	73.50	1.50	75.00	74.93	0	74.93	74.14	1.00	75.14
HCl loading, lb/hr		1,023			1,202			703	
Total waste/POHC feeds, lb/hr		33,980			15,550			10,250	
Auxiliary fuel feed, lb/hr		79			0			53	

Table 1.7.1-2
Summary of Rotary Kiln Estimated Operating Conditions

Test	1	2	3
Containerized Wastes			
Heating Value, Btu/lb	514	100	7,534
Feedrate, lb/hr	5,000	1,000	9,000
Heat Input, MM Btu/hr	2.57	0.10	67.8
Bulk Solids			
Heating Value, Btu/lb	0	0	0
Feedrate, lb/hr	20,000	0	0
Heat Input, MM Btu/hr	0	0	0
High-Btu Liquid			
Heating Value, Btu/lb	8,370	8,370	8,370
Feedrate, lb/hr	4,000	500	250
Heat Input, MM Btu/hr	33.46	4.18	2.07
Low-Btu Liquid			
Heating Value, Btu/lb	260	260	260
Feedrate, lb/hr	250	2,000	250
Heat Input, MM Btu/hr	0.06	0.51	0.06
Sludge			
Heating Value, Btu/lb	8,090	8,090	8,090
Feedrate, lb/hr	500	8,300	250
Heat Input, MM Btu/hr	4.04	67.14	2.02
Auxiliary Fuel Input, MM Btu/hr	0	0	0
Total Kiln Heat Input, MM Btu/hr	40.15	71.94	71.98
Exit Gas Temperature, °F	1400	2200	2100

Note: All the above heating values and feedrates include POHC.

Table 1.7.1-3
Summary of SCC Estimated Operating Conditions

Test	1	2	3
High-Btu Liquid Waste			
Heating Value, Btu/lb	8,370	8,370	8,370
Feedrate, lb/hr	3,980	250	250
Heat Input, MM Btu/hr	33.29	2.02	2.02
Low-Btu Liquid Waste			
Heating Value, Btu/lb	260	260	260
Feedrate, lb/hr	250	3,500	250
Heat Input, MM Btu/hr	0.06	0.89	0.06
Aux. Fuel Heat Input, MM Btu/hr	1.5	0	1.0
SCC Heat Input, MM Btu/hr	34.85	2.99	3.16
Total System Heat Input, MM Btu/hr	75.00	74.93	75.14
Exit Gas O_2, dry, % (vol.)	6.9	8.3	11.0
Exit Gas Temperature, °F	1,800	1,800	1,800
SCC Gas Residence Time, sec.	2.9	2.9	2.5
Stack Gas Flow, acfm	59,100	61,500	70,850
HCl Loading to APCE, lb/hr	1,023	1,202	703

Table 1.7.1-4
Trial Burn Feed Streams (Waste and POHC)
Mass Feedrates - lb/hr

Stream Name	Test 1		Test 2		Test 3	
	Kiln	SCC	Kiln	SCC	Kiln	SCC
High-Btu Liquid	4,000	3,980	500	250	250	250
Low-Btu Liquid	250	250	2,000	3,500	250	250
Sludge	500	0	8,300	0	250	0
Containerized Waste	5,000	0	1,000	0	9,000	0
Bulk Solids	20,000	0	0	0	0	0
Total	29,750	4,230	11,800	3,750	9,750	500

Table 1.7.1-5
Estimated APCE Operating Conditions for Trial Burn Tests

Operating Parameter	Test 1	Test 2	Test 3
SDA			
Inlet Gas Flow, acfm	100,950	100,700	118,500
Inlet Gas Temperature, °F	1,800	1,800	1,800
Lime Slurry Flow, gpm	90	93	102
Pressure Drop, "H_2O	3-5"	3-5"	3-5"
Liquid to Gas Ratio, gal/1,000 acfm	0.89	0.92	0.86
Lime Slurry pH	> 10	> 10	> 10
Fabric Filter			
Outlet Gas Flow, acfm	59,100	61,500	70,850
Inlet Gas Temperature, °F	370	370	370
Pressure Drop, "H_2O	2-8	2-8	2-8

thermal capacity of the kiln and SCC. Third, it will demonstrate the feeding of the maximum amount of organic chlorine and metals to the system.

Additionally, this test will be used to address two other environmental concerns: potential air emissions of polychlorinated dibenzodioxins (PCDDs) and polychlorinated dibenzofurans (PCDFs) and emissions of metals. The concentrations of PCDDs and PCDFs in the stack gas, kiln ash and APCE residues will be measured to demonstrate that the incinerator will not generate significant amounts of these compounds. The low-Btu liquid waste feed to the SCC and kiln will be spiked with metals, as required, such that the maximum feedrates of metals in Tables 1.4.3-1 and 1.4.3-2 are achieved. The concentrations of metals will be measured in the waste feeds and stack gas emissions to determine the maximum emission rates of metals and removal efficiency of the APCE for metals.

1.7.4 Test 3

In this test, all waste types will be simultaneously fed to the kiln and the SCC to develop the full thermal capacity of the total system. Energetic containerized waste will be fed to the kiln at the maximum feedrate.

No auxiliary fuel will be burned in the kiln during the test. Combustion gas temperatures of 2100°F and 1800°F will be maintained at the outlet of kiln and SCC, respectively, and a maximum stack gas flow rate will be generated. The feeds will be spiked with POHCs as for Test 2.

This test will demonstrate the ability of the kiln to handle and burn a combination of simultaneously fed wastes, the operation of the incinerator at the maximum waste feedrate, and the achievement of DREs of 99.99% or greater for four different POHCs.

1.8 SCHEDULE AND DURATION OF TESTS

1.8.1 Introduction

In accordance with 40 CFR 270.62(b)2(iv), this section discusses the test schedule of the trial burn and includes the following:

- Date(s) for the trial burn
- Duration and schedule

1.8.2 Date(s) for the Trial Burn

Since the incinerator has yet to be constructed, a calendar date for the start of the trial burn cannot be defined at this time; however, the trial burn will be planned to begin at the completion of the operational readiness pre-trial period allowed under the provisions of 40 CFR 270.62(a). This pre-trial period is limited to 720 hours of operation with hazardous waste upon completion of physical construction of the incinerator. This period allows for calibration or shakedown of all process equipment and instruments prior to the start of the trial burn. Upon satisfactory completion of the operational readiness pre-trial period, the trial burn will start.

1.8.3 Duration and Schedule

Three tests are planned during the trial burn, as discussed in detail in Section 1.6. For each test with its unique set of case conditions, three runs are planned with steady-state operating conditions. Each run will involve sampling, data gathering, analysis and review for performance within the objectives of each test. The three runs for each test will help to address system variability under fixed operating constraints.

The schedule for the trial burn is summarized by day in Table 1.8. The first two days of the trial burn are reserved for incinerator warm-up, setup of sampling equipment and instrumentation, and determination of stack velocity profiles. The third, fourth and fifth days are reserved for the Test 1 runs. A feed startup period is initially scheduled for up to 45 minutes. Three runs are planned; each run is three hours in duration with up to a one-hour port change.

The actual Test 1 runs are estimated to last 16 hours over three days. After completion of the test, the incinerator will be maintained at temperature by heating with auxiliary fuel or high-Btu liquid. The sixth day is reserved for tabulation and filing of data, along with labeling and re-storage of sample bottles from the Test 1 runs on the previous day. The preparation of the feed materials for Test 2 is also performed on the sixth day. Test 2 (with three runs) is performed on days seven, eight and nine in a manner like days three, four and five. Day 10 is reserved for data and sample recovery from the Test 2 runs in a manner like day six, except with the preparation of feeds for Test 3. The three Test 3 runs are performed on days 11, 12 and 13, again like days three, four and five. On day 14, data and sample recovery from the Test 3 runs are performed. Equipment is then packed and the trial burn is completed.

1.9 REPORTING OF TRIAL BURN TEST RESULTS

The results of the three tests are intended to demonstrate compliance with requirements for the POHC, DRE, HCl removal efficiency and particulate emissions as specified in 40 CFR 264.343, while establishing the incineration system limiting operation parameters (maximums, minimums and/or acceptable operating ranges) for all the significant incineration system variables as required by 40 CFR 264.345.

The final Trial Burn Report will be submitted to the Florida DER within 90 days after the completion of the trial burn. At the time of submission, a copy of the following records will be included:

Table 1.8
Trial Burn Schedule

Day Number	Test	Run	Activity
1	-	-	Incinerator warm-up with auxiliary fuel
2	-	-	Set up sampling equipment
3	1	-	45 minute startup with test feed
3	1	1-1	Run 1-1 (3 hours plus 1 hour for port change). Incinerator temperature maintained after run with auxiliary fuel or liquid waste
4	1	-	45 minute startup with test feed
4	1	1-2	Run 1-2 (3 hours plus 1 hour for port change). Incinerator temperature maintained after run with auxiliary fuel or liquid waste
5	1	-	45 minute startup with test feed
5	1	1-3	Run 1-3 (3 hours plus 1 hour for port change). After completion of the run, incinerator fired on auxiliary fuel or liquid waste in preparation for next test.
6	1	-	Data recovery for Test 1; instrument and feed preparation for Test 2
7	2	-	45 minute startup with test feed
7	2	2-1	Run 2-1 (3 hours plus 1 hour for port change). After completion of the run, incinerator fired on auxiliary fuel or liquid waste fuel in preparation for next run.
8	2	-	45 minute startup with test feed
8	2	2-2	Run 2-2 (3 hours plus 1 hour for port change). Incinerator temperature maintained after run with auxiliary fuel or liquid waste in preparation for next test
9	2	-	45 minute startup with test feed
9	2	2-3	Run 2-3 (3 hours plus 1 hour for port change). Incinerator temperature maintained after run with auxiliary fuel or liquid waste
10	2	-	Data recovery for Test 2; instrument and feed preparation for Test 3
11	3	-	45 minute startup with test feed
11	3	3-1	Run 3-1 (3 hours plus 1 hour for port change) After completion of the run, incinerator fired on auxiliary fuel or liquid waste fuel in preparation for next run
12	3	-	45 minute startup with test feed

Table 1.8
Trial Burn Schedule (Cont.)

Day Number	Test	Run	Activity
12	3	3-2	Run 3-2 (3 hours plus 1 hour for port change) Incinerator temperature maintained after run with auxiliary fuel or liquid waste
13	3	-	45 minute startup with test feed
13	3	3-3	Run 3-3 (3 hours plus 1 hour for port change) After completion of the run, incinerator fired on auxiliary fuel or liquid waste fuel
14	3	-	Data recovery for Test 3; pack sampling equipment and instrumentation and samples; completion of trial burn

- Copies of all field data sheets, including incinerator monitoring log sheets and stack sampling records

- Copies of all laboratory analysis worksheets, including chromatogram results, lab worksheets for particulate and filter weights and chloride concentration

- Results of all equipment calibrations, including dry gas meters, sampling nozzle diameters and all process flow meters

This Trial Burn Report will contain an introduction, a description of process operations, a description of sampling and analysis techniques, and summary of test results. All data referred to in this TBP will be discussed in the report. Additional reporting requirements and project deliverables to be included in the report are discussed in the QAPP, Attachment D-6-6.

2.0 SAMPLING, MONITORING AND ANALYSIS PROCEDURES

NOTE: This is a preliminary Sampling, Monitoring and Analysis Plan. The revised plan will be submitted at a later date when the trial burn sampling, monitoring and analysis contractor is selected.

2.1 GENERAL

This section presents the overall sampling, monitoring and analysis procedures to be utilized during the trial burn. The testing program will determine the DRE for each of the four volatile and semivolatile POHCs, as well as emissions data for other pollutants as specified.

Individual and composite samples will be collected from the waste feeds, selected process streams and flue gas during each of the three tests to be conducted at the facility. The specific sampling and monitoring locations, equipment and frequencies are presented in Sections 2.2 through 2.3.2. Section 4 describes the analytical procedures in detail.

2.2 SAMPLING AND MONITORING LOCATIONS

Table 2.2-1 and Drawing 8813-00-F-017 indicate the sampling points for each stream which will be sampled during the trial burn. The locations of the process monitoring sensors are indicated on Table 2.2-3 and Drawing 8813-00-F-017.

2.2.1 Flue Gas Samples

The gas stream will be sampled for the designated set of POHCs: carbon tetrachloride (CCl_4), chlorobenzene (C_6H_5Cl), tetrachloroethylene (C_2Cl_4) and 1-2-4 trichlorobenzene ($C_6H_3Cl_3$). It will also be sampled for HCl, particulates and metals using five distinct sampling trains: the MM5 (M5-SV) sampling train, the M5 particulate/HCl sampling train (M5-P), the VOST train, the Multiple Metals Train (M5-M) and the M3 sampling train.

The 5'-6"-ID stack is 200' high with two sets of sampling ports located at two different heights (see Figure 2.2.1). The first set of four ports, which are at right angles to each other, is located about 12 diameters (approximately 69') above the combustion gas inlet. A second set of four ports is located 47' above the first set of four ports.

The equipment requirements for sampling the flue gas and the frequency of measuring its parameters are discussed in Table 2.2-2.

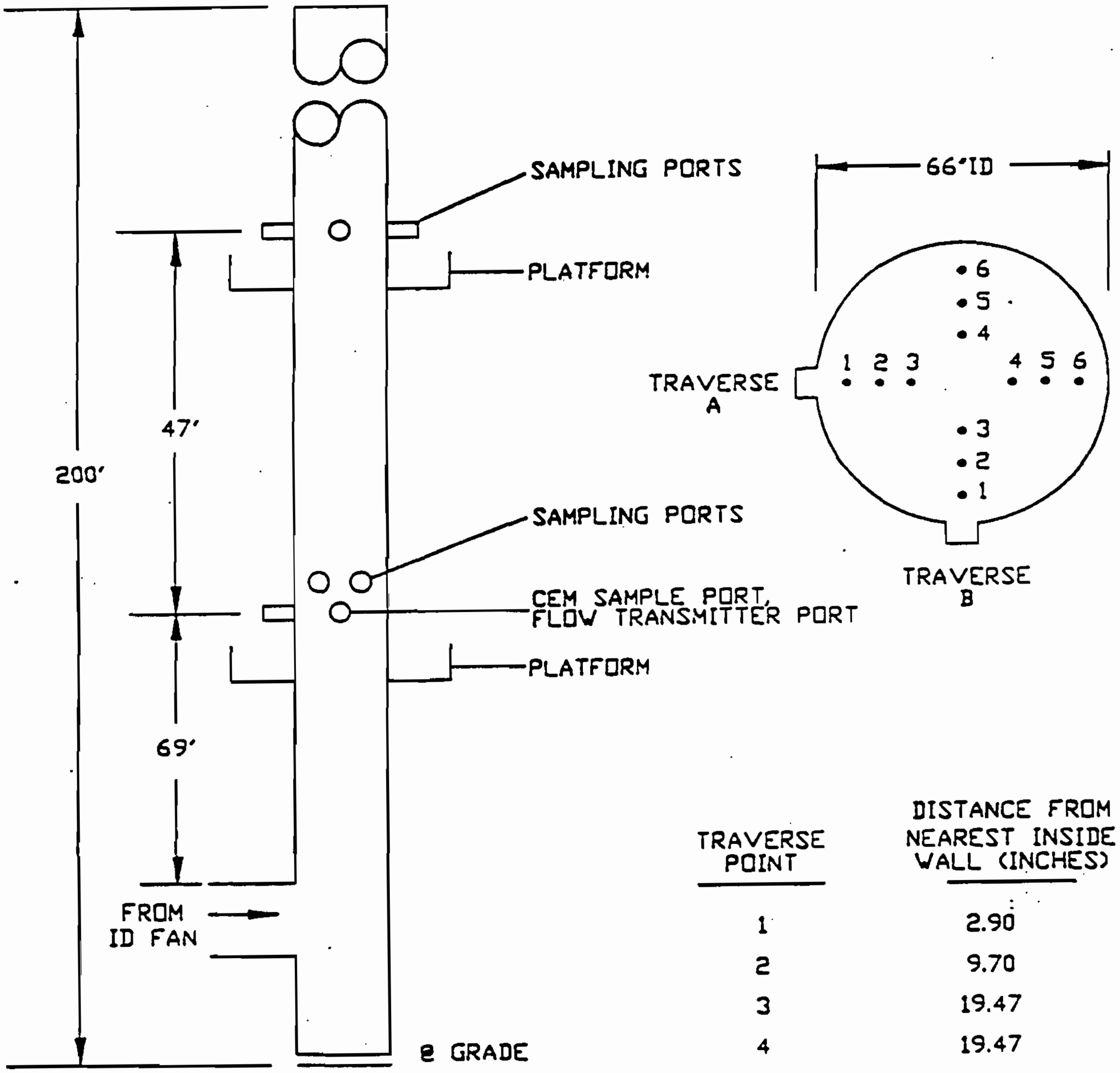

TRAVERSE POINT	DISTANCE FROM NEAREST INSIDE WALL (INCHES)
1	2.90
2	9.70
3	19.47
4	19.47
5	9.70
6	2.90

Figure 2.2.1
Location of Stack Sampling Ports and Traverse Points

Table 2.2-1
Process Stream Sampling and Analysis Scheme
For 3 Tests with 3 Runs Per Test

Sample Type/Location[1]	Sampling Method	Trial Burn Tests	Frequency of Sampling for Each Run[6]	Analysis[2]	Analytical Method
1. Bulk Solids Feed	Scoop (S007)	1 & 3	Two 100-g grab samples every hour composited into two samples at end of run	Composition[3] Heating Value Metals [4] POHCs	ASTM method D3176 ASTM D2015-85 SW-846 method 7000 SW-846 method 8010
2. Containerized Waste Feed	Scoop (S007)	1, 2 & 3	Two 200-g grab samples during feed preparation	Composition[3] Heating Value Metals POHCs	ASTM method D3176 ASTM D2015-85 SW-846 method 7000 SW-846 method 8010
3. Fuel Oil	Tap (S004)[5]	1, 2 & 3	Two 100-ml grab samples and one 40-ml VOA vial every 15 minutes composited into three samples at end of run	Composition[3] Density Viscosity Heating Value Metals POHCs	ASTM method D3176 ASTM D-4052 ASTM D-88-81 ASTM D2015-85 SW-846 method 7000 SW-846 method 8010
4. High-Btu Liquid Feed	Tap (S004)[5]	1, 2 & 3	Two 100-ml grab samples and one 40-ml VOA vial every 15 minutes composited into three samples at end of run	Composition[3] Density Viscosity Heating Value Metals POHCs	ASTM method D3176 ASTM D-4052 ASTM D-88-81 ASTM D2015-85 SW-846 method 7000 SW-846 method 8010

1. See Drawing 8813-F-017.
2. Not including additional quality control analyses.
3. Composition includes C, H, O, N, S, Cl, F, ash and moisture.
4. Metals sampling and analysis will only be done for Test 2.
5. A003, S004 and S007 methods are from "Sampling Methods for Hazardous Waste Incinerators," first edition.
6. Only one grab sample will be needed for Test 1 and 3. Test 2 will require a second grab sample for metals.

Table 2.2-1
Process Stream Sampling and Analysis Scheme
For 3 Tests with 3 Runs Per Test (Cont.)

Sample Type/Location[1]	Sampling Method	Trial Burn Tests	Frequency of Sampling for Each Run[6]	Analysis[2]	Analytical Method
5. Low-Btu Liquid Feed	Tap (S004)	1, 2 & 3	Two 100-ml grab samples and one 40-ml VOA vial every 15 minutes composited into three samples at end of run	Composition[3] Density Viscosity Heating Value Metals POHCs	ASTM method D3176 ASTM D-4052 ASTM D-88-81 ASTM D2015-85 SW-846 method 7000 SW-846 method 8010
6. Sludge Feed	Tap (S004)	1, 2 & 3	Two 100-ml grab samples every 15 minutes composited into two samples at end of run	Composition[3] Density Viscosity Heating Value Metals POHCs	ASTM method D3176 ASTM D-4052 ASTM D-88-81 ASTM D2015-85 SW-846 method 7000 SW-846 method 8010
7. Process Water	Tap (S004)	1, 2 & 3	Two 100-ml grab samples and one 40-ml VOA vial every 60 minutes, composited into three samples at end of run	Total chloride Metals POHCs	A003 SW-846 method 7000 SW-846 method 8010
8. Rotary Kiln Ash	Scoop (S007)	1, 2 & 3	Two 100-g grab samples every hour composited into two samples at end of run	Metals POHCs	SW-846 method 7000 SW-846 method 8010
9. Ash Quench Blowdown	Tap (S004)	1, 2 & 3	Two 100-ml grab samples and one 40-ml VOA vial every 60 minutes composited into three samples at end of run	Total Chloride Metals POHCs	A003 SW-846 method 7000 SW-846 method 8010

1. See Drawing 8813-F-017.
2. Not including additional quality control analyses.
3. Composition includes C, H, O, N, S, Cl, F, ash and moisture.
4. Metals sampling and analysis will only be done for Test 2.
5. A003, S004 and S007 methods are from "Sampling Methods for Hazardous Waste Incinerators," first edition.
6. Only one grab sample will be needed for Test 1 and 3. Test 2 will require a second grab sample for metals.

Table 2.2-1
Process Stream Sampling and Analysis Scheme
For 3 Tests with 3 Runs Per Test (Cont.)

Sample Type/Location[1]	Sampling Method	Trial Burn Tests	Frequency of Sampling for Each Run[6]	Analysis[2]	Analytical Method
10. Lime Slurry Feed	Tap (S004)	1, 2 & 3	Two 100-ml grab samples and one 40-ml VOA vial every 60 minutes composited into three samples at end of run	Total Chloride Metals POHCs	A003 SW-846 method 7000 SW-846 method 8010
11. Dried Solids	Scoop (S007)	1, 2 & 3	Two 100-g grab samples every hour composited into two samples at end of run	Metals POHCs	SW-846 method 7000 SW-846 method 8010
12. Stack Gas	See Table 2.2-2	1, 2 & 3	3-hr composite	See Table 2.2-2	See Table 2.2-2
13. Inorganic Filtrate	Tap (S004)	1, 2 & 3	Two 100-ml grab samples and one 40-ml VOA vial every 60 minutes, composited into three samples at end of run	Total chloride Metals POHCs	A003 SW-846 method 7000 SW-846 method 8010
14. POHC Mixture	Tap (S004)	1, 2 & 3	One VOA vial per batch	POHC	SW-846 method 8010
15. Metals Solution	Tap (S004)	2	One 250-ml grab sample per batch	Metals	SW-846 method 7000

1. See Drawing 8813-F-017.
2. Not including additional quality control analyses.
3. Composition includes C, H, O, N, S, Cl, F, ash and moisture.
4. Metals sampling and analysis will only be done for Test 2.
5. A003, S004 and S007 methods are from "Sampling Methods for Hazardous Waste Incinerators," first edition.
6. Only one grab sample will be needed for Test 1 and 3. Test 2 will require a second grab sample for metals.

Table 2.2-2
Stack Sampling and Analysis Parameters For 3 Tests With 3 Runs Per Test[1]

Test Parameters	Sample Methods	No. of Samples Collected	Analyzed	Analytical Method
O_2 and CO_2	EPA M3	9	9	Orsat
CO	EPA Performance Specification	Continuous	Continuous	Continuous NDIR Emissions Monitor
Particulate/HCl	EPA M5-P	9	9	Gravimetric/Ion Chromatography
Metals[2]	M5-M	3	3	SW-846-6010, 7060, 7421, 7470
Volatile POHCs	VOST (SW-846-0030)	12	9	SW-846-5040, 8240
Semivolatile POHC	M5-SV (SW-846-0010)	9	9	SW-846-8270
PCDD/PCDF[2]	M5-SV (SW-846-0010)	3	3	SW-846-8290
PCBs[2]	M5-SV (SW-846-0010)	3	3	SW-846-8080

---

[1] Blank samples are not included in this table.

[2] Metals, PCDD/PCDF and PCB analysis will only be done during Test 2.

Table 2.2-3
Summary of Process Monitoring During Trial Burn

Parameter	Location of Monitor	Type of Monitor	Operating Range	Permanent Recorder
Bulk Solids Weight	21-crane/clamshell	Load Cells	0-3,000 lb	Yes
Containerized Waste Weight	16-automatic weigh sealant feed conveyor	Load Cells	0-1,000 lb	Yes
Fuel Oil Flow Rate	17A-line to burner on kiln 17B-line to burner on SCC	Mass Flowmeter	0-10 gpm 0-10 gpm	Yes
High-Btu Liquid Waste Feedrate	18A-feed line to burner on kiln 18B-feed line to burner on SCC	Mass Flowmeter	0-10 gpm	Yes
Low-Btu Liquid Waste Feedrate	19A-feed line to nozzle on kiln 19B-feed line to nozzle on SCC	Mass Flowmeter	0-15 gpm	Yes
Sludge Feedrate	20-feed line to nozzle on kiln	Mass Flowmeter	0-15 gpm	Yes
Combustion Air	22A-air inlet duct to kiln 22B-air inlet duct to SCC	Thermal Dispersion Flowmeter	0-50,000 acfm 0-25,000 acfm	No
Rotary Kiln Pressure (Draft)	23 kiln outlet	Pressure Transducer	-2 to 1" wc	Yes
Rotary Kiln Speed	24-kiln rollers	Tachometer	0-1.5 rpm	No
Rotary Kiln Temperature	25-kiln outlet	Type-R Thermocouple	0-3,000°F	Yes
SCC Temperature	26-SCC outlet	Type-R Thermocouple	0-3,000°F	Yes
SCC Pressure (Draft)	27-SCC outlet	Pressure Transducer	-2 to 1" wc	No

Table 2.2-3
Summary of Process Monitoring During Trial Burn (Cont.)

Parameter	Location of Monitor	Type of Monitor	Operating Range	Permanent Recorder
SDA Temperature	29-SDA outlet	Type-J Thermocouple	0-600°F	Yes
Absorber Slurry Feedrate	30-recycle pump discharge	Magnetic Flowmeter	0-100 gpm	No
Fabric Filter Pressure Differential	31-fabric filter	Pressure Transducer	0-10" wc	Yes
Oxygen	32-stack	Paramagnetic	0-25 Percent	Yes
Carbon Monoxide	32-stack	NDIR	0-500 ppm	Yes
Hydrogen Chloride	32-stack	Specific Ion or NDIR	0-250 ppm	Yes
Total Hydrocarbon	32-stack	FID	0-100 ppm	No
Combustion Gas Flow Rate	32-stack	Thermal Dispersion Flowmeter	0-90,000 acfm	Yes

2.2.2 - Pumpable Waste Samples

Samples of each of the wastes will be obtained from sample taps located in the line connecting each waste holding tank to the burners or nozzles. The sampling taps for waste will be located upstream of the POHC injection locations. Section 3.2.2 provides more detail on sampling procedures.

2.3 SAMPLING AND ANALYSIS PROTOCOL

During each of the test runs (see Subsections 1.7.2 through 1.7.4), samples will be collected of each waste feed, auxiliary fuel, stack gases, kiln ash, dried solids, process water, lime slurry and makeup water fed to the SDA. Table 2.2-1 lists these samples together with their sampling locations, frequencies, sample sizes, and sampling and analytical methods.

Grab samples will be collected from 15 process streams throughout the trial burn test program. Table 2.2-1 summarizes the process samples to be collected during the entire program of three trial burn tests with three runs per test. The locations of sampling and monitoring points are shown in Appendix D-5, Drawing 8813-00-F-017. The frequency and types of flue gas samples to be collected during the trial burn test program are detailed in Table 2.2-2.

Laboratory analyses for organic and inorganic constituents will be conducted on both the waste feeds and flue gas samples from each of nine runs (three test burns and three runs per test). Selected physical properties of the waste feeds will also be determined employing standard ASTM methodologies. In addition, where feasible, aliquots of the flue gas samples or extracts will be maintained in reserve for subsequent analysis if required. All analytical work will be conducted in accordance with EPA and ASTM procedures. A summary of applicable analytical procedures is provided in Table 2.2-1.

2.4 PROCESS MONITORING PROTOCOL

A summary of the monitored major process variables needed to demonstrate compliance with 40 CFR 264.343 and 264.345 for the trial burn test runs is found in Table 2.2-3. The variables include

- Auxiliary fuel flow
- Waste flow rates or charge weights
- Kiln and SCC temperatures and pressures
- Other process variables
  - Combustion air flow rates
  - Kiln speed
  - Lime slurry flow rate
  - Stack gas O_2, CO, HCl and THC concentrations

The locations of the monitors are also summarized in Table 2.2-3, and the locations of monitoring points are referenced and shown in Drawing 8813-00-F-017, a process schematic. The type of monitor, its operating range and whether there is a permanent recorder is also indicated in the table. The permanent recorders (strip-chart devices) are located in the control room. Items which are noted as not having a permanent recorder will be logged by the computer data acquisition system (DAS).

Prior to the execution of the trial burn, all monitoring instruments will be calibrated as discussed in Section 6. During the course of each trial burn test run, all recording measurements made on strip charts will show a time line for the start of the run and a time line for the completion of the run. If data logs are kept in parallel with the strip-chart data, both sets of data will be available and used for review and reporting the test results. If the strip-chart recorder or the DAS malfunctions for a process variable, then during the trial burn, measurements will be recorded onto a log sheet every 15 minutes (including the start and finish of the run) which will show the time and the value of the measurement.

2.5 EXPECTED STACK GAS CONCENTRATIONS AND DETECTION LIMITS

For each test, the outlet concentrations of each POHC and metal (Test 2 only) have been estimated. This was accomplished by determining the following:

- The mass flow of the feed stream into the incinerator
- The mass flow of the POHC or metal into the incinerator
- The mass flow of the POHC or metal out of the incinerator, calculated for a conservative, estimated DRE of 99.999% for POHCs and assumed APCE removal efficiency of 99% for chromium, barium, beryllium and silver, 90% for mercury and 98% for other metals
- An estimate of the effluent concentration of POHC or metal, using the measured flow of gas out of the stack and the H&MBs

Since more than one stream can contain a similar POHC or metal, a summation of all effluent concentrations of identical POHCs and metals were made to estimate the total effluent concentration. These results are presented in Tables 2.5-1, 2.5-2 and 2.5-3 for Tests 1, 2 and 3 respectively.

Since a GC/MS system will be used to analyze for POHCs, an acceptable range for analysis is 10-2,000 ng of each POHC collected in 10 to 20 L of gas from the VOST. This yields an acceptable range of concentrations for each POHC of 1 to 200 micrograms/dry-std-m^3 for 10 L or gas, or 0.5 to 100 micrograms/dry-std-m^3 for 20 L of gas. The expected stack gas detection limits for metals, volatile organic compounds (VOCs), and semivolatile organic compounds (semivolatile POHCs, PCDDs and PCDFs) are shown in Table 2.5-4.

Table 2.5-1
Projected Maximum POHC Effluent Concentration: Test 1

POHC	C_2Cl_4	CCl_4	C_6H_5Cl	$C_6H_3Cl_3$
POHC MW	165.83	153.8	112.56	181.45
POHC Mass Fraction	0.008	0.008	0.008	0.008
Kiln POHC Flow, lb/hr	211	211	211	211
SCC POHC Flow, lb/hr	73	73	73	73
Total POHC Flow, lb/hr	283	283	283	283
Total POHC Flow, g/min	2,141	2,141	2,141	2,141
Assumed POHC DRE	0.99999	0.99999	0.99999	0.99999
Total POHC Out, μg/min	21,414	21,414	21,414	21,414
Exit Gas Flow, acfm	59,100	59,100	59,100	59,100
Exit Gas Flow, dry-std-m^3-min	586	586	586	586
Exit Gas Maximum POHC Conc., μg/dry-std-m^3	36.52	36.52	36.52	36.52
std cond: 68°F., 760 mm Hg, 24.05 l/gmol				

Table 2.5-2
Projected Maximum POHC and Metals Effluent Concentration: Test 2

POHC	C_2Cl_4	CCl_4	C_6H_5Cl	$C_6H_3Cl_3$
POHC MW	165.83	153.8	112.56	181.45
POHC Mass Fraction	0.019	0.019	0.019	0.019
Kiln POHC Flow, lb/hr	246	246	246	246
SCC POHC Flow, lb/hr	48	48	48	48
Total POHC Flow, lb/hr	294	294	294	294
Total POHC Flow, g/min	2,224	2,224	2,224	2,224
Assumed POHC DRE	0.99999	0.99999	0.99999	0.99999
Total POHC Out, µg/min	22,245	22,245	22,245	22,245
Exit Gas Flow, acfm	61,500	61,500	61,500	61,500
Exit Gas Flow, dry-std-m^3-min	643	643	643	643
Exit Gas Maximum POHC Conc., µg/dry-std-m^3	34.59	34.59	34.59	34.59
std cond: 68°F., 760 mm Hg, 24.4 l/gmol				

Table 2.5-3
Project Maximum POHC Effluent Concentration: Test 3

POHC	C_2Cl_4	CCl_4	C_6H_5Cl	$C_6H_3Cl_3$
POHC MW	165.83	153.80	112.56	181.45
POHC Mass Fraction	0.003	0.003	0.003	0.003
Kiln POHC Flow, lb/hr	28	28	28	28
SCC POHC Flow, lb/hr	8	8	8	8
Total POHC Flow, lb/hr	35	35	35	35
Total POHC Flow, g/min	264	264	264	264
Assumed POHC DRE	0.99999	0.99999	0.99999	0.99999
Total POHC Out, μg/min	2,645	2,645	2,645	2,645
Exit Gas Flow, acfm	70,850	70,850	70,850	70,850
Exit Gas Flow, dry-std-m^3-min	823	823	823	823
Exit Gas Maximum POHC Conc., μg/dry-std-m^3	3.21	3.21	3.21	3.21
std cond: 68°F., 760 mm Hg, 24.05 l/gmol				

Table 2.5-4
Expected Stack Gas Detection Limits for Metals and Organic Compounds

Analyte[b]	Stack Gas Concentration Lower Limit of Detection[a], $\mu g/m^3$ (dry standard gas conditions)
Sb	8
Ag, Tl	2
Ba, Be	0.5
Cr, Pb	0.3
Cd, Hg	0.03
As	0.3
Volatile POHCs	0.25 - 0.5
Semivolatile POHCs	1
PCDDs and PCDFs[c]	0.0002-0.001[d]

[a] It is assumed that gas sample volumes are 1.7 m^3 for metals and semivolatile POHCs, 20 L for VOCs and 2.5 m^3 for PCDDs and PCDFs.

[b] Detection limits are based on ICAP analysis for all metals except As, Be, Cd, Cr and Pb (GFAA) and Hg (CVAA).

[c] Detection limits are per VOST trap or combined trap pair.

[d] The lower end of detection range applies to tetra-CDD or CDF congeners (including 2, 3, 7, 8-TCDD or -TCDF); the upper end of the detection range applies to octa-CDD or -CDF congeners.

Table 2.5-5
Projected Maximum Metals Effluent Concentration: Test 2

Metals	Sb	As	Ba	Be	Cd
Metal MW	121.75	74.92	137.33	9.01	112.41
Metal Mass Fraction (SCC Feed)	0.0273	0.00078	0.01088	0.00002	0.001811
SCC Metal Feed, lb/hr	125	4.59	49.9	0.0905	8.29
SDA Metal Feed, lb/hr	0.125	0.10	0.025	0.0005	0.00125
TOTAL METAL FEED, lb/hr	125	4.69	49.9	0.091	8.29
Assumed Metal Removal Eff.	0.98	0.98	0.99	0.99	0.98
Total Metal Out, g/min	18.96	0.708	3.78	0.0069	1.25
Exit Gas Flow, acfm	61,500	61,500	61,500	61,500	61,500
Exit Gas Flow, dry-std-m^3-min	643	643	643	643	643
Exit Gas Maximum Metal Conc., mg/dry-std-m^3	29.4	1.101	5.86	0.011	1.943

Table 2.5-5
Projected Maximum Metals Effluent Concentration: Test 2 (Cont.)

Metals	Cr	Pb	Hg	Ag	Tl
Metal MW	52.00	207.20	200.59	107.87	204.37
Metal Mass Fraction (SCC Feed)	0.00109	0.00987	0.00064	0.01080	0.00941
SCC Metal Feed, lb/hr	4.960	45.000	2.92	49.70	41.4
SDA Metal Feed, lb/hr	0.0050	0.125	0.000625	0.0025	0.00250
TOTAL METAL FEED, lb/hr	4.97	45.1	2.92	49.70	41.4
Assumed Metal Removal Eff.	0.99	0.98	0.90	0.99	0.98
Total Metal Out, g/min	0.38	6.85	2.22	3.75	6.30
Exit Gas Flow, acfm	61,500	61,500	61,500	61,500	61,500
Exit Gas Flow, dry-std-m^3-min	643	643	643	643	643
Exit Gas Maximum Metal Conc., mg/dry-std-m^3	0.584	10.6	3.45	5.83	9.79

3.0 SAMPLING PROCEDURES

3.1 INTRODUCTION

The sampling procedures that will be used for the trial burn tests are described in this section. Reference methods are reproduced in Attachment D-6-2.

3.2 WASTE FEED AND PROCESS SAMPLING

3.2.1 Sample Container Preparation

Sample containers for waste feed samples will be prepared in the laboratory prior to the test for each of the samples to be collected. The sample containers will be organic and metals free, as required, and sealed upon receipt in the field.

All sample bottles used for liquid waste samples will be amber glass with Teflon cap liners except the volatile organic analysis (VOA) vials, which will be clear glass. No glue will be used to attach the liners to the sample bottle caps. All sample bottles will be new bottles.

The sample bottles for collection of organics will be cleaned prior to shipment to the field as follows:

1. Rinse with tap water.
2. Soak in hot "Alconox" soapy water.
3. Rinse in hot water.
4. Rinse in distilled water.
5. Rinse in methanol.
6. Bake in 110°C oven for at least one hour.
7. Let cool, cap and place in storage container.

The sample bottles for collection of metals in Test 2 will be cleaned prior to shipment to the field as follows:

1. Rinse with deionized water.
2. Soak Teflon lid liners and bottles in 50% HNO_3 for at least eight hours.
3. Rinse with deionized water.
4. Air dry.
5. Cap and place in storage container labelled "acid rinsed."

3.2.2 Liquid Sample Collection Procedure

Grab samples will be collected from individual process streams throughout the trial burn. Table 2.2-1 summarizes the process streams to be sampled during the entire program of three tests with three runs per test, as well as sampling frequency and analytical parameters.

Samples from the liquid streams (high-Btu and low-Btu waste, process water, inorganic filtrate, ash quench blowdown and lime slurry feed) will be collected at regular intervals during the test burn. The first sample is an integrated grab sample for higher heating value, ash, viscosity, chlorine, specific gravity and semivolatile POHC analysis. The second sample consists of individual VOA vials for volatile POHC analysis. The third is an integrated grab sample for metals analysis (Test 2 only).

The liquid samples will be collected from a valved tap. The sample tap will be flushed (allowed to flow briefly) before each sample is collected. This will ensure that any stagnant accumulation of solids or other contaminants that may be present in the tap does not affect the sample integrity. For the integrated grab samples, a minimum volume of 100 ml will be collected for each grab subsample.

A VOA vial will also be filled every 15 minutes. The vial will be filled completely and no air bubbles allowed to remain in the bottle. Each VOA vial will contain 40 ml of sample.

The typical procedure to be used for liquid process stream sampling is as follows:

1. Assemble the following equipment: one 1-gallon wide-mouth compositing jar and two 1-L sample jars with Teflon-lined polycarbonate tips; one 250-ml graduated beaker; one funnel; one 1-gallon pail and two 1-gallon jugs for waste.

2. Before the trial burn run starts, clear sampling line by opening tap and collecting not less than 1 L of waste. Examine waste to ensure that it is homogenous (e.g., free from water, solids, etc.). If not, contact Field Crew Chief before trial burn starts.

3. At the beginning of the trial burn run and every 15 minutes (± 5 min), open tap, rinse about 1/2 L into pail and close tap. Visually inspect waste to ensure that it is homogenous. If not, contact Field Crew Chief.

4. Open tap slowly, fill beaker to 100-ml mark. Place sample in compositing jar. Seal jar.

5. Record the time and any comments on sampling form. Dump pail contents into waste jug.

6. Repeat steps 1-4 every 15 minutes for three-hour run. This will result in 12 grab samples and 1.2 L of sample at end of run (24 grab samples and 2.4 L of sample for Test 2).

7. Mix final sample by inverting sealed jar at least 20 times.

8. Pour sample into each 1-L sample jar.

9. Following traceability procedures in QAPP, label jar, seal jar and fill out necessary custody forms.

10. Deliver sample to Field Crew Chief for packaging and shipment.

3.2.3 Waste Feed Samples

General

During each of the three individual tests, separate waste feed samples will be collected from each of the streams.

Bulk Solids

Bulk solids will be soil without POHCs. 100-g grab samples will be taken every hour by the scoop method and composited into one (Test 1 and 3) or two (Test 2) samples at the end of each run.

Containerized Waste

The containerized waste will include POHC on soil, or a commercially available sorbent such as diatomaceous earth, in a one-gallon plastic pail. The solid sorbent will be loaded with a known amount of POHC per unit mass of sorbent (by pouring a known and documented amount of POHC into the one-gallon pail of absorbent). Two 200-g representative sorbent grab samples will be collected by the scoop method before feed preparation.

Sludge

Samples will be collected from a valved tap located downstream of the sludge feed pump. The POHC will be metered and mixed with the sludge downstream of the sample tap and upstream of the sludge nozzle. One (Test 1 and 3) or two (Test 2) 100-ml grab samples and one 40-ml VOA vial of the sludge waste feed will be collected at 15-minute intervals and composited into two (Test 1 and 3) or three (Test 2) samples at the end of each run.

A calibrated flowmeter will be used to continuously monitor each of the POHC feedrates. These instruments will be calibrated prior to the trial burn. In addition, the weight of the POHC feed holding tanks will be recorded every 30 minutes.

High-Btu and Low-Btu Liquid

Samples of each of these liquid wastes will be obtained from a valved tap located in the line connecting each liquid waste holding tank to the burners or nozzles. POHCs will be injected into the waste streams upstream of the burner/nozzle and downstream of the sample tap. In Test 2, metals will be metered into the low-Btu feed piping to the SCC nozzle.

One (Test 1 and 3) or two (Test 2) 100-ml grab samples and one 40-ml VOA vial will be collected at 15-minute intervals and composited into two (Test 1 and 3) or three (Test 2) samples at the end of each run.

A calibrated flowmeter will be used to continuously monitor each of the POHC feedrates. These instruments will be calibrated prior to the trial burn. In addition, the weight of the POHC feed holding tanks will be recorded every 30 minutes.

3.2.4 Other Samples

Kiln Ash

Rotary kiln ash will be sampled directly from the ash discharge dumpster. These samples will be collected upon the completion of each test, starting with an empty ash dumpster at the beginning of each run. A metal laboratory scoop will be used for the collection of the ash samples.

One (Test 1 and 3) or two (Test 2) 100-g grab samples will be collected every hour by combining samples taken at two to five locations from within the discharge hopper. Each set of samples will be composited for analyses at the end of each run.

All samples will be collected in glass sample bottles prepared as described earlier and will be marked with preprinted labels at the time of collection. In the laboratory, the ash will be placed in a parallel bar tumbler for mixing, prior to removing any aliquots for analysis.

Dried Solids

Dried solids will be sampled from the dried solids dumpster in the same manner as the kiln ash. These samples will be collected upon the completion of each test burn, starting with an empty dried solids dumpster at the beginning of each run.

Ash Quench Blowdown

One (Test 1 and 3) or two (Test 2) 100-g grab samples and 40-ml VOA vial will be collected at 60-minute intervals per the procedures in Section 3.2.2.

Lime Slurry

One (Test 1 and 3) or two (Test 2) 100-ml grab samples and one 40-ml VOA vial of lime slurry will be collected at 60-minute intervals using the procedures in Section 3.2.2.

Process Water

One (Test 1 and 3) or two (Test 2) 100-ml grab samples and one 40-ml VOA vial of process water will be collected at 60-minute intervals per the procedures in Section 3.2.2.

Inorganic Filtrate

One (Test 1 and 3) or two (Test 2) 100-ml grab samples and one 40-ml VOA vial of inorganic filtrate will be collected at 60-minute intervals per the procedures in Section 3.2.2.

Fuel Oil

One (Test 1 and 3) or two (Test 2) 100-ml grab samples and one 40-ml VOA vial of fuel oil will be collected at 60-minute intervals per the procedures in Section 3.2.2.

Metals Solution Sampling

For Test 2 only, one 100-ml grab sample from each mix tank batch will be collected via valved tap to be analyzed for metals.

POHC Mixture Sampling

One 40-ml VOA vial will be collected via valved tap from each POHC mix tank batch to be analyzed for POHCs.

All samples will be collected in glass sample bottles prepared as described earlier. All samples will be marked with preprinted labels at the time of collection.

3.3 FLUE GAS SAMPLING AND MONITORING

3.3.1 General

A minimum of 12 sampling points, as indicated in Figure 2.2.1, are required by U.S. EPA Reference Method 1 for the collection of representative samples of particulates and HCl from a source. The absence of cyclonic flow at the sample location will be verified in accordance with EPA Reference Method 1 prior to the start of the sampling activities. Each point will be sampled for a period of 15 minutes during each sampling episode, providing for a total run time of three hours (12 locations x 15 minutes per location).

3.3.2 Particulates and HCl (M5-P)

Apparatus Description

A U.S. EPA M5 sampling train will be used to sample simultaneously for particulates and HCl. Sampling will be isokinetic (± 10%) with readings of the flue gas parameters recorded at each sampling point. A schematic of the M5-P train is given in Figure 3.3.2-1.

The train components consist of a heat-traced borosilicate glass probe housed in a stainless-steel sheath, an optional cyclone, a high-efficiency quartz fiber filter supported on a teflon-coated screen, five glass impingers, and a flow control module containing a leakless vacuum pump, a dry gas meter, an orifice meter and appropriate valves, gauges, and associated hardware to permit control and monitoring of the gas sampling rate.

The impingers will be charged as follows:

- Impinger one: 100 ml of distilled, deionized water (DDI)
- Impinger two: 100 ml of DDI
- Impinger three: 100 ml 0.1N NaOH
- Impinger four: empty
- Impinger five: approximately 200 g of blue indicating-type silica gel

Because of the low particulate emissions expected for this trial burn, a cyclone will not be used. The filter holder assembly is housed in a temperature-controlled oven maintained at 120 ± 14°C. Because of the potential for contamination from the use of silicone sealant grease, all glass-to-glass connections prior to and including the second impinger will be made without the use of sealant grease.

Calibration

The M5-P equipment will be calibrated, checked for proper operation and cleaned for use prior to arrival on site.

As a minimum, the following equipment will be calibrated:

- Dry gas meter/orifice
- Stack temperature thermocouple
- Filter oven thermocouple
- Dial thermometers for gas meter

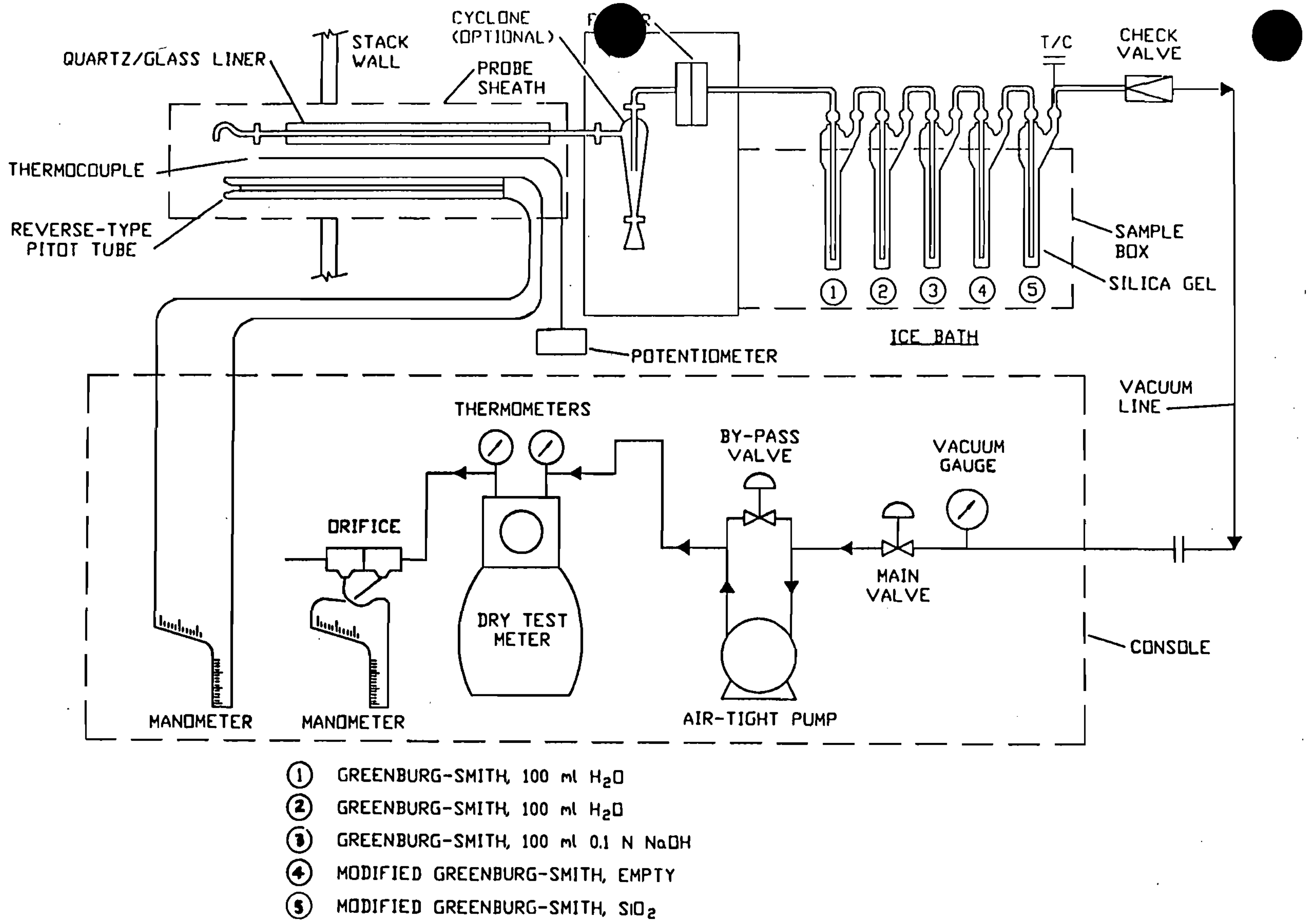

Figure 3.3.2-1

Schematic of M5 Particulate/HCl Sampling Train (M5-P)

- Probe nozzles
- Pitot tube (by geometric standards)

Copies of all calibration data will be placed in the project calibration data file and will be submitted with the final report.

Cleaning/Preparation

All surfaces in the M5-P sampling trains that will come into contact with the sample gas stream will be thoroughly cleaned. The cleaning procedure is discussed in more detail later in this section. To minimize the potential for contamination of sampling train glassware, all glassware components will be sealed with acetone-rinsed aluminum foil prior to being packed for storage and transport. All remaining sampling train components will be cleaned and prepared in accordance with routine M5-P procedures.

In order to ensure a leak-free fit, all M5-P sampling train joint fittings will be greaseless fittings modified with threaded Teflon fittings.

All glassware, rinse bottles and associated apparatus used for in-field sample and recovery will be thoroughly cleaned and conditioned. This includes a final rinse with acetone. Rinse bottles used will be made of Teflon (or equivalent). No non-Teflon plastic components will be used. All sample containers will be glass with Teflon-lined lids.

Quartz fiber filters will be used. Identification numbers will not be stamped on these filters. The filters are placed in glass petri dishes which are marked with an identification number.

All sample bottles required for recovery of the M5-P samples will be amber glass bottles or clear glass bottles wrapped in aluminum foil with Teflon-lined lids. Bottles are required for probe and filter front-half rinse, back-half and condenser rinse, and condensate impinger contents.

Pre-sampling procedures for the sample train are as follows:

1. Wash sample train and all sample containers in a sequence of soap and water, 15% nitric acid, DDI water and methanol.

2. Air dry and cover all openings with parafilm.

3. Perform required leak checks after assembly.

A leak check of the entire sampling train will be conducted prior to and at the conclusion of each sampling run, as well as before and after changing or disconnecting any components of the train during the run. Leak checks before and after changing any constituent will be conducted at 15"

Hg vacuum to ensure a leak rate of not more than 0.02 ft^3/min. Leak checks conducted at the end of a run and prior to making any component changes or disconnections to facilitate recovery will be at or above the highest vacuum obtained during the run. The pitot tube assembly will also be checked for leaks prior to and after each sampling run to ensure validity of the velocity data.

Sample Recovery

Recovery procedures for this system are as follows:

1. Remove sample train to predetermined recovery area.
2. Note condition of train (impinger color, filter condition, etc.).
3. Disassemble filter housing and transfer filter to its original glass petri dish. Seal container.
4. Rinse front half of train three times with acetone. Seal amber glass container and label sample.
5. Measure volume of condensate in first two impingers in a precleaned glass graduated cylinder. Record volumes and transfer to a linear polyethylene (LPE) container. Rinse impinger with known amount of DDI before sealing.
6. Weigh impingers 3 and 4 and combine contents into LPE container. Rinse with known amount of DDI water before sealing.
7. Record weight gained by silica gel impinger. Transfer silica to LPE container. Rinse impinger with known amount of DDI.
8. Verify that all containers are properly sealed and labeled, and liquid level marked. Log all samples on Sample Packing Sheet.

Sampling will be done per standard EPA M5 procedures. The sampling period will be three hours, collecting a minimum of 90 ft^3 of sample gas.

3.3.3 Volatile POHC Emissions (VOST)

Overview

The VOST method will be used for determination of volatile concentrations in the flue gas. The VOST method uses Tenax, an organic sorbent, to collect the volatile organic species of interest.

The detailed sampling procedures will follow EPA test protocol (SW-846 Method 0030). A brief description is given here.

As required in the VOST protocol, the probe shall be located in the stack at a point of average stack velocity. Sample temperatures will be monitored at the outlet of the sample probe and the inlet to the Tenax cartridge through the use of thermocouples. The gas temperature through the probe will be maintained above 140°C to prevent premature condensation of volatile components. The temperature of the gas when it passes through the resin cartridges will be maintained at less than 20°C. The sample gas volume through the resin traps will be maintained at 1/2 liter per minute for 40 minutes. This VOST sample procedure will ensure that the collection tubes are not oversaturated and will not overload the analytical instrument, which would invalidate the results. The total sample volume for each set of tubes will not exceed 20 liters. Four analyzable VOST samples will be collected during each of the three-hour runs, although only three will be analyzed.

The samples collected for each VOST run will consist of a Tenax cartridge, a backup cartridge containing Tenax and charcoal, and potentially some flue gas condensate. (We do not expect that any condensate will be collected, since in the APC system design, the moisture content in the flue gas has been greatly reduced.) The sealed sorbent cartridges will be stored in containers packed with activated charcoal. The contents of the condensate impinger, if any, will be transferred to 20-ml VOA vials and brought up to volume with DDI water.

Method and field blanks of the sorbent resins will be collected in conjunction with each of the three tests. During the sampling program, the reagent and sorbent resin samples associated with this train will be maintained off site to minimize the potential for sample contamination from the ambient air. All resin cartridges and collected samples associated with this train will be stored and transported at a temperature of 4°C to prevent contamination and to minimize degradation of the Tenax resin.

Apparatus Description

The train will consist of a heated, glass-lined probe with a glass wool plug to remove particulate, followed by an assembly of condensers and organic resin traps as illustrated in Figure 3.3.3-1. The first condenser will cool the gas stream and will condense the water vapor present. The flue gas and condensed moisture will then pass through a cartridge containing 1.5 g of Tenax resin (60/80 mesh). The condensate will be collected in the first impinger and will be continually purged by the gas stream itself. The second condenser and trap containing Tenax/charcoal (50/50) will serve as a backup for low-volume breakthrough compounds. A drying tube for residual moisture removal will follow the second Tenax trap.

The metering system for VOST consists of vacuum gauges, a leak-free pump, a rotameter for monitoring the gas flow rate, a dry gas meter (low volume) with 2% accuracy at the required sampling rate, and related valves and equipment. All sample transfer lines used with the VOST up to and

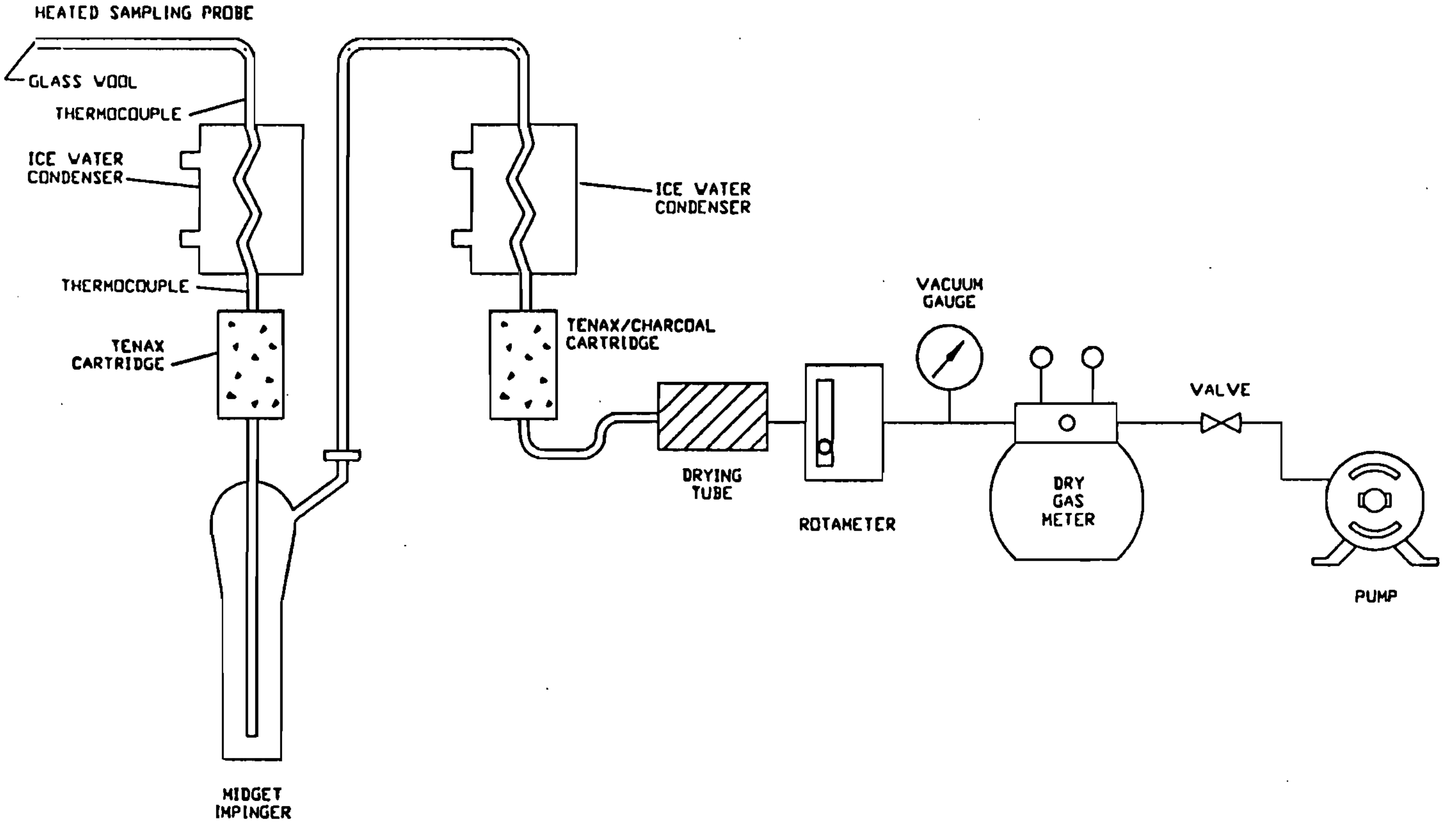

Figure 3.3.3-1
Schematic of Volatile Organic Sampling Train (VOST)

including the second resin cartridge are Teflon or glass with connecting fittings that are capable of forming leak-free vacuum-tight connections without the use of sealing grease.

Cleaning/Preparation

General. Extensive sorbent preparation and quality assurance procedures will be instituted to ensure the integrity of these samples. All components of the system that will come into contact with the samples will be rinsed with methanol and dried in an oven at 150°C for two hours.

All VOST equipment will be calibrated, checked for proper operation and cleaned for use prior to arrival on site.

Glassware Cleaning. All glass parts of the VOST train will be cleaned in the laboratory as follows:

1. Wash with Alconox soap and hot water.
2. Rinse in tap water.
3. Rinse in distilled water.
4. Rinse with methanol.
5. Dry in 150°C oven for two hours.
6. Cap with aluminum foil or Teflon caps until used.

Tenax Preparation. The sorbent tube cartridges will be packed with Tenax and conditioned by flowing organic-free nitrogen (30 ml/min) through the resin while heating to 190°C for at least three hours.

During the thermal conditioning, the Tenax cartridges will be installed in a specially designed manifold. Selected traps from each batch of conditioned traps will be analyzed to ensure that no contaminants are present on the traps.

Charcoal Preparation. Procedures for reconditioning charcoal (SKC petroleum base or equivalent) are the same as those described for Tenax above.

Sample Cartridge Preparation. "Primary" VOST cartridges will be packed with 1.5 of prepared Tenax, and "secondary" cartridges will be packed with approximately 1 g each of prepared Tenax and prepared petroleum-based charcoal (SKC Lot 104 or equivalent), 2:1 by volume. The packed cartridges will be conditioned as described above.

After the tubes are conditioned, they will be capped and placed into a jar which is sealed for shipment. The jar will contain a small amount of charcoal for shipment. During every run, each tube will be marked directly with an identifier.

An EPA audit cylinder will be sampled (using the same VOST sampling apparatus used for volatile organics sampling) for the three volatile POHCs (CCl_4, C_6H_5Cl and C_2Cl_4) as an additional check of sample integrity, if such are provided. It will be the responsibility of the agency to provide the audit gases for use by the field test crew.

Sample Recovery

The VOST traps removed from the sample train will be immediately capped. Each trap tube will be permanently marked with a unique identification number; this identification number will be recorded on the data form and sample traceability form to ensure proper sample identification. This trap number will be used as the primary sample identification number.

The sealed trap will be replaced in the trap storage/transport jar which will be kept in a cooler with ice during the duration of the test and during on-site storage.

3.3.4 Semivolatile POHC Emissions (M5-SV)

Apparatus Description

The semivolatile POHCs present in the stack gas will be collected using an M5-SV sampling train as shown in Figures 3.3.4-1 and 3.3.4-2. The M5-SV procedure consists of isokinetically sampling a predetermined volume of stack gas with the M5-SV apparatus. In general, the M5-SV sampling procedures parallel the procedures specified in EPA Methods 1 through 5 for particulate emissions testing.

The M5-SV sampling train is based upon the apparatus design normally employed for sampling conducted under U.S. EPA M5, but is modified to include a special coiled condenser/sorbent module assembly for collection of semivolatile organic compounds (see Figure 3.3.4-2). The train components consist of a heat-traced borosilicate glass probe housed in a stainless-steel sheath, an optional cyclone, a high-efficiency quartz fiber filter supported on a teflon-coated screen, a water-cooled glass coil condenser and glass tube filled with about 70 g of XAD-2 resin-type sorbent (Figure 3.3.4-1), four glass impingers, and a flow control module containing a leakless vacuum pump, a dry gas meter, an orifice meter and appropriate valves, gauges, and associated hardware to permit control and monitoring of the gas sampling rate.

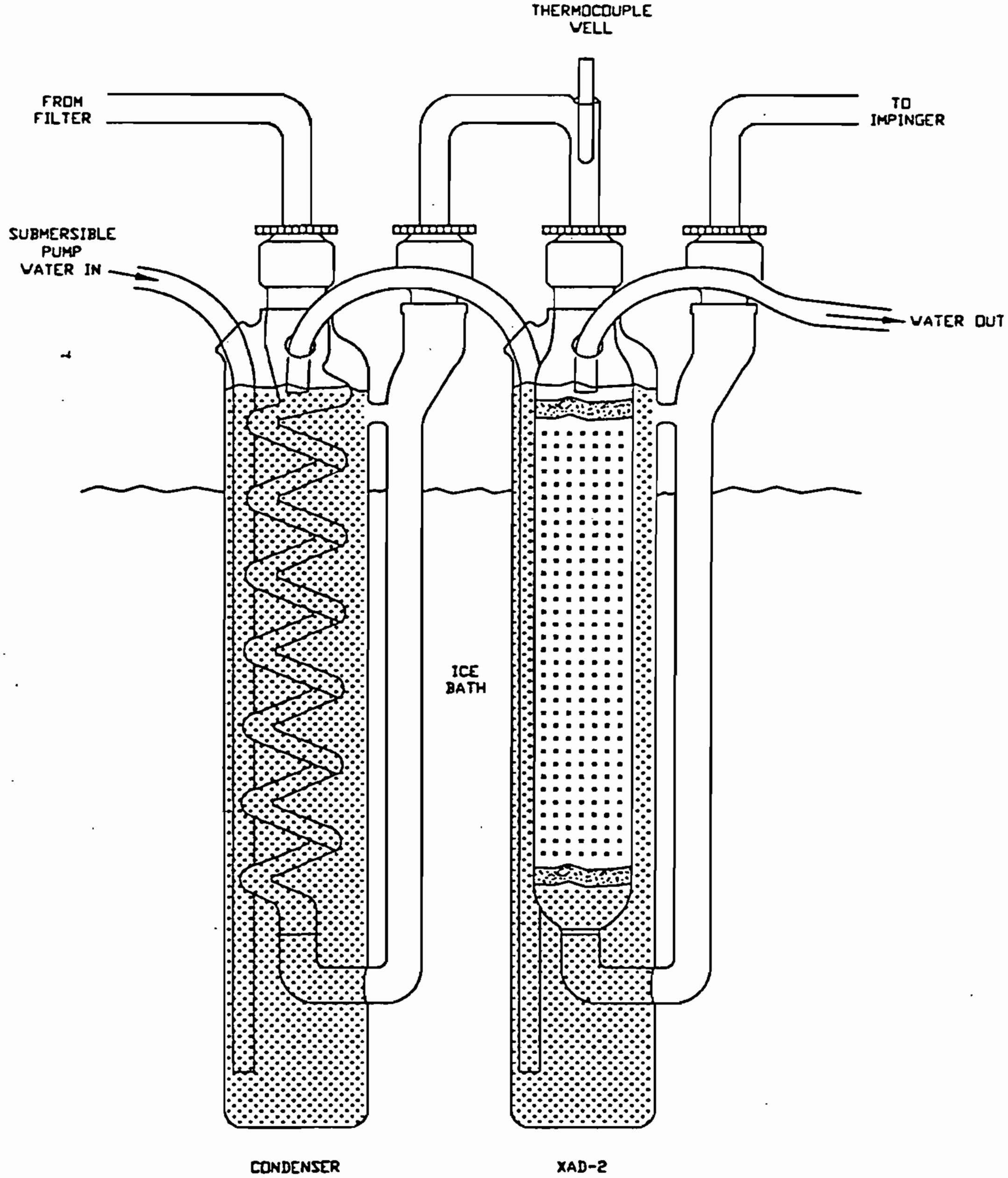

Figure 3.3.4-1
M5-SV Condenser and XAD Resin Cartridge

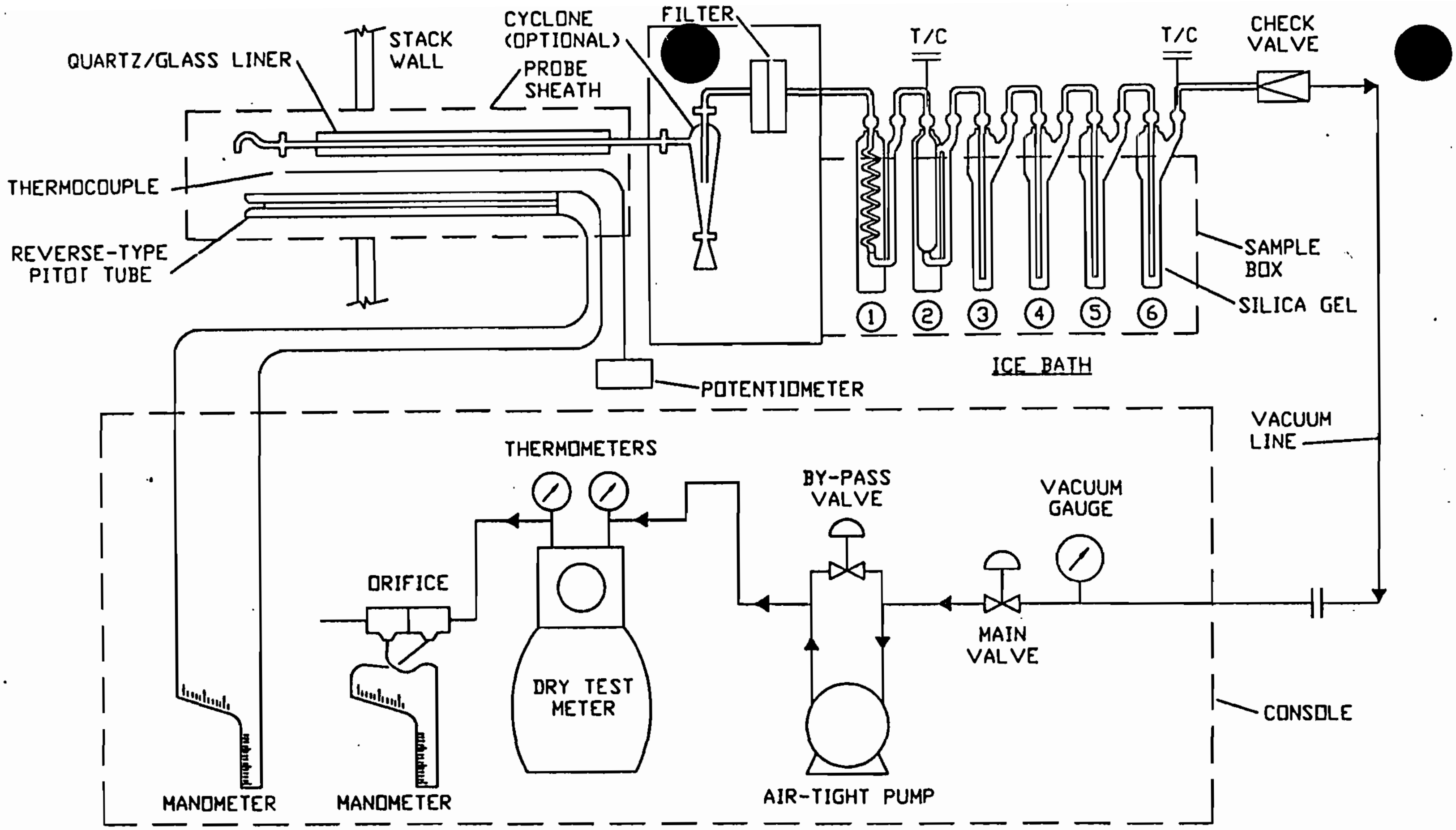

① CONDENSER WITH ICE WATER JACKET

② XAD RESIN CARTRIDGE WITH ICE WATER JACKET

③ 2 L MODIFIED GREENBURG-SMITH, 100 ml OF DOUBLE DISTILLED IN GLASS H_2O

④ GREENBURG-SMITH, 100 ml OF DOUBLE DISTILLED IN GLASS H_2O

⑤ GREENBURG-SMITH, EMPTY

⑥ MODIFIED GREENBURG-SMITH, SiO_2

Figure 3.3.4-2

Schematic of M5-SV Sampling Train

The impingers will be charged as follows:

- Impinger one: 100 ml of DDI
- Impinger two: 100 ml of DDI
- Impinger three: empty
- Impinger four: approximate 200 g of blue indicating-type silica gel

Because of the low particulate emissions expected for this trial burn, a cyclone will not be used. The filter holder assembly is housed in a temperature-controlled oven maintained at 120 ± 14°C.

Because of the potential for contamination from the use of silicone sealant grease, all glass-to-glass connections prior to and including the second impinger will be made without the use of sealant grease.

Calibration

The M5-SV equipment will be calibrated, checked for proper operation and cleaned for use prior to arrival on site.

As a minimum, the following equipment will be calibrated:

- Dry gas meter/orifice
- Stack temperature thermocouple
- Filter oven thermocouple
- Dial thermometers for gas meter
- Probe nozzles
- Pitot tube (by geometric standards)

Copies of all calibration data will be placed in the project calibration data file and will be submitted with the final report.

Cleaning/Preparation

All surfaces in the M5-SV sampling trains that will come into contact with the sample gas stream will be thoroughly cleaned. The cleaning procedure is discussed in more detail later in this section. To minimize the potential for contamination of sampling train glassware, all glassware components will be sealed with acetone or hexane-rinsed aluminum foil prior to being packed for storage and transport. All remaining sampling train components will be cleaned and prepared in accordance with routine M5 procedures.

The M5-SV organic modules are one-piece assemblies, charged with approximately 70 g of sorbent.

All glassware, rinse bottles and associated apparatus used for in-field sample and recovery will be thoroughly cleaned and conditioned. This includes a final rinse with acetone or hexane. Rinse bottles used will be made of Teflon (or equivalent). No non-Teflon plastic components will be used. All sample containers will be glass with Teflon-lined lids.

Quartz fiber filters will be used. Identification numbers will not be stamped on these filters. The filters will be placed in glass petri dishes which are marked with an identification number.

The resin to be used in the M5-SV train will be rinsed and extracted to remove any contaminants which may interfere with the analysis for the POHCs of interest. The resin traps will be packed within two weeks of transport to the field. Once packed, the traps will be sealed with aluminum foil and stored.

All sample bottles required for recovery of the M5-SV samples will be amber glass bottles or clear glass bottles wrapped in aluminum foil with Teflon-lined lids. Bottles are required for probe and filter front-half rinse, back-half and condenser rinse, and condensate impinger contents.

Sampling will be done per standard EPA M5 procedure. The sampling period will be three hours, collecting a minimum of 70 ft^3 of sample gas.

Sample Recovery

Recovery procedures for this system are as follows:

1. Remove sample train to predetermined recovery area.
2. Note condition of train (impinger color, filter condition, etc.).
3. Disassemble filter housing and transfer filter to its original glass petri dish. Seal container.
4. Rinse front half of train three times with acetone. Seal amber glass container and label sample.
5. After weighing XAD-2 impinger, seal resin module with glass stoppers.

6. Measure volume of condensate impinger in a precleaned glass graduated cylinder. Record volume and transfer to an LPE container. Rinse impinger with known amount of DDI before sealing.

7. Weigh impinger two and pour contents into LPE container. Rinse with known amount of DDI water before sealing.

8. Record weight gained by silica gel impinger. Transfer silica to LPE container. Rinse impinger with known amount of DDI.

9. Verify that all containers are properly sealed and labeled, and liquid level marked. Log all samples on Sample Packing Sheet.

3.3.5 Metals Emissions (M5-M)

Samples of stack gas for determination of metals concentration will be collected according to "Methodology for the Determination of Trace Metal Emission in Exhaust Gases from Stationary Source Combustion Processes," by the U.S. EPA Environmental Monitoring Systems Laboratory and "Proposed Methods for Measurement of CO, O_2, THC, HCl and Metals at Hazardous Waste Incinerators," Volume VI of the Hazardous Waste Incineration Guidance Series. This method is basically an EPA M5 sampling train with some very specific modifications:

- The nozzle and probe liner will be glass or quartz. All connections will be glass or Teflon.
- The filter will be quartz or glass, with a fritted glass support.
- The first impinger will be empty.
- The second and third impingers will contain a nitric acid/hydrogen peroxide solution.
- The fourth impinger will contain acidic potassium permanganate.
- A brush containing no metal will be used for the probe and nozzle rinse. The probe and nozzle will be rinsed with 0.1.N nitric acid.

A minimum of 60 dscf of stack gas will be collected over a minimum sampling period of 120 minutes. Figure 3.3.5-1 illustrates the sampling apparatus.

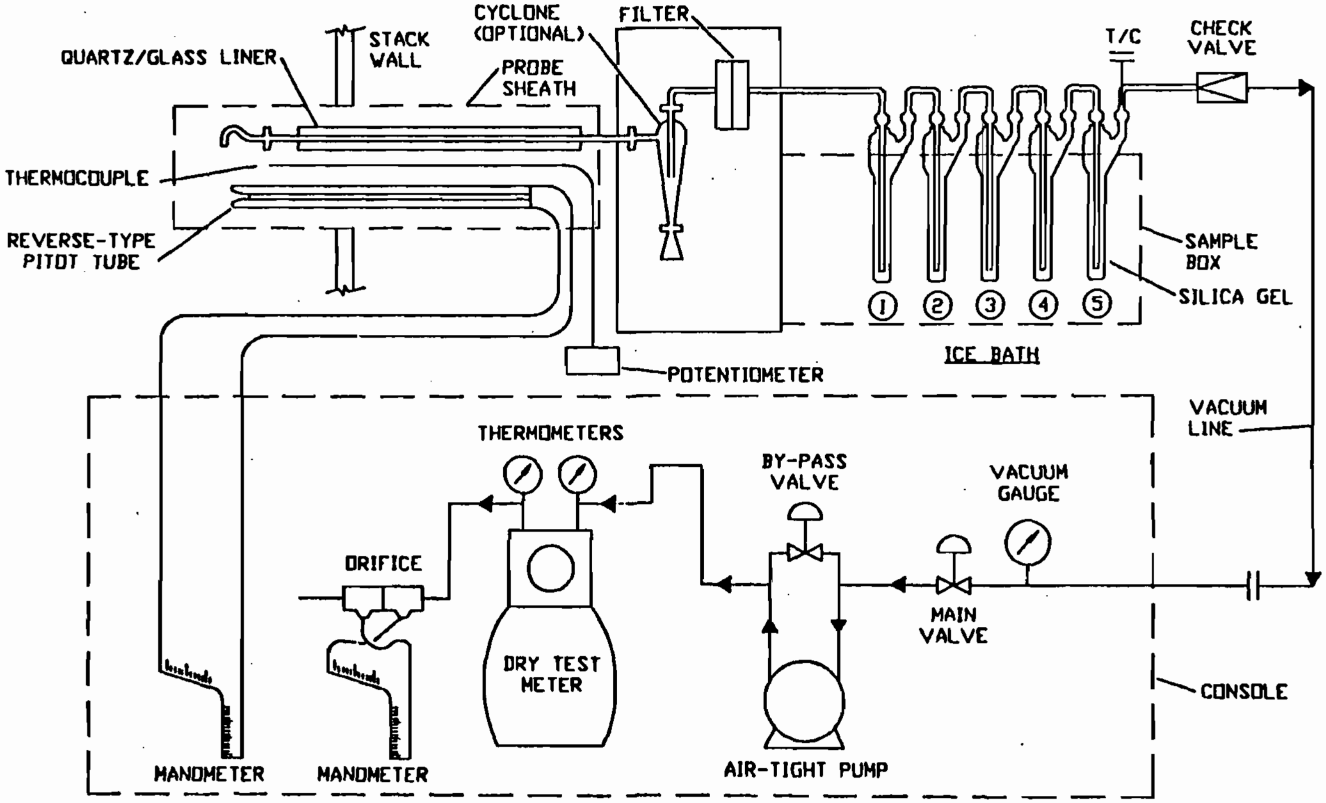

① GREENBURG-SMITH, 100 ml H_2O

② GREENBURG-SMITH, 100 ml H_2O

③ GREENBURG-SMITH, 100 ml 0.1 N NaOH

④ MODIFIED GREENBURG-SMITH, EMPTY

⑤ MODIFIED GREENBURG-SMITH, SiO_2

Figure 3.3.5-1
Schematic of M5-M Train

3.3.6 Fixed Gases - CO_2 and O_2 (Method 3)

Samples for the determination of CO_2 and O_2 composition of the stream will be collected using the technique detailed in U.S. EPA Reference Method 3. The analysis of the collected samples will be conducted using an Orsat gas analyzer in accordance with the method. The integrated sample will be taken over the entire three-hour sampling period, simultaneously with and at the same location as the M5 sampling. A stainless steel probe or equivalent method will be used.

Leak-checks of the bags and the sampling system will be conducted prior to sampling, as required in Method 3. All bags will be leak-checked in the laboratory prior to being shipped to the field. The sampling train will be leak-checked before each run as required in Method 3.

The bag sample collected will be taken to the laboratory and will be analyzed within four hours using an Orsat analyzer.

3.3.7 Continuous Monitoring

A continuous monitoring system will be used to measure CO concentrations throughout each test run in accordance with U.S. EPA Method 10. The monitoring system will be equipped with a gas conditioning system and continuous chart recorders. The flue gas will be extracted from the stack location and drawn through a conditioning system to remove moisture (condensation) and particulates (filtration). The CO concentration will be determined using an NDIR. The monitor will be calibrated with zero gas (nitrogen) and two certified span gases prior to and at the conclusion of each test run. The data will be corrected for instrument drift (if any) and reduced to 15-minute averages. The maximum and minimum values will be reported for each test period.

Continuous monitoring of the flue gas will be performed during the entire testing. On each day of flue gas testing, the following sequence will be implemented:

1. Arrive on site. Inspect equipment condition.

2. Set up and leak-check system.

3. Connect analyzer to strip-chart recorder.

4. Perform initial calibration of monitor with zero gas (nitrogen) and three concentrations of certified calibration gas (approximately 20%, 50% and 90% of full scale). Note and make any adjustments on the monitor.

   NOTE: All calibration gases will be introduced upstream of the sample conditioning system. See Figure 3.3.7-1.

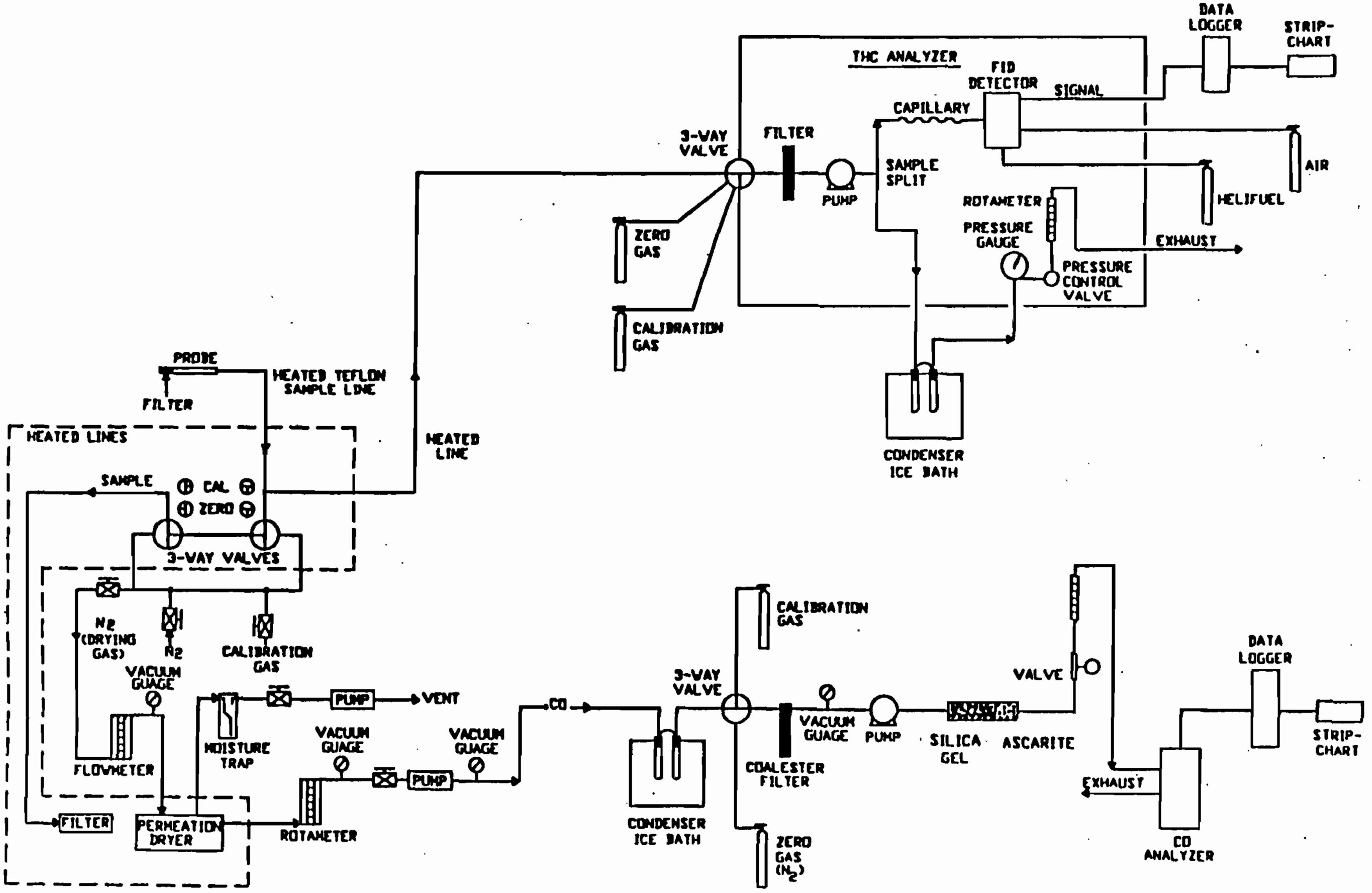

Figure 3.3.7-1
Simplified Schematic of CEM System

5. Monitor CO throughout flue gas test period, marking strip chart and noting beginning and end of test runs.

6. At end of run, recalibrate monitor and note all values on appropriate data sheet to determine monitor drift.

7. Reduce and present strip-chart recordings as 15-minute averages.

4.0 SAMPLE PREPARATION AND ANALYSIS PROCEDURES

4.1 GENERAL

Laboratory analyses for organic and inorganic constituents will be conducted on both the waste feeds and flue gas samples from each of nine runs (three test burns and three runs per test). Selected physical properties of the waste feed will also be determined employing standard ASTM methodologies. In addition, where feasible, aliquots of the flue gas samples or extracts will be maintained in reserve for subsequent analysis if required. All analytical work will be conducted in accordance with EPA and ASTM procedures.

4.2 WASTE FEED AND PROCESS STREAMS

4.2.1 POHC Analysis

Waste feed samples (liquid, solid and sludge) from each of nine runs will be analyzed for each of the four POHCs present in the feed: carbon tetrachloride, chlorobenzene, tetrachloroethylene and trichlorobenzene. GC methods will be evaluated before the test for possible interferences. The method(s) which give the best resolution of the compounds of interest will be used for final analysis. Instrument calibration will generally be provided using each of three dilutions of a stock calibration mixture.

4.2.2 Physical Properties

The physical properties to be determined on each of the waste feed streams are listed in Table 2.2-1. As indicated, the selected parameters will be analyzed by standard procedures.

4.2.3 Chlorine

The total chlorine content of the waste feed will be determined by Parr oxygen bomb combustion (Method A-004) followed by chloride analysis (ASTM D512-81). Sample preparation procedures will proceed in accordance with ASTM D808.

The Parr oxygen bomb method involves the oxidation of the feed sample by combustion in a bomb containing oxygen under pressure. The chlorine compounds thus liberated are absorbed in a sodium carbonate solution. Carbonate solutions and bomb rinsings are reduced to approximately 75 ml and brought to 100 ml final volume prior to quantitation.

More details on analysis of process streams will be supplied when a sampling and analysis contractor is selected for the trial burns.

4.3 FLUE GAS

See Table 2.2-2 for a summary of flue gas analytical methods.

4.3.1 Particulate Analysis

The M5-P train samples will be submitted to the laboratory for particulate and HCl analysis. Each M5-P train will comprise two discrete types of samples: particulate filter and probe rinses, and impingers/condensates.

Prior to any actual HCl analysis, the particulate samples will be submitted for gravimetric analyses. This will entail evaporating the solvent-based probe rinse to dryness, at which time the residue will be weighed and combined with the particulate filter for analysis.

4.3.2 HCl Analysis

The impinger solutions resulting from the M5-P particulate/HCl sampling train will be analyzed for total chloride by means of EPA Method 300.00. Samples will be directly injected into the sample loop with no prior treatment other than dilution where necessary. Sample chromatograms will be compared to standard multi-anion calibration chromatograms for the quantitation of chloride as HCl.

4.3.3 Volatile POHC Analysis

The samples for VOCs will be obtained from the VOST train. All analytical procedures and the associated QA/QC requirements will follow EPA protocol per SW-846-5040. A brief description is given here.

The Tenax and Tenax/charcoal samples generated from each run will be analyzed by thermal desorption GC/MS procedures. Flow from the desorption unit will be directed through the purge chamber of a purge-and-trap sample concentrator onto a GC/MS.

All calibrants will be introduced using a gas-tight syringe containing varying amounts of mixed-stock standard spikes onto blank Tenax tubes. A minimum of three calibration standards will be analyzed prior to sample analysis. Linear regression plots of total nanograms per tube versus response will be made to calculate sample concentrations.

Standard operating procedures require that the GC/MS be tuned daily to criteria established for bromofluorobenzene as specified in EPA Method 624.

Each VOST tube will be analyzed separately for breakthrough. The criterion for acceptability is that the second tube can contain no more than 30% of the amount in the first tube.

4.3.4 Semivolatile POHC Analysis

The samples for semivolatile POHCs will be obtained from the M5-SV sampling train. All analytical procedures and the associated QA/QC requirements will follow EPA protocol per SW-846-8270. Upon receipt in the laboratory, the M5-SV samples will be removed from the insulated containers and will be placed in cold storage (<4°C). The M5-SV samples will consist of the following:

- Filter
- Sorbent trap
- Front-half organic rinse
- Back-half organic rinse
- Condensate (first and second impinger contents and rinse)

The filter and XAD-2 resin will be extracted with methylene chloride using Soxhlet extractors. The front-half and back-half organic rinses are added to the filter and XAD-2 resin fractions, respectively, either before or after extraction, depending upon whether particulate matter is present. The condensate is also extracted with methylene chloride.

The combined extracts are cleaned up using adsorbent chromatography, as required, concentrated and submitted for GC/MS analysis.

Analysis for the M5-SV semivolatile POHC will be by GC/MS using a 15- to 30-m fused silica capillary column.

4.3.5 Metals Analysis

The samples from the Test 2 M5-M sampling train will be analyzed for metals according to SW-846-6010, 7060, 7421 and 7470 per the latest EPA guidance.

4.3.6 Stack Gas Analysis for PCDDs and PCDFs

One half of the extract for the Test 2 M5-SV samples will be subjected to column cleanup and analyzed for tetra- through octa-polychlorinated dibenzodioxins (PCDDs), tetra- through octa-polychlorinated dibenzofurans (PCDFs), 2, 3, 7, 8 - TCDD and 2, 3, 7, 8 - TCDF according to SW-846 method 8290.

4.3.7 Stack Gas Analysis for PCBs

The samples from the Test 2 M5-SV sampling train will be analyzed for PCBs according to SW-846 method 8080.

4.3.8 Stack Gas Analysis for O_2 and CO_2

The integrated gas samples will be analyzed for O_2 **and** CO_2 by an Orsat analyzer in accordance with EPA Reference Method 3.

5.0 DATA REDUCTION AND REPORTING OF RESULTS

Within 90 days after the completion of the trial burn, a Trial Burn Report will be submitted to the Florida Department of Environmental Regulation. This report will include all of the data collected during the trial burn, the determinations required by Florida statutes, and a certification that the trial burn has been conducted in accordance with this trial burn plan.

5.1 INCINERATOR OPERATING CONDITIONS

A summary of the actual operating conditions monitored during each trial burn test run (see Tables 1.7.1-1 through 1.7.1-4) will be included in the report. This summary will list the average, minimum and maximum values of the monitored operating conditions during each test run. It will include the average, minimum and maximum values for kiln combustion gas outlet temperatures, SCC combustion gas outlet temperatures and combustion gas flow rates.

5.2 POHC DRE

The feedrate of each POHC to the incinerator during each test run will be determined from the waste mass feedrates and the amounts or concentrations of the POHCs in each waste feed. The emission rate of each POHC from the incinerator during each test will be determined from the volumetric flowrate of stack gas and the concentrations of the POHCs in the stack gas. These results will be used to calculate the DRE for each POHC for each test run using the formula specified in 40 CFR 264.343 and shown in Attachment D-6-1.

5.3 POHC MASS BALANCE

A true mass balance of POHCs during each test run will not be possible. Greater than 99.99% of the POHCs are destroyed in the incinerator, and the stack emissions of POHCs will be measured in units of grams per second. As the waste feedrates and ash generation rates will be measured in tons per hour, differences between these values cannot be accurately measured. However, as complete a picture as possible of the fate of all POHCs in each test will be determined. To accomplish this, the feedrates of all POHCs to the incinerator during each test run will be determined, and the output rates of all POHCs from the incinerator (via the stack gas emissions and discharges of the kiln ash and dried solids) during each test run will be determined.

5.4 VOLATILE ORGANIC COMPOUND EMISSIONS

Stack gas emissions of all volatile POHCs will be determined for each test run in terms of stack gas concentrations and emissions rates.

5.5 SEMIVOLATILE ORGANIC COMPOUND EMISSIONS

Stack gas emissions of the semivolatile POHC will be determined for each test run in terms of stack gas concentrations and emission rates.

5.6 PARTICULATE AND METAL EMISSIONS METALS REMOVAL EFFICIENCIES

The incinerator stack particulate emissions for each test run will be determined. These will be reported in concentrations of grains/dry standard cubic foot, corrected to 7% stack gas O_2 concentration using the formula prescribed in 40 CFR 264.343 and to 50% excess air using the formula prescribed in F.A.C. 17-2.700(6)(a)2.

The stack gas emissions of the following metals will be determined during each of the runs of Test 2 in terms of stack gas concentrations and emission rates: antimony, arsenic, barium, beryllium, cadmium, chromium, lead, mercury, silver and thallium. In addition, the total feedrate of each of these metals during each of the Test 2 runs will be determined and the total control efficiency of the incinerator system for each metal will be calculated. Finally, the concentrations and quantities of each of these metals in the kiln ash and dried solids from each of the Test 2 runs will be determined.

5.7 HYDROCHLORIC ACID EMISSIONS

The stack gas HCl emissions, as determined by M5-P sampling, for each test run will be determined in units of ppm and lb/hr. In addition, the HCl removal efficiency of the APCE will be determined for each test run. This will be determined from the total mass of organic chlorine (corrected to equivalent HCl) fed to the incinerator in the waste feeds and the total mass of HCl emitted in the stack gas.

5.8 PCDD AND PCDF EMISSIONS

Stack gas emissions of each of the following PCDDs and PCDFs will be determined for Test 2 in terms of stack gas concentrations and emission rates:

2, 3, 7, 8-TCDD	2, 3, 7, 8-TCDF
Total tetra PCDDs	Total tetra PCDFs
Total penta PCDDs	Total penta PCDFs
Total hexa PCDDs	Total hexa PCDFs
Total hepta PCDDs	Total hepta PCDDs
Total octa PCDDs	Total octa PCDFs

5.9 CO, CO_2, THC AND O_2 EMISSIONS

The average, minimum, and maximum concentrations of CO (one-hour rolling average, corrected to 7% O_2) and THC in the stack gas, as measured by the continuous CO and THC analyzers, will be reported for each test run. The average concentrations of O_2 and CO_2 in the stack gas, as measured by Orsat analysis, will be reported for each run. Also, the average, minimum and maximum concentrations of O_2 in the stack gas, as measured by the continuous O_2 analyzer, will be reported for each run.

5.10 WASTE FEED AND FUEL CHARACTERISTICS

The concentrations of volatile and semivolatile organic compounds and the heating value, ash content and organic chlorine content of each waste feed and fuel oil feed for each test run, as delineated in Table 2.2-1, will be determined. In addition, the metal concentrations in each waste and fuel feed for each of the Test 2 runs will be determined.

5.11 ASH AND DRIED SOLIDS CHARACTERISTICS

The metal concentrations in the kiln ash and dried solids for each of the Test 2 runs will be determined. In addition, the semivolatile organic compound concentrations in the kiln ash for each of the test runs will be determined.

5.12 FUGITIVE EMISSIONS

The internal pressures maintained in the kiln and SCC during each of the test runs will be recorded and reported to demonstrate the control of fugitive emissions.

6.0 QUALITY ASSURANCE/QUALITY CONTROL (QA/QC)

6.1 GENERAL

An effective QA/QC strategy is essential to ensure the usefulness and reliability of data collected in any source testing effort. As part of the FFP-LP trial burn, a comprehensive QA/QC program is documented in the Quality Assurance Project Plan (QAPP) in Attachment D-6-6.

The primary objective of the QA/QC effort will be to provide the mechanism whereby the quality of the measurement data is known and documented and is subject to ongoing evaluation throughout the course of the project. To achieve this objective, the QA/QC program must serve two distinct, interrelated functions. One function will be that of providing a QC database which, together with performance audit results, can be used to assess measurement data quality in terms of precision, accuracy and completeness. Inherent and implied in this assessment function is a second, parallel function of controlling data quality within prescribed limits of acceptability.

The QAPP delineates specific sampling and analytical procedures, calibration requirements, internal QC checks, data reduction and validation procedures, and sample custody requirements for each sampling/analytical activity. It also addresses general QA/QC considerations such as

- Data recording
- Documentation procedures
- Project organization and responsibilities
- Preventative maintenance operations
- Reporting requirements
- Corrective action mechanisms

In addition to these general considerations, the QAPP devotes considerable attention to the internal QC checks which will be used to ensure that the measurement data meet data quality requirements. These QC checks will include procedures such as

- Daily calibration of analytical instruments
- Calibration of sampling equipment and apparatus
- Analytical checks using QC standards to assess bias and precision

The following sections present a brief overview of the QA/QC activities which will be an integral part of the trial burn program. Table 6.1 lists some sample-specific QA/QC activities that will be performed.

Table 6.1
Summary of Sample-Specific QA/QC Activities

Stream	Parameter	QA/QC Activity	Frequency
Waste Feeds[a]	POHCs	Field Duplicate	Once per trial burn
		MS/MSD[b]	Once per trial burn
	Composition	Field Duplicate	Once per trial burn
		MS/MSD[c]	Once per trial burn
	Metals	Field Duplicate	Once per trial burn
		MS/MSD	Once per trial burn
Spiking Solutions	POHCs	Field Duplicate	Once per trial burn
		MS/MSD	Once per trial burn
	Metals	Field Duplicate	Once per trial burn
		MS/MSD	Once per trial burn
Kiln Ash	POHCs	Field Duplicate	Once per trial burn
		MS/MSD	Once per trial burn
Process Water	POHCs	Field Duplicate	Once per trial burn
		MS/MSD	Once per trial burn
Inorganic Filtrate	POHCs	Field Duplicate	Once per trial burn
		MS/MSD	Once per trial burn
Dried Solids	POHCs	Field Duplicate	Once per trial burn
		MS/MSD	Once per trial burn

Table 6.1
Summary of Sample-Specific QA/QC Activities (Cont.)

Stream	Parameter	QA/QC Activity	Frequency
Stack Gas	POHCs	Field Blank	Once per test run
		Trip Blank	Six per trial burn
		Audit Samples	Three per trial burn
	Particulates	Field Blank (Train)[d]	Once per trial burn
		Field Blank (Filter and Solutions)	If necessary
	HCl	Field Blank (Train)[d]	Once per trial burn
		Field Blank (Solutions)	If necessary
		MS/MSD Imp. Catch	Once per trial burn
	Metals	Field Blank (Train)	Once during Test 2
		Field Blank (Filter and Solutions)	If necessary
		MS/MSD After Digestion	Once during Test 2
		MS (Filter and Solutions)	Once during Test 2
	PCDD/PCDFs	Field Blank (Train)	Once during Test 2
		Field Blank (Filter, XAD and Solutions)	If necessary
		MS/MSD Blank XAD	Once during Test 2

[a] Activity will be performed on each waste stream type.

[b] MS/MSD = Matrix spike/matrix spike duplicate.

[c] MS/MSD for chlorine only.

[d] A single train blank will be used for particulates and HCl.

6.2 SAMPLING QA/QC

The QAPP prescribes QC procedures to be implemented during all sampling activities and will specify guidelines for

- Equipment calibration
- Sampling protocol
- Sample handling techniques

The checkout and calibration of sampling equipment is an important function in maintaining data quality. Referenced calibration procedures will be prescribed, and the results will be properly documented and retained. Calibrations will be performed prior to field deployment.

Sampling techniques used during the trial burn will be EPA reference methods or "state-of-the-art" methods, some with modifications for greater applicability. Sample collection will be done in accordance with the methods prescribed in the QAPP. The following QA procedure checks will be followed during the sampling efforts:

- Use of standard data forms and source sampling data sheet checklists
- Performance of visual inspections of sampling systems
- Performance of system leak checks before and after sampling
- Performance of isokinetic sampling rate checks
- Performance of daily data review and calculation checks

After the samples have been properly obtained in the field, their subsequent handling during transfer to the analytical laboratories becomes an important factor in the successful performance of a trial burn program. All collected samples will be labeled with adequate descriptions of the samples to prevent confusion among multiple samples. Samples will be inventoried against logbook records before shipment.

6.3 ANALYTICAL QA/QC

A regime of analytical QA/QC is specified in the QAPP. The procedures will use various checks to determine the validity of analyses. These include

- Calibration standards
- Certified standards
- In-lab standards
- Blanks
- Spikes
- Replicates

Quality assurance begins with the sample log and carries through the reporting of data. The unique identifying number assigned in the field and recorded in the sample log facilitates tracking and identification and prevents mixups during the analysis process. Sample custody reports will be used to monitor sample movement through analytical laboratories.

Chemical characterization of emission and process samples will be performed using standard wet-chemistry, GC, and GC/MS techniques.

The accuracy and precision of analyses will be documented through the QA/QC programs specified in the QAPP. Accuracy will be evaluated by analyzing standards, and blank and spiked samples. Precision will be monitored by replication of analysis on 5% to 20% of samples to establish background concentrations and potential interferences.

7.0 PRE-TRIAL-BURN OPERATION

This section responds to the requirements of Section 270.62(a), and sets forth the proposed conditions and period of operation of the incineration system before the trial burn (see Table 7.0).

7.1 STARTUP/SHAKEDOWN PERIOD

The incinerator system is very sophisticated. There are two combustion units, a total of six feed mechanisms and the associated APCE. In order to fully test all components of the system, at least the full 720 hours of operating time for the processing of hazardous waste allowed by Section 270.62(a) will be necessary.

During this time, the five major forms of hazardous waste feed will be tested at a variety of feedrates and heating values. These wastes are as follows:

- High-Btu liquid
- Low-Btu liquid
- Sludge
- Containerized waste
- Bulk solids

In order to shake down the acid gas scrubbing system and the particulate matter control system, it will be necessary to incinerate wastes containing organically bound chlorine and wastes that produce particulates. The exact wastes that will be incinerated during this period cannot be identified due to changes within industry as well as changes in federal and state regulations, nor can the exact amount of time that each waste feed mechanism will be in operation; therefore, the trial burn is not presently expected to be initiated within 720 hours of operation on hazardous waste. If more than 720 hours of operation on hazardous waste is necessary, an extension will be requested.

7.1.1 Startup/Shakedown Conditions

During this shakedown phase, the operating parameters needed to indicate compliance with DRE requirements will be

- Operating temperatures
- Excess air rate, as measured by continuous O_2 monitoring
- Content of the combustion gases
- Combustion gas velocity, as measured by a stack flowmeter

Table 7.0
Pre-trial-burn Period Operating Conditions

ITEM	REFERENCE	REGULATORY COMPLIANCE DEMONSTRATION/ACTION
1. Allowable period for incinerating hazardous waste	270.62(a)	Anticipated 720 hours in compliance
2. Performance standards	270.62(a)(1) 264.343*	
a. DRE		Minimum rotary kiln temperature of 1400°F Minimum SCC temperature of 1800°F Minimum O_2 of 3% Maximum stack gas flow of 81,000 acfm at 390°F, resulting in >2-second residence time in SCC
b. HCl		Maximum HCl concentration in stack gas of 100 ppm on one-hour rolling average
c. Particulate matter		Opacity not to exceed 20%
3. Restriction on constituents	270.62(a)(1)	F020-F028 wastes will not be incinerated. Waste metals feedrates will be limited to Tier I rates.
4. Restrictions on waste feedrate	270.62(a) 264.345(b)(2)*	Kiln heat release not to exceed 75 MM Btu/hr. SCC heat release not to exceed 40 MM Btu/hr. Total heat release not to exceed 75 MM Btu/hr.

* Incorporated by reference in 270.62(a)(1)

Table 7.0
Pre-trial-burn Period Operating Conditions (Cont.)

ITEM	REFERENCE	REGULATORY COMPLIANCE DEMONSTRATION/ACTION
5. CO level in combustion gas	270.62(a)(1)	Not to exceed 100 ppm on one-hour rolling average.
6. Combustion temperature	270.62(a)(1)	Rotary kiln: 1400°F minimum SCC: 1800°F minimum
7. Indication of combustion gas velocity	270.62(a)(1) 264.345(b)(4)	Combustion gas flow less than 81,000 acfm at 390°F (with one-minute time delay).
8. Startup and shutdown periods	270.62(a)(1) 264.345(c)*	No hazardous waste will be fed to the incinerator during periods of startup or shutdown.
9. Fugitive emissions	270.62(a)(1) 264.345(d)*	System will be under negative pressure, with a draft setpoint of 0.5" wc or higher.
10. Automatic waste feed cutoffs	270.62(a)(1) 264.345(e)*	Automatic waste feed cutoffs will be fully operational prior to startup. One cutoff will be tested each week on a rotating basis.
11. Design limits	270.62(a)(1) 264.345(b)(6)*	Design heat release (75 MM Btu/hr) will not be exceeded.

* Incorporated by reference in 270.62(a)(1)

The SCC will be operated at a minimum temperature of 1800°F, and the rotary kiln will be operated at a minimum of 1400°F. To ensure adequate excess air at these temperatures, the O_2 content will be maintained above 3% on a dry-volume basis as measured by the O_2 monitor at the stack. To ensure adequate residence time, the combustion gas velocity will be limited to that corresponding to 81,000 acfm at 390°F at the fabric filter outlet. This will result in a minimum gas residence time of two seconds for the SCC alone, in addition to the several seconds of gas residence time in the kiln and transition chamber. Furthermore, the CO content of combustion gases will be maintained below 100 ppm, based on a one-hour rolling average.

In developing the proposed operational requirements, several factors have been considered. The rotary kiln can supply hot, partially combusted gases to the SCC. Operating the rotary kiln at 1400°F should destroy most Appendix VIII organic compounds, and this temperature is also sufficient to burn out the solids. Additionally, this temperature is within typical operating ranges of most rotary kilns. The 1800°F temperature at which the SCC will be operating will destroy any remaining Appendix VIII compounds. This temperature is also in the range of typical operating conditions for hazardous waste incinerators. On this basis, the indicated operating temperatures will be more than adequate for the interim shakedown period.

Continuous measurement of combustion gas velocity will provide a good indication of residence time in the combustion zone. The proposed excess O_2 content will ensure adequate combustion of residual organics with O_2.

Thus, the proposed combination of residence time, excess air and combustion temperature will be more than sufficient to ensure that maximum waste destruction efficiency will be achieved during the interim shakedown period. Many industrial and commercial rotary kilns have operated with similar conditions during trial burns and achieved the required DRE.

Continuous HCl monitoring will indicate compliance with the HCl removal efficiency and emission standards during the interim shakedown period. An HCl emission of no greater than 100 ppm on a rolling hourly average will indicate compliance with the standards.

Opacity monitoring will indicate compliance with the particulate matter standard during the interim shakedown period. An opacity of 20% or less should indicate compliance with the particulate matter standard of 0.02 gr/dscf corrected to 7% O_2.

Restrictions on waste constituents proposed for the shakedown period are that no F020-F028 wastes will be incinerated, and that metals feedrates will be limited to Tier I limits.

The high temperatures and residence times provided by the system will destroy any Appendix VIII organic compound. The acid gas and particulate matter handling systems will be closely monitored to ensure compliance with 40 CFR 264.343. Because the performance standards for DRE, HCl and particulate matter will be met by the indicated monitoring provisions, operation during the shakedown period will not pose a threat to human health or the environment. Thus, no restriction on waste constituents other than those proposed above are believed necessary during the pre-trial-burn (shakedown) period.

The following restrictions are proposed on waste feedrates during this period:

- No combination of waste and/or fuel introduced into the SCC will exceed the design heat release rate of 40 MM Btu/hr.
- No combination of waste and/or fuel introduced into the rotary kiln will exceed the design heat release rate of 75 MM Btu/hr.
- No combination of total waste and/or fuel introduced into the entire incinerator will exceed the overall system design heat release of 75 MM Btu/hr.

In order to shake down the system, it will be necessary to test the burners and the waste feed mechanisms at a wide variety of rates and, in particular, the anticipated maximum rates. To achieve these maximum feedrates, wastes with low heating values must be used so that the design heat release of the system will not be exceeded; however, because the system temperatures will be 1400°F (or higher) for the rotary kiln and 1800°F (or higher) for the SCC, and since the residence time will be at least two seconds in the SCC with high combustion gas O_2 content, organic material will be fully destroyed even when the waste is being fired at the maximum feedrate. In order to fully shake down the system before the trial burn, therefore, no restrictions other than the maximum heat release are proposed on the waste feedrate.

During the shakedown period, the CO level in the combustion gas will be monitored. The CO level will not exceed 100 ppm based on a 60-minute rolling average during this period. If this level is exceeded, waste feed will be automatically cut off.

As required by 40 CFR 264.345, hazardous waste will not be fed into the incinerator during startup. All system temperatures, excess air, CO and other parameters will be stabilized prior to introducing any hazardous waste. Hazardous waste will also not be fed into the incinerator during shutdown.

The control of fugitive emissions from the combustion zone during the shakedown period will be accomplished by maintaining a negative pressure in the combustion system.

All the components of the automatic waste feed cutoff system will be fully operational before initiating operation on hazardous waste. As required by 40 CFR 264.347(c), the waste feed cutoff system will be tested weekly, and the results will be recorded in the operations log. The critical waste feed cutoffs discussed in this section will be tested on a rotating weekly basis (one of the cutoffs will be checked each week).

All other monitoring and inspection provisions of 40 CFR 264.347 will be met during this interim operations period. The incineration system and associated equipment will be visually inspected each day for leaks, spills and fugitive emissions, as discussed in the Inspection Plan, Section F-2.

Table 7.0 compares the regulatory requirements of 40 CFR 270.62(a) and (a)(1) with the proposed action/controls to provide compliance with each section. Accordingly, the operation of the system in the period between startup and the trial burn will not pose a threat to human health or the environment.

7.1.2 Startup Procedures

The following procedure will ensure that the incinerator is at steady-state permitted operational conditions before waste is introduced to the system. The major tasks involved in a normal startup are as follows:

1. Prepare for startup.
2. Verify that instrumentation and control systems are operational. Confirm that continuous emissions monitors are functioning properly.
3. Start ID fan and combustion air fans. Establish draft control in "AUTOMATIC."
4. Start process water flow and lime slurry recirculation flow to the SDA.
5. Start one SCC burner on auxiliary fuel. Set burner on low fire.
6. Start kiln ash conveyor and kiln rotation. Start process water flow to ash conveyor sump.
7. Start kiln burner on auxiliary fuel. Set burner at low fire.
8. Start bringing combustion chamber operating temperatures up to normal following heat-up schedule in Operations Manual. Raise temperatures in "AUTOMATIC."
9. Start fabric filter pulse-cleaning cycles and dry solids conveyors. Initiate lime slurry flow to SDA atomizer.
10. Verify normal operation of SDA.
11. When combustion temperatures are in normal range, verify that all waste feed cutoffs (permissives) are clear.

12. Start one or more SCC burners on high-Btu liquid waste while maintaining normal temperature. Place on "AUTOMATIC."
13. Convert kiln burner to high-Btu liquid waste and maintain normal temperature. Place on "AUTOMATIC."
14. Start one or more low-Btu or sludge waste flows to kiln nozzles. Verify that temperature stabilizes in normal range as defined in Operations Manual.
15. Start bulk or containerized solids feed. Verify that temperature stabilizes in normal range. Readjust other waste feeds if necessary.

7.2 SHUTDOWN

7.2.1 General

If incinerator operating conditions deviate from acceptable ranges, the automatic interlock system will interrupt waste feeds by either closing automatic block valves in the feed lines, and stopping the bulk and containerized solids feed. This situation will be called to the operator's attention by audible and visible alarms. The operator's actions following such an event will be as follows:

1. Continue operation of an SCC burner on auxiliary fuel to maintain compliance temperatures. One burner will have remained on with auxiliary fuel during waste feed cutoff.
2. Continue or start operation of kiln burner on auxiliary fuel to maintain compliant temperatures.
3. Locate and correct cause of problem.
4. Return system to permissible operating conditions. Ensure that all interlocks for waste feed have cleared.
5. Restart waste feeds per standard hot startup instructions in Operations Manual. The first two steps will ensure complete combustion of any residual organics after waste feed cutoff.

An interlock-initiated waste feed cutoff will normally result in no excess emissions. In some cases, when an emissions monitor has initiated the cutoff, a small amount of CO above the normal levels may be emitted, but this amount is usually small and of limited duration. It would consist of the increment above the level that caused the cutoff, for the few seconds that it would take for the gases to clear the system.

7.2.2 Emergency Shutdown

If at any time the operations or maintenance personnel detect a severe abnormal operating condition or a condition of imminent damage to the equipment or impermissible emissions, a total system shutdown may be initiated by pressing the master "STOP" button on the control panel or pressing the ID fan "STOP" button in the field.

As previously described, a complete shutdown will also be automatically initiated in case of a control or electric power failure, an ID fan failure, rotary atomizer failure or high outlet SDA temperature.

An emergency shutdown can result in damage to the equipment and minor emissions to the atmosphere; therefore, it should be avoided whenever possible by a feed cutoff or a controlled shutdown. An emergency shutdown will immediately stop all waste and fuel feeds and the combustion air and ID fans. The kiln drive and the ash conveyor will continue to operate if power is available.

7.2.3 Normal Shutdown

Normal shutdown procedures should be followed for any scheduled activity which requires that the incinerator be off line and accessible to maintenance personnel or for entry into equipment items. Normal shutdown includes the following major activities:

1. Shut off all waste feed streams, liquids and solids.
2. Reduce system temperatures following normal refractory cool-down schedule.
3. Shut off auxiliary fuels.

Detailed activities are as follows:

1. Shut down solids and sludge feeds.
2. Wait 30 minutes for combustion of solids in kiln.
3. Increase kiln rotation to 100%.
4. Stop liquid waste feeds.
5. Switch kiln and SCC burners to auxiliary fuel.
6. Stop all waste recirculation pumps.

7. Ten minutes after stopping liquid waste feeds, begin reducing kiln and SCC temperatures following normal refractory cool-down schedule.

8. When SCC exit gas temperature is below 1000°F,

    - Shut off all burners.
    - Stop ID fan.
    - Verify that air blowers and rotary atomizer have stopped.

9. When kiln exit gas temperature is below 500°F, stop kiln rotation and shut off ash conveyor.

7.2.4 Controlling Emissions During Shutdown

In a normal shutdown, emissions will not be above normal levels. The temperature of the SCC will be maintained within the compliant range until the solids charge in the kiln is burned out and discharged. The APCE will remain on line for the duration of the shutdown period.

8.0 POST-TRIAL-BURN OPERATION

This section fulfills the requirements of 270.62(c)(1) and discusses planned incinerator operation during the period between completion of the trial burn and before receipt of a final permit.

During the trial burn, the incineration system will have been run at a wide variety of conditions. It is proposed that a CO emission of less than 100 ppm on a one-hour rolling average, for a given test conducted during the trial burn, will be used to assume that the DRE was achieved during the test; therefore, the tested conditions (temperatures, waste feedrates, etc.) will be used as operational conditions with regard to the DRE until final analytical test results are available. CO emissions for each test will be received by the permitted authority within three days of completion of the trial burn. During this three-day period, operation will be conducted in accordance with pre-trial-burn parameters.

Demonstration of the performance standards for HCl and particulate matter will be identical to the proposed pre-trial-burn operating parameters. These are the best indicators that will be available until the final test results are available.

During the post-trial-burn operational period, it is proposed to continue with the 100 ppm one-hour rolling average CO level proposed for the pre-trial-burn stage. This is low enough to ensure proper combustion, but high enough to allow for CO spikes that will occur during changes in temperature, feedrate, air flow and waste composition. This continuously monitored variable will be used to correlate incinerator performance with DRE in the post-trial-burn period.

The same restrictions on waste constituents proposed for the pre-trial-burn phase are proposed for the post-trial-burn phase; i.e., no waste regulated under 40 CFR 761 will be incinerated. The compounds selected as POHCs are the most difficult compounds to incinerate that could reasonably be selected. Achieving a CO emission of less than 100 ppm for these compounds indicates that the CO emission would also be less than 100 ppm for compounds that are more easily incinerated than the POHCs. The DRE should also be achieved for more easily incinerated compounds; therefore, no other restrictions on waste constituents will be necessary.

The same CO emission standard is proposed for restriction on waste feedrates; that is, the waste feedrate through a given mechanism will not exceed rates demonstrated during tests that achieve a CO emission of less than 100 ppm. Because the CO emission will be demonstrated at the maximum feedrates used during the trial burn, and because it will be less difficult to incinerate wastes at lower feedrates, no other restrictions on waste feedrates are necessary or proposed.

The combustion gas velocity will not exceed those tested conditions that demonstrated a CO emission of less than 100 ppm.

Temperatures in both the kiln and SCC will not be below these tests that demonstrate the 100-ppm CO emission. In compliance with 264.345(c), hazardous waste will not be fed into the incinerator until the demonstrated temperatures, excess air rates and other parameters have been reached.

The control of fugitive emission during this period of time is unchanged from previous discussions.

The automatic waste feed cutoff system will be fully operational. The demonstrated temperature and combustion gas flow rates will be incorporated into the automatic waste cutoff for this period of operation. The automatic waste feed cutoff system will be tested on a rotating weekly basis as discussed in Section 2.2.7(b).

Table 8.0 summarizes the proposed operating parameters for this phase of operation in comparison with regulatory requirements of 270.62(c)(1).

Table 8.0
Post-trial-burn Operating Conditions

ITEM		REGULATORY REFERENCE	COMPLIANCE DEMONSTRATION/ACTION
1.	Performance standards	269,62(c)(1) 264.343*	
	a. DRE		Operations restricted to operating parameters which demonstrate a CO emission of less than 100 ppm on a one-hour rolling average.
	b. HCl		HCl emissions of less than 100 ppm on one-hour rolling average
	c. Particulate matter		Opacity less than 20%.
2.	Restriction on waste constituents	270.62(c)(1)	F020-F028 wastes will not be incinerated. Metals feedrates will be limited to Tier I rates.
3.	Restriction on waste feedrate	270.62(c)(1)	Not to exceed that which was demonstrated under Item 1 above.
4.	CO level on combustion gas	270.62(c)(1) 264.345(b)(2)*	Not to exceed that which demonstrated under Item 1 above.
5.	Combustion temperature	270.62(c)(1) 264.345(b)(3)*	Not below that which was demonstrated under Item 1 above.
6.	Indication of combustion gas velocity	270.62(c)(1) 264.345(b)(4)*	Not to exceed that which was demonstrated under Item 1 above.
7.	Startup and shutdown periods	270.62(c)(1) 264.345(c)*	No hazardous waste will be fed to the incinerator during periods of startup or shutdown.

Table 8.0
Post-trial-burn Operating Conditions (Cont.)

ITEM		REGULATORY REFERENCE	COMPLIANCE DEMONSTRATION/ACTION
8.	Fugitive emissions	270.62(c)(1) 264.345(d)*	System will be under negative pressure.
9.	Automatic waste	270.62(c)(1) 264.234(e)* 264.357(c)*	Automatic waste feed cutoffs cutoffs will be fully operational. The cutoff system will be tested each week. Cutoff points to be based on parameters in Item 1 above.
10.	Design limits	270.62(c)(1) 264.345(b)(6)*	Design heat release will not be exceeded.

APPENDIX D-6

ATTACHMENT D-6-2

NOTE: The following reference methods:

- EPA Method 0010
- EPA Method 0030
- EPA Draft Metals Method

replace the following originally submitted methods:

- EPA Method 12
- EPA Method 101
- EPA Method 101A
- EPA Method 103
- EPA Method 104
- EPA Method 108

EPA METHOD 0010

Modified Method 5 Sampling Train

METHOD 0010

MODIFIED METHOD 5 SAMPLING TRAIN

1.0 SCOPE AND APPLICATION

1.1 This method is applicable to the determination of Destruction and Removal Efficiency (DRE) of semivolatile Principal Organic Hazardous Compounds (POHCs) from incineration systems (PHS, 1967). This method also may be used to determine particulate emission rates from stationary sources as per EPA Method 5 (see References at end of this method).

2.0 SUMMARY OF METHOD

2.1 Gaseous and particulate pollutants are withdrawn from an emission source at an isokinetic sampling rate and are collected in a multicomponent sampling train. Principal components of the train include a high-efficiency glass- or quartz-fiber filter and a packed bed of porous polymeric adsorbent resin. The filter is used to collect organic-laden particulate materials and the porous polymeric resin to adsorb semivolatile organic species. Semivolatile species are defined as compounds with boiling points $>100°C$.

2.2 Comprehensive chemical analyses of the collected sample are conducted to determine the concentration and identity of the organic materials.

3.0 INTERFERENCES

3.1 Oxides of nitrogen (NO_x) are possible interferents in the determination of certain water-soluble compounds such as dioxane, phenol, and urethane; reaction of these compounds with NO_x in the presence of moisture will reduce their concentration. Other possibilities that could result in positive or negative bias are (1) stability of the compounds in methylene chloride, (2) the formation of water-soluble organic salts on the resin in the presence of moisture, and (3) the solvent extraction efficiency of water-soluble compounds from aqueous media. Use of two or more ions per compound for qualitative and quantitative analysis can overcome interference at one mass. These concerns should be addressed on a compound-by-compound basis before using this method.

4.0 APPARATUS AND MATERIALS

4.1 Sampling train:

4.1.1 A schematic of the sampling train used in this method is shown in Figure 1. This sampling train configuration is adapted from EPA Method 5 procedures, and, as such, the majority of the required equipment

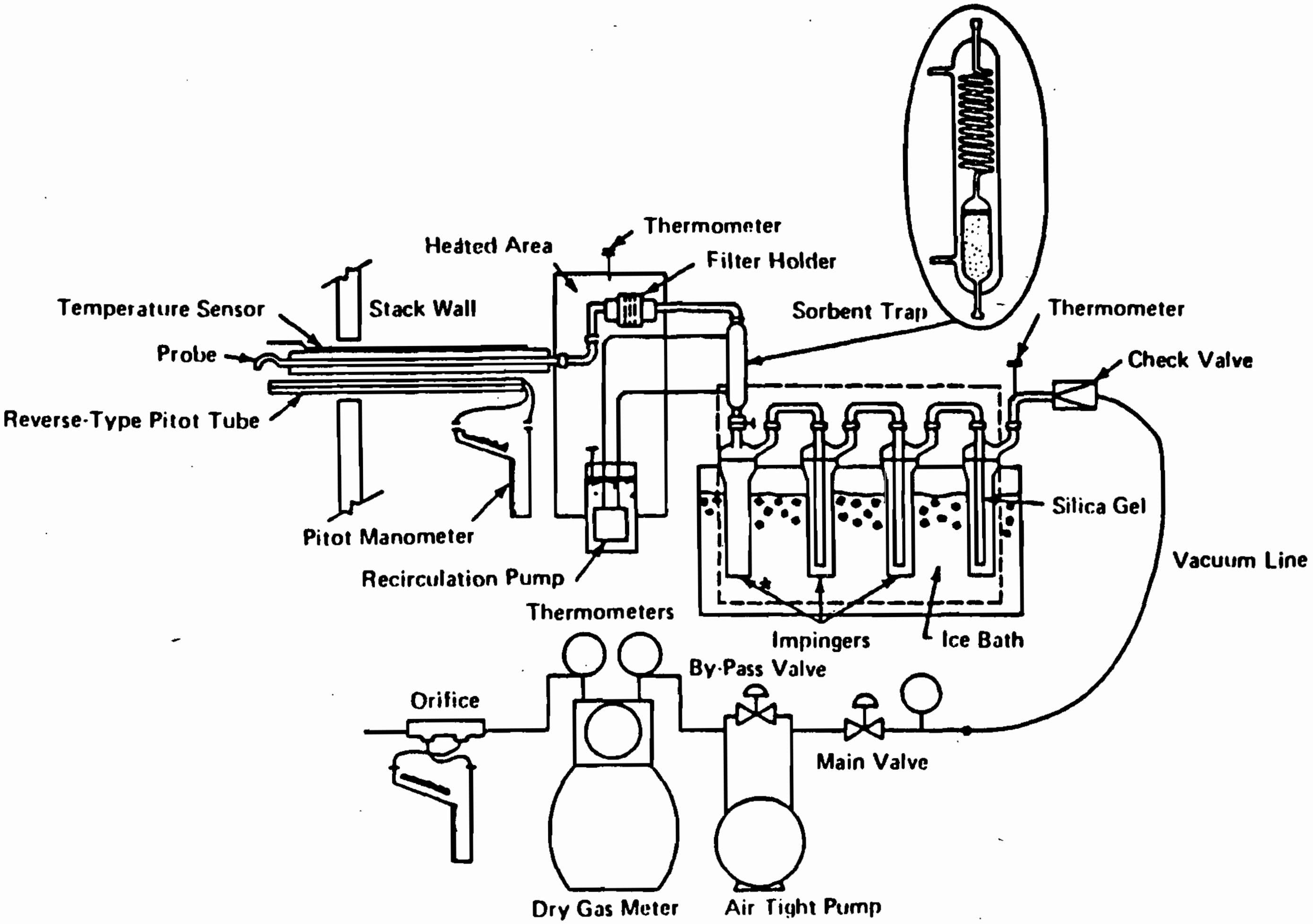

Figure 1. Modified Method 5 Sampling Train.

is identical to that used in EPA Method 5 determinations. The new components required are a condenser coil and a sorbent module, which are used to collect semivolatile organic materials that pass through the glass- or quartz-fiber filter in the gas phase.

4.1.2 Construction details for the basic train components are given in APTD-0581 (see Martin, 1971, in Section 13.0, References); commercial models of this equipment are also available. Specifications for the sorbent module are provided in the following subsections. Additionally, the following subsections list changes to APTD-0581 and identify allowable train configuration modifications.

4.1.3 Basic operating and maintenance procedures for the sampling train are described in APTD-0576 (see Rom, 1972, in Section 13.0, References). As correct usage is important in obtaining valid results, all users should refer to APTD-0576 and adopt the operating and maintenance procedures outlined therein unless otherwise specified. The sampling train consists of the components detailed below.

4.1.3.1 Probe nozzle: Stainless steel (316) or glass with sharp, tapered (30° angle) leading edge. The taper shall be on the outside to preserve a constant I.D. The nozzle shall be buttonhook or elbow design and constructed from seamless tubing (if made of stainless steel). Other construction materials may be considered for particular applications. A range of nozzle sizes suitable for isokinetic sampling should be available in increments of 0.16 cm (1/16 in.), e.g., 0.32-1.27 cm (1/8-1/2 in.), or larger if higher volume sampling trains are used. Each nozzle shall be calibrated according to the procedures outlined in Paragraph 9.1.

4.1.3.2 Probe liner: Borosilicate or quartz-glass tubing with a heating system capable of maintaining a gas temperature of 120 ± 14°C (248 ± 25°F) at the exit end during sampling. (The tester may opt to operate the equipment at a temperature lower than that specified.) Because the actual temperature at the outlet of the probe is not usually monitored during sampling, probes constructed according to APTD-0581 and utilizing the calibration curves of APTD-0576 (or calibrated according to the procedure outlined in APTD-0576) are considered acceptable. Either borosilicate or quartz-glass probe liners may be used for stack temperatures up to about 480°C (900°F). Quartz liners shall be used for temperatures between 480 and 900°C (900 and 1650°F). (The softening temperature for borosilicate is 820°C (1508°F), and for quartz 1500°C (2732°F).) Water-cooling of the stainless steel sheath will be necessary at temperatures approaching and exceeding 500°C.

4.1.3.3 Pitot tube: Type S, as described in Section 2.1 of EPA Method 2, or other appropriate devices (Vollaro, 1976). The pitot tube shall be attached to the probe to allow constant monitoring of the stack-gas velocity. The impact (high-pressure) opening plane of the pitot tube shall be even with or above the nozzle entry plane (see EPA Method 2, Figure 2-6b) during sampling. The Type S pitot tube assembly shall have a known coefficient, determined as outlined in Section 4 of EPA Method 2.

4.1.3.4 Differential pressure gauge: Inclined manometer or equivalent device as described in Section 2.2 of EPA Method 2. One manometer shall be used for velocity-head (ΔP) readings and the other for orifice differential pressure (ΔH) readings.

4.1.3.5 Filter holder: Borosilicate glass, with a glass frit filter support and a sealing gasket. The sealing gasket should be made of materials that will not introduce organic material into the gas stream at the temperature at which the filter holder will be maintained. The gasket shall be constructed of Teflon or materials of equal or better characteristics. The holder design shall provide a positive seal against leakage at any point along the filter circumference. The holder shall be attached immediately to the outlet of the cyclone or cyclone bypass.

4.1.3.6 Filter heating system: Any heating system capable of maintaining a temperature of 120 ± 14°C (248 ± 25°F) around the filter holder during sampling. Other temperatures may be appropriate for particular applications. Alternatively, the tester may opt to operate the equipment at temperatures other than that specified. A temperature gauge capable of measuring temperature to within 3°C (5.4°F) shall be installed so that the temperature around the filter holder can be regulated and monitored during sampling. Heating systems other than the one shown in APTD-0581 may be used.

4.1.3.7 Organic sampling module: This unit consists of three sections, including a gas-conditioning section, a sorbent trap, and a condensate knockout trap. The gas-conditioning system shall be capable of conditioning the gas leaving the back half of the filter holder to a temperature not exceeding 20°C (68°F). The sorbent trap shall be sized to contain approximately 20 g of porous polymeric resin (Rohm and Haas XAD-2 or equivalent) and shall be jacketed to maintain the internal gas temperature at 17 ± 3°C (62.5 ± 5.4°F). The most commonly used coolant is ice water from the impinger ice-water bath, constantly circulated through the outer jacket, using rubber or plastic tubing and a peristaltic pump. The sorbent trap should be outfitted with a glass well or depression, appropriately sized to accommodate a small thermocouple in the trap for monitoring the gas entry temperature. The condensate knockout trap shall be of sufficient size to collect the condensate following gas conditioning. The organic module components shall be oriented to direct the flow of condensate formed vertically downward from the conditioning section, through the adsorbent media, and into the condensate knockout trap. The knockout trap is usually similar in appearance to an empty impinger directly underneath the sorbent module; it may be oversized but should have a shortened center stem (at a minimum, one-half the length of the normal impinger stems) to collect a large volume of condensate without bubbling and overflowing into the impinger train. All surfaces of the organic module wetted by the gas sample shall be fabricated of borosilicate glass, Teflon, or other inert materials. Commercial versions of the complete organic module are not currently available, but may be assembled from commercially available laboratory glassware and a custom-fabricated sorbent trap. Details of two acceptable designs are shown in Figures 2 and 3 (the thermocouple well is shown in Figure 2).

4.1.3.8 Impinger train: To determine the stack-gas moisture content, four 500-mL impingers, connected in series with leak-free ground-glass joints, follow the knockout trap. The first, third, and fourth impingers shall be of the Greenburg-Smith design, modified by replacing the tip with a 1.3-cm (1/2-in.) I.D. glass tube extending about 1.3 cm (1/2 in.) from the bottom of the outer cylinder. The second impinger shall be of the Greenburg-Smith design with the standard tip. The first and second impingers shall contain known quantities of water or appropriate trapping solution. The third shall be empty or charged with a caustic solution, should the stack gas contain hydrochloric acid (HCl). The fourth shall contain a known weight of silica gel or equivalent desiccant.

4.1.3.9 Metering system: The necessary components are a vacuum gauge, leak-free pump, thermometers capable of measuring temperature to within 3°C (5.4°F), dry-gas meter capable of measuring volume to within 1%, and related equipment, as shown in Figure 1. At a minimum, the pump should be capable of 4 cfm free flow, and the dry-gas meter should have a recording capacity of 0-999.9 cu ft with a resolution of 0.005 cu ft. Other metering systems capable of maintaining sampling rates within 10% of isokineticity and of determining sample volumes to within 2% may be used. The metering system must be used in conjunction with a pitot tube to enable checks of isokinetic sampling rates. Sampling trains using metering systems designed for flow rates higher than those described in APTD-0581 and APTD-0576 may be used, provided that the specifications of this method are met.

4.1.3.10 Barometer: Mercury, aneroid, or other barometer capable of measuring atmospheric pressure to within 2.5 mm Hg (0.1 in. Hg). In many cases the barometric reading may be obtained from a nearby National Weather Service station, in which case the station value (which is the absolute barometric pressure) is requested and an adjustment for elevation differences between the weather station and sampling point is applied at a rate of minus 2.5 mm Hg (0.1 in. Hg) per 30-m (100 ft) elevation increase (vice versa for elevation decrease).

4.1.3.11 Gas density determination equipment: Temperature sensor and pressure gauge (as described in Sections 2.3 and 2.4 of EPA Method 2), and gas analyzer, if necessary (as described in EPA Method 3). The temperature sensor ideally should be permanently attached to the pitot tube or sampling probe in a fixed configuration such that the tip of the sensor extends beyond the leading edge of the probe sheath and does not touch any metal.

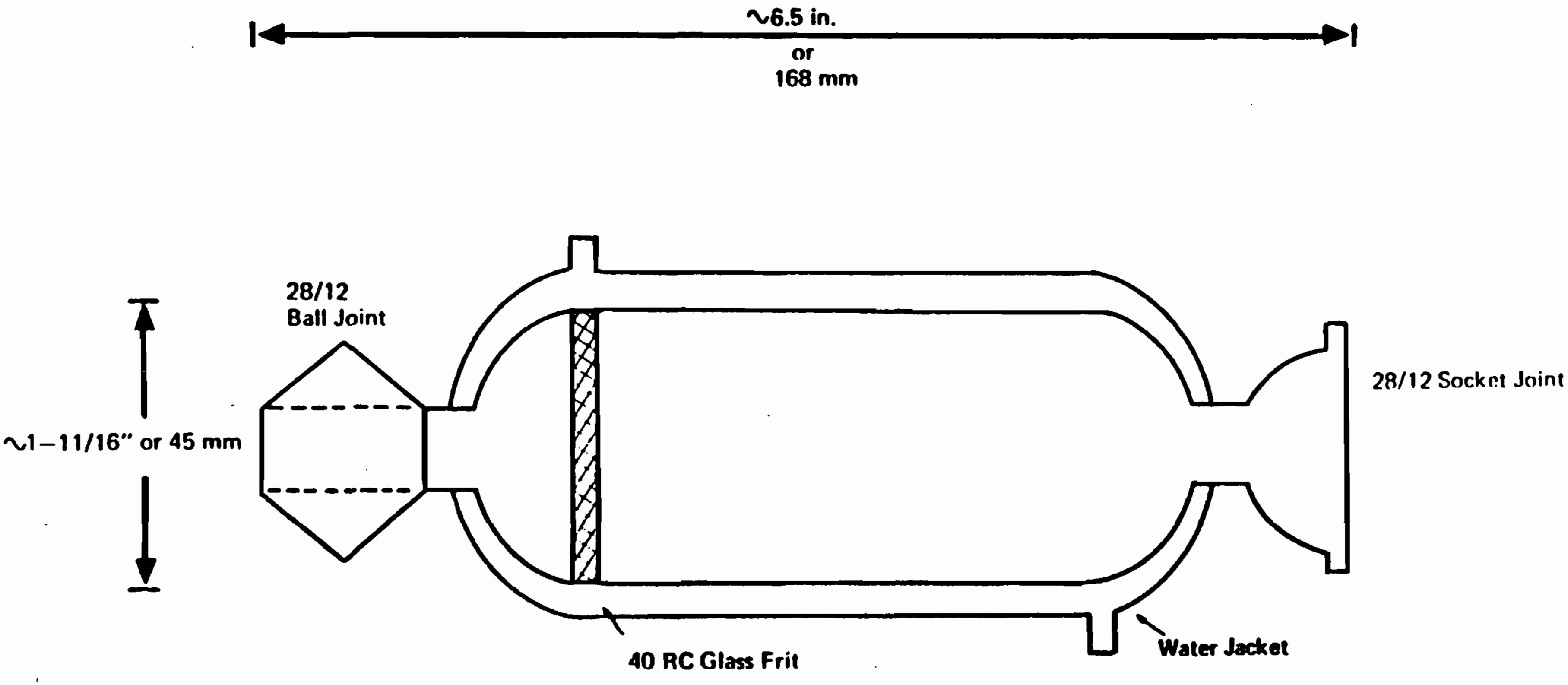

Figure 2. Adsorbent Sampling System.

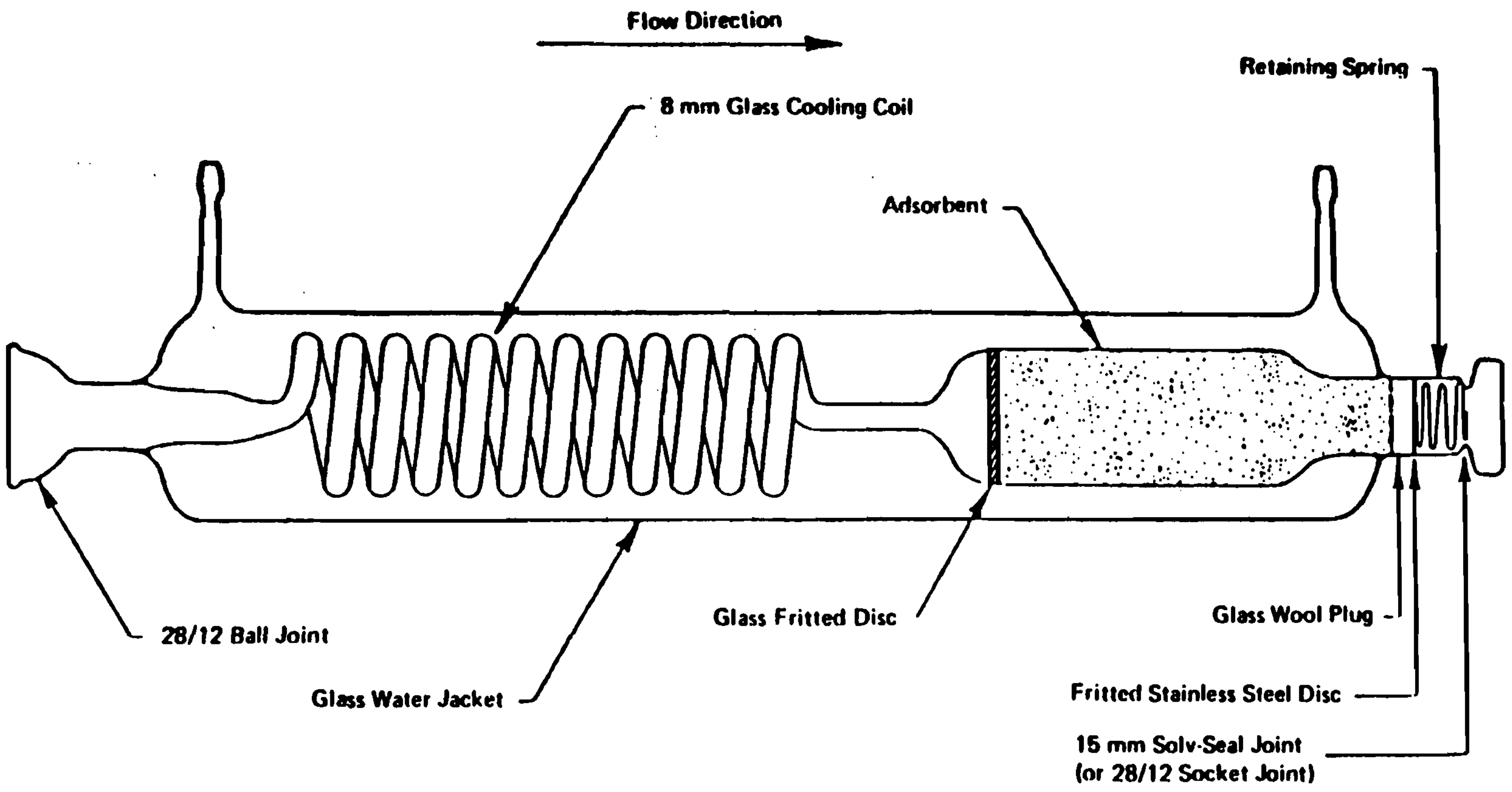

Figure 3. Adsorbent Sampling System.

Alternatively, the sensor may be attached just prior to use in the field. Note, however, that if the temperature sensor is attached in the field, the sensor must be placed in an interference-free arrangement with respect to the Type S pitot tube openings (see EPA Method 2, Figure 2-7). As a second alternative, if a difference of no more than 1% in the average velocity measurement is to be introduced, the temperature gauge need not be attached to the probe or pitot tube.

4.1.3.12 Calibration/field-preparation record: A permanently bound laboratory notebook, in which duplicate copies of data may be made as they are being recorded, is required for documenting and recording calibrations and preparation procedures (i.e., filter and silica gel tare weights, clean XAD-2, quality assurance/quality control check results, dry-gas meter, and thermocouple calibrations, etc.). The duplicate copies should be detachable and should be stored separately in the test program archives.

4.2 Sample Recovery:

4.2.1 **Probe liner:** Probe nozzle and organic module conditioning section brushes; nylon bristle brushes with stainless steel wire handles are required. The probe brush shall have extensions of stainless steel, Teflon, or inert material at least as long as the probe. The brushes shall be properly sized and shaped to brush out the probe liner, the probe nozzle, and the organic module conditioning section.

4.2.2 **Wash bottles:** Three. Teflon or glass wash bottles are recommended; polyethylene wash bottles should not be used because organic contaminants may be extracted by exposure to organic solvents used for sample recovery.

4.2.3 **Glass sample storage containers:** Chemically resistant, borosilicate amber and clear glass bottles, 500-mL or 1,000-mL. Bottles should be tinted to prevent action of light on sample. Screw-cap liners shall be either Teflon or constructed so as to be leak-free and resistant to chemical attack by organic recovery solvents. Narrow-mouth glass bottles have been found to exhibit less tendency toward leakage.

4.2.4 **Petri dishes:** Glass, sealed around the circumference with wide (1-in.) Teflon tape, for storage and transport of filter samples.

4.2.5 **Graduated cylinder and/or balances:** To measure condensed water to the nearest 1 mL or 1 g. Graduated cylinders shall have subdivisions not >2 mL. Laboratory triple-beam balances capable of weighing to ±0.5 g or better are required.

4.2.6 **Plastic storage containers:** Screw-cap polypropylene or polyethylene containers to store silica gel.

4.2.7 **Funnel and rubber policeman:** To aid in transfer of silica gel to container (not necessary if silica gel is weighed in field).

4.2.8 Funnels: Glass, to aid in sample recovery.

4.3 Filters: Glass- or quartz-fiber filters, without organic binder, exhibiting at least 99.95% efficiency (<0.05% penetration) on 0.3-um dioctyl phthalate smoke particles. The filter efficiency test shall be conducted in accordance with ASTM standard method D2986-71. Test data from the supplier's quality control program are sufficient for this purpose. In sources containing SO_2 or SO_3, the filter material must be of a type that is unreactive to SO_2 or SO_3. Reeve Angel 934 AH or Schleicher and Schwell #3 filters work well under these conditions.

4.4 Crushed ice: Quantities ranging from 10-50 lb may be necessary during a sampling run, depending on ambient air temperature.

4.5 Stopcock grease: Solvent-insoluble, heat-stable silicone grease. Use of silicone grease upstream of the module is not permitted, and amounts used on components located downstream of the organic module shall be minimized. Silicone grease usage is not necessary if screw-on connectors and Teflon sleeves or ground-glass joints are used.

4.6 Glass wool: Used to plug the unfritted end of the sorbent module. The glass-wool fiber should be solvent-extracted with methylene chloride in a Soxhlet extractor for 12 hr and air-dried prior to use.

5.0 REAGENTS

5.1 Adsorbent resin: Porous polymeric resin (XAD-2 or equivalent) is recommended. These resins shall be cleaned prior to their use for sample collection. Appendix A of this method should be consulted to determine appropriate precleaning procedure. For best results, resin used should not exhibit a blank of higher than 4 mg/kg of total chromatographable organics (TCO) (see Appendix B) prior to use. Once cleaned, resin should be stored in an airtight, wide-mouth amber glass container with a Teflon-lined cap or placed in one of the glass sorbent modules tightly sealed with Teflon film and elastic bands. The resin should be used within 4 wk of the preparation.

5.2 Silica gel: Indicating type, 6-16 mesh. If previously used, dry at 175°C (350°F) for 2 hr before using. New silica gel may be used as received. Alternatively, other types of desiccants (equivalent or better) may be used, subject to the approval of the Administrator.

5.3 Impinger solutions: Distilled organic-free water (Type II) shall be used, unless sampling is intended to quantify a particular inorganic gaseous species. If sampling is intended to quantify the concentration of additional species, the impinger solution of choice shall be subject to Administrator approval. This water should be prescreened for any compounds of interest. One hundred mL will be added to the specified impinger; the third impinger in the train may be charged with a basic solution (1 N sodium hydroxide or sodium acetate) to protect the sampling pump from acidic gases. Sodium acetate should be used when large sample volumes are anticipated because sodium hydroxide will react with carbon dioxide in aqueous media to form sodium carbonate, which may possibly plug the impinger.

5.4 Sample recovery reagents:

5.4.1 **Methylene chloride:** Distilled-in-glass grade is required for sample recovery and cleanup (see Note to 5.4.2 below).

5.4.2 **Methyl alcohol:** Distilled-in-glass grade is required for sample recovery and cleanup.

NOTE: Organic solvents from metal containers may have a high residue blank and should not be used. Sometimes suppliers transfer solvents from metal to glass bottles; thus blanks shall be run prior to field use and only solvents with low blank value (<0.001%) shall be used.

5.4.3 **Water:** Water (Type II) shall be used for rinsing the organic module and condenser component.

6.0 SAMPLE COLLECTION, PRESERVATION, AND HANDLING

6.1 Because of complexity of this method, field personnel should be trained in and experienced with the test procedures in order to obtain reliable results.

6.2 Laboratory preparation:

6.2.1 All the components shall be maintained and calibrated according to the procedure described in APTD-0576, unless otherwise specified.

6.2.2 Weigh several 200- to 300-g portions of silica gel in airtight containers to the nearest 0.5 g. Record on each container the total weight of the silica gel plus containers. As an alternative to preweighing the silica gel, it may instead be weighed directly in the impinger or sampling holder just prior to train assembly.

6.2.3 Check filters visually against light for irregularities and flaws or pinhole leaks. Label the shipping containers (glass Petri dishes) and keep the filters in these containers at all times except during sampling and weighing.

6.2.4 Desiccate the filters at 20 ± 5.6°C (68 ± 10°F) and ambient pressure for at least 24 hr, and weigh at intervals of at least 6 hr to a constant weight (i.e., <0.5-mg change from previous weighing), recording results to the nearest 0.1 mg. During each weighing the filter must not be exposed for more than a 2-min period to the laboratory atmosphere and relative humidity above 50%. Alternatively (unless otherwise specified by the Administrator), the filters may be oven-dried at 105°C (220°F) for 2-3 hr, desiccated for 2 hr, and weighed.

6.3 Preliminary field determinations:

6.3.1 Select the sampling site and the minimum number of sampling points according to EPA Method 1 or as specified by the Administrator. Determine the stack pressure, temperature, and range of velocity heads using EPA Method 2. It is recommended that a leak-check of the pitot lines (see EPA Method 2, Section 3.1) be performed. Determine the stack-gas moisture content using EPA Approximation Method 4 or its alternatives to establish estimates of isokinetic sampling-rate settings. Determine the stack-gas dry molecular weight, as described in EPA Method 2, Section 3.6. If integrated EPA Method 3 sampling is used for molecular weight determination, the integrated bag sample shall be taken simultaneously with, and for the same total length of time as, the sample run.

6.3.2 Select a nozzle size based on the range of velocity heads so that it is not necessary to change the nozzle size in order to maintain isokinetic sampling rates. During the run, do not change the nozzle. Ensure that the proper differential pressure gauge is chosen for the range of velocity heads encountered (see Section 2.2 of EPA Method 2).

6.3.3 Select a suitable probe liner and probe length so that all traverse points can be sampled. For large stacks, to reduce the length of the probe, consider sampling from opposite sides of the stack.

6.3.4 A minimum of 3 dscm (105.9 dscf) of sample volume is required for the determination of the Destruction and Removal Efficiency (DRE) of POHCs from incineration systems. Additional sample volume shall be collected as necessitated by analytical detection limit constraints. To determine the minimum sample volume required, refer to sample calculations in Section 10.0.

6.3.5 Determine the total length of sampling time needed to obtain the identified minimum volume by comparing the anticipated average sampling rate with the volume requirement. Allocate the same time to all traverse points defined by EPA Method 1. To avoid timekeeping errors, the length of time sampled at each traverse point should be an integer or an integer plus one-half min.

6.3.6 In some circumstances (e.g., batch cycles) it may be necessary to sample for shorter times at the traverse points and to obtain smaller gas-sample volumes. In these cases, the Administrator's approval must first be obtained.

6.4 Preparation of collection train:

6.4.1 During preparation and assembly of the sampling train, keep all openings where contamination can occur covered with Teflon film or aluminum foil until just prior to assembly or until sampling is about to begin.

6.4.2 Fill the sorbent trap section of the organic module with approximately 20 g of clean adsorbent resin. While filling, ensure that the trap packs uniformly, to eliminate the possibility of channeling. When freshly cleaned, many adsorbent resins carry a static charge, which will cause clinging to trap walls. This may be minimized by filling the trap in the presence of an antistatic device. Commercial antistatic devices include Model-204 and Model-210 manufactured by the 3M Company, St. Paul, Minnesota.

6.4.3 If an impinger train is used to collect moisture, place 100 mL of water in each of the first two impingers, leave the third impinger empty (or charge with caustic solution, as necessary), and transfer approximately 200-300 g of preweighed silica gel from its container to the fourth impinger. More silica gel may be used, but care should be taken to ensure that it is not entrained and carried out from the impinger during sampling. Place the container in a clean place for later use in the sample recovery. Alternatively, the weight of the silica gel plus impinger may be determined to the nearest 0.5 g and recorded.

6.4.4 Using a tweezer or clean disposable surgical gloves, place a labeled (identified) and weighed filter in the filter holder. Be sure that the filter is properly centered and the gasket properly placed to prevent the sample gas stream from circumventing the filter. Check the filter for tears after assembly is completed.

6.4.5 When glass liners are used, install the selected nozzle using a Viton-A O-ring when stack temperatures are <260°C (500°F) and a woven glass-fiber gasket when temperatures are higher. See APTD-0576 (Rom, 1972) for details. Other connecting systems utilizing either 316 stainless steel or Teflon ferrules may be used. When metal liners are used, install the nozzle as above, or by a leak-free direct mechanical connection. Mark the probe with heat-resistant tape or by some other method to denote the proper distance into the stack or duct for each sampling point.

6.4.6 Set up the train as in Figure 1. During assembly, do not use any silicone grease on ground-glass joints that are located upstream of the organic module. A very light coating of silicone grease may be used on all ground-glass joints that are located downstream of the organic module, but it should be limited to the outer portion (see APTD-0576) of the ground-glass joints to minimize silicone-grease contamination. Subject to the approval of the Administrator, a glass cyclone may be used between the probe and the filter holder when the total particulate catch is expected to exceed 100 mg or when water droplets are present in the stack. The organic module condenser must be maintained at a temperature of 17 ± 3°C. Connect all temperature sensors to an appropriate potentiometer/display unit. Check all temperature sensors at ambient temperature.

6.4.7 Place crushed ice around the impingers and the organic module condensate knockout.

6.4.8 Turn on the sorbent module and condenser coil coolant recirculating pump and begin monitoring the sorbent module gas entry temperature. Ensure proper sorbent module gas entry temperature before proceeding and again before any sampling is initiated. It is extremely important that the XAD-2 resin temperature never exceed 50°C (122°F), because thermal decomposition will occur. During testing, the XAD-2 temperature must not exceed 20°C (68°F) for efficient capture of the semivolatile species of interest.

6.4.9 Turn on and set the filter and probe heating systems at the desired operating temperatures. Allow time for the temperatures to stabilize.

6.5 Leak-check procedures

6.5.1 Pre-test leak-check:

6.5.1.1 Because the number of additional intercomponent connections in the Semi-VOST train (over the M5 Train) increases the possibility of leakage, a pre-test leak-check is required.

6.5.1.2 After the sampling train has been assembled, turn on and set the filter and probe heating systems at the desired operating temperatures. Allow time for the temperatures to stabilize. If a Viton A O-ring or other leak-free connection is used in assembling the probe nozzle to the probe liner, leak-check the train at the sampling site by plugging the nozzle and pulling a 381-mm Hg (15-in. Hg) vacuum.
(NOTE: A lower vacuum may be used, provided that it is not exceeded during the test.)

6.5.1.3 If an asbestos string is used, do not connect the probe to the train during the leak-check. Instead, leak-check the train by first attaching a carbon-filled leak-check impinger (shown in Figure 4) to the inlet of the filter holder (cyclone, if applicable) and then plugging the inlet and pulling a 381-mm Hg (15-in. Hg) vacuum. (Again, a lower vacuum may be used, provided that it is not exceeded during the test.) Then, connect the probe to the train and leak-check at about 25-mm Hg (1-in. Hg) vacuum; alternatively, leak-check the probe with the rest of the sampling train in one step at 381-mm Hg (15-in. Hg) vacuum. Leakage rates in excess of 4% of the average sampling rate or >0.00057 m^3/min (0.02 cfm), whichever is less, are unacceptable.

6.5.1.4 The following leak-check instructions for the sampling train described in APTD-0576 and APTD-0581 may be helpful. Start the pump with fine-adjust valve fully open and coarse-adjust valve completely closed. Partially open the coarse-adjust valve and slowly close the fine-adjust valve until the desired vacuum is reached. Do not reverse direction of the fine-adjust valve; this will cause water to back up into the organic module. If the desired vacuum is exceeded, either leak-check at this higher vacuum or end the leak-check, as shown below, and start over.

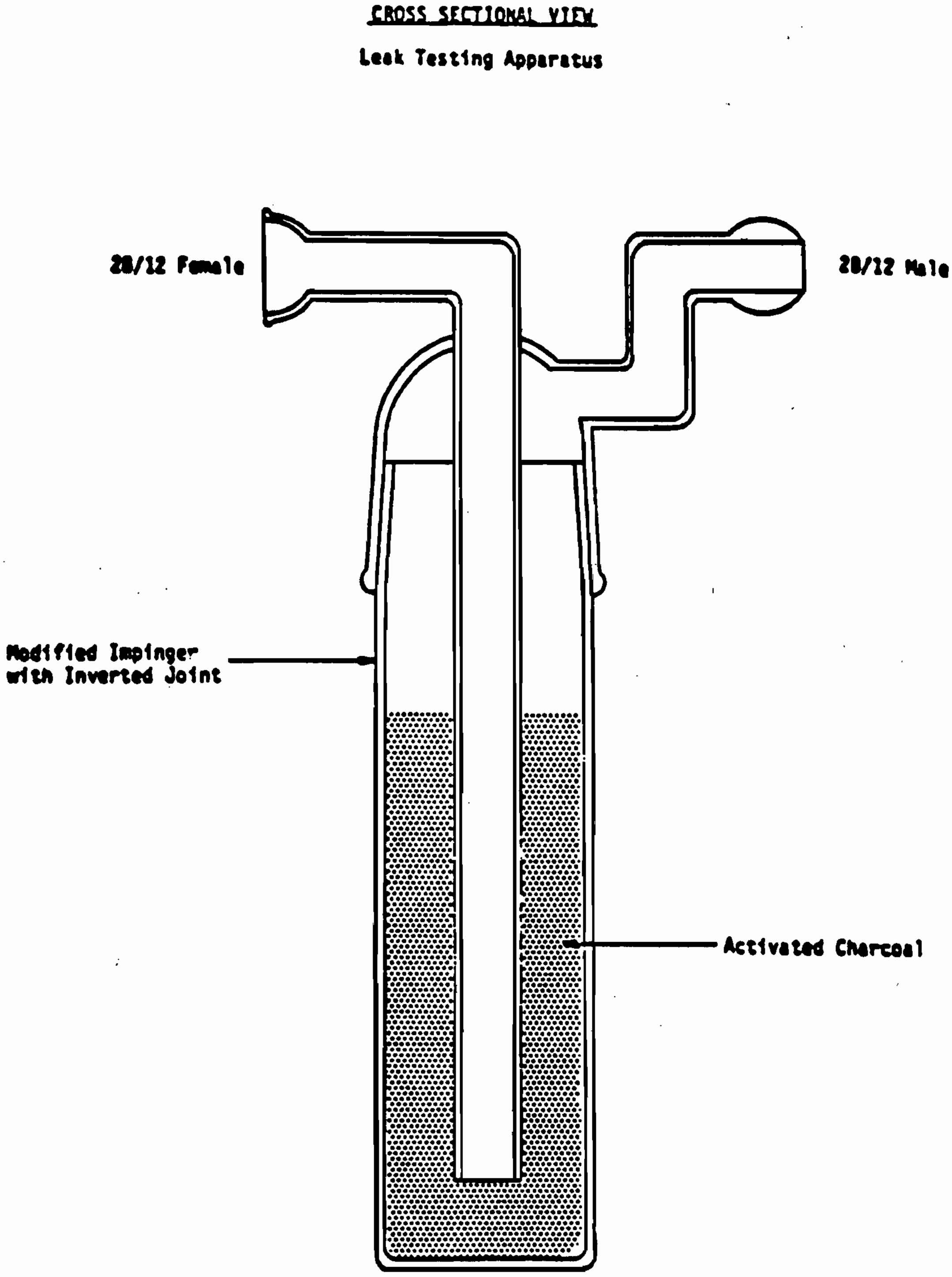

Figure 4. Leak-check impinger.

6.5.1.5 When the leak-check is completed, first slowly remove the plug from the inlet to the probe, filter holder, or cyclone (if applicable). When the vacuum drops to 127 mm (5 in.) Hg or less, immediately close the coarse-adjust valve. Switch off the pumping system and reopen the fine-adjust valve. Do not reopen the fine-adjust valve until the coarse-adjust valve has been closed. This prevents the water in the impingers from being forced backward into the organic module and silica gel from being entrained backward into the third impinger.

6.5.2 Leak-checks during sampling run:

6.5.2.1 If, during the sampling run, a component (e.g., filter assembly, impinger, or sorbent trap) change becomes necessary, a leak-check shall be conducted immediately after the interruption of sampling and before the change is made. The leak-check shall be done according to the procedure outlined in Paragraph 6.5.1, except that it shall be done at a vacuum greater than or equal to the maximum value recorded up to that point in the test. If the leakage rate is found to be no greater than 0.00057 m^3/min (0.02 cfm) or 4% of the average sampling rate (whichever is less), the results are acceptable, and no correction will need to be applied to the total volume of dry gas metered. If a higher leakage rate is obtained, the tester shall void the sampling run. (It should be noted that any "correction" of the sample volume by calculation by calculation reduces the integrity of the pollutant concentrations data generated and must be avoided.)

6.5.2.2 Immediately after a component change, and before sampling is reinitiated, a leak-check similar to a pre-test leak-check must also be conducted.

6.5.3 Post-test leak-check:

6.5.3.1 A leak-check is mandatory at the conclusion of each sampling run. The leak-check shall be done with the same procedures as those with the pre-test leak-check, except that it shall be conducted at a vacuum greater than or equal to the maximum value reached during the sampling run. If the leakage rate is found to be no greater than 0.00057 m^3/min (0.02 cfm) or 4% of the average sampling rate (whichever is less), the results are acceptable, and no correction need be applied to the total volume of dry gas metered. If, however, a higher leakage rate is obtained, the tester shall either record the leakage rate, correct the sample volume (as shown in the calculation section of this method), and consider the data obtained of questionable reliability, or void the sampling run.

6.6 Sampling-train operation:

6.6.1 During the sampling run, maintain an isokinetic sampling rate to within 10% of true isokinetic, unless otherwise specified by the Administrator. Maintain a temperature around the filter of 120 ± 14°C (248 ± 25°F) and a gas temperature entering the sorbent trap at a maximum of 20°C (68°F).

6.6.2 For each run, record the data required on a data sheet such as the one shown in Figure 5. Be sure to record the initial dry-gas meter reading. Record the dry-gas meter readings at the beginning and end of each sampling time increment, when changes in flow rates are made before and after each leak-check, and when sampling is halted. Take other readings required by Figure 5 at least once at each sample point during each time increment and additional readings when significant changes (20% variation in velocity-head readings) necessitate additional adjustments in flow rate. Level and zero the manometer. Because the manometer level and zero may drift due to vibrations and temperature changes, make periodic checks during the traverse.

6.6.3 Clean the stack access ports prior to the test run to eliminate the chance of sampling deposited material. To begin sampling, remove the nozzle cap, verify that the filter and probe heating systems are at the specified temperature, and verify that the pitot tube and probe are properly positioned. Position the nozzle at the first traverse point, with the tip pointing directly into the gas stream. Immediately start the pump and adjust the flow to isokinetic conditions. Nomographs, which aid in the rapid adjustment of the isokinetic sampling rate without excessive computations, are available. These nomographs are designed for use when the Type S pitot-tube coefficient is 0.84 ± 0.02 and the stack-gas equivalent density (dry molecular weight) is equal to 29 ± 4. APTD-0576 details the procedure for using the nomographs. If the stack-gas molecular weight and the pitot-tube coefficient are outside the above ranges, do not use the nomographs unless appropriate steps (Shigehara, 1974) are taken to compensate for the deviations.

6.6.4 When the stack is under significant negative pressure (equivalent to the height of the impinger stem), take care to close the coarse-adjust valve before inserting the probe into the stack, to prevent water from backing into the organic module. If necessary, the pump may be turned on with the coarse-adjust valve closed.

6.6.5 When the probe is in position, block off the openings around the probe and stack access port to prevent unrepresentative dilution of the gas stream.

6.6.6 Traverse the stack cross section, as required by EPA Method 1 or as specified by the Administrator, being careful not to bump the probe nozzle into the stack walls when sampling near the walls or when removing or inserting the probe through the access port, in order to minimize the chance of extracting deposited material.

6.6.7 During the test run, make periodic adjustments to keep the temperature around the filter holder and the organic module at the proper levels; add more ice and, if necessary, salt to maintain a temperature of <20°C (68°F) at the condenser/silica gel outlet. Also, periodically check the level and zero of the manometer.

Plant ____________________
Location ____________________
Operator ____________________
Date ____________________
Run No. ____________________
Sample Box No. ____________________
Meter Box No. ____________________
Meter H@ ____________________
C Factor ____________________
Pitot Tube Coefficient C_p ____________________

Schematic of Stack Cross Section

Ambient Temperature ____________________
Barometric Pressure ____________________
Assumed Moisture % ____________________
Probe Length, m (ft) ____________________
Nozzle Identification No. ____________________
Average Calibrated Nozzle Diameter, cm (in) ____________________
Probe Heater Setting ____________________
Leak Rate, m^3/min, (cfm) ____________________
Probe Liner Material ____________________
Static Pressure, mm Hg (in. Hg) ____________________
Filter No. ____________________

Traverse Point Number	Sampling Time (θ) min.	Vacuum mm Hg (in. Hg)	Stack Temperature (T_s) °C(°F)	Velocity Head (P_s) mm (in) H_2O	Pressure Differential Across Orifice Meter mm (H_2O) (in H_2O)	Gas Sample Volume m_3 (ft_3)	Gas Sample Temp. at Dry Gas Meter		Filter Holder Temperature °C(F°)	Temperature of Gas Entering Sorbent Trap °C(F°)	Temperature of Gas Leaving Condenser or Last Impinger
							Inlet °C(°F)	Outlet °C(F°)			
Total							Avg.	Avg.			
Average											

Figure 5. Particulate field data.

6.6.8 If the pressure drop across the filter or sorbent trap becomes too high, making isokinetic sampling difficult to maintain, the filter/sorbent trap may be replaced in the midst of a sample run. Using another complete filter holder/sorbent trap assembly is recommended, rather than attempting to change the filter and resin themselves. After a new filter/sorbent trap assembly is installed, conduct a leak-check. The total particulate weight shall include the summation of all filter assembly catches.

6.6.9 A single train shall be used for the entire sample run, except in cases where simultaneous sampling is required in two or more separate ducts or at two or more different locations within the same duct, or in cases where equipment failure necessitates a change of trains. In all other situations, the use of two or more trains will be subject to the approval of the Administrator.

6.6.10 Note that when two or more trains are used, separate analysis of the front-half (if applicable) organic-module and impinger (if applicable) catches from each train shall be performed, unless identical nozzle sizes were used on all trains. In that case, the front-half catches from the individual trains may be combined (as may the impinger catches), and one analysis of front-half catch and one analysis of impinger catch may be performed.

6.6.11 At the end of the sample run, turn off the coarse-adjust valve, remove the probe and nozzle from the stack, turn off the pump, record the final dry-gas meter reading, and conduct a post-test leak-check. Also, leak-check the pitot lines as described in EPA Method 2. The lines must pass this leak-check in order to validate the velocity-head data.

6.6.12 Calculate percent isokineticity (see Section 10.8) to determine whether the run was valid or another test run should be made.

7.0 SAMPLE RECOVERY

7.1 Preparation:

7.1.1 Proper cleanup procedure begins as soon as the probe is removed from the stack at the end of the sampling period. Allow the probe to cool. When the probe can be safely handled, wipe off all external particulate matter near the tip of the probe nozzle and place a cap over the tip to prevent losing or gaining particulate matter. Do not cap the probe tip tightly while the sampling train is cooling down because this will create a vacuum in the filter holder, drawing water from the impingers into the sorbent module.

7.1.2 Before moving the sample train to the cleanup site, remove the probe from the sample train and cap the open outlet, being careful not to lose any condensate that might be present. Cap the filter inlet.

Remove the umbilical cord from the last impinger and cap the impinger. If a flexible line is used between the organic module and the filter holder, disconnect the line at the filter holder and let any condensed water or liquid drain into the organic module.

7.1.3 Cap the filter-holder outlet and the inlet to the organic module. Separate the sorbent trap section of the organic module from the condensate knockout trap and the gas-conditioning section. Cap all organic module openings. Disconnect the organic-module knockout trap from the impinger train inlet and cap both of these openings. Ground-glass stoppers, Teflon caps, or caps of other inert materials may be used to seal all openings.

7.1.4 Transfer the probe, the filter, the organic-module components, and the impinger/condenser assembly to the cleanup area. This area should be clean and protected from the weather to minimize sample contamination or loss.

7.1.5 Save a portion of all washing solutions (methanol/methylene chloride, Type II water) used for cleanup as a blank. Transfer 200 mL of each solution directly from the wash bottle being used and place each in a separate, prelabeled glass sample container.

7.1.6 Inspect the train prior to and during disassembly and note any abnormal conditions.

7.2 Sample containers:

7.2.1 **Container no. 1:** Carefully remove the filter from the filter holder and place it in its identified Petri dish container. Use a pair or pairs of tweezers to handle the filter. If it is necessary to fold the filter, ensure that the particulate cake is inside the fold. Carefully transfer to the Petri dish any particulate matter or filter fibers that adhere to the filter-holder gasket, using a dry nylon bristle brush or sharp-edged blade, or both. Label the container and seal with 1-in.-wide Teflon tape around the circumference of the lid.

7.2.2 **Container no. 2:** Taking care that dust on the outside of the probe or other exterior surfaces does not get into the sample, quantitatively recover particulate matter or any condensate from the probe nozzle, probe fitting, probe liner, and front half of the filter holder by washing these components first with methanol/methylene chloride (1:1 v/v) into a glass container. Distilled water may also be used. Retain a water and solvent blank and analyze in the same manner as with the samples. Perform rinses as follows:

7.2.2.1 Carefully remove the probe nozzle and clean the inside surface by rinsing with the solvent mixture (1:1 v/v methanol/-methylene chloride) from a wash bottle and brushing with a nylon bristle brush. Brush until the rinse shows no visible particles; then make a final rinse of the inside surface with the solvent mix. Brush and rinse the inside parts of the Swagelok fitting with the solvent mix in a similar way until no visible particles remain.

7.2.2.2 Have two people rinse the probe liner with the solvent mix by tilting and rotating the probe while squirting solvent into its upper end so that all inside surfaces will be wetted with solvent. Let the solvent drain from the lower end into the sample container. A glass funnel may be used to aid in transferring liquid washes to the container.

7.2.2.3 Follow the solvent rinse with a probe brush. Hold the probe in an inclined position and squirt solvent into the upper end while pushing the probe brush through the probe with a twisting action; place a sample container underneath the lower end of the probe and catch any solvent and particulate matter that is brushed from the probe. Run the brush through the probe three times or more until no visible particulate matter is carried out with the solvent or until none remains in the probe liner on visual inspection. With stainless steel or other metal probes, run the brush through in the above-prescribed manner at least six times (metal probes have small crevices in which particulate matter can be entrapped). Rinse the brush with solvent and quantitatively collect these washings in the sample container. After the brushing, make a final solvent rinse of the probe as described above.

7.2.2.4 It is recommended that two people work together to clean the probe to minimize sample losses. Between sampling runs, keep brushes clean and protected from contamination.

7.2.2.5 Clean the inside of the front half of the filter holder and cyclone/cyclone flask, if used, by rubbing the surfaces with a nylon bristle brush and rinsing with methanol/methylene chloride (1:1 v/v) mixture. Rinse each surface three times or more if needed to remove visible particulate. Make a final rinse of the brush and filter holder. Carefully rinse out the glass cyclone and cyclone flask (if applicable). Brush and rinse any particulate material adhering to the inner surfaces of these components into the front-half rinse sample. After all solvent washings and particulate matter have been collected in the sample container, tighten the lid on the sample container so that solvent will not leak out when it is shipped to the laboratory. Mark the height of the fluid level to determine whether leakage occurs during transport. Label the container to identify its contents.

7.2.3 **Container no. 3:** The sorbent trap section of the organic module may be used as a sample transport container, or the spent resin may be transferred to a separate glass bottle for shipment. If the sorbent trap itself is used as the transport container, both ends should be sealed with tightly fitting caps or plugs. Ground-glass stoppers or Teflon caps may be used. The sorbent trap should then be labeled, covered with aluminum foil, and packaged on ice for transport to the laboratory. If a separate bottle is used, the spent resin should be quantitatively transferred from the trap into the clean bottle. Resin that adheres to the walls of the trap should be recovered using a rubber policeman or spatula and added to this bottle.

7.2.4 Container no. 4: Measure the volume of condensate collected in the condensate knockout section of the organic module to within ±1 mL by using a graduated cylinder or by weighing to within ±0.5 g using a triple-beam balance. Record the volume or weight of liquid present and note any discoloration or film in the liquid catch. Transfer this liquid to a prelabeled glass sample container. Inspect the back half of the filter housing and the gas-conditioning section of the organic module. If condensate is observed, transfer it to a graduated or weighing bottle and measure the volume, as described above. Add this material to the condensate knockout-trap catch.

7.2.5 Container no. 5: All sampling train components located between the high-efficiency glass- or quartz-fiber filter and the first wet impinger or the final condenser system (including the heated Teflon line connecting the filter outlet to the condenser) should be thoroughly rinsed with methanol/methylene chloride (1:1 v/v) and the rinsings combined. This rinse shall be separated from the condensate. If the spent resin is transferred from the sorbent trap to a separate sample container for transport, the sorbent trap shall be thoroughly rinsed until all sample-wetted surfaces appear clean. Visible films should be removed by brushing. Whenever train components are brushed, the brush should be subsequently rinsed with solvent mixture and the rinsings added to this container.

7.2.6 Container no. 6: Note the color of the indicating silica gel to determine if it has been completely spent and make a notation of its condition. Transfer the silica gel from the fourth impinger to its original container and seal. A funnel may make it easier to pour the silica gel without spilling. A rubber policeman may be used as an aid in removing the silica gel from the impinger. It is not necessary to remove the small amount of dust particles that may adhere strongly to the impinger wall. Because the gain in weight is to be used for moisture calculations, do not use any water or other liquids to transfer the silica gel. If a balance is available in the field, weigh the container and its contents to 0.5 g or better.

7.3 Impinger water:

7.3.1 Make a notation of any color or film in the liquid catch. Measure the liquid in the first three impingers to within ±1 mL by using a graduated cylinder or by weighing it to within ±0.5 g by using a balance (if one is available). Record the volume or weight of liquid present. This information is required to calculate the moisture content of the effluent gas.

7.3.2 Discard the liquid after measuring and recording the volume or weight, unless analysis of the impinger catch is required (see Paragraph 4.1.3.7). Amber glass containers should be used for storage of impinger catch, if required.

7.3.3 If a different type of condenser is used, measure the amount of moisture condensed either volumetrically or gravimetrically.

7.4 Sample preparation for shipment: Prior to shipment, recheck all sample containers to ensure that the caps are well secured. Seal the lids of all containers around the circumference with Teflon tape. Ship all liquid samples upright on ice and all particulate filters with the particulate catch facing upward. The particulate filters should be shipped unrefrigerated.

8.0 ANALYSIS

8.1 Sample preparation:

8.1.1 **General:** The preparation steps for all samples will result in a finite volume of concentrated solvent. The final sample volume (usually in the 1- to 10-mL range) is then subjected to analysis by GC/MS. All samples should be inspected and the appearance documented. All samples are to be spiked with surrogate standards as received from the field prior to any sample manipulations. The spike should be at a level equivalent to 10 times the MDL when the solvent is reduced in volume to the desired level (i.e., 10 mL). The spiking compounds should be the stable isotopically labeled analog of the compounds of interest or a compound that would exhibit properties similar to the compounds of interest, be easily chromatographed, and not interfere with the analysis of the compounds of interest. Suggested surrogate spiking compounds are: deuterated naphthalene, chrysene, phenol, nitrobenzene, chlorobenzene, toluene, and carbon-13-labeled pentachlorophenol.

8.1.2 **Condensate:** The "condensate" is the moisture collected in the first impinger following the XAD-2 module. Spike the condensate with the surrogate standards. The volume is measured and recorded and then transferred to a separatory funnel. The pH is to be adjusted to pH 2 with 6 N sulfuric acid, if necessary. The sample container and graduated cylinder are sequentially rinsed with three successive 10-mL aliquots of the extraction solvent and added to the separatory funnel. The ratio of solvent to aqueous sample should be maintained at 1:3. Extract the sample by vigorously shaking the separatory funnel for 5 min. After complete separation of the phases, remove the solvent and transfer to a Kuderna-Danish concentrator (K-D), filtering through a bed of precleaned, dry sodium sulfate. Repeat the extraction step two additional times. Adjust the pH to 11 with 6 N sodium hydroxide and reextract combining the acid and base extracts. Rinse the sodium sulfate into the K-D with fresh solvent and discard the desiccant. Add Teflon boiling chips and concentrate to 10 mL by reducing the volume to slightly less than 10 mL and then bringing to volume with fresh solvent. In order to achieve the necessary detection limit, the sample volume can be further reduced to 1 mL by using a micro column K-D or nitrogen blow-down. Should the sample start to exhibit precipitation, the concentration step should be stopped and the sample redissolved with fresh solvent taking the volume to some finite amount. After adding a standard (for the purpose of quantitation by GC/MS), the sample is ready for analysis, as discussed in Paragraph 8.2.

8.1.3 **Impinger:** Spike the sample with the surrogate standards; measure and record the volume and transfer to a separatory funnel. Proceed as described in Paragraph 8.1.2.

8.1.4 **XAD-2:** Spike the resin directly with the surrogate standards. Transfer the resin to the all-glass thimbles by the following procedure (care should be taken so as not to contaminate the thimble by touching it with anything other than tweezers or other solvent-rinsed mechanical holding devices). Suspend the XAD-2 module directly over the thimble. The glass frit of the module (see Figure 2) should be in the up position. The thimble is contained in a clean beaker, which will serve to catch the solvent rinses. Using a Teflon squeeze bottle, flush the XAD-2 into the thimble. Thoroughly rinse the glass module with solvent into the beaker containing the thimble. Add the XAD-2 glass-wool plug to the thimble. Cover the XAD-2 in the thimble with a precleaned glass-wool plug sufficient to prevent the resin from floating into the solvent reservoir of the extractor. If the resin is wet, effective extraction can be accomplished by loosely packing the resin in the thimble. If a question arises concerning the completeness of the extraction, a second extraction, without a spike, is advised. The thimble is placed in the extractor and the rinse solvent contained in the beaker is added to the solvent reservoir. Additional solvent is added to make the reservoir approximately two-thirds full. Add Teflon boiling chips and assemble the apparatus. Adjust the heat source to cause the extractor to cycle 5-6 times per hr. Extract the resin for 16 hr. Transfer the solvent and three 10-mL rinses of the reservoir to a K-D and concentrate as described in Paragraph 8.1.2.

8.1.5 **Particulate filter (and cyclone catch):** If particulate loading is to be determined, weigh the filter (and cyclone catch, if applicable). The particulate filter (and cyclone catch, if applicable) is transferred to the glass thimble and extracted simultaneously with the XAD-2 resin.

8.1.6 **Train solvent rinses:** All train rinses (i.e., probe, impinger, filter housing) using the extraction solvent and methanol are returned to the laboratory as a single sample. If the rinses are contained in more than one container, the intended spike is divided equally among the containers proportioned from a single syringe volume. Transfer the rinse to a separatory funnel and add a sufficient amount of organic-free water so that the methylene chloride becomes immiscible and its volume no longer increases with the addition of more water. The extraction and concentration steps are then performed as described in Paragraph 8.1.2.

8.2 Sample analysis:

8.2.1 The primary analytical tool for the measurement of emissions from hazardous waste incinerators is GC/MS using fused-silica capillary GC columns, as described in Method 8270 in Chapter Four of this manual. Because of the nature of GC/MS instrumentation and the cost associated with sample analysis, prescreening of the sample extracts by gas chromatography/flame ionization detection (GC/FID) or with electron capture (GC/ECD) is encouraged. Information regarding the complexity and concentration level of a sample prior to GC/MS analysis can be of enormous help. This information can be obtained by using either capillary columns or less expensive packed columns. However, the FID screen should be performed with a column similar to that used with the GC/MS. Keep in mind that GC/FID has a slightly lower detection limit than GC/MS and, therefore, that the concentration of the sample can be adjusted either up or down prior to analysis by GC/MS.

8.2.2 The mass spectrometer will be operated in a full scan (40-450) mode for most of the analyses. The range for which data are acquired in a GC/MS run will be sufficiently broad to encompass the major ions, as listed in Chapter Four, Method 8270, for each of the designated POHCs in an incinerator effluent analysis.

8.2.3 For most purposes, electron ionization (EI) spectra will be collected because a majority of the POHCs give reasonable EI spectra. Also, EI spectra are compatible with the NBS Library of Mass Spectra and other mass spectral references, which aid in the identification process for other components in the incinerator process streams.

8.2.4 To clarify some identifications, chemical ionization (CI) spectra using either positive ions or negative ions will be used to elucidate molecular-weight information and simplify the fragmentation patterns of some compounds. In no case, however, should CI spectra alone be used for compound identification. Refer to Chapter Four, Method 8270, for complete descriptions of GC conditions, MS conditions, and quantitative and quantitative identification.

9.0 CALIBRATION

9.1 Probe nozzle: Probe nozzles shall be calibrated before their initial use in the field. Using a micrometer, measure the inside diameter of the nozzle to the nearest 0.025 mm (0.001 in.). Make measurements at three separate places across the diameter and obtain the average of the measurements. The difference between the high and low numbers shall not exceed 0.1 mm (0.004 in.). When nozzles become nicked, dented, or corroded, they shall be reshaped, sharpened, and recalibrated before use. Each nozzle shall be permanently and uniquely identified.

9.2 Pitot tube: The Type S pitot tube assembly shall be calibrated according to the procedure outlined in Section 4 of EPA Method 2, or assigned a nominal coefficient of 0.84 if it is not visibly nicked, dented, or corroded and if it meets design and intercomponent spacing specifications.

9.3 Metering system:

9.3.1 Before its initial use in the field, the metering system shall be calibrated according to the procedure outlined in APTD-0576. Instead of physically adjusting the dry-gas meter dial readings to correspond to the wet-test meter readings, calibration factors may be used to correct the gas meter dial readings mathematically to the proper values. Before calibrating the metering system, it is suggested that a leak-check be conducted. For metering systems having diaphragm pumps, the normal leak-check procedure will not detect leakages within the pump. For these cases the following leak-check procedure is suggested: Make a 10-min calibration run at 0.00057 m^3/min (0.02 cfm); at the end of the run, take the difference of the measured wet-test and dry-gas meter volumes and divide the difference by 10 to get the leak rate. The leak rate should not exceed 0.00057 m^3/min (0.02 cfm).

9.3.2 After each field use, the calibration of the metering system shall be checked by performing three calibration runs at a single intermediate orifice setting (based on the previous field test). The vacuum shall be set at the maximum value reached during the test series. To adjust the vacuum, insert a valve between the wet-test meter and the inlet of the metering system. Calculate the average value of the calibration factor. If the calibration has changed by more than 5%, recalibrate the meter over the full range of orifice settings, as outlined in APTD-0576.

9.3.3 **Leak-check of metering system:** That portion of the sampling train from the pump to the orifice meter (see Figure 1) should be leak-checked prior to initial use and after each shipment. Leakage after the pump will result in less volume being recorded than is actually sampled. The following procedure is suggested (see Figure 6): Close the main valve on the meter box. Insert a one-hole rubber stopper with rubber tubing attached into the orifice exhaust pipe. Disconnect and vent the low side of the orifice manometer. Close off the low side orifice tap. Pressurize the system to 13-18 cm (5-7 in.) water column by blowing into the rubber tubing. Pinch off the tubing and observe the manometer for 1 min. A loss of pressure on the manometer indicates a leak in the meter box. Leaks, if present, must be corrected.

NOTE: If the dry-gas-meter coefficient values obtained before and after a test series differ by >5%, either the test series shall be voided or calculations for test series shall be performed using whichever meter coefficient value (i.e., before or after) gives the lower value of total sample volume.

9.4 Probe heater: The probe-heating system shall be calibrated before its initial use in the field according to the procedure outlined in APTD-0576. Probes constructed according to APTD-0581 need not be calibrated if the calibration curves in APTD-0576 are used.

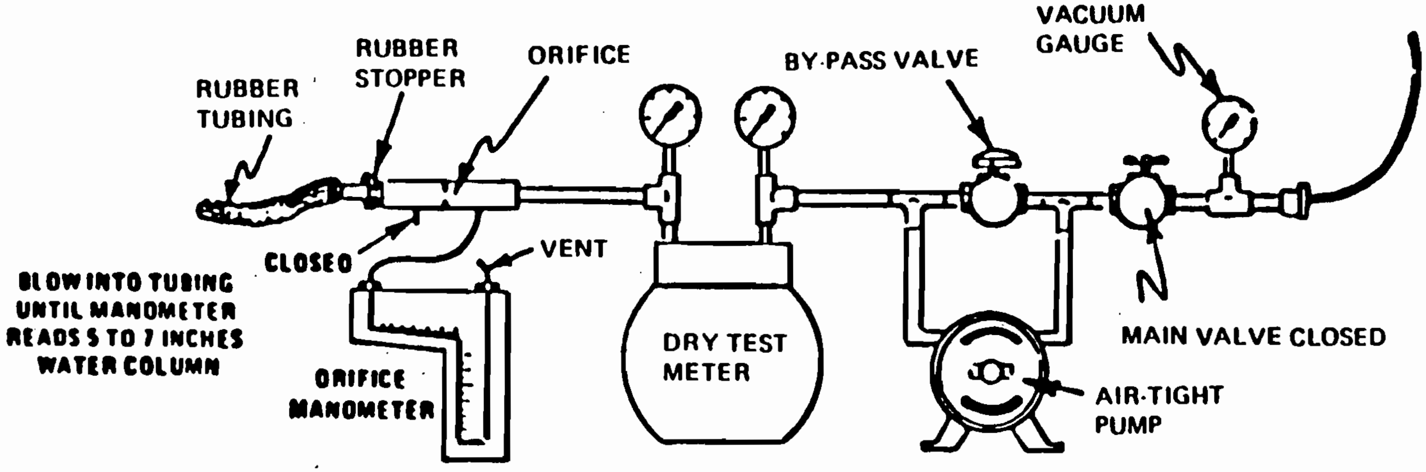

Figure 6. Leak-check of meter box.

9.5 Temperature gauges: Each thermocouple must be permanently and uniquely marked on the casting; all mercury-in-glass reference thermometers must conform to ASTM E-1 63C or 63F specifications. Thermocouples should be calibrated in the laboratory with and without the use of extension leads. If extension leads are used in the field, the thermocouple readings at ambient air temperatures, with and without the extension lead, must be noted and recorded. Correction is necessary if the use of an extension lead produces a change >1.5%.

9.5.1 **Impinger, organic module, and dry-gas meter thermocouples:** For the thermocouples used to measure the temperature of the gas leaving the impinger train and the XAD-2 resin bed, three-point calibration at ice-water, room-air, and boiling-water temperatures is necessary. Accept the thermocouples only if the readings at all three temperatures agree to ±2°C (3.6°F) with those of the absolute value of the reference thermometer.

9.5.2 **Probe and stack thermocouple:** For the thermocouples used to indicate the probe and stack temperatures, a three-point calibration at ice-water, boiling-water, and hot-oil-bath temperatures must be performed; it is recommended that room-air temperature be added, and that the thermometer and the thermocouple agree to within 1.5% at each of the calibration points. A calibration curve (equation) may be constructed (calculated) and the data extrapolated to cover the entire temperature range suggested by the manufacturer.

9.6 Barometer: Adjust the barometer initially and before each test series to agree to within ±25 mm Hg (0.1 in. Hg) of the mercury barometer or the corrected barometric pressure value reported by a nearby National Weather Service Station (same altitude above sea level).

9.7 Triple-beam balance: Calibrate the triple-beam balance before each test series, using Class-S standard weights; the weights must be within ±0.5% of the standards, or the balance must be adjusted to meet these limits.

10.0 CALCULATIONS

10.1 Carry out calculations. Round off figures after the final calculation to the correct number of significant figures.

10.2 Nomenclature:

A_n = Cross-sectional area of nozzle, m^2 (ft^2).

B_{ws} = Water vapor in the gas stream, proportion by volume.

C_d = Type S pitot tube coefficient (nominally 0.84 ± 0.02), dimensionless.

I = Percent of isokinetic sampling.

L_a = Maximum acceptable leakage rate for a leak-check, either pre-test or following a component change; equal to 0.00057 m^3/min (0.02 cfm) or 4% of the average sampling rate, whichever is less.

L_i = Individual leakage rate observed during the leak-check conducted prior to the "i^{th}" component change (i = 1, 2, 3...n) m^3/min (cfm).

L_p = Leakage rate observed during the post-test leak-check, m^3/min (cfm).

M_d = Stack-gas dry molecular weight, g/g-mole (lb/lb-mole).

M_w = Molecular weight of water, 18.0 g/g-mole (18.0 lb/lb-mole).

P_{bar} = Barometric pressure at the sampling site, mm Hg (in. Hg).

P_s = Absolute stack-gas pressure, mm Hg (in. Hg).

P_{std} = Standard absolute pressure, 760 mm Hg (29.92 in. Hg).

R = Ideal gas constant, 0.06236 mm Hg-m^3/K-g-mole (21.85 in. Hg-ft^3/°R-lb-mole).

T_m = Absolute average dry-gas meter temperature (see Figure 6), K (°R).

T_s = Absolute average stack-gas temperature (see Figure 6), K (°R).

T_{std} = Standard absolute temperature, 293K (528°R).

V_{lc} = Total volume of liquid collected in the organic module condensate knockout trap, the impingers, and silica gel, mL.

V_m = Volume of gas sample as measured by dry-gas meter, dscm (dscf).

$V_{m(std)}$ = Volume of gas sample measured by the dry-gas meter, corrected to standard conditions, dscm (dscf).

$V_{w(std)}$ = Volume of water vapor in the gas sample, corrected to standard conditions, scm (scf).

V_s = Stack-gas velocity, calculated by Method 2, Equation 2-9, using data obtained from Method 5, m/sec (ft/sec).

W_a = Weight of residue in acetone wash, mg.

γ = Dry-gas-meter calibration factor, dimensionless.

ΔH = Average pressure differential across the orifice meter (see Figure 2), mm H_2O (in. H_2O).

ρ_w = Density of water, 0.9982 g/mL (0.002201 lb/mL).

θ = Total sampling time, min.

θ_1 = Sampling time interval from the beginning of a run until the first component change, min.

θ_i = Sampling time interval between two successive component changes, beginning with the interval between the first and second changes, min.

θ_p = Sampling time interval from the final (nth) component change until the end of the sampling run, min.

13.6 = Specific gravity of mercury.

60 = sec/min.

100 = Conversion to percent.

10.3 Average dry-gas-meter temperature and average orifice pressure drop: See data sheet (Figure 5, above).

10.4 Dry-gas volume: Correct the sample measured by the dry-gas meter to standard conditions (20°C, 760 mm Hg [68°F, 29.92 in. Hg]) by using Equation 1:

$$V_{m(std)} = V_m\gamma \frac{T_{std}}{T_m} \frac{P_{bar} + \Delta H/13.6}{P_{std}} = K_1 V_m \gamma \frac{P_{bar} + \Delta H/13.6}{T_m} \qquad (1)$$

where:

K_1 = 0.3858 K/mm Hg for metric units, or
K_1 = 17.64°R/in. Hg for English units.

It should be noted that Equation 1 can be used as written, unless the leakage rate observed during any of the mandatory leak-checks (i.e., the post-test leak-check or leak-checks conducted prior to component changes) exceeds L_a. If L_p or L_i exceeds L_a, Equation 1 must be modified as follows:

a. Case I (no component changes made during sampling run): Replace V_m in Equation 1 with the expression:

$$V_m - (L_p - L_a)$$

b. Case II (one or more component changes made during the sampling run): Replace V_m in Equation 1 by the expression:

$$V_m - (L_1 - L_a)\theta_1 - \sum_{i=2}^{n} (L_i - L_a)\theta_1 - (L_p - L_a)\theta_p$$

and substitute only for those leakage rates (L_1 or L_p) that exceed L_a.

10.5 Volume of water vapor:

$$V_{w(std)} = V_{1c} \frac{P_w}{M_w} \frac{RT_{std}}{P_{std}} = K_2 V_{1c} \qquad (2)$$

where:

K_2 = 0.001333 m^3/mL for metric units, or
K_2 = 0.04707 ft^3/mL for English units.

10.6 Moisture content:

$$B_{ws} = \frac{V_{w(std)}}{V_{m(std)} + V_{w(std)}} \qquad (3)$$

NOTE: In saturated or water-droplet-laden gas streams, two calculations of the moisture content of the stack gas shall be made, one from the impinger analysis (Equation 3) and a second from the assumption of saturated conditions. The lower of the two values of B_w shall be considered correct. The procedure for determining the moisture content based upon assumption of saturated conditions is given in the Note to Section 1.2 of Method 4. For the purposes of this method, the average stack-gas temperature from Figure 6 may be used to make this determination, provided that the accuracy of the in-stack temperature sensor is ±1°C (2°F).

10.7 Conversion factors:

From	To	Multiply by
scf	m^3	0.02832
g/ft^3	gr/ft^3	15.43
g/ft^3	lb/ft^3	2.205×10^{-3}
g/ft^3	g/m^3	35.31

10.8 Isokinetic variation:

10.8.1 Calculation from raw data:

$$I = \frac{100\ T_s[K_3 F_{1c} + (V_m/T_m)\ (P_{bar} + \Delta H/13.6)]}{60\theta V_s P_s A_n} \qquad (4)$$

where:

K_3 = 0.003454 mm Hg-m^3/mL-K for metric units, or
K_3 = 0.002669 in. Hg-ft^3/mL-°R for English units.

10.8.2 Calculation for intermediate values:

$$I = \frac{T_s V_{m(std)} P_{std} 100}{T_{std} V_s \theta A_n P_s 60(1-B_{ws})} \qquad (5)$$

$$= K_4 \frac{T_s V_{m(std)}}{P_s V_s A_n \theta (1-B_{ws})}$$

where:

K_4 = 4.320 for metric units, or
K_4 = 0.09450 for English units.

10.8.3 **Acceptable results:** If $90\% \leq I \leq 110\%$, the results are acceptable. If the results are low in comparison with the standard and I is beyond the acceptable range, or if I is less than 90%, the Administrator may opt to accept the results.

10.9 To determine the minimum sample volume that shall be collected, the following sequence of calculations shall be used.

10.9.1 From prior analysis of the waste feed, the concentration of POHCs introduced into the combustion system can be calculated. The degree of destruction and removal efficiency that is required is used to determine the maximum amount of POHC allowed to be present in the effluent. This may be expressed as:

$$\frac{(WF)\ (POHC_i\ conc)}{100}\ \frac{(100-\%DRE)}{100} = \text{Max } POHC_i \text{ Mass} \qquad (6)$$

where:

WF = mass flow rate of waste feed per hr, g/hr (lb/hr).

$POHC_i$ = concentration of Principal Organic Hazardous Compound (wt %) introduced into the combustion process.

DRE = percent Destruction and Removal Efficiency required.

Max POHC = mass flow rate (g/hr [lb/hr]) of POHC emitted from the combustion source.

10.9.2 The average discharge concentration of the POHC in the effluent gas is determined by comparing the Max POHC with the volumetric flow rate being exhausted from the source. Volumetric flow rate data are available as a result of preliminary Method 1-4 determinations:

$$\frac{\text{Max POHC}_i \text{ Mass}}{DV_{eff(std)}} = \text{Max POHC}_i \text{ conc} \qquad (7)$$

where:

$DV_{eff(std)}$ = volumetric flow rate of exhaust gas, dscm (dscf).

$POHC_i$ conc = anticipated concentration of the POHC in the exhaust gas stream, g/dscm (lb/dscf).

10.9.3 In making this calculation, it is recommended that a safety margin of at least ten be included:

$$\frac{LDL_{POHC} \times 10}{POHC_{i\ conc}} = V_{TBC} \qquad (8)$$

where:

LDL_{POHC} = detectable amount of POHC in entire sampling train.
NOTE: The whole extract from an XAD-2 cartridge is seldom if ever, injected at once. Therefore, if aliquoting factors are involved, the LDL_{POHC} is not the same as the analytical (or column) detection limit.

V_{TBC} = minimum dry standard volume to be collected at dry-gas meter.

10.10 <u>Concentration of any given POHC in the gaseous emissions of a combustion process</u>:

1) Multiply the concentration of the POHC as determined in Method 8270 by the final concentration volume, typically 10 mL.

C_{POHC} (ug/mL) x sample volume (mL) = amount (ug) of POHC in sample (9)

where:

C_{POHC} = concentration of POHC as analyzed by Method 8270.

2) Sum the amount of POHC found in all samples associated with a single train.

Total (ug) = XAD-2 (ug) + condensate (ug) + rinses (ug) + impinger (ug) (10)

3) Divide the total ug found by the volume of stack gas sampled (m^3).

(Total ug)/(train sample volume) = concentration of POHC (ug/m^3) (11)

11.0 QUALITY CONTROL

11.1 Sampling: See EPA Manual 600/4-77-027b for Method 5 quality control.

11.2 Analysis: The quality assurance program required for this study includes the analysis of field and method blanks, procedure validations, incorporation of stable labeled surrogate compounds, quantitation versus stable labeled internal standards, capillary column performance checks, and external performance tests. The surrogate spiking compounds selected for a particular analysis are used as primary indicators of the quality of the analytical data for a wide range of compounds and a variety of sample matrices. The assessment of combustion data, positive identification, and quantitation of the selected compounds are dependent on the integrity of the samples received and the precision and accuracy of the analytical methods employed. The quality assurance procedures for this method are designed to monitor the performance of the analytical method and to provide the required information to take corrective action if problems are observed in laboratory operations or in field sampling activities.

11.2.1 **Field Blanks:** Field blanks must be submitted with the samples collected at each sampling site. The field blanks include the sample bottles containing aliquots of sample recovery solvents, unused filters, and resin cartridges. At a minimum, one complete sampling train will be assembled in the field staging area, taken to the sampling area, and leak-checked at the beginning and end of the testing (or for the same total number of times as the actual test train). The filter housing and probe of the blank train will be heated during the sample test. The train will be recovered as if it were an actual test sample. No gaseous sample will be passed through the sampling train.

11.2.2 **Method blanks:** A method blank must be prepared for each set of analytical operations, to evaluate contamination and artifacts that can be derived from glassware, reagents, and sample handling in the laboratory.

11.2.3 Refer to Method 8270 for additional quality control considerations.

12.0 METHOD PERFORMANCE

12.1 Method performance evaluation: Evaluation of analytical procedures for a selected series of compounds must include the sample-preparation procedures and each associated analytical determination. The analytical procedures should be challenged by the test compounds spiked at appropriate levels and carried through the procedures.

12.2 Method detection limit: The overall method detection limits (lower and upper) must be determined on a compound-by-compound basis because different compounds may exhibit different collection, retention, and extraction efficiencies as well as instrumental minimum detection limit (MDL). The method detection limit must be quoted relative to a given sample volume. The upper limits for the method must be determined relative to compound retention volumes (breakthrough).

12.3 Method precision and bias: The overall method precision and bias must be determined on a compound-by-compound basis at a given concentration level. The method precision value would include a combined variability due to sampling, sample preparation, and instrumental analysis. The method bias would be dependent upon the collection, retention, and extraction efficiency of the train components. From evaluation studies to date using a dynamic spiking system, method biases of -13% and -16% have been determined for toluene and 1,1,2,2-tetrachloroethane, respectively. A precision of 19.9% was calculated from a field test data set representing seven degrees of freedom which resulted from a series of paired, unspiked Semivolatile Organic Sampling trains (Semi-VOST) sampling emissions from a hazardous waste incinerator.

13.0 REFERENCES

1. Addendum to Specifications for Incinerator Testing at Federal Facilities, PHS, NCAPC, December 6, 1967.

2. Bursey, J., Homolya, J., McAllister, R., and McGangley, J., Laboratory and Field Evaluation of the Semi-VOST Method, Vols. 1 and 2, U.S. Environmental Protection Agency, EPA/600/4-851/075A, 075B (1985).

3. Martin, R.M., Construction Details of Isokinetic Source-Sampling Equipment, Research Triangle Park, NC, U.S. Environmental Protection Agency, April 1971, PB-203 060/BE, APTD-0581, 35 pp.

4. Rom, J.J., Maintenance, Calibration, and Operation of Isokinetic Source-Sampling Equipment, Research Triangle Park, NC, U.S. Environmental Protection Agency, March 1972, PB-209 022/BE, APTD-0576, 39 pp.

5. Schlickenrieder, L.M., Adams, J.W., and Thrun, K.E., Modified Method 5 Train and Source Assessment Sampling System: Operator's Manual, U.S. Environmental Protection Agency, EPA/600/8-85/003, (1985).

6. Shigehara, R.T., Adjustments in the EPA Nomography for Different Pitot Tube Coefficients and Dry Molecular Weights, Stack Sampling News, 2:4-11 (October 1974).

7. U.S. Environmental Protection Agency, CFR 40 Part 60, Appendix A, Methods 1-5.

8. Vollaro, R.F., A Survey of Commercially Available Instrumentation for the Measurement of Low-Range Gas Velocities, Research Triangle Park, NC, U.S. Environmental Protection Agency, Emissions Measurement Branch, November 1976 (unpublished paper).

METHOD 0010, APPENDIX A

PREPARATION OF XAD-2 SORBENT RESIN

1.0 SCOPE AND APPLICATION

1.1 XAD-2 resin as supplied by the manufacturer is impregnated with a bicarbonate solution to inhibit microbial growth during storage. Both the salt solution and any residual extractable monomer and polymer species must be removed before use. The resin is prepared by a series of water and organic extractions, followed by careful drying.

2.0 EXTRACTION

2.1 Method 1: The procedure may be carried out in a giant Soxhlet extractor. An all-glass thimble containing an extra-coarse frit is used for extraction of XAD-2. The frit is recessed 10-15 mm above a crenellated ring at the bottom of the thimble to facilitate drainage. The resin must be carefully retained in the extractor cup with a glass-wool plug and stainless steel screen because it floats on methylene chloride. This process involves sequential extraction in the following order.

Solvent	Procedure
Water	Initial rinse: Place resin in a beaker, rinse once with Type II water, and discard. Fill with water a second time, let stand overnight, and discard.
Water	Extract with H_2O for 8 hr.
Methyl alcohol	Extract for 22 hr.
Methylene chloride	Extract for 22 hr.
Methylene chloride (fresh)	Extract for 22 hr.

2.2 Method 2:

2.2.1 As an alternative to Soxhlet extraction, a continuous extractor has been fabricated for the extraction sequence. This extractor has been found to be acceptable. The particular canister used for the apparatus shown in Figure A-1 contains about 500 g of finished XAD-2. Any size may be constructed; the choice is dependent on the needs of the sampling programs. The XAD-2 is held under light spring tension between a pair of coarse and fine screens. Spacers under the bottom screen allow for even distribution of clean solvent. The three-necked flask should be of sufficient size (3-liter in this case) to hold solvent

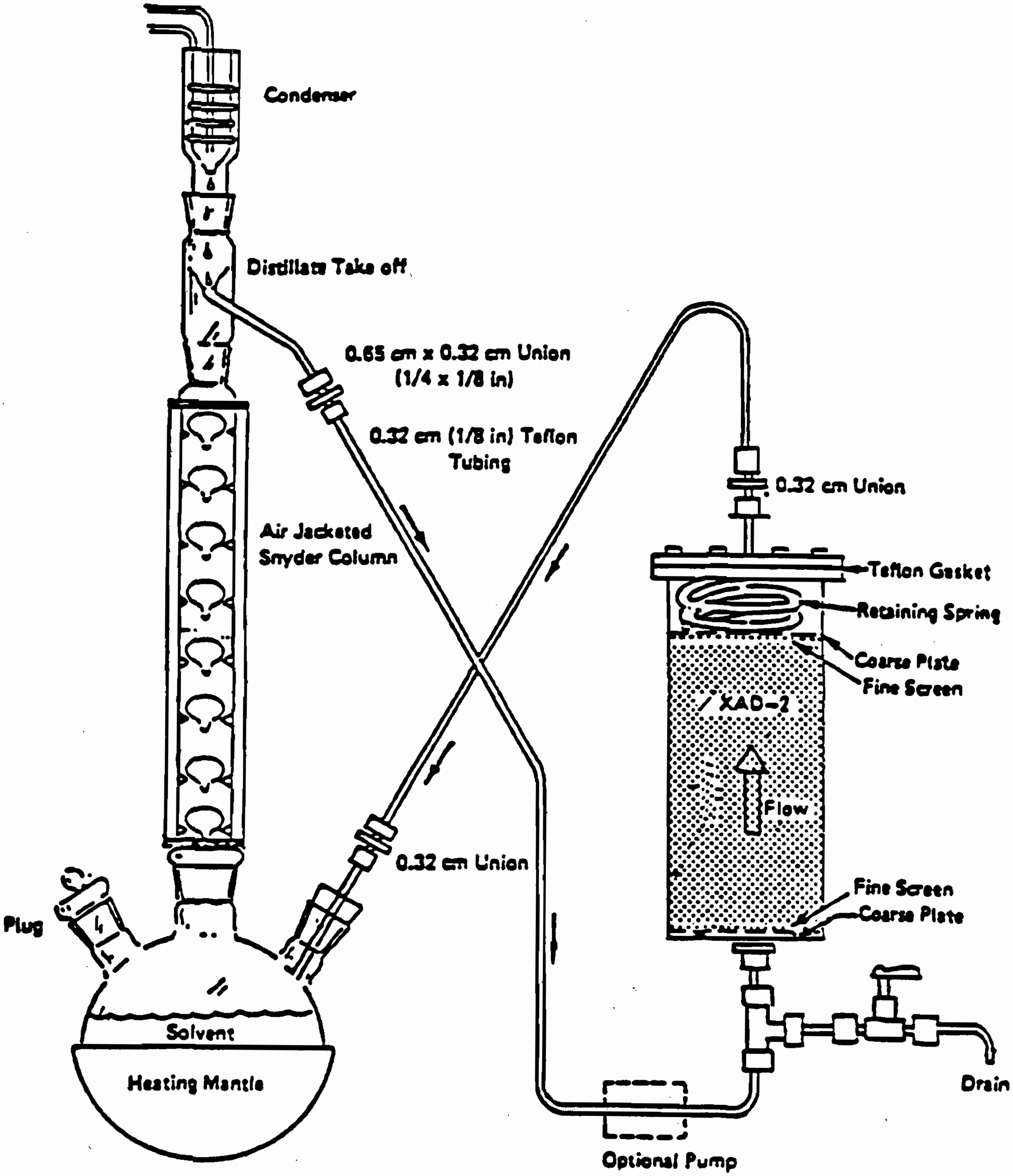

Figure A-1. XAD-2 cleanup extraction apparatus.

equal to twice the dead volume of the XAD-2 canister. Solvent is refluxed through the Snyder column, and the distillate is continuously cycled up through the XAD-2 for extraction and returned to the flask. The flow is maintained upward through the XAD-2 to allow maximum solvent contact and prevent channeling. A valve at the bottom of the canister allows removal of solvent from the canister between changes.

2.2.2 Experience has shown that it is very difficult to cycle sufficient water in this mode. Therefore the aqueous rinse is accomplished by simply flushing the canister with about 20 liters of distilled water. A small pump may be useful for pumping the water through the canister. The water extraction should be carried out at the rate of about 20-40 mL/min.

2.2.3 After draining the water, subsequent methyl alcohol and methylene chloride extractions are carried out using the refluxing apparatus. An overnight or 10- to 20-hr period is normally sufficient for each extraction.

2.2.4 All materials of construction are glass, Teflon, or stainless steel. Pumps, if used, should not contain extractable materials. Pumps are not used with methanol and methylene chloride.

3.0 DRYING

3.1 After evaluation of several methods of removing residual solvent, a fluidized-bed technique has proved to be the fastest and most reliable drying method.

3.2 A simple column with suitable retainers, as shown in Figure A-2, will serve as a satisfactory column. A 10.2-cm (4-in.) Pyrex pipe 0.6 m (2 ft) long will hold all of the XAD-2 from the extractor shown in Figure A-1 or the Soxhlet extractor, with sufficient space for fluidizing the bed while generating a minimum resin load at the exit of the column.

3.3 Method 1: The gas used to remove the solvent is the key to preserving the cleanliness of the XAD-2. Liquid nitrogen from a standard commercial liquid nitrogen cylinder has routinely proved to be a reliable source of large volumes of gas free from organic contaminants. The liquid nitrogen cylinder is connected to the column by a length of precleaned 0.95-cm (3/8-in.) copper tubing, coiled to pass through a heat source. As nitrogen is bled from the cylinder, it is vaporized in the heat source and passes through the column. A convenient heat source is a water bath heated from a steam line. The final nitrogen temperature should only be warm to the touch and not over 40°C. Experience has shown that about 500 g of XAD-2 may be dried overnight by consuming a full 160-liter cylinder of liquid nitrogen.

3.4 Method 2: As a second choice, high-purity tank nitrogen may be used to dry the XAD-2. The high-purity nitrogen must first be passed through a bed

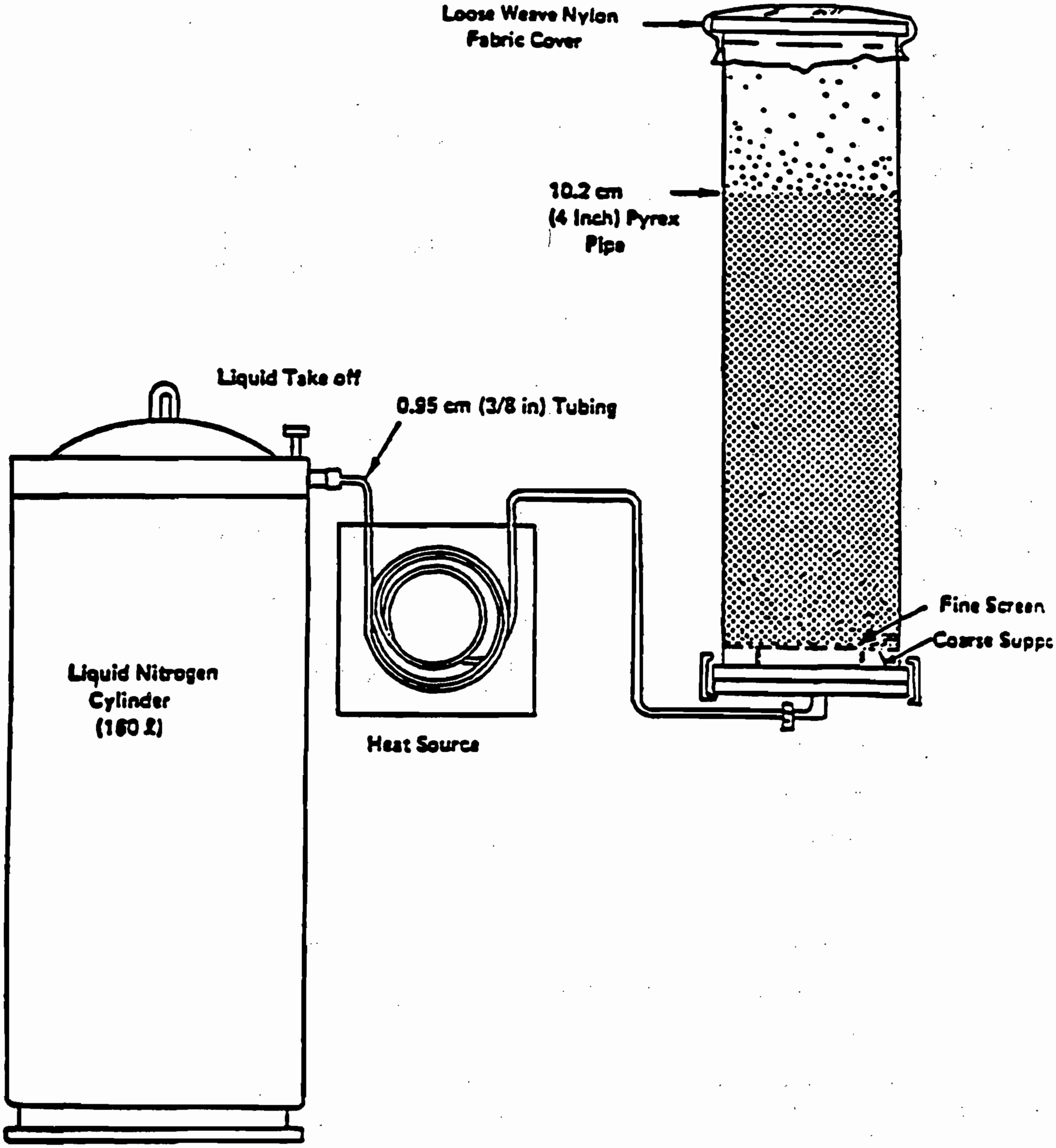

Figure A-2. XAD-2 fluidized-bed drying apparatus.

of activated charcoal approximately 150 mL in volume. With either type of drying method, the rate of flow should gently agitate the bed. Excessive fluidization may cause the particles to break up.

4.0 QUALITY CONTROL PROCEDURES

4.1 For both Methods 1 and 2, the quality control results must be reported for the batch. The batch must be reextracted if the residual extractable organics are >20 ug/mL by TCO analysis or the gravimetric residue is >0.5 mg/20 g XAD-2 extracted. (See also section 5.1, Method 0010.)

4.2 Four control procedures are used with the final XAD-2 to check for (1) residual methylene chloride, (2) extractable organics (TCO), (3) specific compounds of interest as determined by GC/MS, as described in Section 4.5 below, and (4) residue (GRAV).

4.3 Procedure for residual methylene chloride:

4.3.1 **Description:** A 1±0.1-g sample of dried resin is weighed into a small vial, 3 mL of toluene are added, and the vial is capped and well shaken. Five uL of toluene (now containing extracted methylene chloride) are injected into a gas chromatograph, and the resulting integrated area is compared with a reference standard. The reference solution consists of 2.5 uL of methylene chloride in 100 mL of toluene, simulating 100 ug of residual methylene chloride on the resin. The acceptable maximum content is 1,000 ug/g resin.

4.3.2 **Experimental:** The gas chromatograph conditions are as follows:

6-ft x 1/8-in. stainless steel column containing 10% OV-101 on 100/120 Supelcoport;

Helium carrier at 30 mL/min;

FID operated on 4 x 10^{-11} A/mV;

Injection port temperature: 250°C;

Detector temperature: 305°C;

Program: 30°C(4 min) 40°C/min 250°C (hold); and

Program terminated at 1,000 sec.

4.4 Procedure for residual extractable organics:

4.4.1 **Description:** A 20±0.1-g sample of cleaned, dried resin is weighed into a precleaned alundum or cellulose thimble which is plugged with cleaned glass wool. (Note that 20 g of resin will fill a thimble, and the resin will float out unless well plugged.) The thimble containing the resin is extracted for 24 hr with 200-mL of pesticide- grade methylene chloride (Burdick and Jackson pesticide-grade or equivalent purity). The 200-mL extract is reduced in volume to 10-mL using a Kuderna-Danish concentrator and/or a nitrogen evaporation stream. Five uL of that solution are analyzed by gas chromatography using the TCO analysis procedure. The concentrated solution should not contain >20 ug/mL of TCO extracted from the XAD-2. This is equivalent to 10 ug/g of TCO in the XAD-2 and would correspond to 1.3 mg of TCO in the extract of the 130-g XAD-2 module. Care should be taken to correct the TCO data for a solvent blank prepared (200 mL reduced to 10 mL) in a similar manner.

4.4.2 **Experimental:** Use the TCO analysis conditions described in the revised Level 1 manual (EPA 600/7-78-201).

4.5 GC/MS Screen: The extract, as prepared in paragraph 4.4.1, is subjected to GC/MS analysis for each of the individual compounds of interest. The GC/MS procedure is described in Chapter Four, Method 8270. The extract is screened at the MDL of each compound. The presence of any compound at a concentration >25 ug/mL in the concentrated extract will require the XAD-2 to be recleaned by repeating the methylene chloride step.

4.6 Methodology for residual gravimetric determination: After the TCO value and GC/MS data are obtained for the resin batch by the above procedures, dry the remainder of the extract in a tared vessel. There must be <0.5 mg residue registered or the batch of resin will have to be extracted with fresh methylene chloride again until it meets this criterion. This level corresponds to 25 ug/g in the XAD-2, or about 3.25 mg in a resin charge of 130 g.

METHOD 0010, APPENDIX B

TOTAL CHROMATOGRAPHABLE ORGANIC MATERIAL ANALYSIS

1.0 SCOPE AND APPLICATION

1.1 In this procedure, gas chromatography is used to determine the quantity of lower boiling hydrocarbons (boiling points between 90° and 300°C) in the concentrates of all organic solvent rinses, XAD-2 resin and LC fractions - when Method 1 is used (see References, Method 0010) - encountered in Level 1 environmental sample analyses. Data obtained using this procedure serve a twofold purpose. First, the total quantity of the lower boiling hydrocarbons in the sample is determined. Then whenever the hydrocarbon concentrations in the original concentrates exceed 75 ug/m^3, the chromatography results are reexamined to determine the amounts of individual species.

The extent of compound identification is limited to representing all materials as normal alkanes based upon comparison of boiling points. Thus the method is not qualitative. In a similar manner, the analysis is semiquantitative; calibrations are prepared using only one hydrocarbon. They are replicated but samples routinely are not.

1.2 Application: This procedure applies solely to the Level 1 C7-C16 gas chromatographic analysis of concentrates of organic extracts, neat liquids, and of LC fractions. Throughout the procedure, it is assumed the analyst has been given a properly prepared sample.

1.3 Sensitivity: The sensitivity of this procedure, defined as the slope of a plot of response versus concentration, is dependent on the instrument and must be verified regularly. TRW experience indicates the nominal range is of the order of 77 uV·V·sec·uL/ng of n-heptane and 79 uV·sec·ul/ng of n-hexadecane. The instrument is capable of perhaps one hundredfold greater sensitivity. The level specified here is sufficient for Level 1 analysis.

1.4 Detection limit: The detection limit of this procedure as written is 1.3 ng/uL for a 1 uL injection of n-decane. This limit is arbitrarily based on defining the minimum detectable response as 100 uv·sec. This is an easier operational definition than defining the minimum detection limit to be that amount of material which yields a signal twice the noise level.

1.5 Range: The range of the procedure will be concentrations of 1.3 ng/uL and greater.

1.6 Limitations

1.6.1 Reporting limitations: It should be noted that a typical environmental sample will contain compounds which: (a) will not elute in the specified boiling ranges and thus will not be reported, and/or (b) will not elute from the column at all and thus will not be reported. Consequently, the organic content of the sample as reported is a lower bound and should be regarded as such.

1.6.2 **Calibration limitations:** Quantitation is based on calibration with n-decane. Data should therefore be reported as, e.g., mg C8/m^3 as n-decane. Since response varies linearly with carbon number (over a wide range the assumption may involve a 20% error), it is clear that heptane (C7) detected in a sample and quantitated as decane will be overestimated. Likewise, hexadecane (C16) quantitated as decane will be underestimated. From previous data, it is estimated the error involved is on the order of 6-7%.

1.6.3 **Detection limitations:** The sensitivity of the flame ionization detector varies from compound to compound. However, n-alkanes have a greater response than other classes. Consequently, using an n-alkane as a calibrant and assuming equal responses of all other compounds tends to give low reported values.

2.0 SUMMARY OF METHOD

2.1 A mL aliquot of all 10-mL concentrates is disbursed for GC-TCO analysis. With boiling point-retention time and response-amount calibration curves, the data (peak retention times and peak areas) are interpreted by first summing peak areas in the ranges obtained from the boiling point-retention time calibration. Then, with the response-amount calibration curve, the area sums are converted to amounts of material in the reported boiling point ranges.

2.2 After the instrument is set up, the boiling point-retention time calibration is effected by injecting a mixture of n-C7 through n-C16 hydrocarbons and operating the standard temperature program. Response-quantity calibrations are accomplished by injecting n-decane in n-pentane standards and performing the standard temperature program.

2.3 Definitions

2.3.1 **GC:** Gas chromatography or gas chromatograph.

2.3.2 **C7-C16 n-alkanes:** Heptane through hexadecane.

2.3.3 **GCA temperature program:** 4 min isothermal at 60°C, 10°C/min from 60° to 220°C.

2.3.4 **TRW temperature program:** 5 min isothermal at room temperature, then program from 30°C to 250°C at 15°C/min.

3.0 INTERFERENCES

Not applicable.

4.0 APPARATUS AND MATERIALS

4.1 Gas chromatograph: This procedure is intended for use on a Varian 1860 gas chromatograph, equipped with dual flame ionization detectors and a linear temperature programmer. Any equivalent instrument can be used provided that electrometer settings, etc., be changed appropriately.

4.2 Gases:

4.2.1 **Helium:** Minimum quality is reactor grade. A 4A or 13X molecular sieve drying tube is required. A filter must be placed between the trap and the instrument. The trap should be recharged after every third tank of helium.

4.2.2 **Air:** Zero grade is satisfactory.

4.2.3 **Hydrogen:** Zero grade.

4.3 Syringe: Syringes are Hamilton 701N, 10 uL, or equivalent.

4.4 Septa: Septa will be of such quality as to produce very low bleed during the temperature program. An appropriate septum is Supelco Microsep 138, which is Teflon-backed. If septum bleed cannot be reduced to a negligible level, it will be necessary to install septum swingers on the instrument.

4.5 Recorder: The recorder of this procedure must be capable of not less than 1 mV full-scale display, a 1-sec time constant and 0.5 in. per min chart rate.

4.6 Integrator: An integrator is required. Peak area measurement by hand is satisfactory but too time-consuming. If manual integration is required, the method of "height times width at half height" is used.

4.7 Columns:

4.7.1 **Preferred column:** 6 ft x 1/8 in. O.D. stainless steel column of 10% OV-101 on 100/120 mesh Supelcoport.

4.7.2 **Alternate column:** 6 ft x 1/8 in. O.D. stainless steel column of 10% OV-1 (or other silicon phase) on 100/120 mesh Supelcoport.

4.8 Syringe cleaner: Hamilton syringe cleaner or equivalent connected to a suitable vacuum source.

5.0 REAGENTS

5.1 Pentane: "Distilled-in-Glass" (reg. trademark) or "Nanograde" (reg. trademark) for standards and for syringe cleaning.

5.2 Methylene chloride: "Distilled-in-Glass" (reg. trademark) or "Nanograde" (reg. trademark) for syringe cleaning.

6.0 SAMPLING HANDLING AND PRESERVATION

6.1 The extracts are concentrated in a Kuderna-Danish evaporator to a volume less than 10 mL. The concentrate is then quantitatively transferred to a 10-mL volumetric flask and diluted to volume. A 1-mL aliquot is taken for both this analysis and possible subsequent GC/MS analysis and set aside in the sample bank. For each GC-TCO analysis, obtain the sample sufficiently in advance to allow it to warm to room temperature. For example, after one analysis is started, return that sample to the sample bank and take the next sample.

7.0 PROCEDURES

7.1 Setup and checkout: Each day, the operator will verify the following:

7.1.1 That supplies of carrier gas, air and hydrogen are sufficient, i.e., that each tank contains > 100 psig.

7.1.2 That, after replacement of any gas cylinder, all connections leading to the chromatograph have been leak-checked.

7.1.3 That the carrier gas flow rate is 30 ± 2 mL/min, the hydrogen flow rate is 30 ± 2 mL/min, and the air flow rate is 300 ± 20 mL/min.

7.1.4 That the electrometer is functioning properly.

7.1.5 That the recorder and integrator are functioning properly.

7.1.6 That the septa have been leak-checked (leak-checking is effected by placing the soap bubble flow meter inlet tube over the injection port adaptors), and that no septum will be used for more than 20 injections.

7.1.7 That the list of samples to be run is ready.

7.2 Retention time calibration:

7.2.1 To obtain the temperature ranges for reporting the results of the analyses, the chromatograph is given a normal boiling point-retention time calibration. The n-alkanes, their boiling points, and data reporting ranges are given in the table below:

	NBP,°C	Reporting Range,°C	Report As
n-heptane	98	90-110	C7
n-octane	126	110-140	C8
n-nonane	151	140-160	C9
n-decane	174	160-180	C10
n-undecane	194	180-200	C11
n-dodecane	214	200-220	C12
n-tridecane	234	220-240	C13
n-tetradecane	252	240-260	C14
n-pentadecane	270	260-280	C15
n-hexadecane	288	280-300	C16

7.2.2 **Preparation of standards:** Preparing a mixture of the C7-C16 alkanes is required. There are two approaches: (1) use of a standards kit (e.g., Polyscience Kit) containing bottles of mixtures of selected n-alkanes which may be combined to produce a C7-C16 standard; or (2) use of bottles of the individual C7-C16 alkanes from which accurately known volumes may be taken and combined to give a C7-C16 mixture.

7.2.3 **Procedure for retention time calibration:** This calibration is performed at the start of an analytical program; the mixture is chromatographed at the start of each day. To attain the required retention time precision, both the carrier gas flow rate and the temperature program specifications must be observed. Details of the procedure depend on the instrument being used. The general procedure is as follows:

7.2.3.1 Set the programmer upper limit at 250°C. If this setting does not produce a column temperature of 250°C, find the correct setting.

7.2.3.2 Set the programmer lower limit at 30°C.

7.2.3.3 Verify that the instrument and samples are at room temperature.

7.2.3.4 Inject 1 uL of the n-alkane mixture.

7.2.3.5 Start the integrator and recorder.

7.2.3.6 Allow the instrument to run isothermally at room temperature for five min.

7.2.3.7 Shut the oven door.

7.2.3.8 Change the mode to Automatic and start the temperature program.

7.2.3.9 Repeat Steps 1-9 a sufficient number of times so that the relative standard deviation of the retention times for each peak is <5%.

7.3 Response calibration:

7.3.1 For the purposes of a Level 1 analysis, response-quantity calibration with n-decane is adequate. A 10-uL volume of n-decane is injected into a tared 10 mL volumetric flask. The weight injected is obtained and the flask is diluted to the mark with n-pentane. This standard contains about 730 ng n-decane per uL n-pentane. The exact concentration depends on temperature, so that a weight is required. Two serial tenfold dilutions are made from this standard, giving standards at about 730, 73, and 7.3 ng n-decane per uL n-pentane, respectively.

7.3.2 **Procedure for response calibration:** This calibration is performed at the start of an analytical program and monthly thereafter. The most concentrated standard is injected once each day. Any change in calibration necessitates a full calibration with new standards. Standards are stored in the refrigerator locker and are made up monthly.

7.3.2.1 Verify that the instrument is set up properly.

7.3.2.2 Set electrometer at 1×10^{-10} A/mV.

7.3.2.3 Inject 1 uL of the highest concentration standard.

7.3.2.4 Run standard temperature program as specified above.

7.3.2.5 Clean syringe.

7.3.2.6 Make repeated injections of all three standards until the relative standard deviations of the areas of each standard are $\leq 5\%$.

7.4 Sample analysis procedure:

7.4.1 The following apparatus is required:

7.4.1.1 Gas chromatograph set up and working.

7.4.1.2 Recorder, integrator working.

7.4.1.3 Syringe and syringe cleaning apparatus.

7.4.1.4 Parameters: Electrometer setting is 1×10^{-10} A/mV; recorder is set at 0.5 in./min and 1 mV full-scale.

7.4.2 Steps in the procedure are:

7.4.2.1 Label chromatogram with the data, sample number, etc.

7.4.2.2 Inject sample.

7.4.2.3 Start integrator and recorder.

7.4.2.4 After isothermal operation for 5 min, begin temperature program.

7.4.2.5 Clean syringe.

7.4.2.6 Return sample; obtain new sample.

7.4.2.7 When analysis is finished, allow instrument to cool. Turn chromatogram and integrator output and data sheet over to data analyst.

7.5 Syringe cleaning procedure:

7.5.1 Remove plunger from syringe.

7.5.2 Insert syringe into cleaner; turn on aspirator.

7.5.3 Fill pipet with pentane; run pentane through syringe.

7.5.4 Repeat with methylene chloride from a separate pipet.

7.5.5 Flush plunger with pentane followed by methylene chloride.

7.5.6 Repeat with methylene chloride.

7.6 Sample analysis decision criterion: The data from the TCO analyses of organic extract and rinse concentrates are first used to calculate the total concentration of C7-C16 hydrocarbon-equivalents (Paragraph 7.7.3) in the sample with respect to the volume of air actually sampled, i.e., ug/m^3. On this basis, a decision is made both on whether to calculate the quantity of each n-alkane equivalent present and on which analytical procedural pathway will be followed. If the total organic content is great enough to warrant continuing the analysis -- >500 ug/m^3 -- a TCO of less than 75 ug/m^3 will require only LC fractionation and gravimetric determinations and IR spectra to be obtained on each fraction. If the TCO is greater than 75 ug/m^3, then the first seven LC fractions of each sample will be reanalyzed using this same gas chromatographic technique.

7.7 Calculations:

7.7.1 Boiling Point - Retention Time Calibration: The required data for this calibration are on the chromatogram and on the data sheet. The data reduction is performed as follows:

7.7.1.1 Average the retention times and calculate relative standard deviations for each n-hydrocarbon.

7.7.1.2 Plot average retention times as abscissae versus normal boiling points as ordinates.

7.7.1.3 Draw in calibration curve.

7.7.1.4 Locate and record retention times corresonding to boiling ranges 90-100, 110-140, 140-160, 160-180, 180-200, 200-220, 220-240, 240-260, 260-280, 280-300°C.

7.7.2 **Response-amount calibration:** The required data for this calibration are on the chromatogram and on the data sheet. The data reduction is performed as follows:

7.7.2.1 Average the area responses of each standard and calculate relative standard deviations.

7.7.2.2 Plot response (uv·sec) as ordinate versus ng/uL as abscissa.

7.7.2.3 Draw in the curve. Perform least squares regression and obtain slope (uV·sec·uL/ng).

7.7.3 **Total C7-C16 hydrocarbons analysis:** The required data for this calculation are on the chromatogram and on the data sheet. The data reduction is performed as follows:

7.7.3.1 Sum the areas of all peaks within the retention time range of interest.

7.7.3.2 Convert this area (uV·sec) to ng/uL by dividing by the weight response for n-decane (uV·sec.uL/ng).

7.7.3.3 Multiply this weight by the total concentrate volume (10 mL) to get the weight of the C7-C16 hydrocarbons in the sample.

7.7.3.4 Using the volume of gas sampled or the total weight of sample acquired, convert the result of Step 7.7.3.3 above to ug/m^3.

7.7.3.5 If the value of total C7-C16 hydrocarbons from Step 7.7.3.4 above exceeds 75 ug/m^3, calculate individual hydrocarbon concentrations in accordance with the instructions in Paragraph 7.7.5.5 below.

7.7.4 **Individual C7-C16 n-Alkane Equivalent Analysis:** The required data from the analyses are on the chromatogram and on the data sheet. The data reduction is performed as follows:

7.7.4.1 Sum the areas of peaks in the proper retention time ranges.

7.7.4.2 Convert areas (uV·sec) to ng/uL by dividing by the proper weight response (uV·sec·uL/ng).

7.7.4.3 Multiply each weight by total concentrate volume (10 mL) to get weight of species in each range of the sample.

7.7.4.4 Using the volume of gas sampled on the total weight of sample acquired, convert the result of Step 7.7.4.3 above to ug/m^3.

8.0 QUALITY CONTROL

8.1 Appropriate QC is found in the pertinent procedures throughout the method.

9.0 METHOD PERFORMANCE

9.1 Even relatively comprehensive error propagation analysis is beyond the scope of this procedure. With reasonable care, peak area reproducibility of a standard should be of the order of 1% RSD. The relative standard deviation of the sum of all peaks in a fairly complex waste might be of the order of 5-10%. Accuracy is more difficult to assess. With good analytical technique, accuracy and precision should be of the order of 10-20%.

10.0 REFERENCES

1. Emissions Assessment of Conventional Stationary Combustion Systems: Methods and Procedure Manual for Sampling and Analysis, Interagency Energy/Environmental R&D Program, Industrial Environmental Research Laboratory, Research Triangle Park, NC 27711, EPA-600/7-79-029a, January 1979.

EPA METHOD 0030

Volatile Organic Sampling Train

METHOD 0030

VOLATILE ORGANIC SAMPLING TRAIN

1.0 PRINCIPLE AND APPLICATION

1.1 Principle

1.1.1 This method describes the collection of volatile principal organic hazardous constituents (POHCs) from the stack gas effluents of hazardous waste incinerators. For the purpose of definition, volatile POHCs are those POHCs with boiling points less than 100°C. If the boiling point of a POHC of interest is less than 30°C, the POHC may break through the sorbent under the conditions of the sample collection procedure.

1.1.2 Field application for POHCs of this type should be supported by laboratory data which demonstrate the efficiency of a volatile organic sampling train (VOST) to collect POHCs with boiling points less than 30°C. This may require using reduced sample volumes collected at flow rates between 250 and 500 mL/min. Many compounds which boil above 100°C (e.g., chlorobenzene) may also be efficiently collected and analyzed using this method. VOST collection efficiency for these compounds should be demonstrated, where necessary, by laboratory data of the type described above.

1.1.3 This method employs a 20-liter sample of effluent gas containing volatile POHCs which is withdrawn from a gaseous effluent source at a flow rate of 1 L/min, using a glass-lined probe and a volatile organic sampling train (VOST). (Operation of the VOST under these conditions has been called FAST-VOST.) The gas stream is cooled to 20°C by passage through a water-cooled condenser and volatile POHCs are collected on a pair of sorbent resin traps. Liquid condensate is collected in an impinger placed between the two resin traps. The first resin trap (front trap) contains approximately 1.6 g Tenax and the second trap (back trap) contains approximately 1 g each of Tenax and petroleum-based charcoal (SKC Lot 104 or equivalent), 3:1 by volume. A total of six pairs of sorbent traps may be used to collect volatile POHCs from the effluent gas stream.

1.1.4 An alternative set of conditions for sample collection has been used. This method involves collecting sample volume of 20 liters or less at reduced flow rate. (Operation of the VOST under these conditions has been referred to as SLO-VOST.) This method has been used to collect 5 liters of sample (0.25 L/min for 20 min) or 20 liters of sample (0.5 L/min for 40 min) on each pair of sorbent cartridges. Smaller sample volumes collected at lower flow rates should be considered when the boiling points of the POHCs of interest are below 35°C. A total of six pairs of sorbent traps may be used to collect volatile POHCs from the effluent gas stream.

1.1.5 Analysis of the traps is carried out by thermal desorption purge-and-trap by gas chromatography/mass spectrometry (see Method 5040). The VOST is designed to be operated at 1 L/min with traps being replaced every 20 min for a total sampling time of 2 hr. Traps may be analyzed separately or combined onto one trap to improve detection limit. However, additional flow rates and sampling times are acceptable. Recent experience has shown that when less than maximum detection ability is required, it is acceptable and probably preferable to operate the VOST at 0.5 L/min for a total of three 40-min periods. This preserves the 2-hr sampling period, but reduces the number of cartridge changes in the field as well as the number of analyses required.

1.2 Application

1.2.1 This method is applicable to the determination of volatile POHCs in the stack gas effluent of hazardous waste incinerators. This method is designed for use in calculating destruction and removal efficiency (DRE) for the volatile POHCs and to enable a determination that DRE values for removal of the volatile POHCs are equal to or greater than 99.99%.

1.2.2 The sensitivity of this method is dependent upon the level of interferences in the sample and the presence of detectable levels of volatile POHCs in blanks. The target detection limit of this method is 0.1 ug/m^3 (ng/L) of flue gas, to permit calculation of a DRE equal to or greater than 99.99% for volatile POHCs which may be present in the waste stream at 100 ppm. The upper end of the range of applicability of this method is limited by breakthrough of the volatile POHCs on the sorbent traps used to collect the sample. Laboratory development data have demonstrated a range of 0.1 to 100 ug/m^3 (ng/L) for selected volatile POHCs collected on a pair of sorbent traps using a total sample volume of 20 liters or less (see Paragraph 1.1.4).

1.2.3 This method is recommended for use only by experienced sampling personnel and analytical chemists or under close supervision by such qualified persons.

1.2.4 Interferences arise primarily from background contamination of sorbent traps prior to or after use in sample collection. Many potential interferences can be due to exposure of the sorbent materials to solvent vapors prior to assembly and exposure to significant concentrations of volatile POHCs in the ambient air at hazardous waste incinerator sites.

1.2.5 To avoid or minimize the low-level contamination of train components with volatile POHCs, care should be taken to avoid contact of all interior surface or train components with synthetic organic materials (e.g., organic solvents, lubricating and sealing greases), and train components should be carefully cleaned and conditioned according to the procedures described in this protocol.

2.0 APPARATUS

2.1 Volatile Organic Sampling Train: A schematic diagram of the principal components of the VOST is shown in Figure 1 and a diagram of one acceptable version of the VOST is shown in Figure 2. The VOST consists of a glass-lined probe followed by an isolation valve, a water-cooled glass condenser, a sorbent cartridge containing Tenax (1.6 g), an empty impinger for condensate removal, a second water-cooled glass condenser, a second sorbent cartridge containing Tenax and petroleum-based charcoal (3:1 by volume; approximately 1 g of each), a silica gel drying tube, a calibrated rotameter, a sampling pump, and a dry gas meter. The gas pressure during sampling and for leak-checking is monitored by pressure gauges which are in line and downstream of the silica gel drying tube. The components of the sampling train are described below.

2.1.1 **Probe:** The probe should be made of stainless steel with a borosilicate or quartz glass liner. The temperature of the probe is to be maintained above 130°C but low enough to ensure a resin temperature of 20°C. A water-cooled probe may be required at elevated stack temperatures to protect the probe and meet the above requirements. Isokinetic sample collection is not a requirement for the use of VOST since the compounds of interest are in the vapor phase at the point of sample collection.

2.1.2 **Isolation valve:** The isolation valve should be a greaseless stopcock with a glass bore and sliding Teflon plug with Teflon wipers (Ace 8193 or equivalent).

2.1.3 **Condensers:** The condensers (Ace 5979-14 or equivalent) should be of sufficient capacity to cool the gas stream to 20°C or less prior to passage through the first sorbent cartridge. The top connection of the condenser should be able to form a leak-free, vacuum-tight seal without using sealing greases.

2.1.4 **Sorbent cartridges:**

2.1.4.1 The sorbent cartridges used for the VOST may be used in either of two configurations: the inside-outside (I/O) configuration in which the cartridge is held within an outer glass tube and in a metal carrier, and the inside-inside (I/I) configuration in which only a single glass tube is used, with or without a metal carrier. In either case, the sorbent packing will be the same.

2.1.4.1.1 The first of a pair of sorbent cartridges shall be packed with approximately 1.6 g Tenax GC resin and the second cartridge of a pair shall be packed with Tenax GC and petroleum-based charcoal (3:1 by volume; approximately 1 g of each).

2.1.4.1.2 The second sorbent cartridge shall be packed so that the sample gas stream passes through the Tenax layer first and then through the charcoal layer.

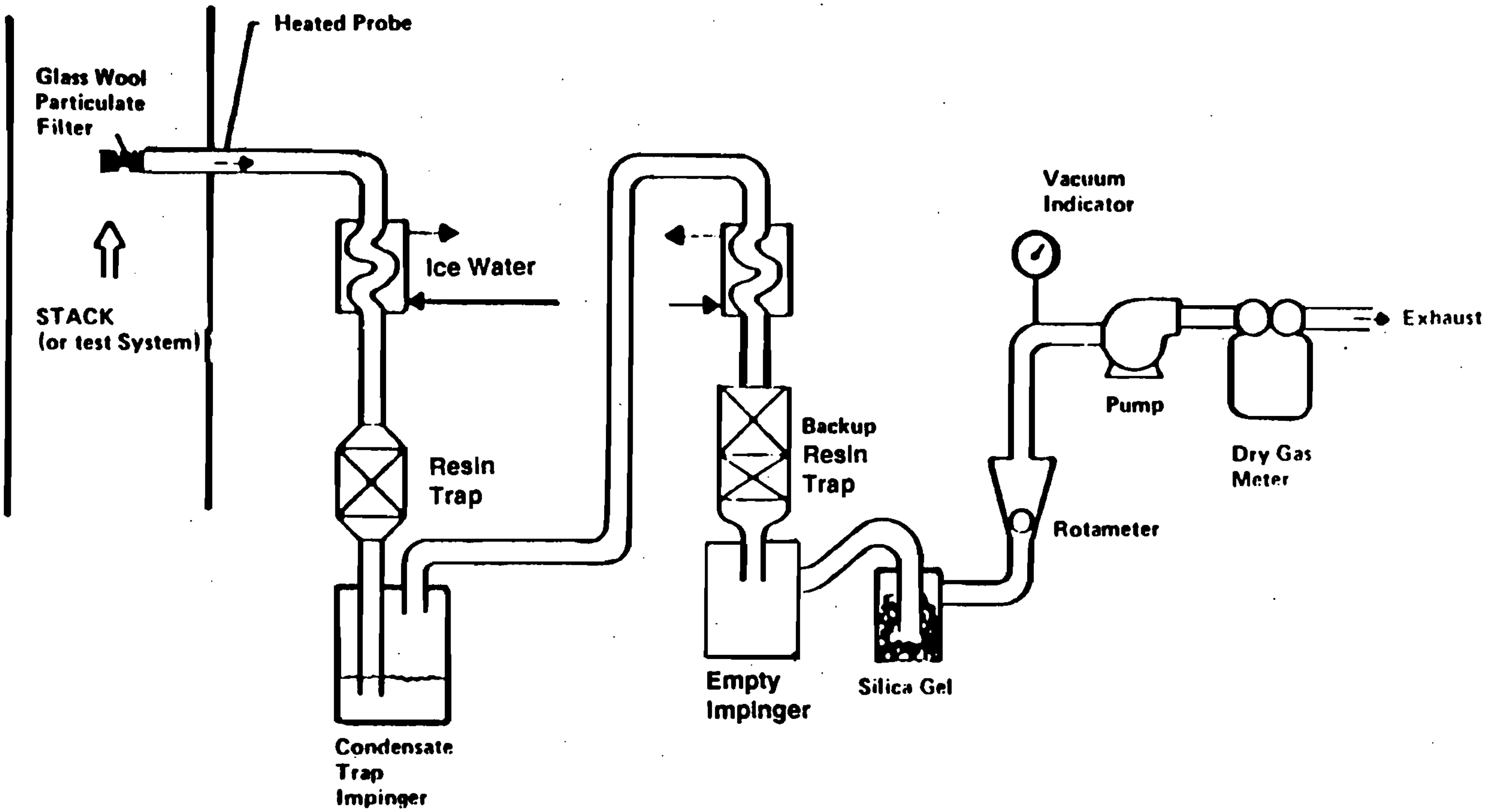

Figure 1. Schematic of Volatile Organic Sampling Train (VOST).

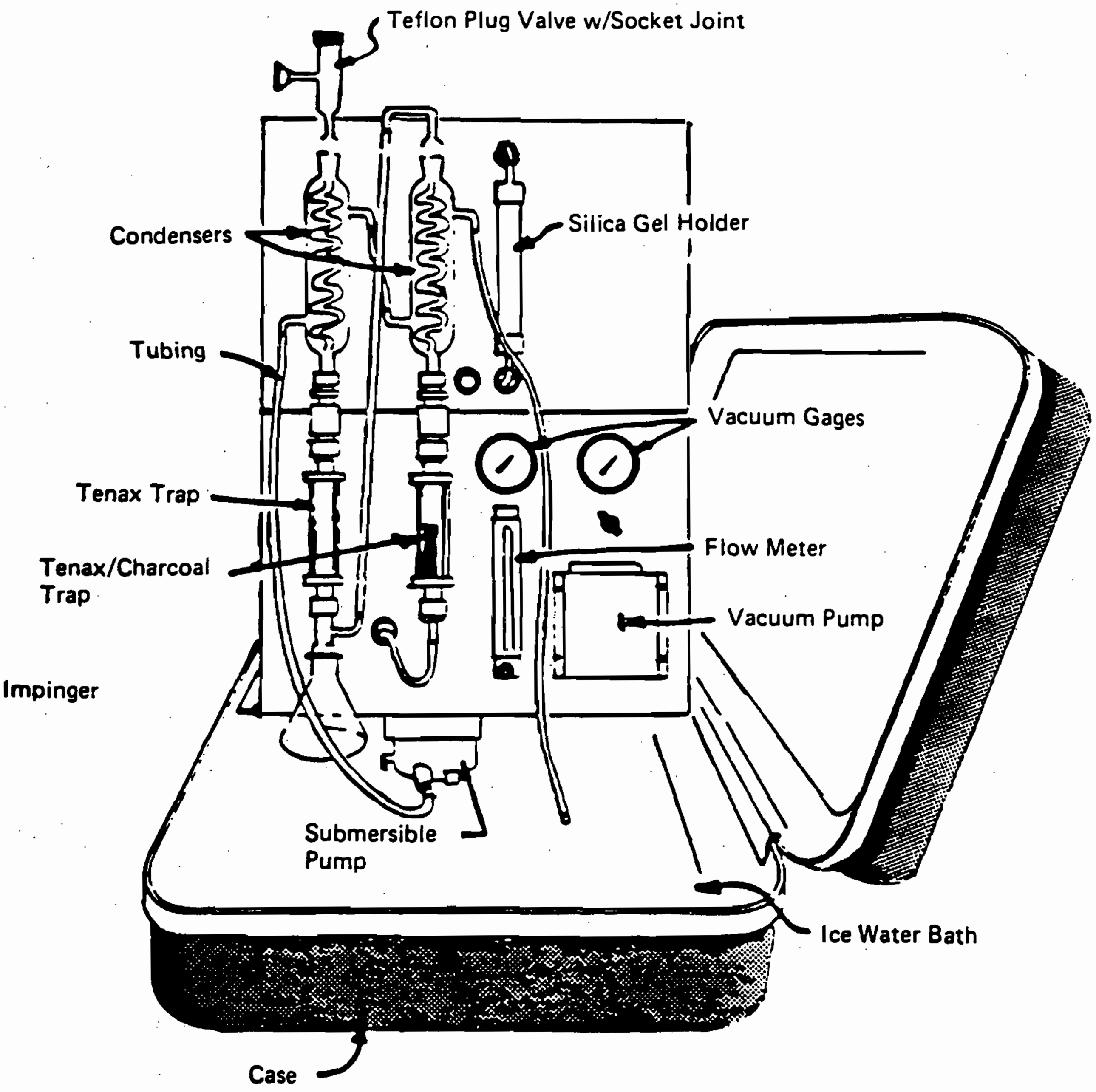

Figure 2. Volatile Organic Sampling Train (VOST).

2.1.4.2 The sorbent cartridges shall be glass tubes with approximate dimensions of 10 cm by 1.6 cm I.D. The two acceptable designs (I/O, I/I) for the sorbent cartridge are described in further detail below.

2.1.4.2.1 **Inside/Inside sorbent cartridge:** A diagram of an I/I sorbent cartridge is shown in Figure 3. This cartridge is a single glass tube (10 cm by 1.6 cm I.D.) which has the ends reduced in size to accommodate a 1/4- or 3/8-in. Swagelok or Cajon gas fitting. The resin is held in place by glass wool at each end of the resin layer. The amounts of each type of sorbent material used in the I/I design are the same as for the I/O design. Threaded end caps are placed on the sorbent cartridge after packing with sorbent to protect the sorbent from contamination during storage and transport.

2.1.4.2.2 **Inside/Outside type sorbent cartridge:** A diagram of an I/O sorbent cartridge is shown in Figure 4. In this design the sorbent materials are held in the glass tube with a fine mesh stainless steel screen and a C-clip. The glass tube is then placed within a larger diameter glass tube and held in place using Viton O-rings. The purpose of the outer glass tube is to protect the exterior of the resin-containing tube from contamination. The two glass tubes are held in a stainless steel cartridge holder, where the ends of the glass tubes are held in place by Viton O-rings placed in machine grooves in each metal end piece. The three cylindrical rods are secured in one of the metal end pieces and fastened to the other end piece using knurled nuts, thus sealing the glass tubes into the cartridge holder. The end pieces are fitted with a threaded nut onto which a threaded end cap is fitted with a Viton O-ring seal, to protect the resin from contamination during transport and storage.

2.1.5 **Metering system:** The metering system for VOST shall consist of vacuum gauges, a leak-free pump (Thomas Model 107 or equivalent, Thomas Industries, Sheboygan, Wisconsin), a calibrated rotameter (Linde Model 150, Linde Division of Union Carbide, Keasbey, New Jersey) for monitoring the gas flow rate, a dry gas meter with 2% accuracy at the required sampling rate, and related valves and equipment. Provisions should be made for monitoring the temperature of the sample gas stream between the first condenser and first sorbent cartridge. This can be done by placing a thermocouple on the exterior glass surface of the outlet from the first condenser. The temperature at that point should be less than 20°C. If it is not, an alternative condenser providing the required cooling capacity must be used.

2.1.6 **Sample transfer lines:** All sample transfer lines to connect the probe to the VOST shall be less than 5 ft in length, and shall be heat-traced Teflon with connecting fittings which are capable of forming leak-free, vacuum-tight connections without the use of sealing grease.

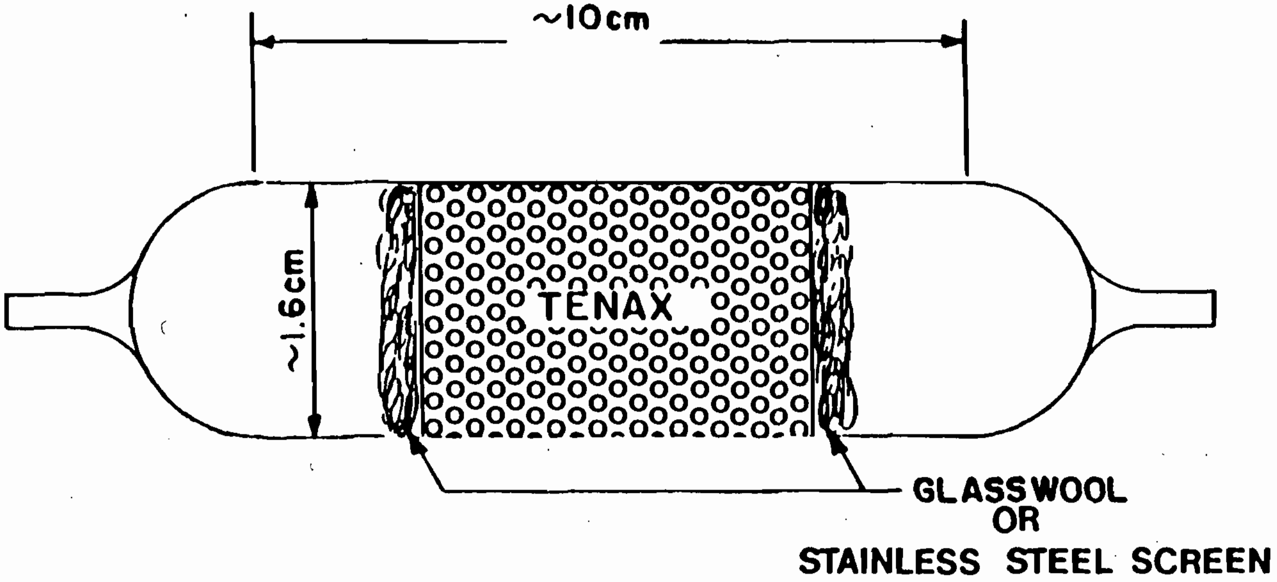

Figure 3. Inside-inside vost cartridge

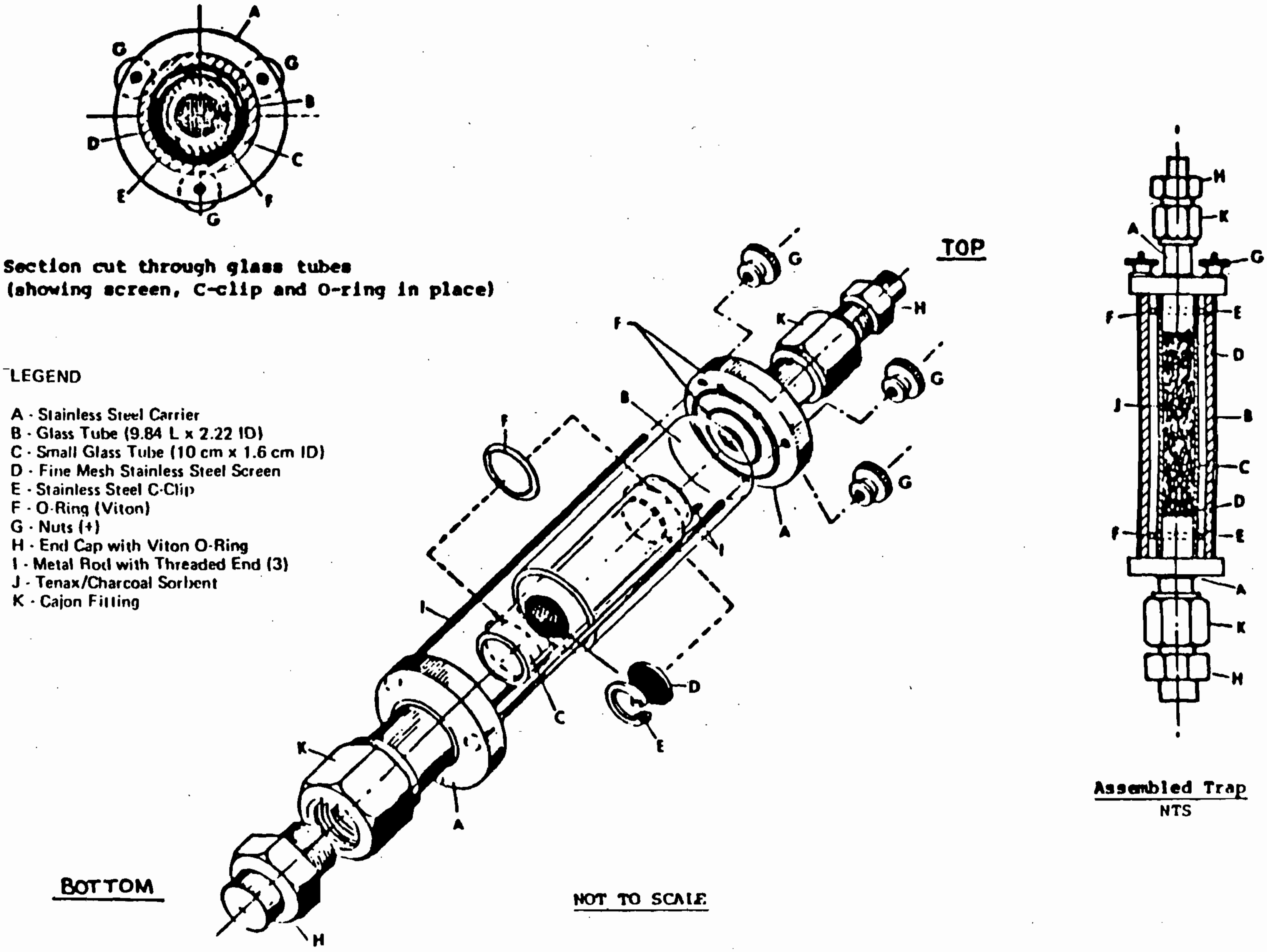

**Section cut through glass tubes
(showing screen, C-clip and O-ring in place)**

LEGEND

- A - Stainless Steel Carrier
- B - Glass Tube (9.84 L x 2.22 ID)
- C - Small Glass Tube (10 cm x 1.6 cm ID)
- D - Fine Mesh Stainless Steel Screen
- E - Stainless Steel C-Clip
- F - O-Ring (Viton)
- G - Nuts (+)
- H - End Cap with Viton O-Ring
- I - Metal Rod with Threaded End (3)
- J - Tenax/Charcoal Sorbent
- K - Cajon Fitting

Figure 4. Sorbent Trap Assembly (I/O)
Volatile Organic Sampling Train (VOST)

All other sample transfer lines used with the VOST shall be Teflon with connecting fittings that are capable of forming leak-free, vacuum-tight connections without the use of sealing grease.

3.0 REAGENTS AND MATERIALS

3.1 2,6-Diphenylene oxide polymer (Tenax, 35/60 mesh):

3.1.1 The new Tenax is Soxhlet extracted for 24 hr with methanol (Burdick & Jackson, pesticide grade or equivalent). The Tenax is dried for 6 hr in a vacuum oven at 50°C before use. Users of I/O and I/I sorbent cartridges have used slightly different thermal conditioning procedures. I/O sorbent cartridges packed with Tenax are thermally conditioned by flowing organic-free nitrogen (30 mL/min) through the resin while heating to 190°C. Some users have extracted new Tenax and charcoal with pentane to remove nonpolar impurities. However, these users have experienced problems with residual pentane in the sorbents during analysis.

3.1.2 If very high concentrations of volatile POHCs have been collected on the resin (e.g., micrograms of analytes), the sorbent may require Soxhlet extraction as described above. Previously used Tenax cartridges are thermally reconditioned by the method described above.

3.2 Charcoal (SKC petroleum-base or equivalent): New charcoal is prepared and charcoal is reconditioned as described in Paragraph 4.4. New charcoal does not require treatment prior to assembly into sorbent cartridges. Users of VOST have restricted the types of charcoal used in sorbent cartridges to only petroleum-based types. Criteria for other types of charcoal are acceptable if recovery of POHC in laboratory evaluations meet the criteria of 50 to 150%.

3.3 Viton-O-Ring: All O-rings used in VOST shall be Viton. Prior to use, these O-rings should be thermally conditioned at 200°C for 48 hr. O-rings should be stored in clean, screw-capped glass containers prior to use.

3.4 Glass tubes/Condensers: The glass resin tubes and condensers should be cleaned with a nonionic detergent in an ultrasonic bath, rinsed well with organic-free water, and dried at 110°C. Resin tubes of the I/O design should be assembled prior to storage as described in Paragraph 4.1. Resin tubes of the I/I design can be stored in glass culture tube containers with cotton cushioning and Teflon-lined screw caps. Condensers can be capped with appropriate end caps prior to use.

3.5 Metal parts: The stainless steel carriers, C-clips, end plugs, and screens used in the I/O VOST design are cleaned by ultrasonication in a warm nonionic detergent solution, rinsed with distilled water, air-dried, and heated in a muffle furnace for 2 hr at 400°C. Resin tubes of the I/I design require Swagelok or equivalent end caps with Supelco M-1 ferrules. These should be heated at 190°C along with the assembled cartridges.

3.6 Silica gel (Indicating type, 6-16 mesh): New silica gel may be used as received. Silica gel which has been previously used should be dried for 2 hr at 175°C (350°F).

3.7 Cold packs: Any commercially available reusable liquids or gels that can be repeatedly frozen are acceptable. They are typically sold in plastic containers as "Blue Ice" or "Ice-Packs." Enough should be used to keep cartridges at or near 4°C.

3.8 Water: Water used for cooling train components in the field may be tap water; and water used for rinsing glassware should be organic-free.

3.9 Glass wool: Glass wool should be Soxhlet extracted for 8 to 16 hr, using methanol, and oven dried at 110°C before use.

4.0 SAMPLE HANDLING AND PROCEDURE

4.1 Assembly:

4.1.1 The assembly and packing of the sorbent cartridges should be carried out in an area free of volatile organic material, preferably a laboratory in which no organic solvents are handled or stored and in which the laboratory air is charcoal filtered. Alternatively, the assembly procedures can be conducted in a glove box which can be purged with organic-free nitrogen.

4.2 Tenax cartridges:

4.2.1 The Tenax, glass tubes, and metal cartridge parts are cleaned and stored (see Section 3.0). Approximately 1.6 g of Tenax is weighed and packed into the sorbent tube which has a stainless steel screen and C-clip (I/O design) or glass wool (I/I design) in the downstream end. The Tenax is held in place by inserting a stainless steel screen and C-clips in the upstream end (I/O design) or glass wool (I/I design). Each cartridge should be marked, using an engraving tool, with an arrow to indicate the direction of sample flow, and a serial number.

4.2.2 Conditioned resin tubes of the I/O design are then assembled into the metal carriers according to the previously described inside/inside or inside/outside procedures (with end caps) and are placed on cold packs for storage and transport. Conditioned resin tubes of the I/I design are capped and placed on cold packs for storage and transport.

4.3 Tenax/Charcoal tubes

4.3.1 The Tenax, charcoal, and metal cartridge parts are cleaned and stored as previously described (see Section 3.0). The tubes are packed with approximately a 3:1 volume ratio of Tenax and charcoal (approximately 1 g each). The Tenax and charcoal are held in place by the stainless steel screens and C-clips (I/O design) or by glass wool (I/I design). The glass tubes containing the Tenax and charcoal are then conditioned as described below (see Paragraph 4.4). Place the I/O glass tubes in the metal carriers (see Paragraph 2.1.4.2.2), put end caps on the assembled cartridges, mark direction of sample flow and serial number, and place the assembled cartridges on cold packs for storage and transport.

4.3.2 Glass tubes of the I/I design are conditioned, and stored in the same manner as the I/O tubes.

4.4 Trap Conditioning - QC

4.4.1 Following assembly and leak-checking, the traps are connected in reverse direction to sampling to a source of organic-free nitrogen, and nitrogen is passed through each trap at a flow rate of 40 mL/min, while the traps are heated to 190°C for 12-28 hr. The actual conditioning period may be determined based on adequacy of the resulting blank checks.

4.4.2 The following procedure is used to blank check each set of sampling cartridges prior to sampling to ensure cleanliness. The procedure provides semi-quantitative data for organic compounds with boiling points below 110°C on Tenax and Tenax/Charcoal cartridges. It is not intended as a substitute for Method 5040.

4.4.2.1 The procedure is based on thermal desorption of each set of two cartridges, cryofocusing with liquid nitrogen onto a trap packed with glass beads, followed by thermal desorption from the trap and analysis by GC/FID.

4.4.2.2 The detection limit is based on the analysis of Tenax cartridges spiked with benzene and toluene and is around 2 ng for each compound.

4.4.2.3 The results of analyzing spiked cartridges on a daily basis should not vary by more than 20 percent. If the results are outside this range, the analytical system must be evaluated for the probable cause and a second spiked cartridge analyzed.

4.4.2.4 The GC operating conditions are as follows:

GC Operating Conditions

Column: Packed column 6 ft x 1/8" stainless steel 1.0 percent SP-1000 on Carbopack B 60/80, or equivalent.
Temperature program: 50°C for 5 min, 20°C/min increase to 190°C, hold 13 min.
Injector: 200°C.
Detector: F.I.D. 250°C.
Carrier Gas: Helium at 25 mL/min.
Sample valve: Valco 6-port with 40" x 1/16" stainless steel trap packed with 60/80 mesh glass beads.
Cryogen: Liquid nitrogen.
Trap heater: Boiling water, hot oil, or electrically heated.

Desorption heater: Supelco "clam shell" (high capacity carrier gas purifier) heater and Variac, adjusted to 180°C to 200°C.

4.4.2.5 Calibration is accomplished by preparing a spiked Tenax cartridge with benzene and toluene and analyzing according to the standard operating procedure. A standard of benzene, toluene and bromofluorobenzene (BFB) is prepared by injecting 2.0 uL of benzene and toluene and 1.0 uL of BFB into 10 mL of methanol. The concentration of this stock is 175 ng/uL of benzene and toluene, and 150 ng/uL BFB. One microliter of the stock standard is injected onto a Tenax cartridge through a heated injection port set at 150°C. A GC oven can be used for this with the oven at room temperature. Helium carrier gas is set at 50 mL/min. The solvent flush technique should be used. After two min, remove the Tenax cartridge and place in the desorption heater for analysis. BFB is also used as an internal standard spike for GC/MS analysis which provides a good comparison between GC/FID and GC/MS. The results of this spike analysis should not vary more than 20 percent day to day. Initially and then periodically this spiked Tenax should be reanalyzed a second time to verify that the 10 min desorption time and 180-200°C temperature are adequate to remove all of the spiked components. It should be noted that only one spiked Tenax cartridge need be prepared and analyzed daily unless otherwise needed to ensure proper instrument operation.

An acceptable blank level is left to the discretion of the method analyst. An acceptable level is one that allows adequate determination of expected components emitted from the waste being burned.

4.4.3 After conditioning, traps are sealed and placed on cold packs until sampling is accomplished. Conditioned traps should be held for a minimum amount of time to prevent the possibility of contamination.

4.4.4 It may be useful to spike the Tenax and Tenax/charcoal traps with the compounds of interest to ensure that they can be thermally desorbed under laboratory conditions. After spiked traps are analyzed they may be reconditioned and packed for sampling.

4.5 Pretest preparation:

4.5.1 All train components shall be cleaned and assembled as previously described. A dry gas meter shall have been calibrated within 30 days prior to use, using an EPA-supplied standard orifice.

4.5.2 The VOST is assembled according to the schematic diagram in Figure 1. The cartridges should be positioned so that sample flow is through the Tenax first and then the Tenax/charcoal. Cooling water should be circulated to the condensers and the temperature of the cooling water should be maintained near 0°C. The end caps of the sorbent cartridges should be placed in a clean screw-capped glass container during sample collection.

4.6 Leak-checking:

4.6.1 The train is leak-checked by closing the valve at the inlet to the first condenser and pulling a vacuum of 250 mm (10 in. Hg) above the normal operating pressure. The traps and condensers are isolated from the pump and the leak rate noted. The leak rate should be less than 2.5 mm Hg after 1 min. The train is then returned to atmospheric pressure by attaching a charcoal-filled tube to the train inlet and admitting ambient air filtered through the charcoal. This procedure will minimize contamination of the VOST components by excessive exposure to the fugitive emissions at hazardous waste incinerator sites.

4.7 Sample Collection

4.7.1 After leak-checking, sample collection is accomplished by opening the valve at the inlet to the first condenser, turning on the pump, and sampling at a rate of 1 liter/min for 20 min. The volume of sample for any pair of traps should not exceed 20 liters.

4.7.2 Following collection of 20 liters of sample, the train is leak-checked a second time at the highest pressure drop encountered during the run to minimize the chance of vacuum desorption of organics from the Tenax. The train is returned to atmospheric pressure, using the method discussed in Paragraph 4.1 and the two sorbent cartridges are removed. The end caps are replaced and the cartridges shall be placed in a suitable environment for storage and transport until analysis. The sample is considered invalid if the leak test does not meet specification.

4.7.3 A new pair of cartridges is placed in the VOST, the VOST leak-checked, and the sample collection process repeated as described above. Sample collection continues until six pairs of traps have been used.

4.7.4 All sample cartridges should be kept on cold packs until they are ready for analysis.

4.8 Blanks

4.8.1 Field blanks/trip blanks: Blank Tenax and Tenax/charcoal cartridges are taken to the sampling site and the end caps removed for the period of time required to exchange two pairs of traps on VOST. After the two VOST traps have been exchanged, the end caps are replaced on the blank Tenax and Tenax/charcoal tubes and these are returned to the cold packs and analyzed with the sample traps. At least one pair of field blanks (one Tenax, one Tenax/charcoal) shall be included with each six pairs of sample cartridges collected (or for each field trial using VOST to collect volatile POHCs).

4.8.2 **Trip blanks:** At least one pair of blank cartridges (one Tenax, one Tenax/charcoal) shall be included with shipment of cartridges to a hazardous waste incinerator site. These "field blanks" will be treated like any other cartridges except that the end caps will not be removed during storage at the site. This pair of traps will be analyzed to monitor potential contamination which may occur during storage and shipment.

4.8.3 **Laboratory blanks:** One pair of blank cartridges (one Tenax, one Tenax/charcoal) will remain in the laboratory using the method of storage which is used for field samples. If the field and trip blanks contain high concentrations of contaminants (e.g., greater than 2 ng of a particular POHC), the laboratory blank shall be analyzed in order to identify the source of contamination.

5.0 CALCULATIONS (for sample volume)

5.1 The following nomenclature are used in the calculation of sample volume:

P_{bar} = Barometric pressure at the exit orifice of the dry gas meter, mm (in.) Hg.

P_{std} = Standard absolute pressure, 760 mm (29.92 in.) Hg.

T_m = Dry gas meter average absolute temperature, K (°R).

T_{std} = Standard absolute temperature, 293K (528°R).

V_m = Dry gas volume measured by dry gas meter, dcm (dcf).

$V_{m(std)}$ = Dry gas volume measured by dry gas meter, corrected to standard conditions, dscm (dscf).

γ = Dry gas meter calibration factor.

5.2 The volume of gas sampled is calculated as follows:

$$V_{m(std)} = V_m \gamma \frac{T_{std}\ P_{bar}}{T_m\ P_{std}} = K_1 \gamma \frac{V_m\ P_{bar}}{T_m}$$

where:

K_1 = 0.3858 K/mm Hg for metric units, or

K_1 = 17.64 °R/in. Hg for English units.

6.0 ANALYTICAL PROCEDURE

See Method 5040.

7.0 PRECISION AND ACCURACY REQUIREMENTS

7.1 Method Performance Check

Prior to field operation of the VOST at a hazardous waste incinerator, a method performance check should be conducted using either selected volatile POHCs of interest or two or more of the volatile POHCs for which data are available. This check may be conducted on the entire system (VOST/GC/MS) by analysis of a gas cylinder containing POHCs of interest or on only the analytical system by spiking of the POHCs onto the traps. The results of this check for replicate pairs of traps should demonstrate that recovery of the analytes fall within 50% to 150% of the expected values.

7.2 Performance Audit

During a trial burn a performance audit must be completed. The audit results should agree within 50% to 150% of the expected value for each specific target compound. This audit consists of collecting a gas sample containing one or more POHCs in the VOST from an EPA ppb gas cylinder. Collection of the audit sample in the VOST may be conducted either in the laboratory or at the trial burn site. Anaysis of the VOST audit sample must be by the same person, at the same time, and with the same analytical procedure as used for the regular VOST trail burn samples. EPA ppb gas cylinders currently available for VOST Audit are shown in Table 1 below.

The audit procedure, audit equipment and audit cylinder may be obtained by writing:

Audit Cylinder Gas Coordinator (MD-77B)
Quality Assurance Division
Environmental Monitoring Systems Laboratory
U.S. Environmental Protection Agency
Research Triangle Park, NC 27711

or by calling the Audit Cylinder Gas Coordinator at (919) 541-4531.

The request for the audit must be made at least 30 days prior to the scheduled trial burn. If a POHC is selected for which EPA does not have an audit cylinder, this audit is not required.

8.0 REFERENCES

1. Protocol for the Collection and Analysis of Volatile POHCs Using VOST. EPA/600/8-84/007, March 1984.

2. Sykes, A.L., Standard Operating Procedure for Blanking Tenax and Tenax/Charcoal Sampling Cartridges for Volatile Organic Sampling Train (VOST), Radion Corporation, P.O. Box 13000, Research Triangle Park, NC 27709.

3. Validation of the Volatile Organic Sampling Train (VOST) Protocol, Vols. I and II, EPA/600/4-86/014a, January 1986.

TABLE 1: Organic Gases in the ppb Audit Repository

Group I	Ranges of cylinders currently available:
5 Organics in N_2:	7 - 90 ppb
Carbon tetrachloride	90 - 430 ppb
Chloroform	430 - 10,000 ppb
Perchloroethylene	
Vinyl chloride	
Benzene	

Group II	Ranges of cylinders currently available:
9 Organics in N_2	7 - 90 ppb
Trichloroethylene	90 - 430 ppb
1,2-Dichloroethane	
1,2-Dibromoethane	
F-12	
F-11	
Bromomethane	
Methyl ethyl ketone	
1,1,1-Trichloroethane	
Acetronitrile	

TABLE 1: Organic Gases in the ppb Audit Repository (Continued)

Group III	Ranges of cylinders currently available:
7 Organics in N_2:	7 - 90 ppb
Vinylidene chloride	90 - 430 ppb
F-113	
F-114	
Acetone	
1,4-Dioxane	
Toluene	
Chlorobenzene	

Group IV	Ranges of cylinders currently available:
6 Organics in N_2:	7 - 90 ppb
Acrylonitrile	430 - 10,000
1,3-Butadiene	
Ethylene oxide	
Methylene chloride	
Propylene oxide	
Ortho-xylene	

EPA DRAFT METALS METHOD

From Vol. VI of Guidance Series

United States
Environmental Protection
Agency

Office of Solid Waste
Washington DC 20460
NOVEMBER 1989

Hazardous Waste Incineration

EPA

PROPOSED METHODS FOR STACK EMISSIONS MEASUREMENT OF CO, O_2, THC, HCl, AND METALS AT HAZARDOUS WASTE INCINERATORS

VOLUME VI OF THE HAZARDOUS WASTE INCINERATION GUIDANCE SERIES

HAZARDOUS WASTE INCINERATION GUIDANCE SERIES

Volume I	Guidance Manual for Hazardous Waste Incinerator Permits, Mitre Corp., 1983. NTIS No. PB 84 100577.
Volume II	Guidance on Setting Permit Conditions and Reporting Trial Burn Results, EPA/625/6-89/019. USEPA, January 1989.
Volume III	Hazardous Waste Incineration Measurement Guidance Manual, EPA/625/6-89/021, USEPA, 1989.
Volume IV	Guidance on Metals and Hydrogen Chloride Controls for Hazardous Waste Incinerators, USEPA, August 1989.
Volume V	Guidance on PIC Controls for Hazardous Waste Incinerator, USEPA, April 1989.
Volume VI	Proposed Methods for Stack Emissions Measurement for CO, O_2, THC, HCl, and Metals at Hazardous Waste Incinerators, USEPA, November 1989.

NOTE: Volumes II and III are available from EPA, ORD, Cincinnati, Ohio 45268 (phone 513-569-7562) and Volumes IV through VI from EPA, OSW, Washington, DC 20460 (phone 202-382-3000).

DRAFT 8/28/89

METHODOLOGY FOR THE DETERMINATION OF METALS EMISSIONS IN EXHAUST GASES FROM HAZARDOUS WASTE INCINERATION AND SIMILAR COMBUSTION PROCESSES

1. Applicability and Principle

1.1 Applicability. This method is applicable for the determination of total chromium (Cr), cadmium (Cd), arsenic (As), nickel (Ni), manganese (Mn), beryllium (Be), copper (Cu), zinc (Zn), lead (Pb), selenium (Se), phosphorus (P), thallium (Tl), silver (Ag), antimony (Sb), barium (Ba), and mercury (Hg) emissions from hazardous waste incinerators and similar combustion processes. This method may also be used for the determination of particulate emissions following the additional procedures described. Modifications to the sample recovery and analysis procedures described in this protocol for the purpose of determining particulate emissions may potentially impact the front half mercury determination.*

1.2 Principle. The stack sample is withdrawn isokinetically from the source, with particulate emissions collected in the probe and on a heated filter and gaseous emissions collected in a series of chilled impingers containing a solution of dilute nitric acid in hydrogen peroxide in two impingers, and acidic potassium permanganate solution in two (or one) impingers. Sampling train components are recovered and digested in separate front and back half fractions. Materials collected in the sampling train are digested with acid solutions to dissolve inorganics and to remove organic constituents that may create analytical interferences. Acid digestion is performed using conventional Parr® Bomb or microwave digestion techniques. The nitric acid and hydrogen peroxide impinger solution, the acidic potassium permanganate impinger solution, and the probe rinse and digested filter solutions are analyzed for mercury by cold vapor atomic absorption spectroscopy (CVAAS). Except for the permanganate solution, the remainder of the sampling

---

*Field tests to date have shown that of the total amount of mercury measured by the method, only 0 to <2% was measured in the front half. Therefore, it is tentatively concluded, based on the above data, that particulate emissions may be measured by this train, without significantly altering the mercury results.

This document is a preliminary draft.
* has not been formally released by EPA
and should not at this stage be construed
to represent Agency policy. It is being
circulated for comment on its technical
accuracy and policy implications

This document is a preliminary draft.
It has not been formally released by EPA
and should not at this stage be construed
to represent Agency policy. It is being
circulated for comment on its technical
accuracy and policy implications.

train catches are analyzed for Cr, Cd, Ni, Mn, Be, Cu, Zn, Pb, Se, P, Tl, Ag, Sb, Ba, and As by inductively coupled argon plasma emission spectroscopy (ICAP) or atomic absorption spectroscopy (AAS). Graphite furnace atomic absorption spectroscopy (GFAAS) is used for analysis of antimony, arsenic, cadmium, lead, selenium, and thallium, if these elements require greater analytical sensitivity than can be obtained by ICAP. Additionally, if desired, the tester may use AAS for analyses of all metals if the resulting in-stack method detection limits meet the goal of the testing program. For convenience, aliquots of each digested sample fraction can be combined proportionally for a single analytical determination. The efficiency of the analytical procedure is quantified by the analysis of spiked quality control samples containing each of the target metals including actual sample matrix effects checks.

2. Range, Sensitivity, Precision, and Interferences

2.1 Range. For the analyses described in this methodology and for similar analyses, the ICAP response is linear over several orders of magnitude. Samples containing metal concentrations in the nanograms per milliliter (ng/ml) to micrograms per milliliter (ug/ml) range in the analytical finish solution can be analyzed using this technique. Samples containing greater than approximately 50 ug/ml of chromium, lead, or arsenic should be diluted to that level or lower for final analysis. Samples containing greater than approximately 20 ug/ml of cadmium should be diluted to that level before analysis.

2.2 Analytical Sensitivity. ICAP analytical detection limits for the sample solutions (based on SW-846, Method 6010) are approximately as follows: Sb (32 ng/ml), As (53 ng/ml), Ba (2 ng/ml), Be (0.3 ng/ml), Cd (4 ng/ml), Cr (7 ng/ml), Cu (6 ng/ml), Pb (42 ng/ml), Mn (2 ng/ml), Ni (15 ng/ml), P (75 ng/ml), Se (75 ng/ml), Ag (7 ng/ml), Ti (40 ng/ml), and Zn (2 ng/ml). The actual method detection limits are sample dependent and may vary as the sample matrix may affect the limits. The analytical detection limits for analysis by direct aspiration AAS (based on SW-846, Method 7000) are approximately as follows: Sb (200 ng/ml), As (2 ng/ml), Ba (100 ng/ml), Be (5 ng/ml), Cd (5 ng/ml), Cr (50 ng/ml), Cu (20 ng/ml), Pb (100 ng/ml), Mn (10 ng/ml), Ni (40 ng/ml), Se (2 ng/ml), Ag (10 ng/ml), Tl (100 ng/ml), and Zn (5 ng/ml). The detection limit for mercury by CVAAS is approximately 0.2 ng/ml. The use of GFAAS can give added sensitivity compared to the use of direct aspiration AAS for the

This document is a preliminary draft
It has not been formally released by EPA
and should not at this stage be construed
to represent Agency policy. It is being
circulated for comment on its technical
accuracy and policy implications.

following metals: Sb (3 ng/ml), As (1 ng/ml), Be (0.2 ng/ml), Cd (0.1 ng/ml), Cr (1 ng/ml), Pb (1 ng/ml), Se (2 ng/ml), and Tl (1 ng/ml).

Using (1) the procedures described in this method, (2) the analytical detection limits described in the previous paragraph, (3) a volume of 300 ml for the front half and 150 ml for the back half samples, and (4) a stack gas sample volume of 1.25 m^3, the corresponding in-stack method detection limits are presented in Table A-1 and calculated as shown:

$$\frac{A \times B}{C} = D$$

where: A = analytical detection limit, ug/ml.
B = volume of sample prior to aliquot for analysis, ml.
C = stack sample volume, dscm (dsm^3).
D = in-stack detection limit, ug/m^3.

Values in Table A-1 are calculated for the front and back half and/or the total train.

To ensure optimum sensitivity in obtaining the measurements, the concentrations of target metals in the solutions are suggested to be at least ten times the analytical detection limits. Under certain conditions, and with greater care in the analytical procedure, this concentration can be as low as approximately three times the analytical detection limit. In all cases, repetitive analyses, method of standard additions (MSA), serial dilution, or matrix spike addition should be used to establish the quality of the data.

Actual in-stack method detection limits will be determined based on actual source sampling parameters and analytical results as described above. If required, the method in-stack detection limits can be made more sensitive than those shown in Table A-1 for a specific test by using one or more of the following options:

- A normal 1-hour sampling run collects a stack gas sampling volume of about 1.25 m^3. If the sampling time is increased and 5 m^3 are collected, the in-stack method detection limits would be one fourth of the values shown in Table A-1 (this means that with this change, the method is four times more sensitive than normal).
- The in-stack detection limits assume that all of the sample is digested (with exception of the aliquot for mercury) and the final liquid volumes for analysis are 300 ml for the front half and 150 ml for the

This document is a preliminary draft. It has not been formally released by EPA and should not at this stage be construed to represent Agency policy. It is being circulated for comment on its technical accuracy and policy implications.

TABLE A-1. IN-STACK METHOD DETECTION LIMITS (ug/m^3)
FOR TRAIN FRACTIONS USING ICAP AND AAS

Metal	Front Half Fraction 1 Probe and Filter	Back Half$_1$ Fraction 2 Impingers 1-3	Back Half$_2$ Fraction 3 Impingers 4-5	Total Train
Antimony	7.7 (0.7)*	3.8 (0.4)*		11.5 (1.1)*
Arsenic	12.7 (0.3)*	6.4 (0.1)*		19.1 (0.4)*
Barium	0.5	0.3		0.8
Beryllium	0.07 (0.05)*	0.04 (0.03)*		0.11 (0.08)*
Cadmium	1.0 (0.02)*	0.5 (0.01)*		1.5 (0.03)*
Chromium	1.7 (0.2)*	0.8 (0.1)*		2.5 (0.3)*
Copper	1.4	0.7		2.1
Lead	10.1 (0.2)*	5.0 (0.1)*		15.1 (0.3)*
Manganese	0.5 (0.2)*	0.2 (0.1)*		0.7 (0.3)*
Mercury	0.05**	0.03**	0.03**	0.11**
Nickel	3.6	1.8		5.4
Phosphorus	18	9		27
Selenium	18 (0.5)*	9 (0.3)*		27 (0.8)*
Silver	1.7	0.9		2.6
Thallium	9.6 (0.2)*	4.8 (0.1)*		14.4 (0.3)*
Zinc	0.5	0.3		0.8

( )* Detection limit when analyzed by GFAAS.
** Detection limit when analyzed by CVAAS.
Actual method in-stack detection limits will be determined based on actual source sampling parameters and analytical results as described earlier in this section.

back half sample. If the front half volume is reduced from 300 ml to 30 ml, the front half in-stack detection limits would be one tenth of the values shown above (ten times more sensitive). If the back half volume is reduced from 150 ml to 25 ml, the in-stack detection limits would be one sixth of the above values. Matrix effects checks are necessary on analyses of samples and typically are of greater significance for samples that have been concentrated to less than the normal sample volume. A volume less than 25 ml may not allow resolubilization of the residue and may increase interference by other compounds.

- When both of the above two improvements are used on one sample at the same time, the resultant improvements are multiplicative. For example, where stack gas volume is increased by a factor of five and the total liquid sample digested volume of both the front and back halves is reduced by factor of six, the in-stack method detection limit is reduced by a factor of thirty (the method is thirty times more sensitive).

- Conversely, reducing stack gas sample volume and increasing sample liquid volume will increase limits. The front half and back half samples (Fractions 1 and 2) can be combined prior to analysis. The resultant liquid volume (excluding Fraction 3, which must be analyzed separately) is recorded. Combining the sample as described does not allow determination (whether front or back half) of where in the train the sample was captured. The in-stack method detection limit then becomes a single value for all metals except mercury, for which the contribution of Fraction 3 must be considered.
- The above discussion assumes no blank correction. Blank corrections are discussed later in this method.

2.3 Precision. The precisions (relative standard deviation) for each metal detected in a method development test at a sewage sludge incinerator, are as follows: Sb (12.7%), As (13.5%), Ba (20.6%), Cd (11.5%), Cr (11.2%), Cu (11.5%), Pb (11.6%), P (14.6%), Se (15.3%), Tl (12.3%), and Zn (11.8%). The precision for nickel was 7.7% for another test conducted at a source simulator. Beryllium, manganese and silver were not detected in the tests; however, based on the analytical sensitivity of the ICAP for these metals, it is assumed that their precisions should be similar to those for the other metals, when detected at similar levels.

2.4 Interferences. Iron can be a spectral interference during the analysis of arsenic, chromium, and cadmium by ICAP. Aluminum can be a spectral interference during the analysis of arsenic and lead by ICAP. Generally, these interferences can be reduced by diluting the sample, but this increases the method detection limit. Refer to EPA Method 6010 (SW-846) for details on potential interferences for this method. For all GFAAS analyses, matrix modifiers should be used to limit interferences, and standards should be matrix matched.

3. Apparatus

3.1 Sampling Train. A schematic of the sampling train is shown in Figure A-1. It is similar to the Method 5 train. The sampling train consists of the following components.

3.1.1 Probe Nozzle (Probe Tip) and Borosilicate or Quartz Glass Probe Liner. Same as Method 5, Sections 2.1.1 and 2.1.2. Glass nozzles are required unless an alternate probe tip prevents the possibility of contamination or

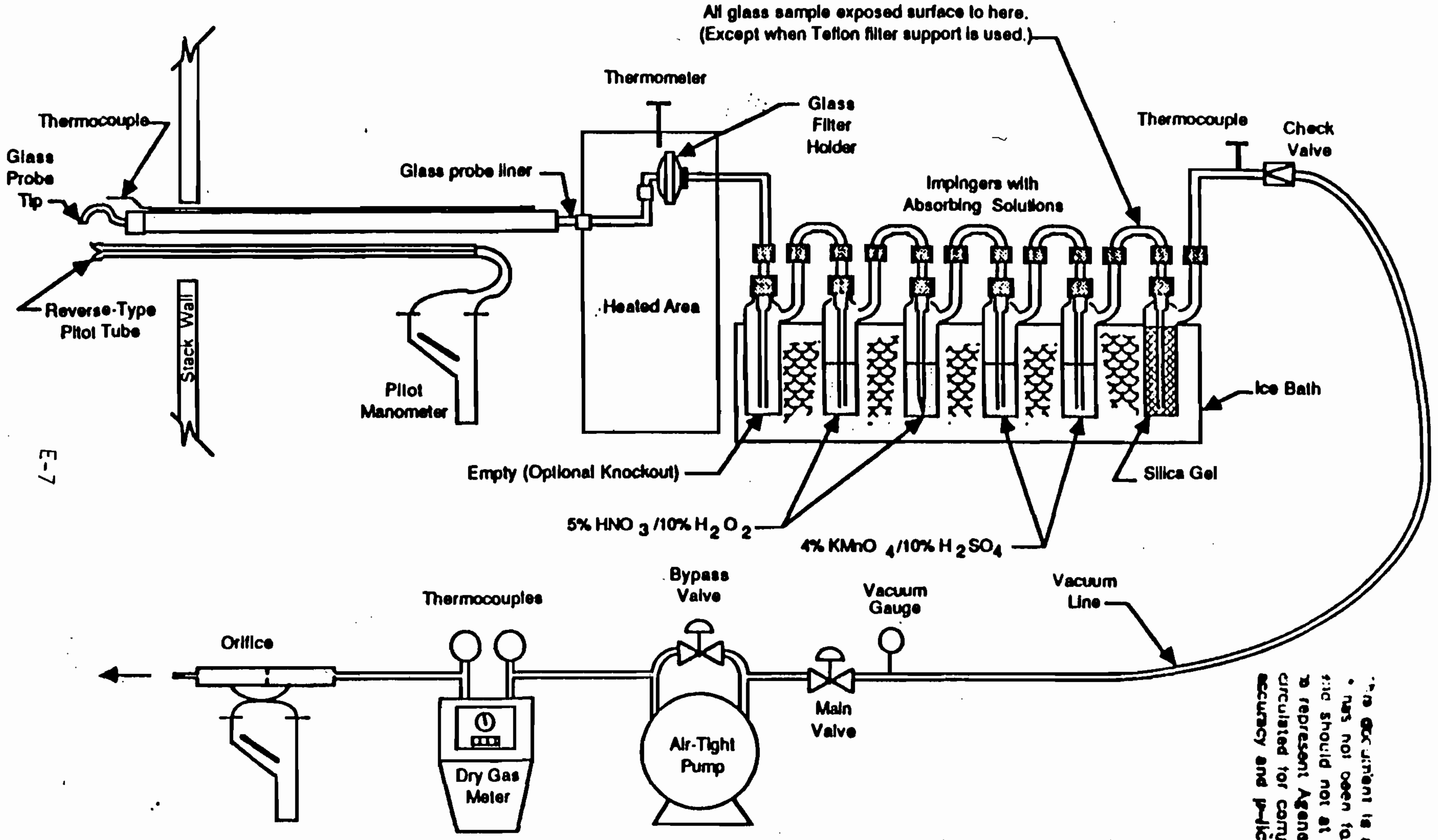

Figure A-1. Schematic of multiple metals sampling train.

4174 7/89

interference of the sample with its materials of construction. If a probe tip other than glass is used, no correction of the stack sample test results can be made because of the effect on the results by the probe tip.

3.1.2 Pitot Tube and Differential Pressure Gauge. Same as Method 2, Sections 2.1 and 2.2, respectively.

3.1.3 Filter Holder. Glass, same as Method 5, Section 2.1.5, except that a Teflon filter support must be used to replace the glass frit.

3.1.4 Filter Heating System. Same as Method 5, Section 2.1.6.

3.1.5 Condenser. The following system shall be used for the condensation and collection of gaseous metals and for determining the moisture content of the stack gas. The condensing system should consist of four to six impingers connected in series with leak-free ground glass fittings or other leak-free, non-contaminating fittings. The first impinger is optional and is recommended as a water knockout trap for use during test conditions which require such a trap. The impingers to be used in the metals train are now described. When the first impinger is used as a water knockout, it shall be appropriately-sized for an expected large moisture catch and constructed generally as described for the first impinger in Method 5, Paragraph 2.1.7. The second impinger (or the first HNO_3/H_2O_2 impinger) shall also be as described for the first impinger in Method 5. The third impinger (or the impinger used as the second HNO_3/H_2O_2 impinger) shall be the same as the Greenburg Smith impinger with the standard tip described as the second impinger in Method 5, Paragraph 2.1.7. All other impingers used in the metals train are the same as the second impinger (the first HNO_3/H_2O_2 impinger) previously described in this paragraph. In summary, the first impinger should be empty, the second and third shall contain known quantities of a nitric acid/hydrogen peroxide solution (Section 4.2.1), the fourth (and fifth, if required) shall contain a known quantity of acidic potassium permanganate solution (Section 4.2.2), and the last impinger shall contain a known quantity of silica gel or equivalent desiccant. A thermometer capable of measuring to within 1°C (2°F) shall be placed at the outlet of the last impinger. When the water knockout impinger is not needed, it is removed from the train and the other impingers remain the same. If mercury analysis is not needed, the potassium permanganate impingers are removed.

3.1.6 Metering System, Barometer, and Gas Density Determination Equipment. Same as Method 5, Sections 2.1.8 through 2.1.10, respectively.

3.1.7 Teflon Tape. For capping openings and sealing connections on the sampling train.

3.2 Sample Recovery. Same as Method 5, Sections 2.2.1 through 2.2.8 (Nonmetallic Probe-Liner and Probe-Nozzle Brushes, Wash Bottles, Sample Storage Containers, Petri Dishes, Glass Graduated Cylinder, Plastic Storage Containers, Funnel and Rubber Policeman, and Glass Funnel), respectively, with the following exceptions and additions:

3.2.1 Nonmetallic Probe-Liner and Probe-Nozzle Brushes. For quantitative recovery of materials collected in the front half of the sampling train. Description of acceptable all-Teflon component brushes to be included in EPA's Emission Measurement Technical Information Center (EMTIC) files.

3.2.2 Sample Storage Containers. Glass bottles with Teflon-lined caps, 1000- and 500-ml, shall be used for $KMnO_4$-containing samples and blanks. Polyethylene bottles may be used for other sample types.

3.2.3 Graduated Cylinder. Glass or equivalent.

3.2.4 Funnel. Glass or equivalent.

3.2.5 Labels. For identification of samples.

3.2.6 Polypropylene Tweezers and/or Plastic Gloves. For recovery of the filter from the sampling train filter holder.

3.3 Sample Preparation and Analysis. For the analysis, the following equipment is needed:

3.3.1 Volumetric Flasks, 100 ml, 250 ml, and 1000 ml. For preparation of standards and sample dilution.

3.3.2 Graduated Cylinders. For preparation of reagents.

3.3.3 Parr^{R} Bombs or Microwave Pressure Relief Vessels with Capping Station (CEM Corporation model or equivalent).

3.3.4 Beakers and Watchglasses. 250 ml beakers for sample digestion with watchglasses to cover the tops.

3.3.5 Ring Stands and Clamps. For securing equipment such as filtration apparatus.

3.3.6 Filter Funnels. For holding filter paper.

3.3.7 Whatman 541 Filter Paper (or equivalent). For filtration of digested samples.

3.3.8 Disposable Pasteur Pipets and Bulbs.

3.3.9 Volumetric Pipets.

3.3.10 Analytical Balance. Accurate to within 0.1 mg.

3.3.11 Microwave or Conventional Oven. For heating samples at fixed power levels or temperatures.

3.3.12 Hot Plates.

3.3.13 Atomic Absorption Spectrometer (AAS). Equipped with a background corrector.

3.3.13.1 Graphite Furnace Attachment. With antimony, arsenic, cadmium, lead, selenium, thallium, and hollow cathode lamps (HCLs) or electrodeless discharge lamps (EDLs). Same as EPA Methods 7041 (antimony), 7060 (arsenic), 7131 (cadmium), 7421 (lead), 7740 (selenium), and 7841 (thallium).

3.3.13.2 Cold Vapor Mercury Attachment. With a mercury HCL or EDL. The equipment needed for the cold vapor mercury attachment includes an air recirculation pump, a quartz cell, an aerator apparatus, and a heat lamp or desiccator tube. The heat lamp should be capable of raising the ambient temperature at the quartz cell by 10°C such that no condensation forms on the wall of the quartz cell. Same as EPA Method 7470.

3.3.14 Inductively Coupled Argon Plasma Spectrometer. With either a direct or sequential reader and an alumina torch. Same as EPA Method 6010.

4. Reagents

Unless otherwise indicated, it is intended that all reagents conform to the specifications established by the Committee on Analytical Reagents of the American Chemical Society, where such specifications are available; otherwise, use the best available grade.

4.1 Sampling. The reagents used in sampling are as follows:

4.1.1 Filters. The filters shall contain less than 1.3 ug/in.^{2} of each of the metals to be measured. Analytical results provided by filter manufacturers are acceptable. However, if no such results are available, filter blanks must be analyzed for each target metal prior to emission testing. Quartz fiber or glass fiber filters without organic binders shall be used. The filters should exhibit at least 99.95 percent efficiency (<0.05 percent penetration) on 0.3 micron dioctyl phthalate smoke particles. The filter efficiency test shall be conducted in accordance with ASTM Standard Method D2986-71 (incorporated by reference). For particulate determination in sources containing SO_2 or SO_3, the filter material must be of a type that is unreactive to SO_2 or SO_3, as described in EPA Method 5. Quartz fiber filters meeting these requirements are recommended.

4.1.2 Water. To conform to ASTM Specification D1193.77, Type II (incorporated by reference). Analyze the water for all target metals prior to field use. All target metals should be less than 1 ng/ml.

4.1.3 Nitric Acid. Concentrated. Baker Instra-analyzed or equivalent.

4.1.4 Hydrochloric Acid. Concentrated. Baker Instra-analyzed or equivalent.

4.1.5 Hydrogen Peroxide, 30 Percent (V/V).

4.1.6 Potassium Permanganate.

4.1.7 Sulfuric Acid. Concentrated.

4.1.8 Silica Gel and Crushed Ice. Same as Method 5, Sections 3.1.2 and 3.1.4, respectively.

4.2 Pretest Preparation for Sampling Reagents.

4.2.1 Nitric Acid (HNO_3)/Hydrogen Peroxide (H_2O_2) Absorbing Solution, 5 Percent HNO_3/10 Percent H_2O_2. Add 50 ml of concentrated HNO_3 and 333 ml of 30 percent H_2O_2 to a 1000-ml volumetric flask or graduated cylinder containing approximately 500 ml of water. Dilute to volume with water. The reagent shall contain less than 2 ng/ml of each target metal.

4.2.2 Acidic Potassium Permanganate ($KMnO_4$) Absorbing Solution, 4 Percent $KMnO_4$ (W/V). Prepare fresh daily. Dissolve 40 g of $KMnO_4$ in sufficient 10 percent H_2SO_4 to make 1 liter. Prepare and store in glass bottles to prevent degradation. The reagent shall contain less than 2 ng/ml of Hg.
Precaution: To prevent autocatalytic decomposition of the permanganate solution, filter the solution through Whatman 541 filter paper. Also, due to reaction of the potassium permanganate with the acid, there may be pressure buildup in the sample storage bottle; these bottles should not be fully filled and should be vented both to relieve excess pressure and prevent explosion due to pressure buildup. Venting is highly recommended, but should not allow contamination of the sample; a No. 70-72 hole drilled in the container cap and Teflon liner has been used.

4.2.3 Nitric Acid, 0.1 N. Add 6.3 ml of concentrated HNO_3 (70 percent) to a graduated cylinder containing approximately 900 ml of water. Dilute to 1000 ml with water. Mix well. The reagent shall contain less than 2 ng/ml of each target metal.

4.2.4 Hydrochloric Acid (HCl), 8 N. Add 690 ml of concentrated HCl to a graduated cylinder containing 250 ml of water. Dilute to 1000 ml with water. Mix well. The reagent shall contain less than 2 ng/ml of Hg.

4.3 Glassware Cleaning Reagents.

4.3.1 Nitric Acid, Concentrated. Fisher ACS grade or equivalent.

4.3.2 Water. To conform to ASTM Specifications D1193-77, Type II.

4.3.3 Nitric Acid, 10 Percent (V/V). Add 500 ml of concentrated HNO_3 to a graduated cylinder containing approximately 4000 ml of water. Dilute to 5000 ml with water.

4.4 Sample Digestion and Analysis Reagents.

4.4.1 Hydrochloric Acid, Concentrated.

4.4.2 Hydrofluoric Acid, Concentrated.

4.4.3 Nitric Acid, Concentrated. Baker Instra-analyzed or equivalent.

4.4.4 Nitric Acid, 10 Percent (V/V). Add 100 ml of concentrated HNO_3 to 800 ml of water. Dilute to 1000 ml with water. Mix well. Reagent shall contain less than 2 ng/ml of each target metal.

4.4.5 Nitric Acid, 5 Percent (V/V). Add 50 ml of concentrated HNO_3 to 800 ml of water. Dilute to 1000 ml with water. Reagent shall contain less than 2 ng/ml of each target metal.

4.4.6 Water. To conform to ASTM Specifications D1193-77, Type II.

4.4.7 Hydroxylamine Hydrochloride and Sodium Chloride Solution. See EPA Method 7470 for preparation.

4.4.8 Stannous Chloride.

4.4.9 Potassium Permanganate, 5 Percent (W/V).

4.4.10 Sulfuric Acid, Concentrated.

4.4.11 Nitric Acid, 50 Percent (V/V).

4.4.12 Potassium Persulfate, 5 Percent (W/V).

4.4.13 Nickel Nitrate, $Ni(NO_3)_2 \cdot 6H_2O$.

4.4.14 Lanthanum Oxide, La_2O_3.

4.4.15 AAS Grade Hg Standard, 1000 ug/ml.

4.4.16 AAS Grade Pb Standard, 1000 ug/ml.

4.4.17 AAS Grade As Standard, 1000 ug/ml.

4.4.18 AAS Grade Cd Standard, 1000 ug/ml.

4.4.19 AAS Grade Cr Standard, 1000 ug/ml.

4.4.20 AAS Grade Sb Standard, 1000 ug/ml.

4.4.21 AAS Grade Ba Standard, 1000 ug/ml.

4.4.22 AAS Grade Be Standard, 1000 ug/ml.

4.4.23 AAS Grade Cu Standard, 1000 ug/ml.

4.4.24 AAS Grade Mn Standard, 1000 ug/ml.

4.4.25 AAS Grade Ni Standard, 1000 ug/ml.
4.4.26 AAS Grade P Standard, 1000 ug/ml.
4.4.27 AAS Grade Se Standard, 1000 ug/ml.
4.4.28 AAS Grade Ag Standard, 1000 ug/ml.
4.4.29 AAS Grade Tl Standard, 1000 ug/ml.
4.4.30 AAS Grade Zn Standard, 1000 ug/ml.
4.4.31 AAS Grade Al Standard, 1000 ug/ml.
4.4.32 AAS Grade Fe Standard, 1000 ug/ml.

4.4.33 The metals standards may also be made from solid chemicals as described in EPA Method 200.7. EPA Method 7470 or <u>Standard Methods for the Analysis of Water and Wastewater</u>. 15th Edition, Method 303F should be referred to for additional information on mercury standards.

4.4.34 Mercury Standards and Quality Control Samples. Prepare fresh weekly a 10 ug/ml intermediate mercury standard by adding 5 ml of 1000 ug/ml mercury stock solution to a 500 ml volumetric flask; dilute to 500 ml by first adding 20 ml of 15 percent HNO_3 and then adding water. Prepare a working mercury standard solution fresh daily: add 5 ml of the 10 ug/ml intermediate standard to a 250 ml volumetric flask and dilute to 250 ml with 5 ml of 4 percent $KMnO_4$, 5 ml of 15 percent HNO_3, and then water. At least six separate aliquots of the working mercury standard solution should be used to prepare the standard curve. These aliquots should contain 0.0, 1.0, 2.0, 3.0, 4.0, and 5.0 ml of the working standard solution. Quality control samples should be prepared by making a separate 10 ug/ml standard and diluting until in the range of the calibration.

4.4.35 ICAP Standards and Quality Control Samples. Calibration standards for ICAP analysis can be combined into four different mixed standard solutions as shown below.

MIXED STANDARD SOLUTIONS FOR ICAP ANALYSIS

Solution	Elements
I	As, Be, Cd, Mn, Pb, Se, Zn
II	Ba, Cu, Fe
III	Al, Cr, Ni
IV	Ag, P, Sb, Tl

Prepare these standards by combining and diluting the appropriate volumes of the 1000 ug/ml solutions with 5 percent nitric acid. A minimum of one standard and a blank can be used to form each calibration curve. However, a separate quality control sample spiked with known amounts of the target metals in quantities in the midrange of the calibration curve should be prepared. Suggested standard levels are 50 ug/ml for Al, 25 ug/ml for Cr and Pb, 15 ug/ml for Fe, and 10 ug/ml for the remaining elements. Standards containing less than 1 ug/ml of metal should be prepared daily. Standards containing greater than 1 ug/ml of metal should be stable for a minimum of 1 to 2 weeks.

4.4.36 Graphite Furnace AAS Standards for Antimony, Arsenic, Cadmium, Lead, Selenium, and Thallium. Prepare a 10 ug/ml standard by adding 1 ml of 1000 ug/ml standard to a 100 ml volumetric flask. Dilute to 100 ml with 10 percent nitric acid. For graphite furnace AAS, the standards must be matrix matched; e.g., if the samples contain 6 percent nitric acid and 4 percent hydrofluoric acid, the standards should also be made up with 6 percent nitric acid and 4 percent hydrofluoric acid. Prepare a 100 ng/ml standard by adding 1 ml of the 10 ug/ml standard to a 100 ml volumetric flask and dilute to 100 ml with the appropriate matrix solution. Other standards should be prepared by dilution of the 100 ng/ml standards. At least five standards should be used to make up the standard curve. Suggested levels are 0, 10, 50, 75, and 100 ng/ml. Quality control samples should be prepared by making a separate 10 ug/ml standard and diluting until it is in the range of the samples. Standards containing less than 1 ug/ml of metal should be prepared daily. Standards containing greater than 1 ug/ml of metal should be stable for a minimum of 1 to 2 weeks.

4.4.37 Matrix Modifiers.

4.4.37.1 Nickel Nitrate, 1 Percent (V/V). Dissolve 4.956 g of $Ni(NO_3)_2 \cdot 6H_2O$ in approximately 50 ml of water in a 100 ml volumetric flask. Dilute to 100 ml with water.

4.4.37.2 Nickel Nitrate, One-tenth Percent (V/V). Dilute 10 ml of 1 percent nickel nitrate solution to 100 ml with water. Inject an equal amount of sample and this modifier into the graphite furnace during AAS analysis for As.

4.4.37.3 Lanthanum. Dissolve 0.5864 g of La_2O_3 in 10 ml of concentrated HNO_3 and dilute to 100 ml with water. Inject an equal amount of sample and this modifier into the graphite furnace during AAS analysis for Pb.

5. Procedure

5.1 Sampling. The complexity of this method is such that, to obtain reliable results, testers should be trained and experienced with the test procedures.

5.1.1 Pretest Preparation. Follow the same general procedure given in Method 5, Section 4.1.1, except that, unless particulate emissions are to be determined, the filter need not be desiccated or weighed. All sampling train glassware should first be rinsed with hot tap water and then washed in hot soapy water. Next, glassware should be rinsed three times with tap water, followed by three additional rinses with water. All glassware should then be soaked in a 10 percent (V/V) nitric acid solution for a minimum of 4 hours, rinsed three times with water, rinsed a final time with acetone, and allowed to air dry. All glassware openings where contamination can occur should be covered until the sampling train is assembled, prior to sampling.

5.1.2 Preliminary Determinations. Same as Method 5, Section 4.1.2.

5.1.3 Preparation of Sampling Train. Follow the same general procedures given in Method 5, Section 4.1.3, except place 100 ml of the nitric acid/hydrogen peroxide solution (Section 4.2.1) in the two HNO_3/H_2O_2 impingers (normally the second and third impingers), place 100 ml of the acidic potassium permanganate solution (Section 4.2.2) in the fourth and fifth impinger, and transfer approximately 200 to 300 g of preweighed silica gel from its container to the last impinger. Alternatively, the silica gel may be weighed directly in the impinger just prior to train assembly.

Several options are available to the tester based on the sampling conditions. The use of an empty first impinger can be eliminated if the moisture to be collected in the impingers is calculated or determined to be less than 150 ml. The tester shall include two impingers containing the acidic potassium permanganate solution for the first test run, unless past testing experience at the same or similar sources has shown that only one is necessary. The last permanganate impinger may be discarded if both permanganate impingers have retained their original deep purple permanganate color. A maximum of 200 ml in each permanganate impinger (and a maximum of three permanganate impingers) may be used, if necessary, to maintain the desired color in the last permanganate impinger.

Retain for reagent blanks, 100 ml of the nitric acid/hydrogen peroxide solution and 100 ml of the acidic potassium permanganate solution. These solutions should be labeled and treated as described in Section 7. Set up the sampling train as shown in Figure A-1. If necessary to ensure leak-free sampling train connections, Teflon tape should be used instead of silicone grease to prevent contamination.

Precaution: Extreme care should be taken to prevent contamination within the train. Prevent the mercury collection reagent (acidic potassium permanganate) from contacting any glassware of the train which is washed and analyzed for Mn. Prevent hydrogen peroxide from mixing with the acidic potassium permanganate.

5.1.4 Leak-Check Procedures. Follow the leak-check procedures given in Method 5, Section 4.1.4.1 (Pretest Leak-Check), Section 4.1.4.2 (Leak-Checks During the Sample Run), and Section 4.1.4.3 (Post-Test Leak-Checks).

5.1.5 Sampling Train Operation. Follow the procedures given in Method 5, Section 4.1.5. For each run, record the data required on a data sheet such as the one shown in Figure 5-2 of Method 5.

5.1.6 Calculation of Percent Isokinetic. Same as Method 5, Section 4.1.6.

5.2 Sample Recovery. Begin cleanup procedures as soon as the probe is removed from the stack at the end of a sampling period.

The probe should be allowed to cool prior to sample recovery. When it can be safely handled, wipe off all external particulate matter near the tip of the probe nozzle and place a rinsed, non-contaminating cap over the probe nozzle to prevent losing or gaining particulate matter. Do not cap the probe tip tightly while the sampling train is cooling. This normally causes a vacuum to form in the filter holder, thus causing the undesired result of drawing liquid from the impingers into the filter.

Before moving the sampling train to the cleanup site, remove the probe from the sampling train and cap the open outlet. Be careful not to lose any condensate that might be present. Cap the filter inlet where the probe was fastened. Remove the umbilical cord from the last impinger and cap the impinger. Cap off the filter holder outlet and impinger inlet. Use non-contaminating caps, whether ground-glass stoppers, plastic caps, serum caps, or Teflon tape to close these openings.

Alternatively, the train can be disassembled before the probe and filter holder/oven are completely cooled, if this procedure is followed: Initially disconnect the filter holder outlet/impinger inlet and loosely cap the open ends. Then disconnect the probe from the filter holder or cyclone inlet and loosely cap the open ends. Cap the probe tip and remove the umbilical cord as previously described.

Transfer the probe and filter-impinger assembly to a cleanup area that is clean and protected from the wind and other potential causes of contamination or loss of sample. Inspect the train before and during disassembly and note any abnormal conditions. The sample is recovered and treated as follows (see schematic in Figure A-2). Assure that all items necessary for recovery of the sample do not contaminate it.

5.2.1 Container No. 1 (Filter). Carefully remove the filter from the filter holder and place it in its identified petri dish container. Acid-washed polypropylene or Teflon coated tweezers or clean, disposable surgical gloves rinsed with water should be used to handle the filters. If it is necessary to fold the filter, make certain the particulate cake is inside the fold. Carefully transfer the filter and any particulate matter or filter fibers that adhere to the filter holder gasket to the petri dish by using a dry (acid-cleaned) nylon bristle brush. Do not use any metal-containing materials when recovering this train. Seal the labeled petri dish.

5.2.2 Container No. 2 (Acetone Rinse). Taking care to see that dust on the outside of the probe or other exterior surfaces does not get into the sample, quantitatively recover particulate matter and any condensate from the probe nozzle, probe fitting, probe liner, and front half of the filter holder by washing these components with 100 ml of acetone and placing the wash in a glass container. Note: The use of exactly 100 ml is necessary for the subsequent blank correction procedures. Distilled water may be used instead of acetone when approved by the Administrator and shall be used when specified by the Administrator; in these cases, save a water blank and follow the Administrator's directions on analysis. Perform the acetone rinses as follows: Carefully remove the probe nozzle and clean the inside surface by rinsing with acetone from a wash bottle and brushing with a nonmetallic brush. Brush until the acetone rinse shows no visible particles, after which make a final rinse of the inside surface with acetone.

Brush and rinse the inside parts of the Swagelok fitting with acetone in a similar way until no visible particles remain.

Rinse the probe liner with acetone by tilting and rotating the probe while squirting acetone into its upper end so that all inside surfaces will be wetted with acetone. Allow the acetone to drain from the lower end into the sample container. A funnel may be used to aid in transferring liquid washings to the container. Follow the acetone rinse with a nonmetallic probe brush. Hold the probe in an inclined position, squirt acetone into the upper end as the probe brush is being pushed with a twisting action through the probe; hold a sample

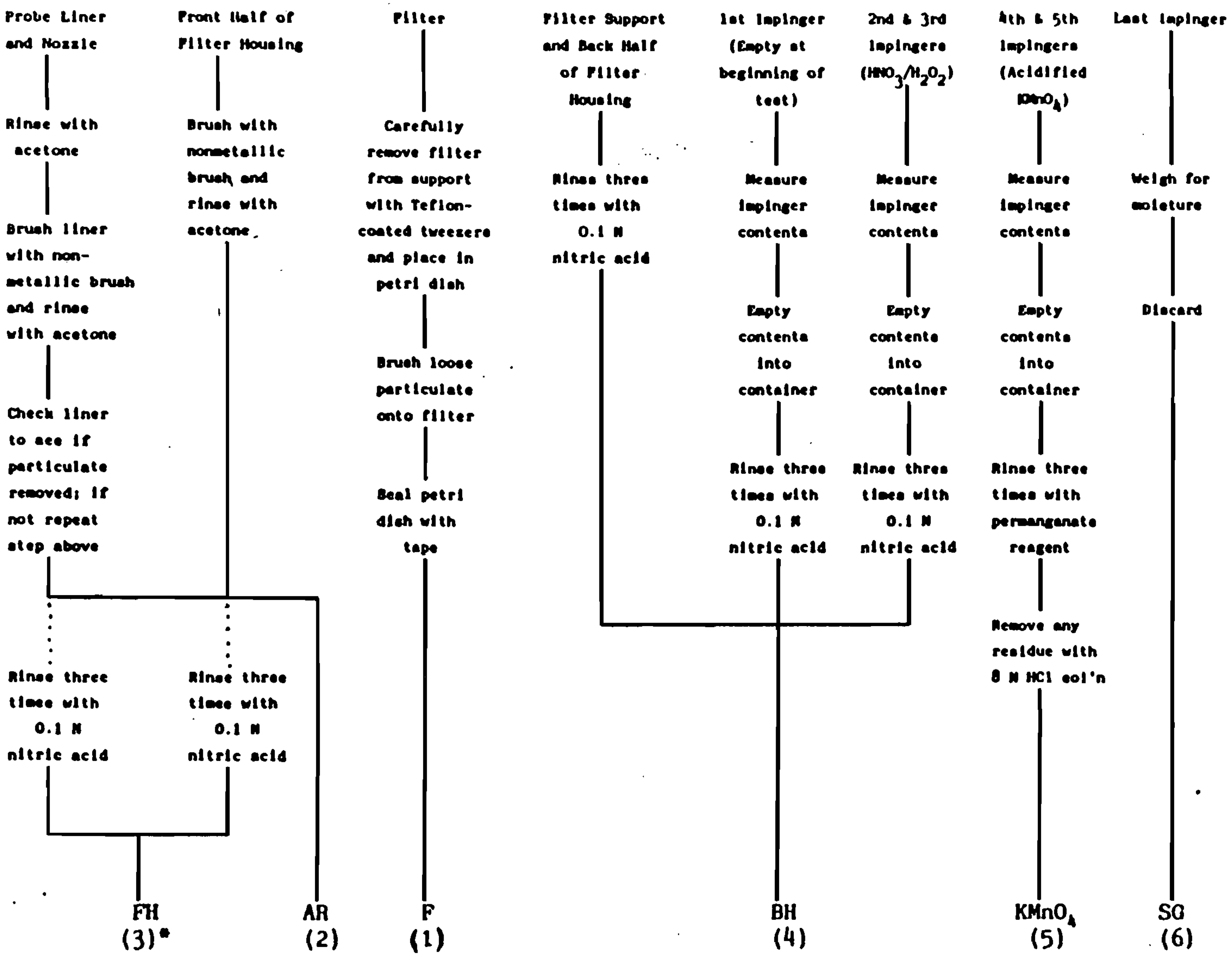

* Number in parantheses indicates container number.

Figure A-2. Sample recovery scheme.

container underneath the lower end of the probe, and catch any acetone and particulate matter which is brushed through the probe three times or more until no visible particulate matter is carried out with the acetone or until none remains in the probe liner on visual inspection. Rinse the brush with acetone, and quantitatively collect these washings in the sample container. After the brushing, make a final acetone rinse of the probe as described above.

It is recommended that two people clean the probe to minimize sample losses. Between sampling runs, keep brushes clean and protected from contamination.

Clean the inside of the front half of the filter holder by rubbing the surfaces with a nonmetallic nylon bristle brush and rinsing with acetone. Rinse each surface three times or more if needed to remove visible particulate. Make a final rinse of the brush and filter holder. After all acetone washings and particulate matter have been collected in the sample container, tighten the lid on the sample container so that acetone will not leak out when it is shipped to the laboratory. Mark the height of the fluid level to determine whether or not leakage occurred during transport. Label the container clearly to identify its contents.

5.2.3 Container No. 3 (Probe Rinse). Rinse the probe liner, probe nozzle, and front half of the filter holder thoroughly with 100 ml of 0.1 N nitric acid and place the wash into a sample storage container. Note: The use of exactly 100 ml is necessary for the subsequent blank correction procedures. Perform the rinses as described in Method 12, Section 5.2.2. Record the volume of the combined rinse. Mark the height of the fluid level on the outside of the storage container and use this mark to determine if leakage occurs during transport. Seal the container and clearly label the contents. Finally, rinse the nozzle, probe liner, and front half of the filter holder with water followed by acetone and discard these rinses.

5.2.4 Container No. 4 (Impingers 1 through 3, Contents and Rinses). Due to the large quantity of liquid involved, the tester may place the impinger solutions in more than one container. Measure the liquid in the first three impingers volumetrically to within 0.5 ml using a graduated cylinder. Record the volume of liquid present. This information is required to calculate the moisture content of the sampled flue gas. Clean each of the first three impingers, the filter support, the back half of the filter housing, and connecting glassware by thoroughly rinsing with 100 ml of 0.1 N nitric acid as described in Method 12, Section 5.2.4. Note: The use of exactly 100 ml of 0.1 N nitric acid rinse is necessary for the subsequent blank correction procedures. Combine the rinses and impinger solutions, measure and record the volume. Calculate the 0.1 N nitric acid rinse volume by difference. Mark the height of the fluid level on the outside of the container to determine if leakage occurs during transport. Seal the container and clearly label the contents.

5.2.5 Container No. 5 (Acidified Potassium Permanganate Solution and Rinses, Impingers No. 4 & 5). Pour all the liquid from the permanganate impingers (fourth and fifth, if two permanganate impingers are used) into a graduated cylinder and measure the volume to within 0.5 ml. This information is required to calculate the moisture content of the sampled flue gas. Using 100 ml total of the acidified potassium permanganate solution, rinse the permanganate impinger(s) and connecting glass pieces a minimum of three times. Combine the rinses with the permanganate impinger solution. Finally, rinse the permanganate impinger(s) and connecting glassware with 50 ml of 8 N HCl to remove any residue. Note: The use of exactly 100 ml and 50 ml for the two rinses is necessary for the subsequent blank correction procedures. Place the combined rinses and impinger contents in a labeled glass storage bottle. Mark the height of the fluid level on the outside of the bottle to determine if leakage occurs during transport. See the following note and the Precaution in Paragraph 4.2.2 and properly seal the bottle and clearly label the contents.

Note: Due to the potential reaction of the potassium permanganate with the acid, there may be pressure buildup in the sample storage bottles. These bottles should not be filled full and should be vented to relieve excess pressure. Venting is highly recommended. A No. 70-72 hole drilled in the container cap and Teflon liner has been found to allow adequate venting without loss of sample.

5.2.6 Container No. 6 (Silica Gel). Note the color of the indicating silica gel to determine whether it has been completely spent and make a notation of its condition. Transfer the silica gel from its impinger to its original container and seal. The tester may use a funnel to pour the silica gel and a rubber policeman to remove the silica gel from the impinger. The small amount of particles that may adhere to the impinger wall need not be removed. Do not use water or other liquids to transfer the silica gel since weight gained in the silica gel impinger is used for moisture calculations.

Alternatively, if a balance is available in the field, record the weight of the spent silica gel (or silica gel plus impinger) to the nearest 0.5 g.

5.2.7 Container No. 7 (Acetone Blank). Once during each field test, place 100 ml of the acetone used in the sample recovery process into a labeled container for use in the front half field reagent blank. Seal the container.

5.2.8 Container No. 8 (0.1 N Nitric Acid Blank). Once during each field test, place 200 ml of the 0.1 N nitric acid solution used in the sample recovery process into a labeled container for use in the front half and back half field reagent blanks. Seal the container.

5.2.9 Container No. 9 (5% Nitric Acid/10% Hydrogen Peroxide Blank). Once during each field test, place 200 ml of the 5% nitric acid/10% hydrogen peroxide solution used as the nitric acid impinger reagent into a labeled container for use in the back half field reagent blank. Seal the container.

5.2.10 Container No. 10 (Acidified Potassium Permanganate Blank). Once during each field test, place 300 ml of the acidified potassium permanganate solution used as the impinger solution and in the sample recovery process into a labeled container for use in the back half field reagent blank for mercury analysis. Seal the container.

Note: This container should be vented, as described in Section 5.2.4, to relieve excess pressure.

5.2.11 Container No. 11 (8 N HCl Blank). Once during each field test, place 50 ml of the 8 N hydrochloric acid used to rinse the acidified potassium permanganate impingers into a labeled container for use in the back half reagent blank for mercury.

5.2.12 Container No. 12 (Filter Blank). Once during each field test, place an unused filter from the same lot as the sampling filters in a labeled petri dish. Seal the petri dish. This will be used in the front half field reagent blank.

5.3 Sample Preparation. Note the level of the liquid in each of the containers and determine if any sample was lost during shipment. If a noticeable amount of leakage has occurred, either void the sample or use methods, subject to the approval of the Administrator, to correct the final results. A diagram illustrating sample preparation and analysis procedures for each of the sample train components is shown in Figure A-3.

5.3.1 Container No. 1 (Filter). If particulatre emissions are being determined, then desiccate the filter and filter catch without heat and weigh to

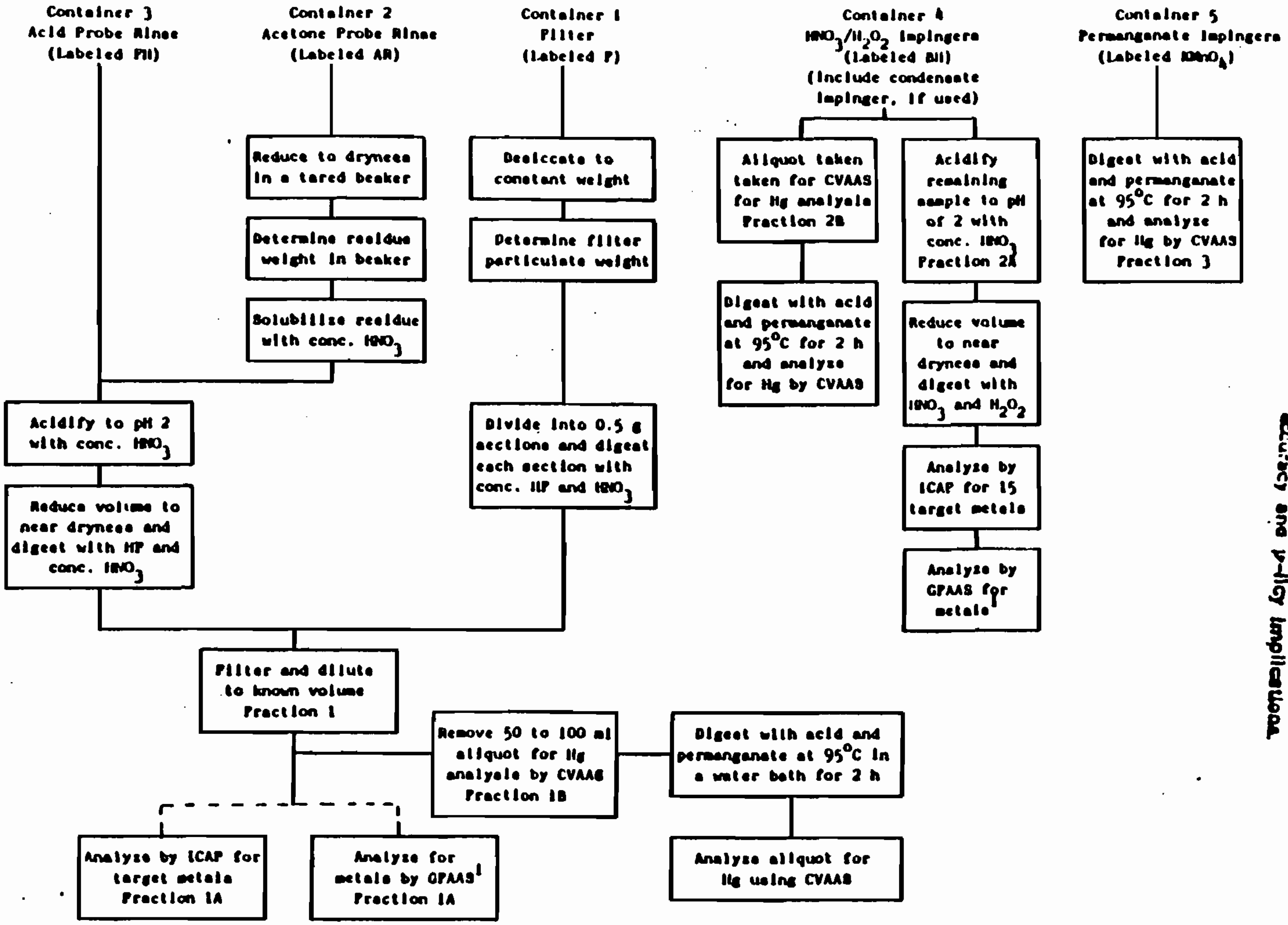

This document is a preliminary draft. It has not been formally released by EPA and should not at this stage be construed to represent Agency policy. It is being circulated for comment on its technical accuracy and policy implications.

[1] Analysis by AAS for metals found at less than 2 ug/ml in digestate solution, if desired. Or analyze for each metal by AAS, if desired.

Figure A-3. Sample preparation and analysis scheme.

a constant weight as described in Section 4.3 of Method 5. For analysis of metals, divide the filter with its filter catch into portions containing approximately 0.5 g each and place into the analyst's choice of either individual microwave pressure relief vessels or Parr® Bombs. Add 6 ml of concentrated nitric acid and 4 ml of concentrated hydrofluoric acid to each vessel. For microwave heating, microwave the sample vessels for approximately 12-15 minutes in intervals of 1 to 2 minutes at 600 Watts. For conventional heating, heat the Parr Bombs at 140°C (285°F) for 6 hours. Then cool the samples to room temperature and combine with the acid digested probe rinse as required in Section 5.3.3, below.

<u>Notes</u>: 1. Suggested microwave heating times are approximate and are dependent upon the number of samples being digested. Twelve to 15 minute heating times have been found to be acceptable for simultaneous digestion of up to 12 individual samples. Sufficient heating is evidenced by sorbent reflux within the vessel.

2. If the sampling train uses an optional cyclone, the cyclone catch should be prepared and digested using the same procedures described for the filters and combined with the digested filter samples.

5.3.2 Container No. 2 (Acetone Rinse). Note the level of liquid in the container and confirm on the analysis sheet whether or not leakage occurred during transport. If a noticeable amount of leakage has occurred, either void the sample or use methods, subject to the approval of the Administrator, to correct the final results. Measure the liquid in this container either volumetrically to ±1 ml or gravimetrically to ±0.5 g. Transfer the contents to an acid-cleaned tared 250-ml beaker and evaporate to dryness at ambient temperature and pressure. If particulate emissions are being determined, desiccate for 24 hours without heat, weigh to a constant weight according to the procedures described in Section 4.3 of Method 5, and report the results to the nearest 0.1 mg. Resolubilize the residue with concentrated nitric acid and combine the resultant sample including all liquid and any particulate matter with Container No. 3 prior to beginning the following Section 5.3.3.

5.3.3 Container No. 3 (Probe Rinse). The pH of this sample shall be 2 or lower. If the pH is higher, the sample should be acidified with concentrated nitric acid to pH 2. The sample should be rinsed into a beaker with water and the beaker should be covered with a ribbed watchglass. The sample volume should be reduced to approximately 50 ml by heating on a hot plate at a temperature just below boiling. Inspect the sample for visible particulate matter, and depending on the results of the inspection, perform one of the following. If no particulate matter is observed, combine the sample directly with the acid digested portions of the filter prepared previously in Section 5.3.1. If particulate matter is observed, digest the sample in microwave vessels or Parr^R Bombs following the procedures described in Section 5.3.1; then combine the resultant sample directly with the acid digested portions of the filter prepared previously in Section 5.3.1. The resultant combined sample is referred to as Fraction 1. Filter the combined solution of the acid digested filter and probe rinse samples using Whatman 541 filter paper. Dilute to 300 ml (or the appropriate volume for the expected metals concentration) with water. Measure and record the combined volume of the Fraction 1 solution to within 0.1 ml. Quantitatively remove a 50 ml aliquot and label as Fraction 1B. Label the remaining 250 ml portion as Fraction 1A. Fraction 1A is used for ICAP or AAS analysis. Fraction 1B is used for the determination of front half mercury.

5.3.4 Container No. 4 (Impingers 1-3). Measure and record the total volume of this sample (Fraction 2) to within 0.5 ml. Remove a 50 ml aliquot for mercury analysis and label as Fraction 2B. Label the remaining portion of Container No. 4 as Fraction 2A. The Fraction 2B aliquot should be prepared and analyzed as described in Section 5.4.3. Fraction 2A shall be pH 2 or lower. If necessary, use concentrated nitric acid to lower Fraction 2A to pH 2. The sample should be rinsed into a beaker with water and the beaker should be covered with a ribbed watchglass. The sample volume should be reduced to approximately 20 ml by heating on a hot plate at a temperature just below boiling. Then follow either of the digestion procedures described in Sections 5.3.4.1 and 5.3.4.2, below.

5.3.4.1 Conventional Digestion Procedure. Add 30 ml of 50 percent nitric acid and heat for 30 minutes on a hot plate to just below boiling. Add 10 ml of 3 percent hydrogen peroxide and heat for 10 more minutes. Add 50 ml of hot water and heat the sample for an additional 20 minutes. Cool, filter the sample, and dilute to 150 ml (or the appropriate volume for the expected metals concentrations) with water.

5.3.4.2 Microwave Digestion Procedure. Add 10 ml of 50 percent nitric acid and heat for 6 minutes in intervals of 1 to 2 minutes at 600 Watts. Allow the sample to cool. Add 10 ml of 3 percent hydrogen peroxide and heat for 2 more minutes. Add 50 ml of hot water and heat for an additional 5 minutes.

Cool, filter the sample, and dilute to 150 ml (or the appropriate volume for the expected metals concentrations) with water.

Note: All microwave heating times given are approximate and are dependent upon the number of samples being digested at a time. Heating times as given above have been found acceptable for simultaneous digestion of up to 12 individual samples. Sufficient heating is evidenced by solvent reflux within the vessel.

5.3.5 Container No. 5 (Impingers 4 & 5). Measure and record the total volume of this sample to within 0.5 ml. This sample is referred to as Fraction 3. Follow the analysis procedures described in Section 5.4.3.

5.3.6 Container No. 6 (Silica Gel). Weigh the spent silica gel (or silica gel plus impinger) to the nearest 0.5 g using a balance. (This step may be conducted in the field.)

5.4 Sample Analysis. For each sampling train, five individual samples are generated for analysis. A schematic identifying each sample and the prescribed sample preparation and analysis scheme is shown in Figure A-3. The first two samples, labeled Fractions 1A and 1B, consist of the digested samples from the front half of the train. Fraction 1A is for ICAP or AAS analysis as described in Sections 5.4.1 and/or 5.4.2. Fraction 1B is for determination of front half mercury as described in Section 5.4.3.

The back half of the train was used to prepare the third through fifth samples. The third and fourth samples, labeled Fractions 2A and 2B, contain the digested samples from the H_2O and HNO_3/H_2O_2 Impingers 1 through 3. Fraction 2A is for ICAP or AAS analysis. Fraction 2B will be analyzed for mercury.

The fifth sample, labeled Fraction 3, consists of the impinger contents and rinses from the permanganate Impingers 4 and 5. This sample is analyzed for mercury as described in Section 5.4.3. The total back half mercury catch is determined from the sum of Fraction 2B and Fraction 3.

5.4.1 ICAP Analysis. Fraction 1A and Fraction 2A are analyzed by ICAP using EPA Method 200.7 (40 CFR 136, Appendix C). Calibrate the ICAP, and set up an analysis program as described in Method 200.7. The quality control procedures described in Section 7.3.1 of this method shall be followed. Recommended wavelengths for use in the analysis are listed below.

Element	Wavelength (nm)
Aluminum	308.215
Antimony	206.833
Arsenic	193.696
Barium	455.403
Beryllium	313.042
Cadmium	226.502
Chromium	267.716
Copper	324.754
Iron	259.940
Lead	220.353
Manganese	257.610
Nickel	231.604
Selenium	196.026
Silver	328.068
Thallium	190.864
Zinc	213.856

The wavelengths listed are recommended because of their sensitivity and overall acceptance. Other wavelengths may be substituted if they can provide the needed sensitivity and are treated with the same corrective techniques for spectral interference.

Initially, analyze all samples for the target metals plus iron and aluminum. If iron and aluminum are present in the sample, the sample may have to be diluted so that each of these elements is at a concentration of less than 50 ppm to reduce their spectral interferences on arsenic and lead.

Note: When analyzing samples in a hydrofluoric acid matrix, an alumina torch should be used; since all front half samples will contain hydrofluoric acid, use an alumina torch.

5.4.2 AAS by Direct Aspiration and/or Graphite Furnace. If analysis of metals in Fraction 1A and Fraction 2A using graphite furnace or direct aspiration AAS is desired, Table A-2 should be used to determine which techniques and methods should be applied for each target metal. Table A-2 should also be consulted to determine possible interferences and techniques to be followed for their minimization. Calibrate the instrument according to Section 6.3 and follow the quality control procedures specified in Section 7.3.2.

5.4.3 Cold Vapor AAS Mercury Analysis. Fraction 1B, Fraction 2B, and Fraction 3 should be analyzed for mercury using cold vapor atomic absorption spectroscopy following the method outlined in EPA Method 7470 or in Standard Methods for Water and Wastewater Analysis, 15th Edition, Method 303F. Set up

TABLE A-2. APPLICABLE TECHNIQUES, METHODS, AND MINIMIZATION OF INTEFERENCE FOR AAS ANALYSIS

Metal	Technique	Method No.	Wavelength (nm)	Interference	
				Cause	Minimization
Sb	Aspiration	7040	217.6	1000 mg/ml Pb Ni, Cu, or acid	Use secondary wavelenght of 231.1 nm. Match sample & standards acid concentration or use nitrous oxide/acetylene flame
Sb	Furnace	7041	217.6	High Pb	Secondary wavelength or Zeeman correction
As	Furnace	7060	193.7	Arsenic volatization Aluminium	Spiked samples & add nickel nitrate solution to digestates prior to analyses Use Zeeman background correction
Ba	Aspiration	7080	553.6	Calcium Barium ionization	High hollow cathode current & narrow band set 2 mL of KCl per 100 mL of sample
Be	Aspiration	7090	234.9	500 ppm Al High Mg & Si	Add 0.1% flouride Use method of standard additions
Be	Furnace	7091	234.9	Be in optical path	Optimize parameters to miminize effects
Cd	Aspiration	7130	228.8	Absorption & light scattering	Background correction is required
Cd	Furnace	7131	228.8	As above Excess chloride Pipet tips	As above Ammonium phosphate used as a matrix modifier Use cadmium-free tips
Cr	Aspiration	7190	357.9	Alkali metal Absorption & scatt	KCl ionization suppressant in sample & stand Consult manufacturer's literature
Cr	Furnace	7191	357.9	200 mg/L calcium & phosphate	All calcium nitrate for a know constant effect and to eliminate effect of phosphate

(continued)

TABLE A-2 (CONTINUED)

Metal	Technique	Method No.	Wavelength (nm)	Interference Cause	Interference Minimization
Cu	Aspiration	7210	324.7	Absorpt & scatter	Consult manufacturer's manual
Fe	Aspiration	7380	248.3	Contamination	Great care taken to aviod contamination
Pb	Aspiration	7420	283.3	217.0 nm alternat	Background correction required
Pb	Furnace	7421	283.3	Poor recoveries	Matrix modifier, add 10 ul. of phosphorus acid to 1-mL of prepared sample in sampler cup
Mn	Aspiration	7460	279.5	403.1 nm alternat	Background correction required
Ni	Aspiration	7520	232.0	352.4 nm alternat	Background correction required
				Fe, Co, & Cr	Matrix matching or a nitrous-oxide/acety flame
				Nonlinear respons	Sample dilution or use 352.4 nm line
Se	Furnace	7740	196.0	Volitality	Spike samples & reference materials & add nickel nitrate to minimize volatilization
				Adsorpt & scatter	Background correction is required & Zeeman background correction can be useful
Ag	Aspiration	7760	328.1	Absorpt & scatter	Background correction is required
				AgCl insoluble	Avoid hydrochloric acid unless silver is in solution as a chloride complex
				Viscosity	Sample & standards monitored for apiration rate
Tl	Aspiration	7840	276.8		Background correction is required Hydrochloric acid should not be used
Tl	Furnace	7841	276.8		Background correction is required
				Hydrochloric acid or chloride	Verify that losses are not occuring for volitization by spiked samples or standad addt Palladium is a suitable matrix modifier
Zn	Aspiration	7950	213.9	High Si, Cu & P	Strontium removes Cu and phosphate
				Contamination	Care should be taken to avid contamination

the calibration curve as described in Section 7.3 of Method 303F. Add approximately 5 ml of each sample to BOD bottles. Record the amount of sample added. The amount used is dependent upon the expected levels of mercury. Dilute to approximately 120 ml with mercury-free water. Add approximately 15 ml of 5 percent potassium permanganate solution to the Fraction 2B and Fraction 3 samples. Add 5 percent potassium permanganate solution to the Fraction 1B sample as needed to produce a purple solution lasting at least 15 minutes. A minimum of 25 ml is suggested. Add 5 ml of 50 percent nitric acid, 5 ml of concentrated sulfuric acid, and 9 ml of 5 percent potassium persulfate to each sample and each standard. Digest the solution in the capped BOD bottle at 95°C (205°F) in a convection oven or water bath for 2 hours. Cool. Add 5 ml of hydroxylamine hydrochloride solution and mix the sample. Then add 7 ml of stannous chloride to each sample and analyze immediately.

6. Calibration

Maintain a laboratory log of all calibrations.

6.1 Sampling Train Calibration. Calibrate the sampling train components according to the indicated sections of Method 5: Probe Nozzle (Section 5.1); Pitot Tube (Section 5.2); Metering System (Section 5.3); Probe Heater (Section 5.4); Temperature Gauges (Section 5.5); Leak-Check of the Metering System (Section 5.6); and Barometer (Section 5.7).

6.2 Inductively Coupled Argon Plasma Spectrometer Calibration. Prepare standards as outlined in Section 4.4. Profile and calibrate the instrument according to the instrument manufacturer's recommended procedures using the above standards. The instrument calibration should be checked once per hour. If the instrument does not reproduce the concentrations of the standard within 10 percent, the complete calibration procedures should be performed.

6.3 Atomic Absorption Spectrometer - Direct Aspiration, Graphite Furnace and Cold Vapor Mercury Analyses. Prepare the standards as outlined in Section 4.4. Calibrate the spectrometer using these prepared standards. Calibration procedures are also outlined in the EPA methods referred to in Table A-2 and in Standard Methods for Water and Wastewater, 15th Edition, Method 303F (for mercury). Each standard curve should be run in duplicate and the mean values used to calculate the calibration line. The instrument should be recalibrated approximately once every 10 to 12 samples.

7. Quality Control

7.1 Sampling. Field Reagent Blanks. The blank samples in Container Numbers 7 through 12 produced previously in Sections 5.2.7 through 5.2.11, respectively, shall be processed, digested, and analyzed as follows. Digest and process Container No. 12 contents per Section 5.3.1, Container No. 7 per Section 5.3.2, and half of Container No. 8 per Section 5.3.3. This produces Fraction Blank 1A and Fraction Blank 1B from Fraction Blank 1. Combine the remaining half of Container No. 8 with the contents of Container No. 9 and digest and process the resultant volume per Section 5.3.4. This produces Fraction Blank 2A and Fraction Blank 2B from Fraction Blank 2. Container No. 10 and Container No. 11 contents are Fraction Blank 3. Analyze Fraction Blank 1A and Fraction Blank 2A per Section 5.4.1 and/or 5.4.2. Analyze Fraction Blank 1B, Fraction Blank 2B, and Fraction Blank 3 per Section 5.4.3. The analysis of Fraction Blank 1A produces the front half reagent blank correction values for the metals except mercury; the analysis of Fraction Blank 1B produces the front half reagent blank correct value for mercury. The analysis of Fraction Blank 2A produces the back half reagent blank correction values for the metals except mercury, while separate analysis of Fraction Blanks 2B and 3 produce the back half reagent blank correction value for mercury.

7.2 An attempt may be made to determine if the laboratory reagents used in Section 5.3 caused contamination. They should be analyzed by the procedures in Section 5.4. The Administrator will determine whether or not the laboratory blank reagent values can be used in the calculation of the stationary source test results.

7.3 Quality Control Samples. The following quality control samples should be analyzed.

7.3.1 ICAP Analysis. Follow the quality control shown in Section 8 of Method 6010. For the purposes of a three run test series, these requirements have been modified to include the following: two instrument check standard runs, two calibration blank runs, one interference check sample at the beginning of the analysis (must be within 25% or analyze by standard addition), one quality control sample to check the accuracy of the calibration standards (must be within 25% of calibration), and one duplicate analysis (must be within 5% of average or repeat all analysis).

7.3.2 Direct Aspiration and/or Graphite Furnace AAS Analysis for Antimony, Arsenic, Barium, Beryllium, Cadmium, Copper, Chromium, Lead, Nickel, Manganese, Mercury, Phosphorus, Selenium, Silver, Thallium, and Zinc. All samples should be analyzed in duplicate. Perform a matrix spike on one front half sample and one back half sample or one combined sample. If recoveries of less than 75 percent or greater than 125 percent are obtained for the matrix spike, analyze each sample by the method of additions. A quality control sample should be analyzed to check the accuracy of the calibration standards. The results must be within 10% or the calibration repeated.

7.3.3 Cold Vapor AAS Analysis for Mercury. All samples should be analyzed in duplicate. A quality control sample should be analyzed to check the accuracy of the calibration standards (within 10% or repeat calibration). Perform a matrix spike on one sample from the nitric impinger portion (must be within 25% or samples must be analyzed by the method of standard additions). Additional information on quality control can be obtained from EPA Method 7470 or in <u>Standard Methods for Water and Wastewater</u>, 15th Edition, Method 303F.

8. Calculations

8.1 Dry Gas Volume. Using the data from this test, calculate $V_{m(std)}$, the dry gas sample volume at standard conditions as outlined in Section 6.3 of Method 5.

8.2 Volume of Water Vapor and Moisture Content. Using the data obtained from this test, calculate the volume of water vapor $V_{w(std)}$ and the moisture content B_{ws} of the stack gas. Use Equations 5-2 and 5-3 of Method 5.

8.3 Stack Gas Velocity. Using the data from this test and Equation 2-9 of Method 2, calculate the average stack gas velocity.

8.4 Metals (Except Mercury) in Source Sample.

8.4.1 Fraction 1A, Front Half, Metals (except Hg). Calculate the amount of each metal collected in Fraction 1 of the sampling train using the following equation:

$$M_{fh} = C_a \, F_d \, V_{soln,1} \qquad \text{Eq. 1*}$$

---

*If Fractions 1A and 2A are combined, proportional aliquots must be used. Appropriate changes must be made in Equations 1-3 to reflect this approach.

where:

M_{fh} = total mass of each metal (except Hg) collected in the front half of the sampling train (Fraction 1), ug.
C_a = concentration of metal in sample Fraction 1A as read from the standard curve (ug/ml).
F_d = dilution factor (F_d = the inverse of the fractional portion of the concentrated sample in the solution actually used in the instrument to produce the reading C_a. For example, when the dilution of Fraction 1A is from 2 to 10 ml, F_d = 5).
$V_{soln,1}$ = total volume of digested sample solution (Fraction 1), ml.

8.4.2 Fraction 2A, Back Half, Metals (except Hg). Calculate the amount of each metal collected in Fraction 2 of the sampling train using the following equation.

$$M_{bh} = C_a \; F_a \; V_a \qquad \text{Eq. 2*}$$

where:

M_{bh} = total mass of each metal (except Hg) collected in the back half of the sampling train (Fraction 2), ug.
C_a = concentration of metal in sample Fraction 2A, as read from the standard curve (ug/ml).
F_a = aliquot factor, volume of Fraction 2 divided by volume of aliquot Fraction 2A.
V_a = volume of digested sample analyzed (concentrated Fraction 2A), ml.

8.4.3 Total Train, Metals (except Hg). Calculate the total amount of each of the quantified metals collected in the sampling train as follows:

$$M_t = (M_{fh} - M_{fhb}) + (M_{bh} - M_{bhb}) \qquad \text{Eq. 3*}$$

where:

M_t = total mass of each metal (separately stated for each metal) collected in the sampling train, ug.
M_{fhb} = blank correction value for mass of metal detected in front half field reagent blank, ug.
M_{bhb} = blank correction value for mass of metal detected in back half field reagent blank, ug.

---

*If Fractions 1A and 2A are combined, proportional aliquots must be used. Appropriate changes must be made in Equations 1-3 to reflect this approach.

Note: If the measured blank value for the front half (m_{fhb}) is in the range 0.0 to A ug [where A ug equals the value determined by multiplying 1.4 ug per square inch (1.4 ug/in.^{2}) times the actual area in square inches (in.^{2}) of the filter used in the emission sample], m_{fhb} may be used to correct the emission sample value (m_{fh}); if m_{fhb} exceeds A ug, the greater of the two following values (either I. or II.) may be used:

I. A ug, or

II. the lesser of (a) m_{fhb}, or (b) 5 percent of m_{fh}.

If the measured blank value for the back half (m_{bhb}) is in the range 0.0 to 1 ug, m_{bhb} may be used to correct the emission sample value (m_{bh}); if m_{bhb} exceeds 1 ug, the greater of the two following values may be used: 1 ug or 5 percent of m_{bh}.

8.5 Mercury in Source Sample.

8.5.1 Fraction 1B, Front Half, Hg. Calculate the amount of mercury collected in the front half, Fraction 1, of the sampling train using the following equation:

$$Hg_{fh} = \frac{Q_{fh}}{V_{f1B}} \times V_{soln,1} \qquad \text{Eq. 4}$$

where:

Hg_{fh} = total mass of mercury collected in the front half of the sampling train (Fraction 1), ug.

Q_{fh} = quantity of mercury in analyzed sample, ug.

$V_{soln,1}$ = total volume of digested sample solution (Fraction 1), ml.

V_{f1B} = volume of Fraction 1B analyzed, ml. See the following Note.

Note: V_{f1B} is the actual amount of Fraction 1B analyzed. For example, if 1 ml of Fraction 1B were diluted to 100 ml to bring it into the proper analytical range, and 1 ml of the 100 ml dilution was analyzed, V_{f1B} would be 0.01.

8.5.2 Fraction 2B and Fraction 3, Back Half, Hg. Calculate the amount of mercury collected in Fractions 2 and 3 using Equations 5 and 6, respectively. Calculate the total amount of mercury collected in the back half of the sampling train using Equation 7.

$$Hg_{bh2} = \frac{Q_{bh2}}{V_{f1B}} \times V_{soln,2} \qquad \text{Eq. 5}$$

where:

Hg_{bh2} = total mass of mercury collected in Fraction 2, ug.
Q_{bh2} = quantity of mercury in analyzed sample, ug.
V_{f2B} = volume of Fraction 2B analyzed, ml (see <u>Note</u> in Section 8.5.1).
$V_{soln.2}$ = total volume of Fraction 2, ml.

$$Hg_{bh3} = \frac{Q_{bh3}}{V_{f2B}} \times V_{soln.3} \qquad \text{Eq. 6}$$

where:

Hg_{bh3} = total mass of mercury collected in Fraction 3, ug.
Q_{bh3} = quantity of mercury in analyzed sample, ug.
V_{f3} = volume of Fraction 3 analyzed, ml (see <u>Note</u> in Section 8.5.1).
$V_{soln.3}$ = total volume of Fraction 3, ml.

$$Hg_{bh} = Hg_{bh2} + Hg_{bh3} \qquad \text{Eq. 7}$$

where:

Hg_{bh} = total mass of mercury collected in the back half of the sampling train, ug.

8.5.3 Total Train Mercury Catch. Calculate the total amount of mercury collected in the sampling train using Equation 8.

$$M_t = (Hg_{fh} - Hg_{fhb}) + (Hg_{bh} - Hg_{bhb}) \qquad \text{Eq. 8}$$

where:

M_t = total mass of mercury collected in the sampling train, ug.
Hg_{fhb} = blank correction value for mass of mercury detected in front half field reagent blank, ug.
Hg_{bhb} = blank correction value for mass of mercury detected in back half field reagent blank, ug.

<u>Note</u>: If the total of the measured blank values ($Hg_{fhb} + Hg_{bhb}$) is in the range of 0 to 3 ug, then the total may be used to correct the emission sample value ($Hg_{fh} + Hg_{bh}$); if it exceeds 3 ug, the greater of the following two values may be used: 3 ug or 5 percent of the emission sample value ($Hg_{fh} + Hg_{bh}$).

8.6 Metal Concentration of Stack Gas. Calculate the cadmium, total chromium, arsenic, nickel, manganese, beryllium, copper, lead, phosphorus, thallium, silver, barium, zinc, selenium, antimony, and mercury concentrations in the stack gas (dry basis, adjusted to standard conditions) as follows:

$$C_s = K_4 \; (M_t / V_{m(std)}) \qquad \text{Eq.9}$$

where:

C_s = concentration of each metal in the stack gas, mg/dscm.
K_4 = 10^{-3} mg/ug.
M_t = total mass of each metal collected in the sampling train, ug.
$V_{m(std)}$ = volume of gas sample as measured by the dry gas meter, corrected to dry standard conditions, dscm.

8.7 Isokinetic Variation and Acceptable Results. Same as Method 5, Sections 6.11 and 6.12, respectively.

9. Bibliography

9.1 Method 303F in Standard Methods for the Examination of Water Wastewater, 15th Edition, 1980. Available from the American Public Health Association, 1015 18th Street N.W., Washington, D.C. 20036.

9.2 EPA Methods 6010, 7000, 7041, 7060, 7131, 7421, 7470, 7740, and 7841, Test Methods for Evaluating Solid Waste: Physical/Chemical Methods. SW-846, Third Edition. September 1988. Office of Solid Waste and Emergency Response, U. S. Environmental Protection Agency, Washington, D.C. 20460.

9.3 EPA Method 200.7, Code of Federal Regulations, Title 40, Part 136, Appendix C. July 1, 1987.

9.4 EPA Methods 1 through 5, Code of Federal Regulations, Title 40, Part 60, Appendix A, July 1, 1987.

THIS SECTION HAS BEEN DELETED IN ITS ENTIRETY

FLORIDA FIRST PROCESSING - L.P.

ATTACHMENT D-6-4

CALCULATIONS OF INCINERATOR METALS GEED RATES AND WASTE FEED METALS CONCENTRATIONS FOR DESIGN OF TRIAL BURN TEST CONDITIONS

THIS SECTION HAS BEEN DELETED IN ITS ENTIRETY

FLORIDA FIRST PROCESSING - L.P.

ATTACHMENT D-6-5

EPA CORRESPONDENCE CONCENING COMMENTS ON TRIAL BURN TEST METHODS AND TIER III DISPPERSION MODELING FOR METALS EMISSIONS

ATTACHMENT D-6-6

QUALITY ASSURANCE PROJECT PLAN

Date: 10/15/90
Revision: 2

SECTION 1.0 TITLE PAGE AND PLAN APPROVALS

PROJECT TITLE: FLORIDA FIRST PROCESSORS, INC.
QUALITY ASSURANCE PROJECT PLAN (QAPP)

Approved by:

Contractor Principal	Date
Contractor Trial Burn Manager (Project Leader)	Date
Contractor Quality Assurance Coordinator	Date
Environmental Resources Manager (Facility-designated Final Signator)	Date

SECTION 2.0 TABLE OF CONTENTS

LIST OF FIGURES

LIST OF TABLES

SECTION 3.0 PROJECT DESCRIPTION

NOTE: This QAPP is preliminary. A revised plan will be submitted following selection of the trial burn sampling and analysis contractor.

3.1 GENERAL

FFPI will conduct a trial burn for the rotary kiln incinerator to be installed at its Polk County facility. The Trial Burn Plan and the QAPP will be amended as needed after system startup to reflect any significant changes determined to be necessary in facility operations or sampling, analysis and monitoring procedures. This QAPP was developed in accordance with "Interim Guidelines and Specifications for Preparing Quality Assurance Project Plans" (QAMS-005/80) and "Quality Assurance/Quality Control Procedures for Hazardous Waste Incineration" (EPA-625/6-89/023).

The proposed facility will consist of a rotary kiln incinerator, secondary combustion chamber (SCC) and air pollution control equipment (APCE). The incineration system will include equipment for storing, handling and feeding sludge, low-Btu liquid, bulk solids and containerized wastes to the kiln, and auxiliary fuel or high-Btu liquid to the kiln and SCC burners. The total design heat release will be 75 MM Btu/hr. The APCE also will include a spray dryer absorber (SDA) to cool the combustion gases and to remove HCl and SO_2, a fabric filter (baghouse) for particulate removal, two parallel induced draft (ID) fans and a stack. A detailed engineering description of the incinerator is included in Section D-7.

A summary of sampling and monitoring activities to be performed during the trial burn is presented in Table 3-1, 6-1, and 6-2. Samples to be collected during the test program include auxiliary fuel, liquid and solid waste feed materials, ash, dried solids, process water and stack gases. The sampling locations are identified in Drawing 8813-00-F-017.

Tests will be run at three separate sets of operating conditions. Each test will consist of three individual test runs of four hours each. Actual incinerator operation at test conditions will be longer in order to achieve steady-state conditions in the incinerator prior to initiating sampling.

Table 3-1
Summary of Process Monitoring During Trial Burn

Parameter	Location of Monitor	Type of Monitor	Operating Range	Permanent Recorder
Bulk Solids Weight	15A-crane/clamshell 15B-feed conveyor	Load Cells	0-3,000 lb 0-6,000 lb	Yes Yes
Containerized Waste Weight	16-automatic weigh sealant feed conveyor	Load Cells	0-1,000 lb	Yes
Fuel Oil Flow Rate	17A-line to burner on kiln 17B-line to burner on SCC	Mass Flowmeter	0-10 gpm 0-10 gpm	Yes
High-Btu Liquid Waste Feed Rate	18A-feed line to burner on kiln 18B-feed line to burner on SCC	Mass Flowmeter	0-10 gpm	Yes
Low-Btu Liquid Waste Feed Rate	19A-feed line to nozzle on kiln 19B-feed line to nozzle on SCC	Mass Flowmeter	0-15 gpm	Yes
Sludge Feed Rate	20-feed line to nozzle on kiln	Mass Flowmeter	0-15 gpm	Yes
Combustion Air	22A-air inlet duct to kiln 22B-air inlet duct to SCC	Thermal Dispersion Flowmeter	0-50,000 acfm 0-25,000 acfm	No
Rotary Kiln Pressure (Draft)	23 kiln outlet	Pressure Transducer	-2 to 1" wc	Yes
Rotary Kiln Speed	24-kiln rollers	Tachometer	0-1.5 rpm	No
Rotary Kiln Temperature	25-kiln outlet	Type-R Thermocouple	0-3,000°F	Yes
SCC Temperature	26-SCC outlet	Type-R Thermocouple	0-3,000°F	Yes
SCC Pressure (Draft)	27-SCC outlet	Pressure Transducer	-2 to 1" wc	No

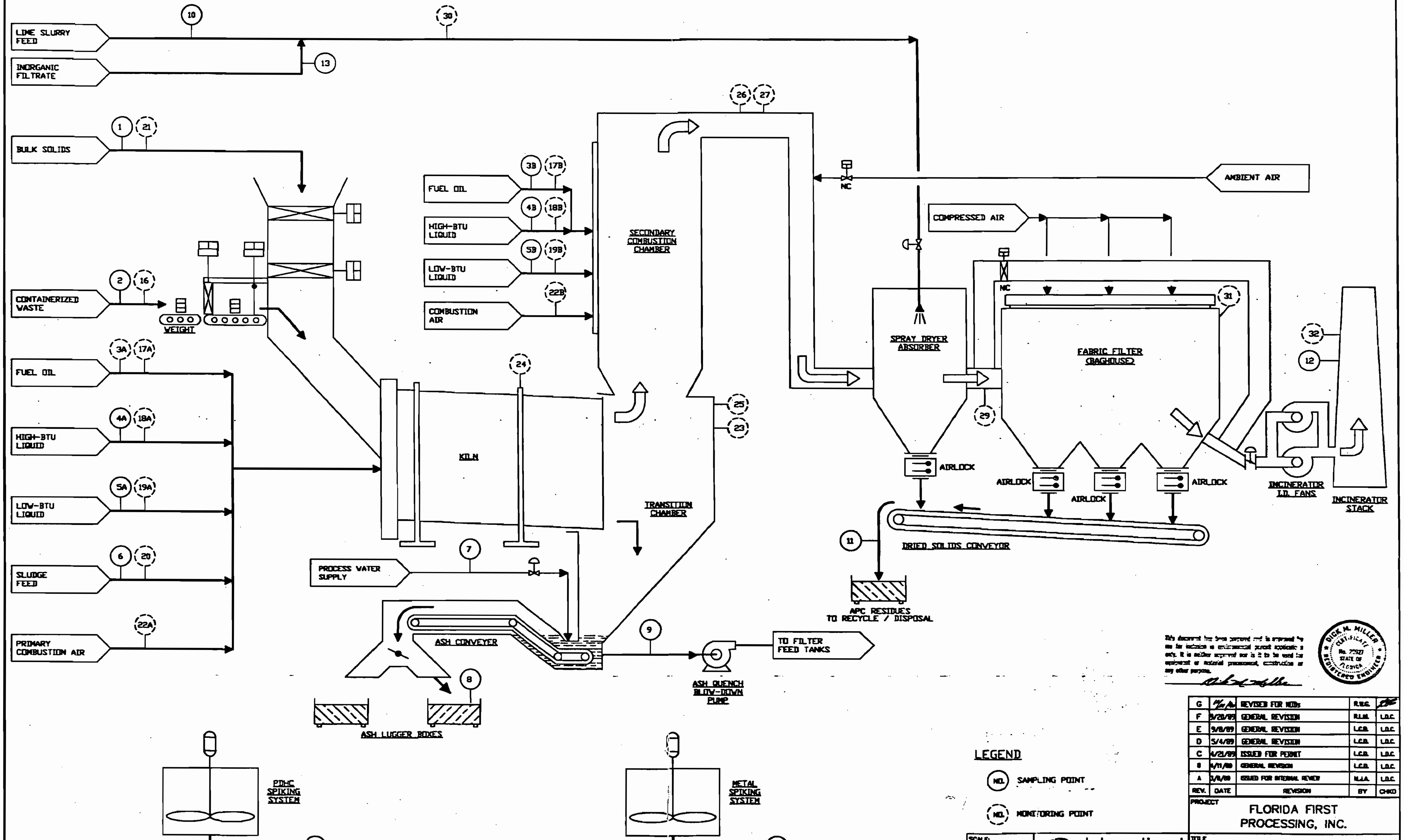

This document has been prepared and is approved by me for inclusion in environmental permit applications only. It is neither approved nor is it to be used for equipment or material procurement, construction or any other purpose.

Dick M. Miller

DICK M. MILLER
No. 7592?
STATE OF FLORIDA

REV.	DATE	REVISION	BY	CHKD
G	10/1/90	REVISED FOR NODs	R.W.G.	
F	9/20/89	GENERAL REVISION	R.L.M.	L.D.C.
E	9/8/89	GENERAL REVISION	L.C.B.	L.D.C.
D	5/4/89	GENERAL REVISION	L.C.B.	L.D.C.
C	4/21/89	ISSUED FOR PERMIT	L.C.B.	L.D.C.
B	4/11/89	GENERAL REVISION	L.C.B.	L.D.C.
A	3/8/89	ISSUED FOR INTERNAL REVIEW	M.J.A.	L.D.C.

PROJECT
FLORIDA FIRST
PROCESSING, INC.

SCALE:

International
WasteEnergy
Systems
ST. LOUIS, MO.

TITLE
TRIAL BURN
SAMPLING AND MONITORING
LOCATION
FLOWSHEET

DRAWN	DATE	APPD	DATE	DRAWING NO.	REV.
M.J.A.	11/22/88	CJK	10/1/90	8813-00-F-017	G
CHKD	DATE		DATE		

3.2 POHC SPIKING

The four selected POHCs, carbon tetrachloride (CCl_4), chlorobenzene (C_6H_5Cl), tetrochloroethylene (C_2Cl_4) and 1,2,4-trichlorobenzene, will be spiked into both containerized and pumpable waste feeds. The pumpable waste feed will be spiked by blending a 1:1:1:1 mixture of the four POHCs and feeding the mixture into the pumpable waste feed lines at approximately 5% to 10% by weight (each POHC ~ 2%) of the waste feedrate. The spiking system will be monitored using a rotameter during the trial burn tests. The total mass of POHCs fed to the incinerator will be determined gravimetrically, with the POHC mixture weighed before and after each run and with each refilling of the spike vessel.

The containerized waste feed will be spiked by blending a 1:1:1:1 mixture of the four POHCs into an absorbent material such as diatomaceous earth. One-gallon pails of this mixture will be inserted into each drum of containerized waste. The exact quantities of POHC mixture to be used will be determined based on the detection limits for each POHC and the absorbance demonstrated by the material.

3.3 METALS SPIKING

Metals testing will be performed during Test 2. Stack gases, process water, waste feed streams, auxiliary fuel, kiln ash and dried solids will be tested for Ag, As, Ba, Be, Cd, Cr, Hg, Pb, Sb and Tl (silver, arsenic, barium, beryllium, cadmium, chromium, mercury, lead, antimony and thallium). Inorganic salts for each of these 10 metals will be dissolved into an aqueous solution and spiked into the low-Btu liquid feed stream.

SECTION 4.0 PROJECT ORGANIZATION AND RESPONSIBILITIES

Figure 4-1 is an organization chart showing accountability and lines of communication. Responsibilities of key personnel on this project are as follows:

- Environmental Resources Manager (ERM)
  - Serving as facility responsible party for trial burn
  - Performing final approval of QAPP

- Trial Burn Contractor Principal
  - Serving as liaison with ERM
  - Performing overall review of QAPP for contractor

- Trial Burn Manager (Project Leader)
  - Serving as primary contact with facility and testing organization management
  - Daily logistics and planning
  - Meeting technical and fiscal requirements
  - Performing overall review of test data and completion of Trial Burn Report
  - Certifying that tests were completed as planned

- Quality Assurance Coordinator (QAC)
  - Planning and scheduling compliance audits
  - Submitting internal audit samples as required
  - Performing field audit during sampling
  - Performing systems audit during laboratory analyses
  - Reviewing draft test report and supporting data for completeness, QC acceptance, traceability and accuracy

- Field Crew Chief
  - Developing and monitoring project safety plan on site
  - Maintaining and calibrating test equipment
  - Ensuring capabilities of sampling crew
  - Documenting storage and integrity of collected samples
  - Recording field activities in project logbook

- Lab Analysis Coordinator
  - Ensuring care and integrity of samples received
  - Monitoring holding times for samples
  - Ensuring adherence to test plan and referenced methods
  - Performing QC checks and reporting QC results with test data
  - Maintaining and calibrating test equipment
  - Supervising analysts

Professional profiles of these key personnel will be submitted following selection of the trial burn sampling and analysis contractor.

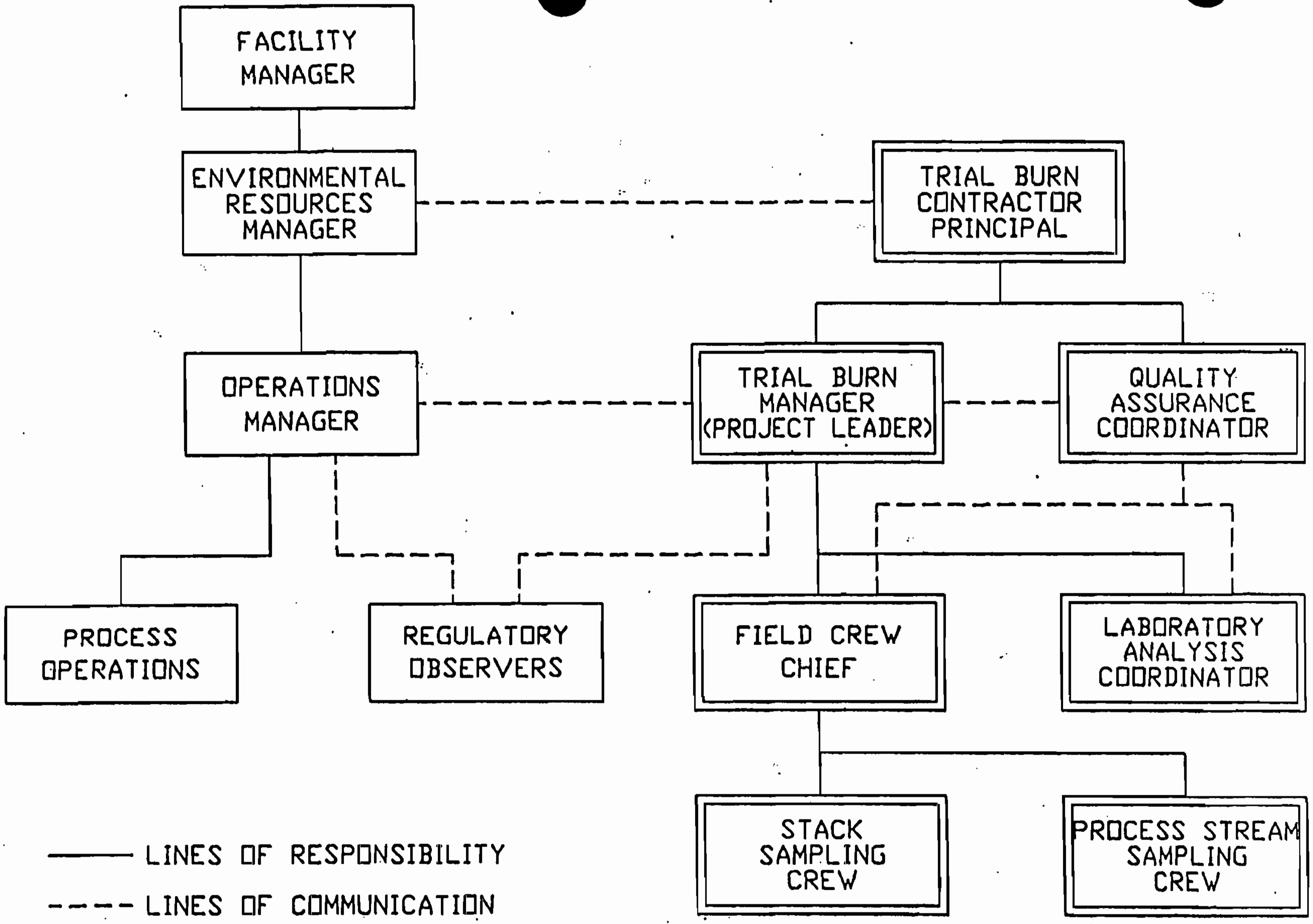

Figure 4-1 Organizational Chart for Conducting Trial Burn

SECTION 5.0 DATA QUALITY OBJECTIVES (DQOs) FOR MEASUREMENT DATA

5.1 GENERAL

The DQOs define acceptable levels of uncertainty that will be used to assess environmental data and demonstrate acceptable incinerator performance. This section describes the procedures and criteria which will be used to define data quality for the trial burn. DQOs for precision, accuracy and completeness are summarized in Table 5-1. Equations for calculating accuracy, precision and completeness are presented in Section 14.

5.2 DATA QUALITY TERMS

- **precision** The degree of similarity between repeated measurements of one property using the same method or technique.
- **accuracy** The degree of similarity between a measurement and an accepted reference or true value.
- **completeness** The percentage of data, verified to be within specified criteria, obtained from a measurement system compared to the amount expected to be obtained under normal circumstances.

  The overall objective for analytical data completeness will be 90%. Samples resulting from test runs which are judged to be invalid based on field indications will not be submitted to the laboratory for analysis.

Table 5-1
Data Quality Objectives

Parameter	Matrix	Test Condition	Accuracy	Precision	Completeness
Heating value	Auxiliary fuel Waste feed	Duplicate analysis of one sample from each matrix	–	±10% RPD	90%
		Analysis of reference standard	±10%	–	100%
POHCs	All feed and effluent streams	Duplicate analysis of one sample from each matrix	–	±30% RPD	90%
		Two spiked samples per matrix	±30%	–	90%
POHCs	Stack gas	Duplicate analysis of EPA audit cylinder	±50%	±30% RPD	90%
HCl	Stack gas	Duplicate matrix spikes	±10%	±10% RPD	90%
Total chlorine	All feeds and fuel	Duplicate analysis of one sample per matrix	–	±30% RPD	90%
		Analysis of synthetic standard	±10%	–	100%
Particulate	Stack emissions	Analysis of similar weights (Class S) mass standard prior and postweighing of samples	±2%	±2% RPD	100%
Ash	Auxiliary fuel Organic liquid feed Aqueous feed Containerized waste	Duplicate analysis of one sample from each matrix	–	10% RPD	90%
		Analysis of reference standard	±10%	–	100%

Parameter	Matrix	Test Condition	Accuracy	Precision	Completeness
Metals	All matrices tested	Duplicate preparation and analysis of spiked samples on blank matrix	±30%	±20% RPD	90%
CO	CEM - stack gas	Calibrated using EPA protocol 1 gases before and after test	±5%	±5% RPD	90%

5.3 DETECTION LIMITS

Sample results in which no target analytes are found will require method detection limits (MDLs) to be calculated and reported according to the following equation:

$$MDL = 9.92 \times S_C \times V_I$$

where:

MDL = Method detection limit for the target analyte

V_I = Dilution and unit conversion factor from sample preparation

S_C = The standard deviation of three replicate spiked samples at 3 x the estimated MDL

SECTION 6.0 SAMPLING PROCEDURES

The sampling procedures to be used in this program are described in detail in Section 3 of the Trial Burn Plan. See Attachment D-6-2 for standard stack gas sampling procedures. Tables 6-1 and 6-2 summarize the locations, frequency, method and amount of each sample to be collected during the trial burn.

Table 6-1
Process Stream Sampling and Analysis Scheme
For 3 Tests with 3 Runs Per Test

Sample Type/Location[1]	Sampling Method	Trial Burn Tests	Frequency of Sampling for Each Run[6]	Analysis[2]	Analytical Method
1. Bulk Solids Feed	Scoop (S007)	1 & 3	Two 100-g grab samples every hour composited into two samples at end of run	Composition[3] Heating Value Metals[4] POHCs	ASTM method D3176 ASTM D2015-85 SW-846 method 7000 SW-846 method 8010
2. Containerized Waste Feed	Scoop (S007)	1, 2 & 3	Sample during feed preparation	Composition[3] Heating Value Metals POHCs	ASTM method D3176 ASTM D2015-85 SW-846 method 7000 SW-846 method 8010
3. Fuel Oil	Tap (S004)[5]	1, 2 & 3	Two 100-ml grab samples and one 40-ml VOA vial every 15 minutes composited into three samples at end of run	Composition[3] Density Viscosity Heating Value Metals POHCs	ASTM method D3176 ASTM D-4052 ASTM D-88-81 ASTM D2015-85 SW-846 method 7000 SW-846 method 8010
4. High-Btu Liquid Feed	Tap (S004)[5]	1, 2 & 3	Two 100-ml grab samples and one 40-ml VOA vial every 15 minutes composited into three samples at end of run	Composition[3] Density Viscosity Heating Value Metals POHCs	ASTM method D3176 ASTM D-4052 ASTM D-88-81 ASTM D2015-85 SW-846 method 7000 SW-846 method 8010
5. Low-Btu Liquid Feed	Tap (S004)	1, 2 & 3	Two 100-ml grab samples and one 40-ml VOA vial every 15 minutes composited into three samples at end of run	Composition[3] Density Viscosity Heating Value Metals POHCs	ASTM method D3176 ASTM D-4052 ASTM D-88-81 ASTM D2015-85 SW-846 method 7000 SW-846 method 8010

1. See Drawing 8813-00-F-017.
2. Not including additional quality control analyses.
3. Composition includes C, H, O, N, S, Cl, F, ash and moisture.
4. Metals sampling and analysis will only be done for Test 2.
5. A003, S004 and S007 methods are from "Sampling Methods for Hazardous Waste Incinerators" first edition.
6. Only one grab sample will be needed for Test 1 and 3. Test 2 will require a second grab sample for metals.

Ta[illegible] 6-1
Process Stream Sampling and Analysis Scheme
For 3 Tests with 3 Runs Per Test (Cont.)

Sample Type/Location[1]	Sampling Method	Trial Burn Tests	Frequency of Sampling for Each Run[6]	Analysis[2]	Analytical Method
6. Sludge Feed	Tap (S004)	1, 2 & 3	Two 100-ml grab samples every 15 minutes composited into two samples at end of run	Composition[3] Density Viscosity Heating Value Metals POHCs	ASTM method D3176 ASTM D-4052 ASTM D-88-81 ASTM D2015-85 SW-846 method 7000 SW-846 method 8010
7. Process Water	Tap (S004)	1, 2 & 3	Two 100-ml grab samples and one 40-ml VOA vial every 60 minutes, composited into three samples at end of run	Total chloride Metals POHCs	A003 SW-846 method 7000 SW-846 method 8010
8. Rotary Kiln Ash	Scoop (S007)	1, 2 & 3	Two 100-g grab samples every hour composited into two samples at end of run	Metals POHCs	SW-846 method 7000 SW-846 method 8010
9. Ash Quench Blowdown	Tap (S004)	1, 2 & 3	Two 100-ml grab samples and one 40-ml VOA vial every 60 minutes composited into three samples at end of run	Total Chloride Metals POHCs	A003 SW-846 method 7000 SW-846 method 8010
10. Lime Slurry Feed	Tap (S004)	1, 2 & 3	Two 100-ml grab samples and one 40-ml VOA vial every 60 minutes composited into three samples at end of run	Total Chloride Metals POHCs	A003 SW-846 method 7000 SW-846 method 8010
11. Dried Solids	Scoop (S007)	1, 2 & 3	Two 100-g grab samples every hour composited into two samples at end of run	Metals POHCs	SW-846 method 7000 SW-846 method 8010
12. Stack Gas	See Table 6-2	1, 2 & 3	3-hr composite	See Table 6-2	See Table 6-2

1. See Drawing 8816-F-018.
2. Not including additional quality control analyses.
3. Composition includes C, H, O, N, S, Cl, F, ash and moisture.
4. Metals sampling and analysis will only be done for Test 2.
5. A003, S004 and S007 methods are from "Sampling Methods for Hazardous Waste Incinerators" first edition.
6. Only one grab sample will be needed for Test 1 and 3. Test 2 will require a second grab sample for metals.

T[illegible]e 6-1

Process Stream Sampling and Analysis Scheme For 3 Tests with 3 Runs Per Test (Cont.)

Sample Type/Location[1]	Sampling Method	Trial Burn Tests	Frequency of Sampling for Each Run[6]	Analysis[2]	Analytical Method
13. Inorganic Filtrate	Tap (S004)	1, 2 & 3	Two 100-ml grab samples and one 40-ml VOA vial every 60 minutes, composited into three samples at end of run	Total chloride Metals POHCs	A003 SW-846 method 7000 SW-846 method 8010
14. POHC Mixture	Tap (S004)	1, 2 & 3	One VOA vial per batch	POHC	SW-846 method 8010
15. Metals Solution	Tap (S004)	2	One 250-ml grab sample per batch	Metals	SW-846 method 7000

1. See Drawing 8816-F-018.
2. Not including additional quality control analyses.
3. Composition includes C, H, O, N, S, Cl, F, ash and moisture.
4. Metals sampling and analysis will only be done for Test 2.
5. A003, S004 and S007 methods are from "Sampling Methods for Hazardous Waste Incinerators" first edition.
6. Only one grab sample will be needed for Test 1 and 3. Test 2 will require a second grab sample for metals.

Table 6-2
Stack Sampling and Analysis Parameters For 3 Tests With 3 Runs Per Test[1]

Test Parameters	Sample Methods	No. of Samples Collected	Analyzed	Analytical Method
O_2 and CO_2	EPA M3	9	9	Orsat
CO	EPA Performance Specification	Continuous	Continuous	Continuous NDIR Emissions Monitor
Particulate/HCl	EPA M5-P	9	9	Gravimetric/Ion Chromatography
Metals[2]	Multiple Metal Method (M5-M)	3	3	SW-846-6010
Volatile POHCs	VOST (SW-846-0030)	12	9	SW-846-5040, 8240
Semivolatile POHC	M5-SV (SW-846-0010)	9	9	SW-846-8270
PCDD/PCDF[2]	M5-SV (SW-846-0010)	3	3	SW-846-8290
PCBs[2]	M5-SV (SW-846-0010)	3	3	SW-846-8080

---

[1] Blank samples are not included in this table.

[2] Metals, PCDD/PCDF and PCB analysis will only be done during Test 2.

SECTION 7.0 SAMPLE CUSTODY

This section describes general requirements for collection, preservation, identification, transfer, storage and disposition of samples. Figures 7-1 through 7-24 are forms used for documentation of sample collection and traceability:

7.1 FIELD MEASUREMENTS

In-situ measurements (e.g., temperature, flow and stack gas analysis) which are recorded directly in field logbooks, field data records, magnetic media or electronic computer data files will be secured and identified with the following information:

- Project number
- Station number
- Station location
- Date
- Time
- Sampler(s) signature

7.2 SAMPLE IDENTIFICATION

Samples will be identified by a sample tag or other appropriate identification. Figure 7-24 shows a typical sample tag or label. The following information or label will be recorded for each sample taken:

- Unique sample identifier
- Project number
- Station number
- Station description
- Type of sample (grab, composite, trap, etc.)
- Preservation used
- Analyses required
- Date collected (used for monitoring holding times)
- Time collected
- Sampler(s) signature
- Remarks (duplicate, blank or other relevant information)
- Any safety precautions

RUN NO. ____________
PROJECT NO. ____________
PLANT ____________
DATE ____________
SAMPLING LOCATION ____________
SAMPLE TYPE ____________
OPERATOR ____________
FILTER NO. ____________
RECORD DATA EVERY __ MIN.
UMBILICAL/SAMPLER HOOKUP __

PROBE NO. ____________
PROBE LENGTH AND TYPE ____________
SAMPLE BOX NO. ____________
METER BOX NO. ____________
TEMP. CONTROLLER NO. ____________
TEMP. METER NO. ____________
THERMOCOUPLE ID NO. ____________
UMBILICAL CORD ID NO. ____________
UMBILICAL CORD ID NO. ____________
NOZZLE NO. ____________

NOZZLE DIA. ____________
ASSUMED MOISTURE % ____________
METER Δ H ____________
METER CORRECTION ____________
PITOT NO. ____________
PITOT COEFFICIENT ____________
BAROMETRIC PRESSURE ____________
SITE TO BARO. ELEVATION (FT.) ____________
CORRECTED B.P. (0.1 IN/100 FT.) ____________
STATIC PRESSURE ____________

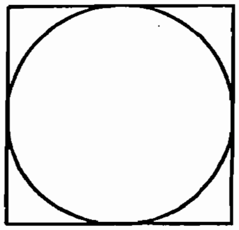

SCHEMATIC OF TRAVERSE POINT LAYOUT

PITOT LEAK CHECK ≥3" H_2O

	INITIAL	FINAL	INITIAL	FINAL	INITIAL	FINAL
TIME (24 hr)						
PASS/FAIL						

PITOT LEAK CHECK ≥3" H_2O

	INITIAL	FINAL	INITIAL	FINAL	INITIAL	FINAL
TIME (24 hr)						
PASS/FAIL						

SAMPLE TRAIN LEAK CHECKS

	INITIAL	FINAL	INITIAL	FINAL	INITIAL
TIME (24 hr)					
VACUUM, in. Hg.	≥15"		≥15"		≥15"
CFM					
VOLUMES					
FINAL					
INITIAL					
DIFFERENCE					

SAMPLE TRAIN LEAK CHECKS

	FINAL	INITIAL	FINAL	INITIAL	FINAL
TIME (24 hr)					
VACUUM, in. Hg.		≥15"		≥15"	
CFM					
VOLUMES					
FINAL					
INITIAL					
DIFFERENCE					

INITIAL VOLUME ____________
FINAL VOLUME ____________
LEAK CHECK VOLUME ____________
ADJUSTED FINAL VOLUME ____________

Figure 7-1 Field Data

RUN NO. ____________________
DATE ____________________

SAMPLING LOCATION ____________________
PROJECT NO. ____________________

P. ________ OF ________
OPERATOR ____________________

TRAVERSE POINT NUMBER	CLOCK TIME (24-hr) SAMPLING TIME, min	GAS METER READING (V_m), ft^3 INITIAL ________		VELOCITY HEAD (p), in. H_2O	ORIFICE PRESSURE DIFFERENTIAL (H), in H_2O		STACK TEMP. (T_s), °F	DRY GAS METER TEMPERATURE		PUMP VAC., in. Hg	IMPINGER TEMP. °F	SAMPLE BOX TEMP °F	PROBE TEMP. °F	FILTER TEMP. °F		
		DESIRED	ACTUAL		DESIRED	ACTUAL		INLET ($T_{m\,In}$), °F	OUTLET ($T_{m\,Out}$), °F							

COMMENTS:

Figure 7-2 Stack Emission Sampling

PLANT ____________________
DATE ____________________
SAMPLING LOCATION ____________________
INSIDE OF FAR WALL TO
OUTSIDE OF NIPPLE (DISTANCE A) ____________________
INSIDE OF NEAR WALL TO
OUTSIDE OF NIPPLE (DISTANCE B) ____________________
STACK ID (DISTANCE A - DISTANCE B) ____________________
NEAREST UPSTREAM DISTURBANCE ____________________
NEAREST DOWNSTREAM DISTURBANCE ____________________
CALCULATOR ____________________

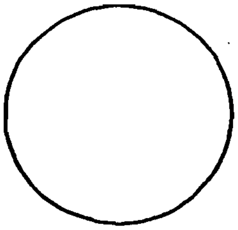

SCHEMATIC OF SAMPLING LOCATION

TRAVERSE POINT NUMBER	FRACTION OF STACK I.D.	STACK I.D.	PRODUCT OF COLUMNS 2 AND 3 (TO NEAREST 1/8 INCH)	DISTANCE B	TRAVERSE POINT LOCATION FROM OUTSIDE OF NIPPLE (SUM OF COLUMNS 4 & 5)

Figure 7-3 Traverse Point Location For Circular Ducts

Run No. ____________________

Project No. ____________________

Date ____________________

Plant ____________________

Barometric Pressure ____________________

Site to Baro. Elevation (ft) ____________________

Corrected B.P. (0.1 in/100 ft) ____________________

Rotameter Setting ____________________

Operator ____________________

Sample Location ____________________

VOST Unit I.D. ____________________

VOST Console Unit ____________________

Meter Correction ____________________

Probe Lk Ck: Initial P / F Final P / F

Console Lk Ck: Initial P / F Final P / F

Clock Time (24 hr)	Dry Gas Meter Reading (L)	Meter Temp °C	Probe Temp °C	Vacuum Pressure in. Hg	Tenax Temp °C	Tenax		Tenax/Charcoal		Train Leak Check
						Tube No.	Sample No.	Tube No.	Sample No.	

Comments:

	Tenax		Tenax/Charcoal	
Blank Tube I.D.	Tube No.	Sample No.	Tube No.	Sample No.
Field Bl				
Trip Bl				

Figure 7-4 VOST Data

Plant Project No.
Sampling Location Run No. Date
Sample Type (Multi-Point, Single-Point) Operator
Flow Control Device (Microvalve, Critical Orifice) Bag Type Sample No.
For Sampling From M5 Console No. Method 3 Train No.
Pump Type Pump Type
Pump I.D. Pump I.D.
Flow Meter Type Flow Meter Type
Flow Meter I.D. Flow Meter I.D.
Desired Flow Rate (cc/min)
Leak Check Before Sampling After Sampling
Total Sampling Time (min) Average Flow Meter Reading
Flow Rate (cc/min): Average Highest Lowest
Estimated Actual Volume (liters)

Time 24 Hr Clock	Flow Meter Reading	Comments

Figure 7-5 Integrated Gas Sampling Data Form for U.S. EPA Method 3

PLANT ____________________
DATE ____________________
LOCATION ____________________
STACK I.D. ____________________
BAROMETRIC PRESSURE IN HG ____________________
SITE TO BARO. ELEVATION (FT) ____________________
CORRECTED BARO. PRESSURE ____________________
TEMPERATURE METER NO. ____________________
THERMOCOUPLE I.D. NO. ____________________
PITOT ____________________
TIME (24 HR) ____________________
OPERATORS ____________________
STACK GAUGE PRESS (STATIC IN H_2O) ____________________
PITOT LEAK CHECK (AT $\geq 3''$ H_2O) ____________________

REMARKS:

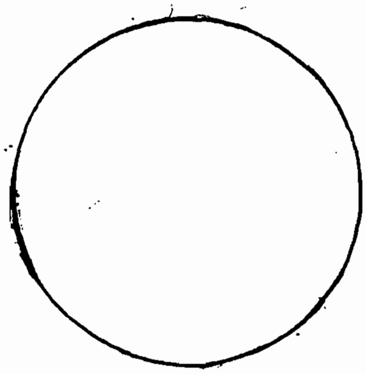
SCHEMATIC OF TRAVERSE POINT LAYOUT

TRAVERSE POINT NUMBER	VELOCITY HEAD ΔP IN H_2O	STACK TEMP T °F	CYCLONIC FLOW DET.	
			ΔP AT 0° REFERENCE	ANGLE (α) WHICH YIELDS A NULL ΔP
AVERAGES				

TRAVERSE POINT NUMBER	VELOCITY HEAD ΔP IN H_2O	STACK TEMP T °F	CYCLONIC FLOW DET.	
			ΔP AT 0° REFERENCE	ANGLE (α) WHICH YIELDS A NULL ΔP
AVERAGES				

Figure 7-6 Preliminary Velocity Traverse

PROJECT NO. ____________________ RUN NO. ____________________

SAMPLE NO. ____________________ DATE ____________________

PLANT SAMPLING LOCATION ____________________

ANALYSIS TIME (24 hr CLOCK) ____________________

SAMPLE TYPE (BAG, GRAB) ____________________

OPERATOR ____________________

ORSAT LEAK CHECK BEFORE ANALYSIS:

BURETTE ____________ CHANGE IN 4 MIN.

PIPETTES ____________ CHANGE IN 4 MIN.

ORSAT LEAK CHECK AFTER ANALYSIS:

BURETTE ____________ CHANGE IN 4 MIN.

PIPETTES ____________ CHANGE IN 4 MIN.

RUN	1		2		3		AVERAGE NET VOLUME
GAS	ACTUAL READING	NET	ACTUAL READING	NET	ACTUAL READING	NET	
CO_2	1 2 3		1 2 3		1 2 3		
O_2 (NET IS ACTUAL O_2 READING MINUS ACTUAL O_2 READING)	1 2 3		1 2 3		1 2 3		

Acceptance Criteria

$CO_2 > 4\%$ .3% by Volume
$\leq 4\%$ .2% by Volume

$O_2 \geq 15\%$ .2% by Volume
$< 15\%$ .3% by Volume

Comments:

Figure 7-7 O_2 and CO_2 by Orsat

Project No.
Client/ Plant:
Plant Location:
Source Tested:
Sampling Location:

Train used for:
Source Sample
Sampling Location Blank
Train Proof Blank
Spiked Source Sample

Sampling Train No.: Set up person:
Sample Box No.: / Set up date:
Set up for Run No.: Sample Box Leak Check: cfm @ inches Hg vacuum

Relinquished By: Received By: Date/Time: /

TRAIN COMPONENT	COMPONENT NO.	LOADING DATA		
			Initial Weights (grams)**	
			Empty	Loaded
Nozzle (316 Stainless Steel)	*			
Probe (Liner-Glass)	*			
Female Probe Blank-off				
Long 90° Connector (Bypass)	*			
Filter Holder Front		Filter Type:		
Filter Holder Back		Whatman QM-A		
Short 90° Connector				
Condenser				
Thermowell U-Connector				
XAD-2 Resin Cartridge		~75 grams		
U-Connector (A)		XAD-2 Resin		
1st Impinger (2-L Mod-GBS)	/	300 mLs		
U-Connector (B)		ASTM Type II Water		
2nd Impinger (GBS)	/	100 mLs		
U-Connector (C)		ASTM Type II Water		
3rd Impinger (Mod-GBS)	/	Empty		
U-Connector (D)				
4th Impinger (Mod-GBS)	/	~200 g indicating silica gel		
Impinger Outlet Connector				

* Nozzle tip covered with acetone/toluene-rinsed aluminum foil before and after sampling.
Probe liner outlet sealed with glass female blank-off before and after sampling.
Sample box inlet covered (not sealed) with aluminum foil after sampling.

** Include initial weights of additional components exchanged during run.
Cover all exchange component openings with acetone/toluene-rinsed aluminum foil.

Component changes after set up and before recovery - comments:

Figure 7-8 Modified Method 5-Semivolatile Organics Train (M5-SV) Field Laboratory Setup Data

Project No. ______________________

Client/ Plant: ______________________

Plant Location: ______________________

Source Tested: ______________________

Sampling Location: ______________________

Run No.: ____________ Sampling Train No.: ____________ Sample Box No.: ______/______

Train used for:
Source Sample
Sampling Location Blank
Train Proof Blank
Spiked Source Sample

Relinquished By: ____________ Received By: ____________ Date/Time: ______/______

Sample box recovery person: ______________________ Date: ________

Probe recovery persons: ______________________ Date: ________

BACK HALF RECOVERY

Impinger	XAD	1st	2nd	3rd	4th
Final Wt (g)	________	________	________	________	________
Initial Wt (g)	________	________	________	________	________
Net Wt (g)	________	________	________	________	________

(Total Condensate Collected (g): ______________)

Description and color:	________	________	________	________	____%Blue

	BACK HALF	XAD	CONDENSATE			
Sample Bottle			>>>>>>>>		<<<<<<<<<	Dispose of Properly
Tare Wt (g)	____		>>>>>>>>	________	<<<<<<<<<	
			>>>>>>>>		<<<<<<<<<	
Sample Number:	____	________	>>>>>>>>	________	<<<<<<<<<	

Sample Bottle Gross Wt (g) ________ Before Rinses

Rinse Solution: Acetone/Toluene*

Components Rinsed:
1 filter support,
1 filter holder back
1 90° connector,
1 condensor
1 thermowell connector

Sample Bottle Final Wt (g) ____

Net Sample Wt (g) ____

ASTM Type II Water, then Acetone/Toluene*
1st, 2nd, and 3rd impingers,
U-connectors A, B, C, and D

Sample Bottle Gross Wt (g) ________ After Water Rinses

________ After Acetone/Toluene Rinses

____

FRONT HALF RECOVERY

Components, nozzle, probe liner, 90° connector, filter holder front

Sample Bottle Tare Wt (g) ________

Sample Number: ________

Rinse Solution: Acetone/Toluene**

Sample Bottle Final Wt (g) ________

Net Sample Wt (g) ________

filter

____

Description and Color:

____

* Acetone rinses (3X) followed by toluene rinses (3X).

** Acetone rinses (3X or more) with brushing precede toluene rinses (3X) with brushing.

Fig. 7-9 Modified Method 5–Semivolatile Organics Train (M5-SV) Field Laboratory Recovery Data

Project No. ______________________

Client/ Plant: ______________________

Plant Location: ______________________

Source Tested: ______________________

Sampling Location: ______________________

Sampling Train No.: ______________ Set up person: ______________

Sample Box No.: ______ / ______ Set up date: ______________

Set up for Run No.: ______________ Sample Box Leak Check: __________ cfm @ __________ inches Hg vacuum

Train used for:
Source Sample
Sampling Location Blank
Train Proof Blank
Spiked Source Sample

Relinquished By: ______________ Received By: ______________ Date/Time: ______ / ______

TRAIN COMPONENT	COMPONENT NO.	LOADING DATA		
Nozzle (Quartz)	*			
Probe (Liner-Glass)	*			
Female Probe Blank-off		Filter Type:		
Long 90° Connector (Bypass)	*	Whatman QM-A	Initial Weights (grams)**	
Filter Holder Front		Filter Number:		
Filter Holder Back			Empty	Loaded
Special 45/90° Connector		______		
1st Impinger (2-L Mod-GBS)	/	Empty	______	
U-Connector (A)				
2nd Impinger (Mod-GBS)	/	100 mLs	______	______
U-Connector (B)		5% HNO_3/10% H_2O_2		
3rd Impinger (GBS)	/	100 mLs	______	______
U-Connector (C)		5% HNO_3/10% H_2O_2		
4th Impinger (Mod-GBS)	/	100 mLs	______	______
U-Connector (D)		acidic $KMnO_4$		
5th Impinger (Mod-GBS)	/	100 mLs***	______	______
U-Connector (E)		1.0 N NaOH		
6th Impinger (Mod-GBS)	/	~200 g indicating silica gel		______
Impinger Outlet Connector				

* Nozzle tip covered with parafilm before and after sampling.
Probe liner outlet sealed with glass female blank-off before and after sampling.
Sample box inlet covered (not sealed) with aluminum foil after sampling.

** Include initial weights of additional components exchanged during run.
Cover all exchange component openings with parafilm.

*** Used for acid trap and is not recovered as a sample. Replace with acidic $KMnO_4$ if the $KMnO_4$ in the previous impinger is exhausted before the end of a previous run.

Component changes after set up and before recovery - comments:

Figure 7-10 Modified Method 5–Multiple Metals Train (M5-M) Field Laboratory Setup Data

Project No. ____________________

Client/ Plant: ____________________

Plant Location: ____________________

Source Tested: ____________________

Sampling Location: ____________________

Run No.: ____________ Sampling Train No.: ____________ Sample Box No.: ______/______

Train used for:
Source Sample
Sampling Location Blank
Train Proof Blank
Spiked Source Sample

Relinquished By: ____________ Received By: ____________ Date/Time: ______/______

Sample box recovery person: ____________________ Date: ________

Probe recovery persons: ____________________ Date: ________

BACK HALF RECOVERY

Impinger	1st	2nd	3rd	4th	5th	6th
Final Wt (g)	________	________	________	________	________	________
	________	________	________	________	________	________
Initial Wt (g)	________	________	________	________	________	________
	________	________	________	________	________	________
Net Wt (g)	________	________	________	________	________	________

(Total Condensate Collected (g): ____________)

Description and color:	________	________	________	________	________	________ %Blue
Sample Bottle	>>>>>>>>		<<<<<<<<<		>Dispose of Property<	
Tare Wt (g)	* >>>>>>>>	________	<<<<<<<<<	________		
	>>>>>>>>		<<<<<<<<<			
Sample Number:	>>>>>>>>	________*	<<<<<<<<<	________*		
Sample Bottle Gross Wt (g)		________		________	Before Rinses	
Rinse Solution:	<————	0.1 N HNO_3	————>	acidic $KMnO_4$, then 8 N HCl		
Components Rinsed	| filter support, 1 filter holder back, 4th impinger, | 45/90° connector, 1st - 3rd impingers, U-connector (D) | & U-connectors A, B & C			pH:________	Before Rinses	
Check pH, must be ≤ 2**		pH:________		________	mLs 8 N HCl Added	
After adustement		pH:________		pH:________	After Rinses	
Sample Bottle Final Wt (g)		________		________		
Net Sample Wt (g)		________		________		

FRONT HALF RECOVERY ***

Components, nozzle, probe liner, 90° connector, filter holder front

			filter Description and Color:
Sample Bottle Tare Wt (g)	________	________	
			________________
Sample Number:	________	________	________
Rinse Solution:	Acetone****	0.1 N HNO_3	
Check pH ≤ 2 **	XXXXXXX	pH:________	
Sample Bottle Final Wt (g)	________	________	
Net Sample Wt (g)	________	________	

* Do not fill bottle; vent after recovery and before and after shipment.

** Check pH with a glass rod and pH indicator strips; adjust with 0.1 N HNO_3.

*** Acetone rinses (3X or more) with brushing precede acid rinses (3X) without brushing.

**** If acetone-insoluble material is collected in rinse flask and is difficult to remove, recover from flask with 0.1 N HNO_3 into acid rinse sample bottle.

Figure 7-11 Modified Method 5–Multiple Metals Train (M5-M) Field Laboratory Recovery Data

Run No. ______________________________

Date ______________________________

Project No. ______________________________

Plant ______________________________

Sampler ______________________________

Sample Method ______________________________

Composite ______________________________

Sample Numbers

Composite ______________________________

Compst Glb Lab ______________________________

Container No.	Sampled ✓	Container/Sample Weight[a]	Container Weight[b]	Net Weight

Comments:

Calibration Weights Comparison

50 lb ______ 100 lb ______ 150 lb ______

---

[a] After sample removed.

[b] Average of three containers.

Figure 7-12 Containerized Waste Feed Sampling and Weights

Run No. ______________________________

Date ______________________________

Project No. ______________________________

Plant ______________________________

Sampler ______________________________

Sample Location ______________________________

Sample Method ______________________________

Composite/VOA ______________________________

Sample Frequency (min) ______________________________

Sample Numbers

Composite ______________________________

Compst. Gib Lab ______________________________

No.	Start Time	Stop Time	VOA Sample No.	Interruptions/Comments
1				
2				
3				
4				
5				
6				
7				
8				
9				
10				
11				
12				
13				
14				
15				
16				
17				
18				
19				
20				
21				
22				
23				

Figure 7-13 High-Btu Liquid Waste Sampling

Run No. ____________________

Date ____________________

Project No. ____________________

Plant ____________________

Sampler ____________________

Sample Location ____________________

Sample Method ____________________

Composite/VOA ____________________

Sample Frequency (min) ____________________

Sample Numbers

Composite ____________________

Compst. Gib Lab ____________________

No.	Start Time	Stop Time	VOA Sample No.	Interruptions/Comments
1				
2				
3				
4				
5				
6				
7				
8				
9				
10				
11				
12				
13				
14				
15				
16				
17				
18				
19				
20				
21				
22				
23				

Figure 7-14 Low-Btu Liquid Waste Sampling

Run No. ______________________________

Date ______________________________

Project No. ______________________________

Plant ______________________________

Sampler ______________________________

Sample Location ______________________________

Sample Method ______________________________

Composite/VOA ______________________________

Sample Frequency (min) ______________________________

Sample Numbers

Composite ______________________________

Compst. Gib Lab ______________________________

No.	Start Time	Stop Time	VOA Sample No.	Interruptions/Comments
1				
2				
3				
4				
5				
6				
7				
8				
9				
10				
11				
12				
13				
14				
15				
16				
17				
18				
19				
20				
21				
22				
23				

Figure 7-15 Sludge Waste Sampling

Run No. ____________________

Date ____________________

Project No. ____________________

Plant ____________________

Sampler ____________________

Sample Location ____________________

Sample Method ____________________

Sample Numbers ____________________

VOA No. 1 ____________________

VOA No. 2 ____________________

Time	Comments

Figure 7-16 Bulk Solids Waste Sampling

Run No. ______________________ Plant ______________________

Date ______________________ Sampler ______________________

Project No. ______________________ Sample No. ______________________

Time	Comments

Figure 7-17 Fuel Oil Sampling

Run No. ______________________

Date ______________________

Project No. ______________________

Plant ______________________

Sampler ______________________

Sample Location ______________________

Sample Method ______________________

Sample Numbers ______________________

VOA No. 1 ______________________

VOA No. 2 ______________________

Time	Comments

Figure 7-18. Ash Sampling

Run No. ______________________ Plant ______________________

Date ______________________ Sampler ______________________

Project No. ______________________ Sample No. ______________________

Time	Comments

Figure 7-19 Dried Solids Sampling

Run No. ______________________________

Date ______________________________

Project No. ______________________________

Plant ______________________________

Sampler ______________________________

Sample Location ______________________________

Sample Method ______________________________

Composite/VOA ______________________________

Sample Frequency (min) ______________________________

Sample Numbers

Composite ______________________________

Compst. Glb Lab ______________________________

No.	Start Time	Stop Time	VOA Sample No.	Interruptions/Comments
1				
2				
3				
4				
5				
6				
7				
8				
9				
10				
11				
12				
13				
14				
15				
16				
17				
18				
19				
20				
21				
22				
23				

Figure 7-20 Inorganic Filtrate Sampling

Run No. ____________________

Date ____________________

Project No. ____________________

Plant ____________________

Sampler ____________________

Sample Location ____________________

Sample Method ____________________

Composite/VOA ____________________

Sample Frequency (min) ____________________

Sample Numbers

Composite ____________________

Compst. G/b Lab ____________________

No.	Start Time	Stop Time	VOA Sample No.	Interruptions/Comments
1				
2				
3				
4				
5				
6				
7				
8				
9				
10				
11				
12				
13				
14				
15				
16				
17				
18				
19				
20				
21				
22				
23				

Figure 7-21 Process Water Sampling

PROJECT NO.	PROJECT NAME	NAME OF FACILITY
SAMPLERS *(Signature)*		FACILITY LOCATION

STA NO	DATE	TIME	NO. OF CONTAINERS	TAG NUMBERS	STATION DESCRIPTION	ANALYSIS REQUEST OR REMARKS

Transferred by *(Signature)*		Received by *(Signature)*		Telephone
Date	Time	Title	Date	Time

Figure 7-22 Transfer of Samples

PROJECT NUMBER:

REQUESTER:

PROJECT NAME:

LOCATION:

OBJECTIVE(S) OF INVESTIGATION:

SAMPLES:

ESTIMATED NO.:

TYPE:

FIELD PERSONNEL:

DATE(S) OF SAMPLING:

BACKGROUND INFORMATION:

FACILITY/SOURCE:

SOURCE OF SAMPLES:

PARAMETERS OF INTEREST:

PAST DATA:

TIME CONSTRAINTS:

Figure 7-23 Identification of Analytical Requirements

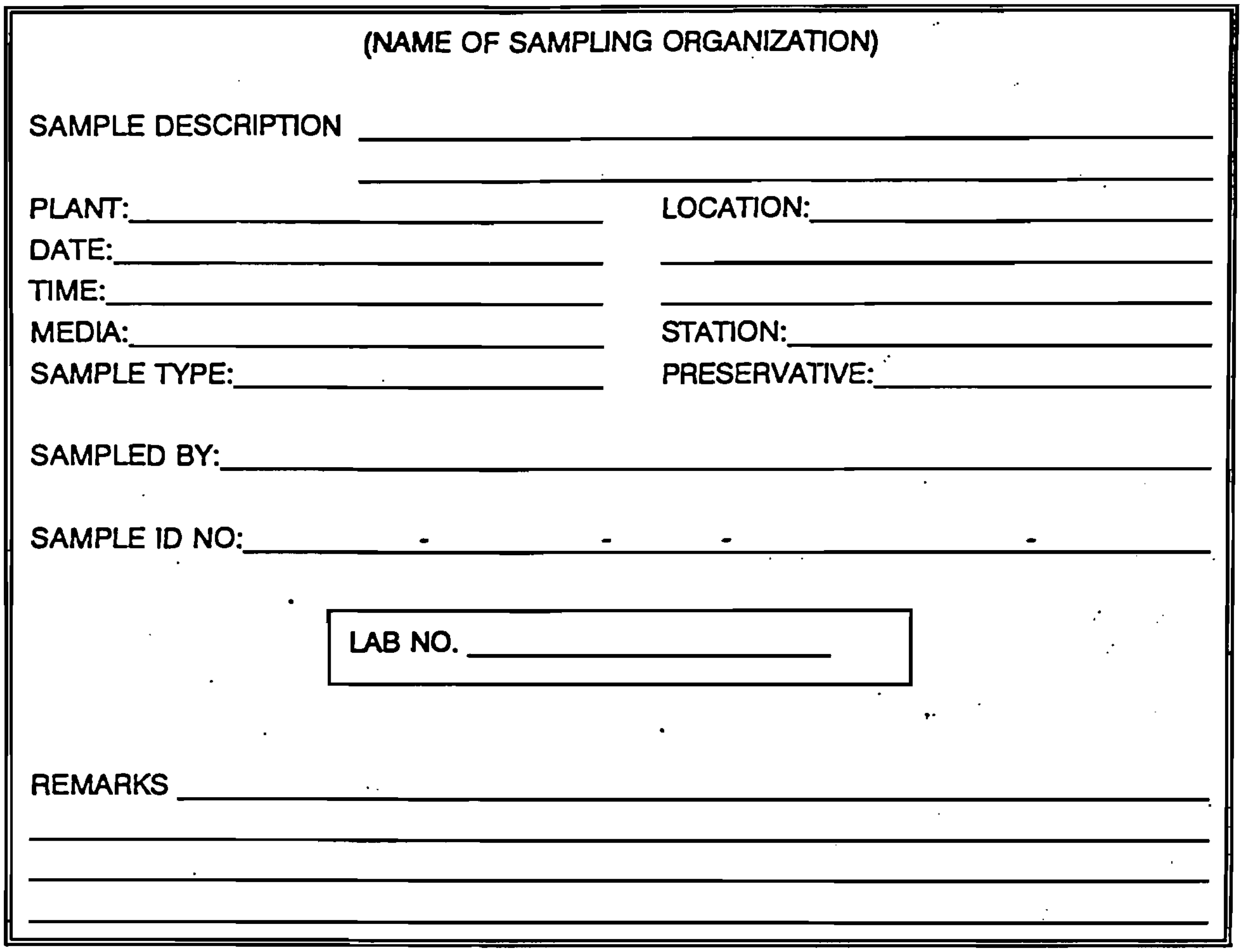

(NAME OF SAMPLING ORGANIZATION)

SAMPLE DESCRIPTION ______________________________
____

PLANT: ______________ LOCATION: ______________

DATE: ______________ ______________

TIME: ______________ ______________

MEDIA: ______________ STATION: ______________

SAMPLE TYPE: ______________ PRESERVATIVE: ______________

SAMPLED BY: ______________________________

SAMPLE ID NO: ______ - ______ - ______ - ______ - ______

LAB NO. ______________

REMARKS ______________________________
____
____
____

Figure 7-24 Example of General Sample Label

7.3 FIELD CONTROL OF SAMPLES

- The number of people who handle samples will be kept to an absolute minimum.

- The Field Crew Chief will be personally responsible for the care and control of all samples collected until they are properly transferred or dispatched.

- Tags will be prepared for each sample using waterproof ink and any other measures necessary to ensure legibility and integrity of sample identification.

- The Trial Burn Manager or designee will ensure that proper preservation, storage and security procedures are followed during field work and decide if additional samples are needed.

- Storage conditions of samples will be documented on the sample forms or project records.

7.4 PRESERVATION, TRANSFER AND SHIPMENT OF SAMPLES

- Sample preservation (refrigerant packs, ice, chemical preservatives, etc.) will be performed as required by the test plan or analytical requirements and documented on the sample inventory record.

- When transferring possession of samples, the individuals relinquishing and receiving those samples will sign, date and note the time of transfer on a sample inventory record. This record will document sample transfer from the sampler, often through another person or commercial carrier, to the analyst.

- A complete sample inventory will be enclosed with the samples being shipped and a copy will be retained by the Field Crew Chief.

- Department of Transportation (DOT) regulations will be followed for shipping container requirements. The DOT requires that the shipper make a reasonable determination whether the sample is classified as a hazardous material, and if so, that it be appropriately identified.

- Each package will be designed and constructed, and its contents limited, so that under normal transportation conditions there will be no significant release of materials to the environment or potentially hazardous conditions.

- Samples will be placed inside a shipping container for transport to the laboratory.

- All freight bills and shipping records will be retained as part of the permanent records.

7.5 LABORATORY RECEIPT, STORAGE AND CONTROL OF SAMPLES

- A project-designated sample custodian will receive the samples at the laboratory and verify that the information on the sample tags matches the inventory record.

- The sample custodian will make a check mark for each sample received in good condition, and then sign and record the date and time on the sample inventory form. Samples received in poor condition (broken, etc.) will be isolated to ensure safety, the circumstances will be documented in the sample record and the Trial Burn Manager will be immediately notified of the situation.

- For the sample shipment to be considered received in "good condition," the following criteria must be met:

  - No broken or leaking samples
  - Sample information legible
  - Samples properly preserved (as indicated on custody record and/or inventory form)
  - All samples accounted for
  - Original freight bills and shipping records received

- The custodian will note any problems on the sample records. If any samples are missing or broken, the custodian will initiate corrective action by immediately notifying the Trial Burn Manager.

- Samples will then be stored at the appropriate temperatures in the appropriate locked and restricted storage area until ready for analysis. For example, samples will be stored separate from standards, volatiles will be stored away from solvents and wastes, etc.

- Laboratory personnel will be responsible for the care and security of samples from the time of receipt until the sample is exhausted or returned to storage.

- When analyses are complete, any remaining samples will be returned to the control of the sample custodian for archiving or disposal.

7.6 HOLDING TIMES

- The abbreviated table (7-1) from SW-846 (3rd Edition, December 1989 Revision) lists holding times, storage containers and preservation requirements which will be used for the storage and handling of samples.

- Holding time requirements will be addressed in the planning stages of the project in order to schedule necessary resources or negotiate longer holding times than those listed in Table 7-1.

- The sample custodian will be responsible for providing written notification to the Trial Burn Manager of sample lots within 24 hours after receipt to expedite analyses.

- The Trial Burn Manager will then be responsible for monitoring holding times and progress of analyses for the samples.

7.7 SAMPLE DISPOSITION

- Upon project completion, the Trial Burn Manager will be responsible for providing written instructions to the sample custodian for final disposition of the samples.

- The samples will be disposed of, transferred or archived at the laboratory by the sample custodian according to the Trial Burn Manager's instructions. The disposition of the samples will be noted in the final records.

Table 7-1
Required Containers, Preservation Techniques and Holding Times

NAME	CONTAINER[a]	PRESERVATION	MAXIMUM HOLDING TIME
INORGANIC TESTS			
Chloride	P, G	None required	28 days
METALS			
Aqueous	P, G	HNO_3 to pH <2	28 days
Organic	P, G	Cool, 4°C	28 days
ORGANIC TESTS			
Volatile POHCs	G, Teflon-lined septum	Cool, 4°C with ice or refrigerant packs	14 days
Semivolatile POHCs	G, Teflon-lined septum	Cool, 4°C with ice or refrigerant packs	14 days (before extraction)

---

[a] Polyethylene (P) or glass (G)

SECTION 8.0 CALIBRATION PROCEDURES AND FREQUENCY

This section briefly describes the calibration procedures to be used during the trial burn. Waste feed systems will be calibrated prior to the trial burn. Copies of the calibration documents will be made available upon request by the official agency observer before the trial burn begins.

8.1 FIELD MEASUREMENTS

- All measurement and test equipment will have a standard operating procedure for routine use.
- Logbooks for each piece of measurement and test equipment will be maintained to record calibrations and maintenance.
- Continuous emission monitors will be calibrated against certified EPA Protocol 1 standard gases.
- All in-situ measurement instruments will be calibrated prior to and after tests and at frequencies specified by the applicable EPA reference method.
- All supporting measurement and test equipment, such as dry gas meters, thermometers, etc., will be calibrated in accordance with referenced EPA methods prior to and after each test.

8.2 SAMPLING EQUIPMENT

Stack sampling equipment will be calibrated before field sampling begins. Calibration procedures will conform to the EPA specifications listed in the "Quality Assurance Handbook for Air Pollution Measurement Systems," Volume III (EPA-600/4-77-027b). Table 8-1 lists the sampling apparatus to be calibrated, the acceptance criteria, and the method and frequency of calibration.

In general, the following procedures will apply:

- Prior to the test, the gas metering device will be calibrated against a positive-displacement wet-test meter. The calibration factor will be rechecked after the test.

Table 8-1
Calibration Procedures and Criteria for Sampling Equipment

	Parameter	Calibration Technique	Reference Standard	Acceptance limit[a]	Calibration
1.	Probe nozzle	Measure diameter to nearest 0.001 in.	Micrometer	Mean of three measurements; difference between high and low $\leq$ 0.1 mm	Prior to test
2.	Gas meter volume	Compare to wet-test meter	Wet test meter	Record calibration factor ±5% of factor	Prior to test Post-test
3.	Gas meter temperature	Compare to mercury-in-glass thermometer	ASTM Thermometer	±5°F	Prior to test
4.	Stack temperature sensor	Compare to mercury-in-glass thermometer	ASTM Thermometer	±1.5% ±1.5% mean temp.	Prior to test Post-test
5.	Final impinger temperature sensor	Compare to mercury-in-glass thermometer	ASTM Thermometer	±5°F	Prior to test
6.	Filter temperature sensor	Compare to mercury-in-glass thermometer	ASTM Thermometer	±5°F	Prior to test
7.	S-type pitot tube	Design	Design	Meets RM2 criteria	Prior to test

[a] 40 CFR 60, Appendix A.

8.3 FIELD MEASUREMENTS

- Temperature sensors will be calibrated against an ASTM mercury-in-glass thermometer, in an ice bath and a boiling water bath.
- The aneroid barometer will be checked against a mercury column barometer.
- Pitot tubes will be constructed according to the design criteria of RM 2.
- Probe nozzle diameters will be measured using a micrometer.
- Continuous emissions monitors will be calibrated using prepurified nitrogen (zero) and Protocol I (span) gases. Performance specifications are based on information in the "EPA Guidance on PIC Controls for Hazardous Waste Incinerators," Draft Final Report, EPA Office of Solid Waste (April 3, 1989).
- Process monitors will be calibrated within 30 days of the first trial burn test.

8.4 LABORATORY MEASUREMENTS

- All measurement equipment will have a standard operating procedure for routine use.
- All measurement equipment, such as balances, pH meters, gas chromatograph/mass spectrometer (GC/MS) equipment, etc., will have a logbook for recording usage, calibration, maintenance and repair.
- Analytical balances and major equipment will be serviced annually by an instrument service representative. Routine maintenance and repairs will be recorded in the instrument's logbook.

8.5 FIELD MEASUREMENTS

- Calibration of analytical balances will be checked with a standard weight (Class S or S-1) close to the amount of chemical being weighed. The analyst will check the balance calibration each time a chemical standard is prepared and note the accuracy of calibration in the laboratory notebook (i.e., with the weighing of the chemical reference material or samples).
- The calibration check for an analytical balance will be considered acceptable if the accuracy is within 1% of the true value at a calibration weight close to that of the actual material being weighed.

8.6 CHLORIDE ANALYSIS

Calibration procedures for chloride determinations are presented in Table 8-2.

8.7 METALS ANALYSES

Calibration procedures for metals analyses are presented in Table 8-3.

8.8 ORGANIC (POHC) ANALYSES

Specific procedures used to calibrate laboratory analytical apparatus are found in the appropriate analytical method. General procedures will be as described below.

Instrument calibration will not proceed until GC/MS instruments have been tuned to the criteria given in the appropriate methods. Tuning should be checked during reviews of analysis records. If the tuning does not meet criteria, all sample results for that analysis day will be considered suspect and must be rejected unless adequate technical justification can be given.

A five-point calibration curve will be established before sample analysis begins. The average relative response factors (RRFs) for each analyte must exhibit a relative standard deviation less than 30%. Every day or every 12 hours, a continuing calibration standard containing all analytes will be analyzed. The RRF for specific calibration check compounds in the daily standard must be within 25% of the daily standard; if not, then analysis should not proceed. The other analytes should also be within the 25% calibration criteria; however, the EPA methods do allow some deviation based upon technical judgement.

Method or reagent blanks will be analyzed initially to demonstrate that the system is contaminant-free, and after high-level samples have been run, to demonstrate the absence of cross-contamination with the next sample.

Internal standard area will be recorded and monitored by the analyst. The criterion is specified as -50% to +100% agreement with the last daily calibration check. A change in the internal standard area could indicate either a problem with the GC/MS or with that particular sample. A drop or rise in the area over several samples would be more indicative of a GC/MS system problem. Whatever the cause, this sample will be reanalyzed.

A QC check standard will be analyzed to verify the accuracy of the calibration. The QC check sample will be a standard solution, prepared independently from the standard solutions used for calibration. This check standard may be purchased with a certified concentration or obtained from the EPA (QA Branch, EMSL-Cincinnati, USEPA, Cincinnati, Ohio 45268). Agreement should be within ±30% of the certified value.

Table 8-2
Calibration Procedures for Chloride Determination

QUALITY PARAMETER	METHOD OF DETERMINATION	FREQUENCY	CRITERIA
Calibration-qualitative	Relative retention time	Every calibration curve	±3 standard deviations of average
	Average retention time	Every calibration curve	Within retention time window of standards
Calibration-quantitative	Initial calibration with a minimum of four standards	At least once before sample analysis	Linear correlation coefficient <0.995
	Continuing calibration	Every 10 samples and at end of day	90% - 110% of theoretical concentration
Accuracy--calibration	Certified reference solution	After every initial calibration before sample analysis	90% - 110% of theoretical concentration
Detection limit	Method must be reported in TBR	Only if a sample is reported beneath limit	N/A
Blank	One method blank carried through sample preparation and analysis	One per test	Less than detection limit

Table 8-3
Calibration Procedures for Metals Determinations

QUALITY PARAMETER	METHOD OF DETERMINATION	FREQUENCY	TARGET CRITERIA
Calibration-initial	Must bracket expected sample concentrations	Each matrix type	N/A
	Minimum of three standards generating a standard curve[a]	At least once	Correlation coefficient of linear plot >0.995
	Blank	At least once	Below one-fifth of lowest standard
Calibration-accuracy	Analysis of a calibration check standard	At least once	90% - 110% of expected value
	For ICP, reanalysis of high level standard	At least once	95% - 105% of expected value
	For ICP, analysis of interference standard	At least once	80% - 120% of expected value
Calibration-continuing	Analysis of a middle level standard	Every 10 samples	90% to 110% of expected value for ICP; 80% to 120% of expected value for GFAA and CVAA
	Analysis of a calibration blank	Every 10 samples	Less than one-half of the lowest calibration level or (ICP only) within three standard deviations of average blank

[a] Some ICP spectrometers by design require only a blank and one standard for calibration.

8.9 VOST CALIBRATIONS

8.9.1 Blanks

Numerous blank samples will be analyzed along with the field samples due to the potential for contamination. The use of such "blanks" will serve to demonstrate that background levels and sensitivity are within acceptable limits. In addition, these blanks will help to identify the source of any contamination.

Three types of blanks will be reported with the VOST sample results: field blanks, trip blanks and laboratory or system blanks.

Field blanks are VOST traps taken to the field and uncapped during changeovers to simulate exposure to ambient conditions. A minimum of one pair of field blanks is required with each six pairs of traps collected.

Trip blanks are VOST traps transported to and from the field and included with each shipment of samples back to the laboratory. These blanks are intended to demonstrate that no cross-contamination of samples has occurred during storage and shipment. Trip blanks need not be analyzed if no background interferences are demonstrated by the field blanks.

Laboratory blanks are VOST traps that are not sent to the field but remain in the laboratory. They are analyzed daily after high-level samples or if high levels of contamination are found in the field or trip blanks.

VOST blank trap results will not be used to correct trial burn results unless they are found to be statistically different from the samples as outlined in Method 0030. For all cases where a blank correction is used, both corrected and uncorrected emission data will be presented.

8.9.2 Calibration

Calibration criteria for VOST trap analysis are listed in Method 5040 and in Method 8240, "Gas Chromatography/Mass Spectrometry for Volatile Organics."

Stock standard solutions will be prepared from EPA-supplied standard materials or purchased as certified solutions. If EPA reference material is not available, all POHC standard materials will be characterized for identity and purity. The source and purity of all POHC standards will be reported in the Trial Burn Report (TBR).

Fresh stock standards will be prepared weekly for volatile POHCs with boiling points of <35°C; all other standards will be prepared no earlier than 30 days prior to analysis.

A minimum of five concentration levels for each analyte of interest is recommended for calibration. Each calibration standard will be analyzed on both a Tenax and a Tenax/charcoal cartridge; response factors for both traps will be used for determining quality control acceptance and for quantitation of sample results. To ensure adequate sensitivity of the analytical system, the calibration range should bracket the 99.99% DRE POHC concentration level. The expected POHC concentration in both the Tenax and Tenax/charcoal traps (at 99.99% DRE) will be presented in the QAPP and must be shown to be at least 10 times the level of the lowest calibration standard. The calibration range may be extended by immediately analyzing a higher concentration standard.

Quantitation will be performed for all standard data using the internal standard method for determining RRFs. If the RRF value over the working range is a constant (less than 20% RSD), the average RRF may be used to calculate POHC concentration in samples; alternatively, the results can be used to plot a calibration curve of response ratios (area standard/area internal standard) vs. RRF. The working calibration curve or RRF will be verified each working day, or every 12 hours of operation, by the analysis of a continuing calibration standard. The continuing calibration check is valid if the RRF falls within ±25% of the initial calibration data. If this check does not meet the criterion, the standard will be reanalyzed. If the second check does not meet the criterion, the acceptance of sample results from the last successful check must be justified. All initial and continuing calibration checks will be reported in the TBR.

Internal standard responses and retention times will be monitored during data acquisition. The internal standard retention time should not change by more than 30 seconds from the last calibration check. The internal standard areas in samples must be within 65% to 135% of the area observed in the last continuing calibration standard analysis. If either of these parameters changes during sample analysis, a calibration standard check will be performed. For samples in which a low internal standard area occurs, the fourth VOST trap pair may be analyzed once the analysis difficulty has been corrected.

8.9.3 Ratios of POHC Breakthrough

The front and back VOST traps will be analyzed separately to determine the breakthrough of POHCs to the charcoal adsorbent. The analysis of the Tenax/charcoal trap should indicate less than 30% of the POHC collected on the front Tenax trap. Breakthrough of the POHC to the charcoal trap above this level may cause loss of desorption efficiency and result in a negative bias in the DRE calculations. Since POHC breakthrough is a function of stack gas concentration, this criterion does not apply when less than 75 ng is detected on the back trap.

8.9.4 VOST Condensate Analysis

The condensate from the sampling train will be analyzed by purge and trap GC/MS, SW-846 Method 8240. The QC procedures consist of spiking with the surrogate POHCs. The accuracy will be calculated by the recovery of the POHC, which should be between 50% and 150%, and precision will be calculated as the relative standard deviation of the surrogate recovery from trial burn samples, which should be less than 35%.

8.9.5 Summary of QA/QC Procedures

These calibration and QC checks are summarized in Table 8-4.

Table 8-4
Summary of Calibration and QC Procedures for VOST

QUALITY PARAMETER	METHOD OF DETERMINATION	FREQUENCY	CRITERIA
Blanks--sample integrity and field contamination	Field blanks, 1 pair of traps	1 pair per 6 samples	Less than lowest standard
Blanks--verify no cross-contamination in storage and shipment	Trip blanks--1 pair of traps	1 pair with each shipment container	Less than lowest standard
Blanks--verify no laboratory contamination and system control	Lab blanks--1 pair of traps	Daily, before analysis of samples and in between high-level samples	Less than lowest standard
Initial calibration of GC/MS	5 standards bracketing DRE level	Prior to sample analysis	Variability of average RRF 20% RSD
Continuing calibration	Mid level standard	Prior to sample analysis, then every 12 hr, or after sample set	RRF within ±25% of initial calibration (RRF)
Consistency in chromatography	Monitor internal standard, retention time and area	Every sample, standard and blank	Retention time within ±30 sec of last calibration check Area is within 65% to 135% from last daily calibration check
Precision and accuracy	Replicate analysis of 3 traps spiked with a standard independent of calibration standards at the expected level of 99.99% DRE	Demonstrated prior to sample analysis	75%-125% recovery; ±25% RSD
Continuing accuracy check	Spike each sample with surrogate POHC	Every sample	Within 3 standard deviations of the initial accuracy found during the precision and accuracy determination
Verification of VOST system accuracy	Analysis of samples from EPA audit cylinder	Required with each trial burn	Within 50%-150% of certified concentration
Detection limit	Replicate analysis of low-level spiked trap	At least once for each POHC if limit is used in DRE calculation	N/A

Table 8-4
Summary of Calibration and QC Procedures for VOST (Cont.)

QUALITY PARAMETER	METHOD OF DETERMINATION	FREQUENCY	CRITERIA
Breakthrough determination	Separate analysis of front and back traps	Every pair	Tenax/charcoal trap must have less than 30% of POHC amount on Tenax trap (does not apply if there is less than 75 ng POHC on back trap)
VOST condensate: precision and accuracy	Surrogate POHCs spiked	All trial burn condensate samples	Recovery between 50%-150%; relative standard deviation of all recoveries <35%

SECTION 9.0 ANALYTICAL PROCEDURES

Analytical procedures to be used in this project are discussed in the Trial Burn Plan and are summarized in Table 3-1 of the QAPP.

SECTION 10.0 DATA REDUCTION, VALIDATION AND REPORTING

10.1 DATA REDUCTION

All original data will be archived as part of the project records. Sample calculations will be provided for showing derivation of test results, as shown in the equations below. Figure 10-1 shows the data flow chart and corresponding QC checkpoints.

10.2 DATA REDUCTION FOR ORGANICS OR METALS

The organic compound or metal concentration as ng/sample obtained from the analysis will be used to calculate concentration as ng/g in the waste feed samples as follows:

$$C = \frac{C_{(sample)}}{M_{(sample)}}$$

where:

C = Concentration of organic or metal in sample, ng/g

$C_{(sample)}$ = Concentration of organic or metal in sample from analysis, ng/sample

$M_{(sample)}$ = Mass of waste sample analyzed, g

10.3 PARTICULATE EMISSIONS

Particulate matter emissions will be presented in units of grains per dry standard cubic foot of gas, corrected to 7% excess O_2 as follows:

$$P_c = \frac{14 \ x \ P_m}{21 - Y}$$

in which:

P_c = Corrected concentration of particulate matter (gr/dscf at 7% O_2)

P_m = Measured concentration of particulate matter (gr/dscf)

Y = Measured oxygen concentration in the stack gas using the Orsat method (volume percent, dry basis)

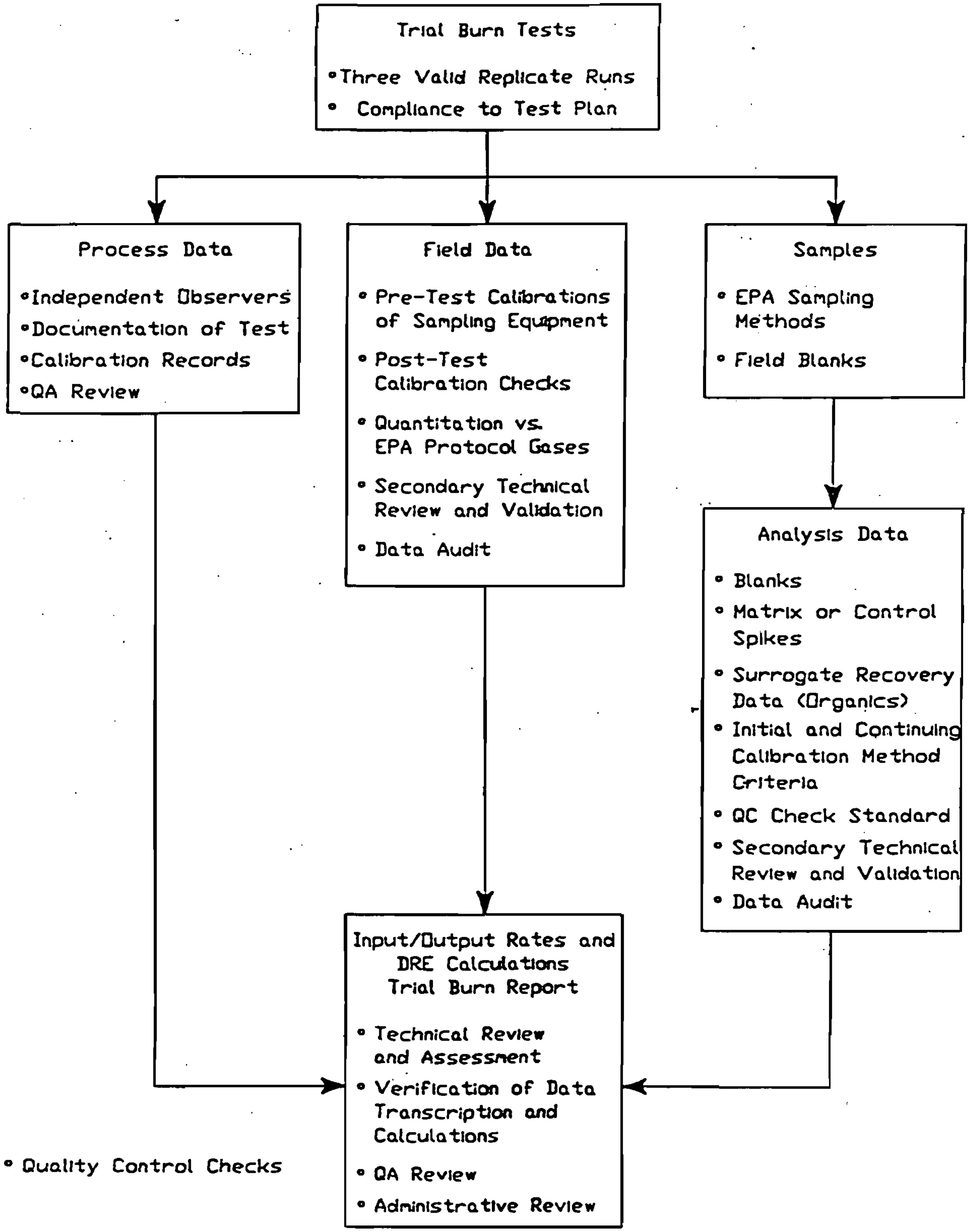

Figure 10-1 Data Flow Chart and QC Checkpoints

10.4 DATA REDUCTION FOR STACK EMISSIONS OF ORGANICS, METALS, HCl AND PARTICULATE

The stack gas concentrations of the component of interest (e.g., organics/POHCs, metals, chlorides, and particulate) will be determined by the following equations:

a. <u>Concentration of Organics or Metals</u>

$$C_{stack} = \frac{C_{(sample)}}{V_{m_{std}}}$$

where:

C_{stack} = Concentration of organics or metals in the stack gas, ng/dscm

$C_{(sample)}$ = Concentration of organics or metals in sample from analysis, ng/sample

$V_{m_{std}}$ = Volume of gas samples, dscm

$V_{m_{std}}$ is calculated according to equation 6.3, Reference Method 5 (RM5), 40 CFR 60, Appendix A. Metals concentrations calculated above will be converted to pounds and multiplied by the measured stack gas flow rate to calculate metals emissions in lb/hr.

b. <u>Concentration of Particulate</u>

$$C_{particulate} = \frac{M_n \times 10^{-3}}{V_{m_{std}}}$$

where:

$C_{particulate}$ = Concentration of particulate matter in stack gas, g/dscm

M_n = Total mass of particulate collected during test, mg (sum of mass collected on the filter and in the probe filter wash, less the acetone blank)

$V_{m_{std}}$ = Volume of gas samples, dscm (equation 5-1, RM5)

10.4 DATA REDUCTION FOR STACK EMISSIONS OF ORGANICS, METALS, HCl AND PARTICULATES (CONT.)

c. Concentration of Chloride

$$C_{Cl^-} = \frac{\Sigma(Cl^- \times V)}{V_{m_{std}}}$$

where:

C_{Cl^-} = Concentration of Cl^- in stack gas, mg/dscm

Cl^- = Measured chloride concentration of aliquot by ASTM Method 4327-84, mg Cl/L

V = Total volume of impinger sample aliquot was removed from, L

$V_{m_{std}}$ = Volume of gas sampled, dscm (equation 5-1, RM5)

10.5 DATA VALIDATION

- A second technical review of the data will be performed and documented by a qualified scientist other than the one who performed the actual analyses. The second reviewer will include evidence (e.g., check marks, recalculations, etc.) that show which data points were checked. Finally, the second reviewer will sign and date the cover page of the data packet or the record that was reviewed.

- In-situ measurements will be validated by demonstrated acceptable post-test leak checks and calibration verifications according to the referenced method used.

- Analysis data may be validated according to defined criteria by a secondary reviewer or by the analyst. At a minimum, analysis data will be validated according to the following criteria (additional method-specific criteria or project requirements may apply):

  - Sampling records complete and traceable

  - All appropriate QC samples included with the analytical batch and reported with the sample results

  - Routine tuning, calibration and inspection of analytical instrumentation documented and performed prior to analyses

  - Initial and continuing calibration criteria met

  - Method/reagent blanks confirm no background contamination

  - Surrogate recoveries within criteria

  - Qualitative sample results (e.g., retention times, mass spectra, isotopic ratios) consistent with standard data

  - Sample data within the calibrated range of the instrument

  - Chromatograms or other raw data consistent with computer-generated quantitation reports

  - Accuracy of intermediate data manipulations, transcribed numbers and/or final reported results verified

  - Reference standards, instrumentation, sample identification, analysts, methodology, and sequence of processing clearly identified and traceable in the project records

- Lost data or corrective actions documented (e.g., loss of sample, reanalysis, redilutions, additional cleanup steps, alternative calculations, etc.)
- Data that does not meet the validation requirements flagged accordingly
- Data reported in the correct units (e.g., "ppm" should not be used without specifying volume or mass units; "ug/g" are preferred units for data reporting)

10.6 REPORTING OF RESULTS

The results will be presented in a format which meets the requirements of the USEPA and RCRA Part B Trial Burn Reporting Requirements. The results will be calculated and reported as shown in the following sections. Data for all trial burn runs will be reported in the trial burn results. Any data that is not acceptable because of technical difficulties will be indicated, and an explanation of the technical problem will be given. All related QC and calibration data will be in the final report. The proposed report outline is presented later in this section.

Additional reporting requirements and project deliverables required for the final report will include the following items:

- Results of all quality control analyses, including spikes, replicates and performance check/evaluation samples. Spiked sample data will include nanograms applied and nanograms recovered, as well as percent recovery data.
- Results of all surrogate compound analyses including quantities applied and recovered from every program sample. Percent recovery data for the surrogate compound will also be provided.
- Results of all of the daily performance check samples pertinent to the set of samples submitted for analysis. The performance check solution and the calibration solution data are needed to demonstrate GC/MS resolution, sensitivity, response factor reproducibility and mass range calibration.
- Copies of actual selected ion current profiles (SICPs) and raw and background subtracted spectra pertinent to each sample.
- Copies of all calibrant response-factor calculations, plotted concentration calibration curves and computer-derived quantitation reports.
- A chronological list of all analyses performed, including the data system file name, sample number for each sample, blank, concentration calibration solution and performance check solution. This will include all labeled peaks, as well as the internal standard and surrogate.

- The document control and sample custody package which includes sample tags, custody records, sample tracking records, analyst log book pages, computer printouts, raw data summaries and instrument log book pages.

- Narrative reports for analyses to indicate methods used, example calculations, modifications and any problems encountered during the analyses that may not be evident in the data files.

- Complete inventory of sample identifications and type of sample which were collected and analyzed.

- Holding times for extraction and analysis of samples.

- QC summary tables (e.g., surrogate recoveries, precision and accuracy of spiked samples, blank results, calibration results, etc.).

- Summary of audits conducted and results.

- Validation criteria and procedures used during technical review of the data.

- Procedures and equations used for calculating MDL (especially those used to derive regulatory emission values). MDL procedures will also be consistent with SW-846 current revision.

- Flags and explanations of all data which failed one or more QC criteria (e.g., low surrogate recoveries or high blank values, etc.).

10.6.1 POHC DRE and Detection Limits

The results of the sampling and analysis procedures described above will include data on the concentration of each designated POHC in the representative waste feed sample and corresponding stack gas sample for each of the test runs. The DRE value will be calculated for each POHC for each test run as follows:

$$DRE = \frac{W_{in}-W_{out}}{W_{in}} x\, 100\%$$

where:

W_{in} = Concentration of POHC in waste feed x mass feedrate of waste (lb/hr)

W_{out} = Concentration of POHC in stack gas x volumetric flow rate of stack gas (lb/hr)

The DRE calculation uses two significant figures in all calculations and the results are rounded to the third decimal place.

To demonstrate that the sample size and analytical sensitivity will allow the determination of 99.99% DRE: the worst-case detection limit will be in Test 3, where 35 lb/hr of each POHC is fed to the unit.

$$35\ lb/h\ x \frac{1\ h}{60\ \text{min}}\ x \frac{454\ g}{lb}\ x \frac{10^9\ ng}{g} = 2.65\ 10^{11} ng/\text{min}\ \textit{input rate for each POHC}$$

2.65×10^{11} ng/min x (1 - .9999) = 2.65×10^{7} ng/min output rate for each POHC at minimum DRE of 99.99%

Divide by the stack flow rate to get the stack concentration of each POHC.

$$\frac{2.65\ x\ 10^7\ ng/\text{min}}{70851\ acfm} = 374\ ng/ft^3$$

Multiply by sample volume of VOST to obtain total ng in sample.

$$\frac{374\ ng}{ft^3}\ x \frac{1\ ft^3}{28.32L}\ x \frac{20\ L}{sample} = 264\ ng/sample$$

This quantity is well above the detection limit for VOST. Detection limits for VOST samples are normally 10 ng/sample.

10.6.2 Metal Emissions

The concentration of each of the 10 metals in the waste feeds, auxiliary fuel, process effluents and stack gas effluent samples will be reported for Test 2. The metal influent and emission data will be reported for each of the metals. If no metal is detected or the blank level exceeds the sample level, the data will be reported as "less than" levels. The results of the sampling and analysis will provide data on the concentration of each metal in the waste feed samples and corresponding process and stack gas effluent samples for Test 2.

10.6.3 Hydrogen Chloride Emissions

HCl emissions will be presented in lb/hr and a removal efficiency will be calculated based on the chlorine content of the waste feed. The removal efficiency will be calculated from the total equivalent mass of HCl fed into the incinerator from all feed materials during each run and from the total mass of HCl emitted from the stack during the run.

10.6.4 CO and THC Emissions

The average and maximum concentrations of CO and THC in parts per million will be reported for each run on an as-measured (dry) basis, and corrected to 7% O_2.

The average concentration of O_2 measured with the Orsat and the average, minimum and maximum O_2 concentration measured with the facility's continuous analyzer (in percent) will be reported for each run.

10.6.5 Waste Feed and Process Sample Analysis

The concentration of the various POHCs and metals will be reported in units of micrograms per gram. These values will be reported for each composite sample for each run. The total mass of the individual POHCs and metals fed to the incinerator during each test will be calculated from these concentrations and the process operation data for the amount of each material fed to the incinerator during each test.

10.6.6 Proposed Report Outline Including Appendices

A proposed outline for this report is as follows:

1.0 INTRODUCTION

2.0 INCINERATOR DESCRIPTION AND OPERATING DATA
    2.1 INCINERATOR DESCRIPTION
    2.2 OPERATING DATA

3.0 SUMMARY OF RESULTS
    3.1 PROCESS OPERATING CONDITIONS
    3.2 EMISSION TEST RESULTS

4.0 TEST RESULTS
    4.1 OVERVIEW OF SAMPLING AND ANALYSIS METHODS
    4.2 WASTE FEEDRATES, WASTE CHARACTERISTICS AND PROCESS SAMPLES (HHV, TOTAL Cl, ASH, VISCOSITY, POHCs AND METALS)
    4.3 POHC INPUT RATES
    4.4 VOST EMISSION DATA FOR VOLATILE POHCs
    4.5 M5-SV EMISSION DATA FOR SEMIVOLATILE POHCs
    4.6 DREs FOR POHCs
    4.7 PARTICULATE EMISSION RESULTS
    4.8 M5-M EMISSION DATA FOR METALS
    4.9 HCl EMISSIONS AND REMOVAL EFFICIENCY
    4.10 ORSAT DATA FOR O_2 AND CO_2
    4.11 CONTINUOUS EMISSIONS MONITORING DATA
    4.12 POHC CONCENTRATION IN ASH, DRIED SOLIDS AND PROCESS SAMPLES
    4.13 METALS CONCENTRATIONS IN ASH, DRIED SOLIDS AND PROCESS SAMPLES
    4.14 QUALITY ASSURANCE DATA

Volume 2–Appendices

Part A Appendix A–Sampling and Analysis Procedures
Appendix B–Example Calculations
Appendix C–Field Data
Appendix D–Process Data
Part B Appendix E–Particulate/HCl Calculations
Appendix F–Chlorine, Ash, Higher Heating and Viscosity Value Results
Appendix G–Volatile POHC Results
Appendix H–Semivolatile POHC Results
Appendix I–Metals Analysis Results
Appendix J–Quality Assurance Audit Report
Appendix K–Calculation Data
Appendix L–Continuous Monitoring Data
Appendix M–Sample Log
Appendix N–Calibration Data

The report will contain a detailed tabulation of the test results. The report will also provide a description of the incineration system, waste feeds, test site location, location of sample collection points, test conditions, sampling and analytical methods, and procedures employed to conduct the testing, and a full complement of appendices including raw field data, laboratory data, computations, field notes and observations, raw incinerator operating data, copies of continuous monitoring data, and equipment calibration data.

SECTION 11.0 INTERNAL QC CHECKS

QC checks will be performed as stated in Section 5.0, Table 5-1, "Data Quality Objectives for Measurement Data," and in Section 8.0, "Calibration Procedures and Frequency."

SECTION 12.0 PERFORMANCE AND SYSTEM AUDITS

12.1 LABORATORY SYSTEMS AUDITS

During or before sample analysis, the QAC will

- Conduct a systems audit of actual laboratory practices vs. protocol
- Inspect equipment calibration and maintenance logbooks
- Report any deviations from protocol

While work is in progress and after data has been generated, the QAC will examine data, records and documentation for traceability and compliance with QC requirements.

12.2 ANALYTICAL PERFORMANCE AUDIT

Audit samples will be submitted by the QAC into the analytical flow for metals, volatiles and semivolatile POHCs, chloride analysis and total organic chlorine. Accuracy will be determined by the QAC based on reported test results.

12.3 REVIEW OF FIELD RECORDS

Upon completion of sampling, the QAC will inspect equipment calibration and maintenance logbooks, field data forms and records, and calculations of results. Deviations from protocol and all results will be reported. A systems audit will not be conducted during actual field sampling.

12.4 QA AUDIT SUMMARY

A QA report will be provided with the TBR to summarize audits performed and results.

13.0 PREVENTIVE MAINTENANCE PROCEDURES AND SCHEDULES

Preventive and routine maintenance for test equipment will be covered in instrument standard operating procedures (SOPs), in accordance with manufacturers' recommendations. Daily maintenance (such as the replacement of injector septums, etc.) will be covered in instrument SOPs.

Inoperative equipment will be tagged as non-usable until repairs are performed. When parts are replaced, the serial number of the new parts will be logged into the maintenance book, and instrument performance will be verified or recalibration will be performed as needed.

Logbooks will be kept next to each instrument to record usage, maintenance and repairs.

14.0 PROCEDURES FOR ASSESSING DATA ACCURACY, PRECISION AND COMPLETENESS

The following equations will be used in conjunction with the QC objectives listed in Table 6-1.

14.1 PRECISION

Precision will be calculated as follows:

- For data sets of two or three, precision will be calculated and expressed as Range Percent Difference (RPD), the percentage of the range of measurements over the mean.

$$RPD = \frac{\text{maximum value} - \text{minimum value}}{\text{mean value}} \times 100$$

- For data sets of four or more, precision will be calculated and expressed as Relative Standard Deviation (RSD), the percentage of the standard deviation over the mean.

$$RSD = \frac{S}{\bar{x}} \times 100$$

where the mean,

$$\bar{x} = \frac{x_1 + x_2 + x_3 + \dots x_n}{n}$$

and the standard deviation,

$$S = \sqrt{\frac{\Sigma (x_i - \bar{x})^2}{n - 1}}$$

where S is estimated with n-1 degrees of freedom.

14.2 ACCURACY

Accuracy will be calculated as follows:

- Accuracy will be expressed as Percent Recovery (for surrogate spiked chemicals or matrix spikes), Percent Accuracy (for audit samples or QC check samples) or Percent Difference (for continuing calibration verification).

- Percent Recovery will be calculated by the following equation:

$$\text{Percent recovery} = \frac{\text{Amount found - native value}}{\text{Amount added}} \times 100$$

- Percent Accuracy will be calculated by the following equation:

$$\text{Percent accuracy} = \frac{\text{Found value}}{\text{Audit or reference value}} \times 100$$

- Percent Difference will be calculated and expressed by either:

a. Quantitation Using Response Factors

$$\text{Percent Difference} = \frac{RF - \overline{RF}}{\overline{RF}} \times 100$$

where:

$\overline{RF}$ = Average response factor from initial calibration

RF = Response factor from a calibration check standard

b. Quantitation by Linear Regression

$$\text{Percent Difference} = \frac{\text{X Found - X Theory}}{\text{X Theory}} \times 100$$

where:

X Found = Mass or concentration of standard calculated using the linear regression equation

X Theory = Theoretical mass or concentration of the check standard

14.3 COMPLETENESS

Completeness will be calculated as follows:

$$\text{Completeness (\%)} = \frac{\text{number of valid points obtained}}{\text{number of data points expected}} \times 100$$

15.0 REMEDIAL AND CORRECTIVE ACTIONS

- Remedial action will consist of deliberate measures taken by an analyst or Project Leader to correct an immediate problem.

- Corrective action will consist of deliberate measures taken by the analyst, Project Leader or the department to eliminate the cause of a problem.

- Remedial or corrective actions may be initiated while work is in progress, during technical review or following an audit.

The following procedures will be used to resolve typical problems that may occur during routine sampling and analysis operations. Other unanticipated problems will be immediately brought to the attention of the Project Leader or QAC as appropriate for expedient resolution.

PROBLEM	REMEDIAL/CORRECTIVE ACTION
Lost, broken, incomplete or invalid sample	1. Resample or extend test, if possible. 2. Contact Project Leader for instructions. 3. Redo the test if lost sample(s) severely compromise test results. 4. Document the problem and actions taken in the field or laboratory notebook for inclusion in the project files.
Contamination of blanks and/or samples	1. Determine source of contamination (e.g., field or laboratory) and which test samples may be affected. 2. Contact Project Leader for instructions. 3. Report sample results without correcting for background levels if it does not compromise overall project objectives. 4. Correct sample results by subtracting out background levels if the source has been identified and the levels are statistically the same in multiple blanks. 5. Flag affected data in the report.

PROBLEM	REMEDIAL/CORRECTIVE ACTION
Initial calibration does not meet objectives	1. Verify that no standards are outliers (e.g., dilution error). 2. Review the standard data to ensure that the analytical system is in a linear operating range; i.e., no actual deflection in the calibration curve caused by saturation or loss of sensitivity. 3. Check and adjust instrument operating parameters, as appropriate. 4. Reanalyze the calibration standards(s) if appropriate to meet calibration criteria (e.g., if an outlying standard was caused by a bad injection). 5. Contact the Project Leader to proceed with a reduced calibration range or less stringent acceptance criteria. 6. Document the problem and actions taken in the project records.
Continuing calibration criteria do not meet objectives	1. Reinject standard once to confirm results. 2. Rerun an initial calibration if second attempt does not meet criteria. 3. Contact Project Leader to see if samples from last acceptable calibration check need to be rerun. 4. Document the recalibration, update response factors and note any reanalysis of samples.
Missed holding times NOTE: Holding time requirements will be addressed in the planning stages of the project in order to schedule necessary resources or negotiate longer holding times than those listed in the QAPP.	1. Notify Project Leader immediately of pending missed holding times. 2. Request additional resources (staff, equipment, overtime, etc.) to meet holding time schedules. 3. Write an internal memorandum to the QAC stating the reason for missed holding times, identifying the samples affected and listing the number of days samples were past holding times.
QC data does not meet objectives	1. Describe the extent and nature of technical problems in narrative report that accompanies the data packet. 2. Notify Project Leader. 3. Assess problem against project objectives. 4. Footnote appropriate test results in the test report to clearly show the nature and extent of the missed QC objectives.

PROBLEM	REMEDIAL/CORRECTIVE ACTION
Calculation errors	1. Minor calculation errors will be corrected by the analyst or technical reviewer, and so documented in the project records traceable to the person, date and reason for correction. 2. Major calculation errors, or those errors that significantly affect test results in accuracy or number, will be corrected and so documented by the analyst or technical reviewer in a memo to the Project Leader and file. 3. Calculation errors found during an audit will be handled as a formal corrective action request to the Project Leader.
QC check standard does not meet objectives	1. If initial results of the check standard do not agree, another QC check standard will be prepared and analyzed. 2. Analyses of samples will be stopped until the calibration curve is validated by a successful analysis of an independent standard. 3. If the second determination confirms disagreement between standards, then a third independent source of reference material will be obtained and analyzed to validate the calibration curve.
Audit sample does not meet objectives	1. If initial results of the audit sample do not agree, another audit sample prepared and analyzed. 2. Analyses of samples will be stopped until successful analysis of an audit sample, if specifically required by the test plan or QA plan (e.g., a VOST audit sample). 3. If the second audit sample confirms that results are outside acceptance criteria, the problem will be evaluated by the Project Leader to decide if sample analyses should continue.
Documentation errors or omissions found during technical review or audit	1. Documentation errors or emissions found during technical review will be corrected by the analyst prior to release of the data. 2. Documentation errors or omissions found during an audit will be so documented and require a formal corrective action request and follow-up confirmation by the auditor that the problem was resolved.
Documentation errors or omissions found during technical review or audit	1. Documentation errors or emissions found during technical review will be corrected by the analyst prior to release of the data. 2. Documentation errors or omissions found during an audit will be so documented and require a formal corrective action request and follow-up confirmation by the auditor that the problem was resolved.

16.0 QUALITY ASSURANCE REPORTS TO MANAGEMENT

The QAC, in cooperation with the Project Leader, will identify critical areas of the project which will be subject to inspection. The inspection will include a review, where applicable, of

- Staff qualifications
- Equipment calibration and maintenance records
- Performance audits
- Systems audits
- Sample control
- Document control
- Data entry, including error handling, corrections and additions
- Data traceability and completeness
- Data calculation and validation
- Internal QC data
- External QA data
- Assessment of data accuracy, precision and completeness

The results of inspections/audits will be reported to the Project Leader and administrative management; summaries will be included in the final reports.

The QAC will independently maintain a QA file for this project. At the end of the project, the QA project will be turned over to the Project Leader.

SECTION F

discharges that could lead to the release of hazardous waste constituents and adversely affect human health or the environment.

The types of potential problems associated with each on-site waste management unit are discussed in Section 3.0 of Appendix F. The inspection schedule laid out in Section 3.0 of Appendix F sets the frequency for inspecting various items (features or conditions) on monitoring equipment, safety and emergency equipment, security devices, operating and structural equipment, and all auxiliary equipment. These items are important because of their role in preventing, detecting or responding to human health and environmental hazards.

The terms and frequencies prescribed by 40 CFR 264.174, 264.195, and 264.347 are incorporated into the Inspection Plan in Appendix F; examples of inspection frequencies of main structures and equipment are summarized in Table F-1.

Inspections will be conducted and recorded using forms especially designed to contain pertinent information. Remedial Action Request/Evaluation (RARE) forms will be prepared by the General Manager or Environmental Manager for each discrepancy noted by an inspector. The format and layout of the individual forms may change over time to accomodate regulatory changes and equipment changes or to streamline the forms for efficient use. All completed

During the unloading of bulk tank trucks:

- Incoming truck drivers will provide their own safety gear;
- FFP-LP personnel will wear appropriate safety gear (e.g., safety goggles or face shield, rubber gloves, impervious clothing, hard hat, chemical-resistant steel-toed and shank boots, and respirator); and
- Trained FFP-LP personnel will hook up all truck hoses, open and close all valves, operate on-site pumps, and unload the waste.

F.4.2 Run-off Control

The waste storage areas, the incinerator, and inorganic treatment reactors are located on diked concrete pads and sloped to direct run-off flow into sumps. The waste storage and process areas will all be surrounded by concrete dikes which will prevent both run-off from and run-on into the areas. All run-off from the hazardous waste management areas at FFP-LP will be kept within secondary containment systems by concrete dikes, collected in sumps, transferred to storage tanks, and managed as hazardous waste at the facility. The floors and sumps within the systems will be coated with an impervious sealer to prevent the escape of hazardous wastes into the ground and the intrusion of groundwater into the secondary containment systems. Examples of basic housekeeping precautions to prevent flow of material into sumps are to maintain safe and efficient waste handling operations and to ensure the integrity of containers, pipes, or other devices used to transfer wastes via regular inspection as described in the Inspection Plan (Appendix F). Liquid accumulating in the sumps detected by the daily inspections of secondary containment areas will be removed in a timely manner to further prevent the kilns if equipment fails or if power is lost during temporary outages. Power surges will be attenuated by surge blockers installed at the input points of the power lines into the facility. In the case of major power outages, an on-site back-up generator will be activated to supply power to facility indoor and outdoor lighting, emergency warning and detection systems, and critical hazardous waste operations after the integrity of a number of key operational systems and parameters are checked and determined to be unaffected and functional. The process operations staff in the control room will have the option of delaying the start-up of the systems until a more extensive check has been conducted.

As described in Section D, critical incinerator systems and equipment will be automatically monitored and their condition displayed in the control room, which will be constantly staffed 24 hours a day to monitor incinerator operations and level indicators/alarms. Equipment failure that could compromise system performance will either set off automatic control/corrective procedures or will alert the operator to the system problem. This, coupled with the frequent routine inspections described in Section F.2, will serve to adequately mitigate the effects of equipment failures.

F.4.5 Personnel Protection

Personnel protection and safety equipment will be available for all FFP-LP employees who handle or may be exposed to hazardous waste. Standard Operating Procedures will include descriptions of the personal protective and safety equipment required during normal operations, as well as during start-up and shake-down. Personal protective equipment include hard hats with face shields or goggles, chemical-resistant steel-toed and shank boots/shoes , gloves, impervious coveralls or rain gear, and

TABLE 3-1

GENERAL FACILITY INSPECTION SCHEDULE AND CRITERIA

ITEM	EVALUATION CRITERIA
Daily	
Alarm System/Fire Call Boxes	Condition, accessibility, location signs.
Main gate and locks	Condition, operability.
Weekly	
Boundary fence	Condition and integrity of chain-link and barbed wire.
Side gates and locks	Condition, operability.
Emergency lighting	Operability of emergency generator.
Safety showers and emergency eyewash stations	Operability, accessibility, location signs, and sufficient water pressure and flow.
Air horn	Accessibility.
Evacuation alarms	Accessibility and operability.
Spill clean-up equipment	Condition, accessibility, and supply of recovery drums and absorbent material.
Oxygen/explosivity meter	Operability and sufficient charge.
~~Emergency~~ Motion detector	Operability and sufficient charge.
Personal protection equipment	Condition, accessibility, and recharging status of air purifying respirators, SCBAs, 5-minute escape air pack.
Emergency equipment: over-pack drums, shovels, rakes, stretcher, oxygen supply, flashlights, and spare batteries	Condition, supply, accessibility.

TABLE 3-1
(continued)

GENERAL FACILITY INSPECTION SCHEDULE AND CRITERIA

ITEM	EVALUATION CRITERIA
Monthly	
Warning signs: "Danger, Authorized Personnel Only;" "No Smoking"	Presence, readability at the perimeter fence, entrance, facility.
Facility Communications System: intercom system, telephones, PA system, emergency alarms	Operability.
Exterior yard lighting	Condition, operability.
Interior emergency lighting	Condition, operability.
Alternate power supply for alarm system	Connection and adequate charge.
Facility water supply for fire suppression [including hydrants, standpipes (if applicable), pumps, etc.]	Operability, sufficient flow and pressure.
Automatic water/foam sprinkler fire suppression systems	Condition, operability
Halon fire suppression systems	Condition, operability
Fire Blankets	Adequate supply, accessibility, and condition.
Fire extinguishers (A, AB and BC)	Full charge on pressure gauge, condition and unbroken seal, accessibility, accuracy of inspection tags, and location signs.
First aid kit	Accessibility, adequate stock, condition. Supply replenished by outside contractor.
Personnel protection items: goggles, respirators, gloves, hardhats, boots, chemical-resistant suits	Adequate supply, accessibility, location signs, and condition.

TABLE 3-1
(continued)

GENERAL FACILITY INSPECTION SCHEDULE AND CRITERIA

ITEM	EVALUATION CRITERIA
Monthly (continued)	
Air-purifying respirators and cartridges	Adequate supply and condition.
Self-Contained Breathing Apparatus and emergency oxygen kits	Adequate air/oxygen charge, accessibility, location signs.
Air Horn	Operability

TABLE 3-3

CONTAINER STAGING AND PROCESSING SYSTEM INSPECTION SCHEDULE AND CRITERIA

ITEM	EVALUATION CRITERIA
Daily	
Secondary containment system	Condition of surfaces (curbs/floors), sumps, and berms. Absence of spills or accumulated liquids on base or in sumps.
Containers	Condition and proper labeling of containers. Tightness of lids and bungs.
Container arrangement	Adequate aisle space, proper stacking, proper segregation of incompatible or flammable wastes prior to processing.
Pump stations	Condition of pipes, valves, pumps, fittings, connections, and other ancillary equipment.
Unit capacity	Number of containers stored is within limits.
Ventilation fans	Operability.
Weekly	
Container inventory	Accuracy of inventory records.
Emission Control System (when operating)	Functioning and integrity of activated carbon beds.
Nitrogen Blanket System (in drummed pumpable waste receiver tank	Supply and Operability
Monthly	
Building	Integrity of floor, walls, and roof, and operability of ramps and doors.

TABLE 3-5

STORAGE AND PROCESS TANKS INSPECTION SCHEDULE AND CRITERIA

ITEM	EVALUATION CRITERIA
Daily	
Secondary containment systems	Condition of surfaces (curbs/floors), sumps, and berms. Absence of spills or accumulated liquids on base or in sumps.
Tanks, valves (e.g., pressure control valves), transfer pipes, level gauges, and other ancillary equipment	Integrity of tank shell, flanges, and connections. Level in tanks. Operability of valves and gauges.
Pump Stations	Condition of pipes, valves, pumps, and fittings.
Overfill Control	Operability of level switch and block valve.
Ventilation Fans	Operability
Weekly	
Tank supports	Structural integrity.
Inventory	Accuracy of inventory records.
Monthly	
Catwalks, ladders, stairs	Condition and completeness of sections.
Emission Control System (when operating in organic storage area)	Functioning and integrity of activated carbon beds or scrubber
Agitator	Integrity, operability.
Nitrogen Blanket System (in Organic Treatment Pumpable Waste Storage Area)	Supply and operability.
Roof, gutters, downspouts	Condition
Annually	
Tank walls, vents	Suitability for continued service. (Integrity, thickness testing)

TABLE 3-7

INORGANIC TREATMENT SYSTEM INSPECTION SCHEDULE AND CRITERIA

ITEM	EVALUATION CRITERIA
Daily	
Secondary containment system	Integrity of base. Absence of spills or accumulated liquids on base or in sumps. Proper removal of debris, clean-up residue. Absence of evidence of seepage outside containment area (e.g., discoloration, dead vegetation).
~~Process~~ Reactors, dissolving and filtrate tanks	Operation of overfill control and leak detection system. Integrity of ~~process~~ tank exteriors.
Emission Control System	Functioning and integrity of scrubber and fans.
Monthly	
Spill prevention and leak detection system	Operation, condition.
Annually	
Tank walls	Suitability for continued service. (Integrity, thickness testing)

FLORIDA [illegible] PROCESSING, L.P.

DAILY INSPECTION ELEMENT STATUS REPORT
CONTAINER STAGING AND PROCESSING AREAS
(continued)

Name of Inspector ______________________ Date/Time of Inspection: ___/___/___ @ _____ a.m./p.m.

AREA #____________

Item	Evaluation Criteria	Status: Pass/ Fail	Observations	Recommendations (or RARER No.)
Unit capacity	Number of containers stored is within limits.			
Ventilation Fans	Operability.			
Emission Control System (when operating)	Functioning and integrity of activated carbon beds.			
Nitrogen Blanket System (in Organic Treatment Container Staging Area)	Supply. Operability.			

Comments: ____

____

____

____

Date: 10/15/90
Revision: 2

FLORIDA FI[illegible] PROCESSING, L.P.

[illegible] 1 of 2

DAILY INSPECTION ELEMENT STATUS REPORT
STORAGE AND PROCESS TANKS

Name of Inspector ______________________ Date/Time of Inspection: ____/____/____ @ ______ a.m./p.m.

AREA #____________

Item	Evaluation Criteria	Status: Pass/ Fail	Observations	Recommendations (or RARER No.)
Secondary Containment Systems	Condition of •surfaces (floors/curbs); •sumps; •berms.			
	Absence of spills or accumulated liquids on base or in sumps.			
Tanks, Valves (e.g., Pressure Control Valves), Transfer Pipes, Level Gauges, and other Ancillary Equipment	Integrity of • tank shells; • flanges; • connections.			
	Levels in tanks.			
	Operability of • valves; • gauges.			
Overfill Control	Operability of • level switches • block valves			
Pump Stations	Condition of • pipes; • valves; • pumps; • fittings.			

Comments: ____

Date: 10/15/90
Revision: 2

FLORIDA F[illegible] PROCESSING, L.P. [illegible] 2 of 2

DAILY INSPECTION ELEMENT STATUS REPORT
STORAGE AND PROCESS TANKS
(continued)

Name of Inspector ______________________ Date/Time of Inspection: ____/____/____ @ ______ a.m./p.m.

AREA #______________

Item	Evaluation Criteria	Status: Pass/ Fail	Observations	Recommendations (or RARER No.)
Agitator	Integrity. Operability.			
Nitrogen Blanket System (in Organic Treatment Pumpable Waste Storage Area)	Supply. Operability.			
Ventilation Fans	Operability.			

Comments: ____

____

____

____

Date: 10/15/90
Revision: 2

FLORIDA FIRST PROCESSING, L.P.

WEEKLY INSPECTION ELEMENT STATUS REPORT
GENERAL FACILITY

Name of Inspector ________________ Date/Time of Inspection: ___/___/___ @ _____ a.m./p.m.

Item	Evaluation Criteria	Status: Pass/ Fail	Observations	Recommendations (or RARER No.)
Boundary Fence	Condition and integrity of chain-link and barbed wire.			
Side Gates and Locks	Condition and operability.			
Emergency Lighting	Operability of emergency generator.			
Emergency Eyewash/Safety Shower	Operability, accessibility, location signs.			
	Sufficient water pressure and flow.			
Air Horn	Accessibility.			
Evacuation Alarms	Accessibility and operability.			
Spill Clean-up Equipment	Condition, accessibility, and supply of • recovery drums; • absorbent material.			
Oxygen/Explosivity Meter	Operability, sufficient charge.			
Emergency Motion Detector	Operability, sufficient charge			

Comments: ____

____

____

____

DAILY INSPECTIO[illegible]LEMENT STATUS REPORT
INORGANIC TREATMENT SYSTEM

Name of Inspector ____________________ Date/Time of Inspection: ___/___/___ @ _____ a.m./p.m.

Item	Evaluation Criteria	Status: Pass/ Fail	Observations	Recommendations (or RARER No.)
Secondary Containment System	Integrity of base.			
	Absence of spills or accumulated liquids on base or in sumps.			
	Proper removal of debris, clean-up residue.			
	Absence of evidence of seepage outside containment area (e.g., discoloration, dead vegetation).			
Reactors, dissolving and filtrate tanks	Operation of overfill control and leak detection systems.			
	Integrity of reactor exteriors.			
Emission Control System	Functioning and integrity of scrubber and fans.			

Comments: ____

____

____

____

Date: 10/15/90
Revision: 2

FLORIDA F[illegible] PROCESSING, L.P.

MONTHLY INSPECTION ELEMENT STATUS REPORT
GENERAL FACILITY

Name of Inspector ______________________ Date/Time of Inspection: ___/___/___ @ _____ a.m./p.m.

Item	Evaluation Criteria	Status: Pass/ Fail	Observations	Recommendations (or RARER No.)
Warning Signs: "Danger, Authorized Personnel Only," "No Smoking"	Presence and readability at: • perimeter fence; • entrance; • facility.			
Facility Communications System	Operability of • intercom system; • telephones; • PA system; • emergency alarms.			
External Yard Lighting	Condition and operability.			
Interior Emergency Lighting	Condition and operability.			
Alternate Power Supply for Alarm System	Connection and adequate charge.			
Facility Water Supply for Fire Suppression [including Hydrants, Standpipes (if applicable), Pumps, etc.]	Operability. Sufficient flow and pressure.			
Automatic Water/Foam Sprinkler Fire Suppression Systems	Condition. Operability.			
Halon Fire Suppression System	Condition Operability.			

Comments: ____

Date: 10/15/90
Revision: 2

FLORIDA [illegible] PROCESSING, L.P. [illegible] 2 of 2

MONTHLY INSPECTION ELEMENT STATUS REPORT
GENERAL FACILITY
(continued)

Name of Inspector ______________________ Date/Time of Inspection: ___/___/___ @ _____ a.m./p.m.

Item	Evaluation Criteria	Status: Pass/ Fail	Observations	Recommendations (or RARER No.)
Fire Blankets	Adequate supply. Accessability. Condition.			
Fire Extinguishers (A, AB and BC)	Full charge on pressure gauge. Condition and unbroken seal. Location signs. Accessibility. Accuracy of inspection tags.			
Personal Protective Equipment (e.g., Goggles, Respirators, Gloves, Hardhats, Boots, Chemical-Resistant Suits)	Accessibility. Adequate supply. Location signs. Condition.			
First-Aid kit	Accessibility. Adequate stock. Condition. Supply replenished by outside contractor.			
Air-Purifying Respirators and Cartridges	Adequate supply. Condition.			
Self-Contained Breathing Apparatus and Emergency Oxygen Kits	Adequate air/oxygen charge. Accessibility. Location signs.			
Air Horn	Operability			

Comments: ____

TABLE H-1.2

REQUIRED TRAINING COURSES FOR HAZARDOUS WASTE MANAGEMENT PERSONNEL

JOB POSITION	TRAINING COURSE CODES[a]																		
	A	B	C	D	E	F	G	H	I	J	K	L	M	N	O	P	Q	R	S
1. Plant Manager	X	X	X	X	X	X	X	X	X	X	X	X	X	X	X	X	X	X	X
2. Chief Engineer	X	X	X	X	X	X	X	X	X	X	X	X	X	X	X	X	X	X	X
3. Environmental/Health and Safety Manager	X	X	X	X	X	X	X	X	X	X	X	X	X	X	X	X	X	X	X
4. Emergency Coordinator	X	X	X	X	X	X	X	X	X	X	X	X	X	X	X	X	X	X	X
5. Laboratory Manager	X	X					X	X	X				X	X	X	X		X	X
6. Chemist	X	X					X	X					X	X	X	X		X	
7. Laboratory Technician	X	X					X	X	X				X	X	X	X		X	
8. Incinerator Engineer	X	X		X		X	X	X	X	X	X	X	X	X	X	X	X	X	X
9. Inorganics Engineer	X	X		X		X	X	X	X	X	X	X	X	X	X	X	X	X	X
10. General Engineer	X	X	X	X	X	X	X	X	X	X	X	X	X	X	X	X	X	X	X
11. Incinerator Supervisor	X	X		X		X	X	X	X	X	X	X	X	X	X	X	X	X	X
12. Inorganics Supervisor	X	X		X		X	X	X	X	X	X	X	X	X	X	X	X	X	X
13. Incinerator Maintenance Foreman	X	X		X		X	X	X	X	X	X	X	X	X	X	X	X	X	X
14. Inorganics Maintenance Foreman	X	X		X		X	X	X	X	X	X	X	X	X	X	X	X	X	X
15. Incinerator Maintenance Worker	X	X		X		X	X	X	X	X	X	X	X	X	X	X	X	X	X
16. Inorganics Maintenance Worker	X	X		X		X	X	X	X	X	X	X	X	X	X	X	X	X	X
17. Incinerator Operator	X	X		X		X	X	X		X	X		X	X	X	X	X	X	X
18. Inorganics Operator	X	X		X		X	X	X		X	X	X	X	X	X	X	X	X	
19. Waste Receiving Engineer/Scientist	X	X		X		X	X	X					X	X	X	X		X	X
20. Waste Receiving Assistant	X	X		X			X	X					X	X	X	X	X	X	
21. Load/Unload Supervisor	X	X	X	X	X	X	X	X		X	X		X	X	X	X	X	X	X
22. Bulk Receiving Worker	X	X	X		X	X	X	X		X	X		X	X	X	X	X	X	
23. Drum Receiving/Unloading Worker	X	X	X	X	X	X	X	X		X	X		X	X	X	X	X	X	
24. Storage Area Worker	X	X	X	X	X	X	X	X		X	X		X	X	X	X	X	X	
25. Forklift Driver	X	X		X	X		X	X					X	X	X	X	X	X	
26. Tank Truck/Car Operator	X	X	X				X	X		X	X		X	X	X	X	X	X	
27. Security Officers	X	X					X	X		X			X	X	X	X	X	X	
28. General Maintenance Staff	X				X					X			X	X	X	X	X	X	
29. Office Staff[b]	X												X	X	X	X		X	

---

[a] See Table H-1.1 (or Table H-1.3) for explanation of Training Course Codes.

[b] Includes accounting, administrative and clerical staff, etc.

2.0 FACILITY DESCRIPTION

The Florida First Processing, L.P. will be located along Fort Green Road between the towns of Brewster and Baird in Polk County, Florida.

The property on which the facility will be located is generally flat, with a slight slope to the west. The hazardous waste operations at the facility will be located outside of the 100-year flood plain. Land in the vicinity of the facility is generally used for phosphate mining. Additional details of the location of the facility relative to floodplain areas, surface water, surrounding land use, and other topographic features are given in Section B of this permit application.

The fully developed facility will receive virtually any type of hazardous wastes, with the exception of PCB waste, radioactive and hazardous mixed wastes that do not meet the requirements of 40 CFR 261.4(a) (4), explosive wastes, ignitable compressed gases, dioxin-containing wastes, pentachlorophenol production wastes, unmanifested wastes or other wastes that the Plant Manager deems cannot be properly or safely managed. Shock-sensitive and air-reactive wastes may be accepted on a case-by-case basis only after extensive testing and evaluation. The complete description of hazardous wastes to be handled at the facility is provided in Section C of this application. Wastes will be received in bulk shipments (e.g., tanker trucks and railroad tank cars) or in loads of containers (e.g., 55-gallon drums, and roll-off boxes on trucks or railroad cars). FFP-LP is designed to handle waste liquids, sludges and solids.

Containerized wastes will be managed through the container processing system which will involve a conveyor system, container emptying stations, and container shredder. Bulk pumpable wastes will be transferred to storage tanks, or may be pumped directly into the inorganic waste treatment plant or the incinerator. The details of the waste management units and procedures at FFP-LP, including the size and dimensions of each unit/area, design capacity, types of ancillary equipment, and secondary containment systems, are provided in Section D of this permit application.

3.0 MAXIMUM EXTENT OF OPERATIONS

The extent of the facility operations at any given time will be limited by the storage capacity of the container staging areas and tank farms, and the process rate capacity of the inorganic waste treatment plant and the incinerator. The design features of each of these units are provided in Section D of this application.

The maximum RCRA-regulated hazardous waste inventory stored at the Florida First Processing, L.P. will be 413,600 gallons contained in the equivalent of 7,520 55-gallon drums and 769,475 gallons contained in 48 tanks (727,475 gallons in 42 storage tanks and 42,000 gallons in 6 reactors and dissolving tanks). The Organic Treatment Container Staging Area will hold 380,160 gallons, the Inorganic Treatment Container Staging Area will hold 32,120 gallons, and the Inorganic Treatment Container Processing Area will hold 1,320 gallons in containers. Table 3-1 and 3-2 list the storage capacity in facility tanks. A maximum of 16,132 yd^3 of process residuals generated on site will be stored at the loadout areas described in Section D.6 of this permit application.

The first option for closure is to have all of this hazardous waste inventory processed on-site at the inorganic waste treatment plant and the incinerator. The alternative procedure, which is used as a high-cost scenario in the Closure Cost Estimate, assumes that all organic wastes will be sent off-site for disposal or treatment. Residues from waste treatment of the maximum inorganic waste inventory will be sent off-site to an appropriate permitted hazardous waste treatment, storage, and disposal facility. Further details of the methods to be used for removing, transporting, treating, storing or disposing of all hazardous wastes are given in Section 4.0. Estimates of the maximum inventory of on-site hazardous wastes and the description of closure procedures are given in accordance with 40 CFR 264.112(b)(3).

THIS TABLE HAS BE[illegible]REVISED IN ITS ENTIRETY

TABLE 3-1
RCRA "ORGANIC" TANKS

Tank Numbers	Tank Description	Construction Material	Capacity	Process Code	Design Code	Min. Shell Thickness	Reference Drawing
	<u>Organic Treatment Container Processing Area</u>						
T-09	Drummed Pumpable Waste Receiver	Carbon Steel	2,000 gal	S02	API-620	3/16 in **	8813-00-M-018
	<u>Organic Treatment Pumpable Waste Storage Area</u>						
T-10	Organic Receiving/Holding Tank	Carbon Steel	19,500 gal	S02	API-620	3/16 in **	8813-00-M-014
T-11	Organic Receiving/Holding Tank	Carbon Steel	19,500 gal	S02	API-620	3/16 in **	8813-00-M-014
T-12	Organic Receiving/Holding Tank	Carbon Steel	19,500 gal	S02	API-620	3/16 in **	8813-00-M-014
T-13	Organic Receiving/Holding Tank	Carbon Steel	19,500 gal	S02	API-620	3/16 in **	8813-00-M-014
T-14	Organic Receiving/Holding Tank	Carbon Steel	19,500 gal	S02	API-620	3/16 in **	8813-00-M-014
T-15	Organic Receiving/Holding Tank	Carbon Steel	19,500 gal	S02	API-620	3/16 in **	8813-00-M-014
T-16	Sludge Holding Tank	Carbon Steel	19,500 gal	S02	API-620	3/16 in **	8813-00-M-014
T-17	Sludge Feed Tank	Carbon Steel	6,000 gal	S02	API-620	3/16 in **	8813-00-M-014
T-18	Low-Btu Liquid Feed Tank	Carbon Steel	19,500 gal	S02	API-620	3/16 in **	8813-00-M-014
T-19	High-Btu Liquid Feed Tank	Carbon Steel	19,500 gal	S02	API-620	3/16 in **	8813-00-M-014
T-20	High-Btu Liquid Feed Tank	Carbon Steel	19,500 gal	S02	API-620	3/16 in **	8813-00-M-014
	<u>Bulk Solids Handling Area</u>						
B-01 *	Shredded Material Tank	Concrete	25 yd^3	S02	ACI-318	N/A	8813-00-M-017
B-02 *	Bulk Solids Receiving Tank	Concrete	50 yd^3	S02	ACI-318	N/A	8813-00-M-017
B-03 *	Bulk Solids Receiving Tank	Concrete	50 yd^3	S02	ACI-318	N/A	8813-00-M-017
B-04 *	Bulk Solids Receiving Tank	Concrete	50 yd^3	S02	ACI-318	N/A	8813-00-M-017
B-05 *	Bulk Solids Mixed Feed Tank	Concrete	25 yd^3	S02	ACI-318	N/A	8813-00-M-017

* These units are not tanks regulated under 40 CFR 264.193 Subpart J since they handle wastes without free liquids.

** Does not include corrosion allowance.

THIS TABLE HAS BEEN [illegible]VISED IN ITS ENTIRETY

TABLE 3-2
RCRA "INORGANIC" TANKS

Tank Numbers	Tank Description	Construction Material	Capacity	Process Code	Design Code	Min. Shell Thickness	Reference Drawing
	<u>Dried Solids System</u>						
T-01	Dried Solids Storage Silo	Carbon Steel *	5,000 ft^3	S02	N/A **	3/16 in ***	8813-00-M-026
	<u>Inorganic Treatment Container Pump Station Area</u>						
T-21	Alkaline/Cyanide Drum Waste Receiving Tank	FRP	2,000 gal	S02	NBS-PS 15-69	1/4 in	8813-00-M-032
T-22	Acidic/Chromate Drum Waste Receiving Tank	FRP	2,000 gal	S02	NBS-PS 15-69	1/4 in	8813-00-M-032
	<u>Non-Pumpable Waste Handling Area</u>						
T-07	Alkaline/Cyanide Waste Dissolving Tank	Carbon Steel *	5,000 gal	T01	N/A **	3/16 in ***	8813-00-M-031
T-08	Acidic/Chromate Waste Dissolving Tank	Carbon Steel *	5,000 gal	T01	N/A **	3/16 in ***	8813-00-M-031
T-23	Dissolved Alkaline/Cyanide Waste Holding Tank	FRP	8,000 gal	S02	NBS-PS 15-69	5/16 in	8813-00-M-031
T-24	Dissolved Acidic/Chromate Waste Holding Tank	FRP	8,000 gal	S02	NBS-PS 15-69	5/16 in	8813-00-M-031
	<u>Inorganic Treatment Pumpable Waste Storage Area</u>						
T-25	Chromate Waste Storage Tank	FRP	8,000 gal	S02	NBS-PS 15-69	5/16 in	8813-00-M-030
T-26	Chromate Waste Storage Tank	FRP	8,000 gal	S02	NBS-PS 15-69	5/16 in	8813-00-M-030
T-27	Chromate Waste Storage Tank	FRP	8,000 gal	S02	NBS-PS 15-69	5/16 in	8813-00-M-030
T-28	Chromate Waste Storage Tank	FRP	8,000 gal	S02	NBS-PS 15-69	5/16 in	8813-00-M-030
T-29	Chromate Waste Storage Tank	FRP	8,000 gal	S02	NBS-PS 15-69	5/16 in	8813-00-M-030
T-30	Chromate Waste Storage Tank	FRP	8,000 gal	S02	NBS-PS 15-69	5/16 in	8813-00-M-030
T-31	Acidic Waste Storage Tank	FRP	8,000 gal	S02	NBS-PS 15-69	5/16 in	8813-00-M-030
T-32	Acidic Waste Storage Tank	FRP	8,000 gal	S02	NBS-PS 15-69	5/16 in	8813-00-M-030
T-33	Acidic Waste Storage Tank	FRP	8,000 gal	S02	NBS-PS 15-69	5/16 in	8813-00-M-030
T-34	Acidic Waste Storage Tank	FRP	8,000 gal	S02	NBS-PS 15-69	5/16 in	8813-00-M-030
T-35	Alkaline Waste Storage Tank	FRP	8,000 gal	S02	NBS-PS 15-69	5/16 in	8813-00-M-030
T-36	Alkaline Waste Storage Tank	FRP	8,000 gal	S02	NBS-PS 15-69	5/16 in	8813-00-M-030
T-37	Cyanide Waste Storage Tank	FRP	8,000 gal	S02	NBS-PS 15-69	5/16 in	8813-00-M-030
T-38	Cyanide Waste Storage Tank	FRP	8,000 gal	S02	NBS-PS 15-69	5/16 in	8813-00-M-030

* Coated for corrosion protection; i.e., epoxy coated or equivalent.

** Atmospheric tanks for which API-650 may be used as a reference. API-650 has been applied by numerous facilities to tanks used for purposes other than oil storage, and adjustments have been made using good engineering judgement.

*** Does not include corrosion allowance.

THIS TABLE HAS BEEN [illegible]VISED IN ITS ENTIRETY

TABLE 3-2
RCRA "INORGANIC" TANKS (CONT.)

Tank Numbers	Tank Description	Construction Material	Capacity	Process Code	Design Code	Min. Shell Thickness	Reference Drawing
	Reactor Tank Area						
T-44	Multi-purpose Reactor	FRP	8,000 gal	T01	NBS-PS 15-69	5/16 in	8813-00-M-035
T-45	Multi-purpose Reactor	FRP	8,000 gal	T01	NBS-PS 15-69	5/16 in	8813-00-M-035
T-46	Multi-purpose Reactor	FRP	8,000 gal	T01	NBS-PS 15-69	5/16 in	8813-00-M-035
T-47	Cyanide Reactor	FRP	8,000 gal	T01	NBS-PS 15-69	5/16 in	8813-00-M-035
	Sludge Dewatering Area						
T-48	Filter Feed Tank	FRP	25,000 gal	S02	NBS-PS 15-69	5/16 in	8813-00-M-034
T-49	Filter Feed Tank	FRP	25,000 gal	S02	NBS-PS 15-69	5/16 in	8813-00-M-034
T-50	Filtrate Holding Tank	FRP	8,000 gal	S02	NBS-PS 15-69	5/16 in	8813-00-M-034
T-51	Filtrate Holding Tank	FRP	8,000 gal	S02	NBS-PS 15-69	5/16 in	8813-00-M-034
T-52	Filtrate Buffer Tank	FRP	240,000 gal	S02	NBS-PS 15-69	3/8 in	8813-00-M-036
	Stabilization Feed System						
T-54 **	Waste Receiving Bin	Concrete	35 yd^3	S02	ACI-318-83	N/A	8813-00-M-024

** This unit is not a tank regulated under 40 CFR 264.193 Subpart J since it handles wastes without free liquids.

Alternatively, all organic wastes in containers and tanks, and empty containers, will be sent off-site to appropriate permitted treatment, storage, and disposal facilities.

The container handling/processing system and the tanks, once emptied, will be decontaminated along with ancillary equipment and secondary containment structures according to the procedures outlined in Section 4.1 and 4.2. All storage tanks, ancillary equipment, and secondary containment structures will be flushed or washed down with three rinses of appropriate fluids as described in the following sections. Rinse waters from all three decontamination flushings will be collected and disposed of as hazardous wastes. Decontamination rinse waters (rinseates) and residues from the organic waste areas will be incinerated on-site. Decontamination rinse waters from the inorganic waste areas will be processed through the inorganic waste treatment reactors. Another option will be to dispose the decontamination rinse waters from the organic and inorganic waste areas off-site at approved facilities. This high-cost alternative which assumes that the incinerator is inoperable at closure is used in estimating the closure costs provided in Appendix I-2.

The inorganic treatment reactors will be decontaminated according to the procedures outlined in Section 4.3. The incineration system will be decontaminated according to the steps given in Section 4.4. The facility laboratory will then be cleared and decontaminated using the procedures in Section 4.5. All ancillary equipment and secondary containment systems will be decontaminated along with their related process or treatment units. The decontamination rinse waters and residues will be disposed as hazardous waste at an appropriate off-site facility.

will be incinerated on-site along with other decontamination rinse waters or will be taken off-site for disposal at an appropriate permitted facility.

The tanks and ancillary equipment will be left to air dry for a few days. The tanks and all ancillary piping, fittings and pumping equipment decontaminated along with the tanks will be left in place. Alternatively, the tanks and ancillary equipment will be disconnected, removed, and sold for re-use or scrap once they are dry. Salvage revenues are not credited in the Closure Cost Estimate in Appendix I-2.

4.1.3 Secondary Containment Area Decontamination

Any remaining hazardous waste residue such as contaminated rags will be removed from these secondary containment areas at the container staging or processing areas. All process equipment (e.g., shredders, conveyors), pumps, ancillary equipment, and secondary containment structures (e.g., dike walls, floors, sumps) will be flushed with one detergent solution rinse and two clean water rinses. About 4 gallons of residuals per square foot of surface will be generated from the high-pressure cleaning process. Rinse waters from the three flushings will be collected along with the decontamination rinse waters and residues from other waste management areas and disposed as hazardous waste at an appropriate permitted facility.

4.1.4 Decontamination Verification

~~To demonstrate that an acceptable level of decontamination is achieved, a sample of rinse waters from the third rinse of each unit and area will be analyzed. Samples taken from units or areas used for Inorganic Treatment will be analyzed for EP Toxic Metals. If the samples do not contain hazardous~~

~~constituents above EP Toxic levels (as defined by 40 CFR 261.24), the corresponding units or areas will be regarded as clean. Samples taken from units or areas used for Organic Treatment will be subjected to a gas chromatographic scan to confirm the absence of organic waste residue. If any spikes of statistical significance are observed, the constituent causing each spike will be identified to determine their level of toxicity. Parameters of concern for which each organic sample will be analyzed include total organic carbon, Polynuclear Aromatic Hydrocarbons, and Pesticides. The analytical methods will be those that are approved in the most recent edition of U.S. EPA, "Test Methods for Evaluating Solid Waste, Physical/Chemical Methods," SW-846, Office of Water and Waste Management, Washington, DC.~~

~~The unit or area with a statistically significant concentration of hazardous constituents will be further rinsed until analytical results indicate that it is decontaminated.~~

Any tanks that are decommissioned will be verified for decontamination as follows; after the final rinse, an aliquot of distilled water will be sprayed into the tank, collected and analyzed. This aliquot will be required to meet drinking water standards as the criteria for determining that the tank is clean.

Secondary containment areas will be verified for decontamination as follows; each containment area will then be tested to determine whether it is clean by removing solid samples of the concrete (1-inch deep cores from 5-152 places in each area), homogenizing each sample, and then analyzing each sample in the laboratory. Each area will be determined to be clean if the concentrations of all contaminants tested for are found to be below the RCRA Clean Closure Levels operative at the time of closure.

Alternatively, units such as tanks may be dismantled and disposed at an appropriate off-site permitted facility.

use or scrap once they are dry. Salvage revenues are not credited in the Closure Cost Estimate in Appendix I-2.

4.2.3 Secondary Containment Area Decontamination

After decontaminating the tanks and ancillary equipment, the secondary containment system will be examined for evidence of contamination or spills. Secondary containment structures (e.g., dike walls, floors, sumps) will be scrubbed down and pressure-washed with detergent, and then flushed with two other clean water rinses. The residuals generated during this high-pressure cleaning will amount to approximately 4 gallons per square foot of surface. The washing solution and rinse waters from the organic tank farms will be transferred to the on-site incinerator for processing, and those from the inorganic tank farm will be transported off-site to an appropriate permitted treatment, storage, and disposal facility. Another option would be to transport the residuals from both tank farms to off-site hazardous waste facilities.

4.2.4 Decontamination Verification

~~To demonstrate that an acceptable level of decontamination is achieved, a sample of rinse waters from the third rinse of each unit and area will be analyzed. Samples taken from units or areas used for Inorganic Treatment will be analyzed for EP Toxic Metals. If the samples do not contain hazardous constituents above EP Toxic levels (as defined by 40 CFR 261.24), the corresponding units or areas will be regarded as clean. Samples taken from units or areas used for Organic Treatment will be subjected to a gas chromatographic scan to confirm the absence of organic waste residue. If any~~

~~spikes of statistical significance are observed, the constituent causing each spike will be identified to determine their level of toxicity. Parameters of concern for which each organic sample will be analyzed include total organic carbon, Polynuclear Aromatic Hydrocarbons, and Pesticides. The analytical methods will be those that are approved in the most recent edition of U.S. EPA, "Test Methods for Evaluating Solid Waste, Physical/Chemical Methods," SW-846, Office of Water and Waste Management, Washington, DC.~~

~~The unit or area with a statistically significant concentration of hazardous constituents will be further rinsed until analytical results indicate that it is decontaminated.~~

Any tanks that are decommissioned will be verified for decontamination as follows; after the final rinse, an aliquot of distilled water will be sprayed into the tank, collected and analyzed. This aliquot will be required to meet drinking water standards as the criteria for determining that the tank is clean.

Secondary containment areas will be verified for decontamination as follows; each containment area will then be tested to determine whether it is clean by removing solid samples of the concrete (1-inch deep cores from 5 places in each area), homogenizing each sample, and then analyzing each sample in the laboratory. Each area will be determined to be clean if the concentrations of all contaminants tested for are found to be below the RCRA Clean Closure Levels operative at the time of closure.

Alternatively, units such as tanks may be dismantled and disposed at an appropriate off-site permitted facility.

4.3.3 Decontamination Verification

~~To demonstrate that an acceptable level of decontamination is achieved, a sample of rinse waters from the third rinse of each unit and area will be analyzed. Samples taken form the non-RCRA hazardous units, i.e., the Inorganic Treatment Reagent Storage Tanks and Area, will be analyzed for pH to ensure that the units are cleaned up of highly acidic or basic residues. Samples taken from units or areas used for Inorganic Treatment will be analyzed for EP Toxic Metals. If the samples do not contain hazardous constituents above EP Toxic levels (as defined by 40 CFR 261.24), the corresponding units or areas will be regarded as clean. The analytical methods will be those that are approved in the most recent edition of U.S. EPA, "Test Methods for Evaluating Solid Waste, Physical/Chemical Methods," SW-846, Office of Water and Waste Management, Washington, DC.~~

~~The unit or area with a statistically significant concentration of hazardous constituents will be further rinsed until analytical results indicate that it is decontaminated.~~

Any tanks that are decommissioned will be verified for decontamination as follows; after the final rinse, an aliquot of distilled water will be sprayed into the tank, collected and analyzed. This aliquot will be required to meet drinking water standards as the criteria for determining that the tank is clean.

Secondary containment areas will be verified for decontamination as follows; each containment area will then be tested to determine whether it is clean by removing solid samples of the concrete (1-inch deep cores from 5 places in each area), homogenizing each sample, and then analyzing each sample in the laboratory. Each area will be determined to be clean if the concentrations of all contaminants tested for are found to be below the RCRA Clean Closure Levels operative at the time of closure.

Alternatively, units such as tanks may be dismantled and disposed at an appropriate off-site permitted facility.

fuel oil will be burned in the incinerator for 48 hours to ensure that all hazardous waste constituents remaining in the kiln and secondary combustion chamber are completely destroyed. No ash is expected to be generated into the kiln ash hopper during this clean burning period. Any particulate matter which may be produced will be captured in the air pollution control system. That control system will be decontaminated according to the procedures in Section 4.4.2.

The kiln ash conveyor will be decontaminated as part of the incineration unit decontamination process. The kiln ash conveyor will be flushed with one detergent solution rinse and two clean water rises. This will generate approximately 4 gallons of residuals per square foot of surface in the high pressure cleaning process. Rinse water from the three flushings will be collected along with the decontamination rinse waters and residues from other waste management areas and disposed as hazardous waste at an appropriate permitted facility.

Another scenario that the facility is prepared to respond to is if the incineration system is inoperable at the time of closure. This high-cost scenario is used as a basis for the cost estimates in Appendix I-2. In that case, the feed line flushings will be collected and disposed at a permitted off-site facility. The incinerator will be dismantled and landfilled as equipment contaminated with hazardous wastes at RCRA disposal facility.

4.4.2 Air Pollution Control System Decontamination

After the flushing oils and rinseates have been burned or appropriately disposed and the incineration system shut down, the spray dryer and scrubber water system will be drained. Fabric filter ash and fabric filters will be removed and disposed at an off-site hazardous waste management facility. The induced draft fan will be left undisturbed. The complete air pollution control system will then be thoroughly flushed with three rinses of clean water and left in place at the facility. All the drained fluids and rinse waters will be collected for off-site disposal at approved facilities.

surface decontaminated. The rinsewater and residues will be collected and disposed as hazardous wastes at an appropriate off-site facility.

4.5.3 Decontamination Verification

~~To demonstrate that an acceptable level of decontamination is achieved, a sample of rinse waters from the third rinse of the laboratory will be analyzed. Samples will first be analyzed for EP Toxic Metals. If the samples do not contain hazardous constituents above EP Toxic levels (as defined by 40 CFR 261.24), the laboratory will be regarded as clean with regard to inorganic wastes. Samples will also be subjected to a gas chromatographic scan to confirm the absence of organic waste residues. If any spikes of statistical significance are observed, the constituent causing each spike will be identified to determine their level of toxicity. Parameters of concern for which each organic sample will be analyzed include Total Organic Carbon, Polynuclear Aromatic Hydrocarbons, and Pesticides. The analytical methods will be those that are approved in the most recent edition of U.S. EPA, "Test Methods for Evaluating Solid Waste, Physical/Chemical Methods," SW-846, Office of Water and Waste Management, Washington, DC.~~

~~If a statistically significant concentration of hazardous constituents is detected, the laboratory will be further rinsed until analytical results indicate that it is decontaminated.~~

Any tanks that are decommissioned will be verified for decontamination as follows; after the final rinse, an aliquot of distilled water will be sprayed into the tank, collected and analyzed. This aliquot will be required to meet drinking water standards as the criteria for determining that the tank is clean.

Secondary containment areas will be verified for decontamination as follows; each containment area will then be tested to determine whether it is clean by removing solid samples of the concrete (1-inch deep cores from 5 places in each area), homogenizing each sample, and then analyzing each sample in the laboratory. Each area will be determined to be clean if the concentrations of all contaminants tested for are found to be below the RCRA Clean Closure Levels operative at the time of closure.

4.6 LOADOUT AREAS AND TRUCK/RAILROAD CAR UNLOADING AREAS

The loadout areas including ash storage units will receive all the process residuals (e.g., kiln ash, dried solids from the spray dryer absorber and the bag filters, and filter cake) generated during site operations and activities to close the process units. The unloading/loading areas will be used to receive the final waste load and to ship out decontamination residues. The following procedures will be followed in decontaminating these loadout areas and the truck/railroad car unloading areas. Closure of a specific area or unit within this process area will be conducted according to these procedures on a limited scale, e.g., within an isolated secondary containment area. Closure of the facility will involve all the steps sequentially provided in Sections 4.1 through 4.7 and graphically represented in Figure 4-1.

4.6.1 Residual Management

All residuals will be loaded onto trailer trucks or railcars for shipment off-site to appropriate storage, and disposal facilities. Careful attention will be paid so that the concrete bases and secondary containment systems are clean of any residues. If necessary, remnants will be scraped and brushed off from the surfaces of the loadout areas and loading stations.

4.6.2 Secondary Containment Area Decontamination

Once the residuals are removed from any of these areas, that particular area will be ready for decontamination. Each of the loadout areas will be similarly cleaned after they are emptied. The loading stations will already be empty and ready for decontamination since no residuals are staged there. A high-pressure cleaning system will be used to rinse the areas once with hot detergent and then twice with clean water. The resulting rinse waters will be approximately 4 gallons per square foot of surface. The loadout areas and loading stations will be considered decontaminated once the rinse waters and residuals are transferred from these areas to appropriate off-site treatment, storage, and disposal facilities.

4.6.3 Decontamination Verification

~~To demonstrate that an acceptable level of decontamination is achieved, a sample of rinse waters from the third rinse of each area will be analyzed. Samples taken form the non-RCRA hazardous areas, e.g., the Inorganic Treatment Reagent Unloading Area, will be analyzed for pH to ensure that the area is cleaned up of highly acidic or basic residues. Samples taken from areas used for Inorganic Treatment will be analyzed for EP Toxic Metals. If the samples do not contain hazardous constituents above EP Toxic levels (as defined by 40 CFR 261.24), the corresponding areas will be regarded as clean. Samples taken from areas used for Organic Treatment will be subjected to a gas chromatographic scan to confirm the absence of organic waste residue. If any spikes of statistical significance are observed, the constituent causing each spike will be identified to determine their level of toxicity. Parameters of concern for which each organic sample will be analyzed include Total Organic Carbon, Polynuclear Aromatic Hydrocarbons, and Pesticides. The analytical methods will be those that are approved in the most recent edition of U.S. EPA, "Test Methods for Evaluating Solid Waste, Physical/Chemical Methods," SW-846, Office of Water and Waste Management, Washington, DC.~~

~~The areas with a statistically significant concentration of hazardous constituents will be further rinsed until analytical results indicate that they are decontaminated.~~

Any tanks that are decommissioned will be verified for decontamination as follows; after the final rinse, an aliquot of distilled water will be sprayed into the tank, collected and analyzed. This aliquot will be required to meet drinking water standards as the criteria for determining that the tank is clean.

Secondary containment areas will be verified for decontamination as follows; each containment area will then be tested to determine whether it is clean by removing solid samples of the concrete (1-inch deep cores from 5 places in each area), homogenizing each sample, and then analyzing each sample in the laboratory. Each area will be determined to be clean if the concentrations of all contaminants tested for are found to be below the RCRA Clean Closure Levels operative at the time of closure.

SECTION J

FEDERAL AND STATE LAWS

J.1 FEDERAL LAWS

Florida First Processing, L.P. (FFP-LP) does not believe that it is subject to any of the following federal laws with respect to its facility: the Wild and Scenic Rivers Act (16 U.S.C. 1273 *et seq.*), the National Historic Preservation Act of 1966 (16 U.S.C. 470 *et seq.*), ~~the Endangered Species Act (16 U.S.C. 1531 et seq.),~~ the Coastal Zone Management Act (16 U.S.C. 1451 *et seq.*), or the Fish and Wildlife Coordination Act (16 U.S.C. 661 *et seq.*). This information is provided in accordance with 40 CFR 270.14(b)(20) and 40 CFR 270.3, both incorporated by reference in F.A.C. 17-730.200.

FFP-LP recognizes it is subject to the Endangered Species Act (16 U.S.C. 1531 *et seq.)* due to the recent nesting of a pair of bald eagles in the southern portion of the proposed site. FFP-LP is undertaking appropriate actions and site modifications to protect the eagles in accordance with federal and state regulations. Accordingly, FFP-LP will submit a bald eagle management plan to obtain a "Letter of No Objection" from the Florida Game and Fresh Water Fish Commission. A "Letter of No Objection" is expected by the end of December 1990.

J.2 STATE LAWS

The FFP-LP facility is not a hazardous waste landfill, and hence is not subject to the restrictions of Florida Statutes Title 29 Section 403.7222. This RCRA Part B Permit application addresses air permit requirements in Section L, as directed by the Florida Department of Environmental Regulation; both RCRA and air permit requirements will be reviewed simultaneously. With regard to water laws and NPDES permits, there will be no discharge of process wastewater from the facility. An investigation is being conducted into various sanitary wastewater treatment options.

SECTION K

CERTIFICATION

I certify under penalty of law that this document and all attachments were prepared under my direction or supervision in accordance with a system designed to assure that qualified personnel properly gather and evaluate the information submitted. Based on my inquiry of the person or persons who manage the system, or those persons directly responsible for gathering the information, the information submitted is, to the best of my knowledge and belief, true, accurate, and complete. I am aware that there are significant penalties for submitting false information, including the possibility of fine and imprisonment for knowing violations. Further, I agree to comply with the provisions of Chapter 403, Florida Statutes, and all rules and regulations of the Department of Environmental Regulation. It is understood that the permit is only transferable in accordance with Section 17-730, FAC, and, if granted a permit, the Department of Environmental Regulation will be notified prior to the sale or legal transfer of the permitted facility.

Dr. Anthony F. Moscati, Jr.
Managing Director, Florida First Processing, L.P.

Date: 10-28-90 Telephone No.: (703) 883-8270

[Section L has been replaced in its entirety]

SECTION L

AIR PERMIT APPLICATION

L.1 INTRODUCTION

Section L of this submission is an application for a permit to construct air emissions sources and air pollution control systems associated with a RCRA hazardous waste incinerator, an inorganic waste treatment system, and associated waste and reagent storage and handling units, and ancillary equipment proposed to be constructed and operated in Polk County, Florida. This air permit application is submitted pursuant to F.A.C. 17-4.210 (Florida Rules on Permits).

Sections 2.0 and 3.0 of this air permit application present summaries of the Facility Description and Project Descriptions for the proposed incinerator, inorganic waste treatment system, associated waste and reagent storage and handling units, and ancillary equipment previously presented in Sections B and D of this application. Detailed descriptions appear in Sections B and D of the Application. Also included in this application are discussions of applicable air regulations (Section 4.0), air emissions and control systems (Section 5.0), and summaries of local meteorology, climatology, and ambient air quality (Section 6.0). Modeling results are presented in Section 7.0, and evaluation of metals emissions is discussed in Section 8.0

Ambient air quality dispersion modeling has been performed based on emissions data for the incinerator, inorganic waste treatment system, carbon adsorber/chiller system, fugitive particulate and organic vapor sources, and the steam boiler using local meteorological data. Modeling results are presented in Section 7.0 and

Appendices. Evaluation of metals and hydrogen chloride emissions from the incinerator has been performed in accordance with the Tier III methodology included in the EPA Draft Guidance on Metals and Hydrogen Chloride Controls from Hazardous Waste Incinerators, March, 1989. This analysis is based on the results of dispersion modeling for the incinerator presented in Section 7.0 and incinerator emissions data presented in Section 5.0. Results of the Tier III analysis are presented in Section 8.0.

F.A.C. 17-4.210 requires specific information to be included in the Application for Permit to Construct Air Pollution Sources. Tables L-1-1 and L-1-2 are a checklist and drawing reference list showing the location of each required item within this submission. Tables L-1-3, L-1-4, and L-1-5 list the air emissions point sources and fugitive organic vapor and particulate emission sources at the facility. Drawing M-006 in Appendix D-5 is a plot plan showing the location of air emissions point sources.

Appendices L-1 through L-18A are the required Florida DER Forms for Application for Permit to Construct Air Pollution Sources for the RCRA hazardous waste incinerator, inorganic waste treatment system, and associated waste and reagent-storage and handling units and ancillary equipment. Original forms signed by Dr. Anthony F. Moscati, Jr., Managing Director of FFP-LP, have been submitted to FDER in accordance with F.A.C.17-4.050 of the Florida Rules on Permits.

L.2 FACILITY DESCRIPTION

A description of the proposed facility is provided in Section B of this submission. The proposed facility consists of a hazardous waste incinerator, inorganic waste treatment system, and associated waste storage and handling

TABLE L-1-1

CHECKLIST OF ITEMS INCLUDED IN APPLICATION FOR PERMIT TO CONSTRUCT

Item	Reference
Engineering report covering plant description and operations	Section D, Section L, Part 3
Types and quantities of all wastes generated	Section C Section D Section L, Part 3
Treatment objectives and design criteria on which control system is based	Section D Section L, Part 3
Design efficiencies of proposed waste treatment facilities	Section D Section L, Part 5
Types of pollutants in treated effluents and emissions	Section D Section L, Part 5
Written guarantee to meet design criteria accepted by the State and applicable State rules and regulations	Section L, Att. 1 Section L, Att. 2
Specification of manner, nature, volume, and frequency of emission to be permitted	Section D Section L, Part 5
Specification of applicable emission standards, performance standards, and other applicable regulations	Section L, Part 4
Total process input rate and product weight	Section D
Proposed compliance test methods	Appendix D-6
Design details of air pollution control systems	Section D Section L Part 5 See Table L-1-2
Process flow diagrams	See Table L-1-2
Plot plan for proposed facility location (USGS map)	Section B See Table L-1-2
Plot plan of site topography	Section B See Table L-1-2
Plot plan for proposed facility processes	Section B See Table L-1-2

TABLE L-1-2

DRAWING REFERENCE LIST FOR APPLICATION FOR PERMIT TO CONSTRUCT

Drawing No.	Description of Drawing
Section B, Figure B.1	USGS Map (Plot plan for proposed facility location)
Section B, Figure B.3	Site Topographic Map
Section B, Figure B.4	Site plan (for proposed facility processes)
Appendix D-5, DWG 8813-00-M-006	Plot plan (showing proposed air emissions point sources and control systems)
Appendix D-5, DWG F-001	Incinerator block flow diagram
Appendix D-5, DWG F-004	Inorganic waste treatment system block flow diagram
Appendix D-5, DWG F-015, F-016	Organic waste treatment (incinerator) air pollution control system
Appendix D-5, DWG F-038	Inorganic waste treatment emission control system
Appendix D-5, DWG F-002	Organic waste receiving and handling block flow diagram
Appendix D-5, DWG F-003	Inorganic waste receiving and handling block flow diagram

TABLE L-1-3

LIST OF AIR EMISSIONS POINT SOURCES AT PROPOSED FACILITY

Item #	Source(s)	Control Device	Emission Point	Applicable Air Permit
1	Hazardous Waste Incinerator	SDA/Fabric Filter	Incinerator Stack	Hazardous Waste Incinerator Stack
2	Inorganic Waste Treatment System, Reagent Storage Area	Caustic Wet Scrubber	Scrubber stack	Inorganic Waste Treatment System
3	Organic Treatment Tank Truck Unloading Area	Tank Truck Unloading Area Carbon Adsorber	Carbon Adsorber Vent	Tank Truck Unloading Area
4	Organic Liquid Railroad Tank Car Unloading Area	Railroad Tank Car Unloading Area Carbon Adsorber	Carbon Adsorber Vent	Railroad Tank Car Unloading Area
5	Organic Liquid Storage Tanks	Rotary Kiln/SCC or Organic Treatment Emission Control System Stack	Incinerator Stack or Organic Treatment Emission Control System Stack	Organic Liquid Storage Tanks
6	Organic Bulk Solids Handling Area	Rotary Kiln/SCC or Organic Treatment Emission Control System Stack	Incinerator Stack or Organic Treatment Emission Control System Stack	Organic Solids Handling Area
7	Lime Storage Silo	Lime Storage Silo Fabric Filter	Fabric Filter Vent	Lime Storage Silo
8	Cement Storage Silo	Cement Storage Silo Fabric Filter	Fabric Filter Vent	Cement Storage Silo
9	Cement Day Silo	Cement Day Silo Fabric Filter	Fabric Filter Vent	Cement Day Silo
10	Flyash Storage Silo	Flyash Storage Silo Fabric Filter	Fabric Filter Vent	Flyash Storage Silo
11	Flyash Day Silo	Flyash Day Silo Fabric Filter	Fabric Filter Vent	Flyash Day Silo
12	Dried Solids Recycle Silo	Dried Solids Recycle Silo Fabric Filter	Fabric Filter Vent	Dried Solids Recycle Storage Silo
13	Dried Solids Storage Silo	Dried Solids Storage Silo Fabric Filter	Fabric Filter Vent	Dried Solids Storage Silo
14	Steam Boiler	Uncontrolled	Boiler Stack	Steam Boiler
15	Emergency Firewater Pump	Uncontrolled	Diesel Engine Exhaust Pipe	Backup Diesel Powered Firewater Pump
16	Emergency Power Generator	Uncontrolled	Diesel Engine Exhaust Pipe	Backup Diesel Generator
17	Fuel Oil ~~Tank~~ Storage Tank	Uncontrolled	Tank Vent	#2 Fuel Oil Storage Tank

TABLE L-1-3 (CONT.)

LIST OF AIR EMISSIONS POINT SOURCES AT PROPOSED FACILITY

Item #	Source(s)	Control Device	Emission Point	Applicable Air Permit
18	Stabilization Mixer and Flyash/Cement Weigh Hopper	Weigh Hopper Fabric Filter	Fabric Filter Vent	Stabilization Mixer and Flyash/ Cement Weigh Hopper
18A	Lime Slakers	Wet Scrubber	Slakers Vent	Lime Slakers

TABLE L-1-4 (Continued)

LIST OF FUGITIVE AIR EMISSIONS SOURCES AT PROPOSED FACILITY

Description of Fugitive Source	Operating Schedule		
	hours/day	days/year	
Transfer from the liquid waste feed header to receiving/holding tank (T-15)	8	365	2920
Transfer from receiving/handling tank (T-10), side or bottom draw, to the emptying header	8	365	
Transfer from receiving/handling tank (T-11), side or bottom draw, to the emptying header	8	365	
Transfer from receiving/handling tank (T-12), side or bottom draw, to the emptying header	8	365	
Transfer from receiving/handling tank (T-13), side or bottom draw, to the emptying header	8	365	
Transfer from receiving/handling tank (T-14), side or bottom draw, to the emptying header	8	365	
Transfer from receiving/handling tank (T-15), side or bottom draw, to the emptying header	8	365	
Transfer to the pumpable waste storage header using one of the Pumps P-09, P-10, or P-11	8	365	
Transfer of sludge to the kiln using Pump P-16	12	365	4380
Transfer from the sludge holding tank (T-16) to the emptying header	12	365	
Transfer from the waste feed header to the sludge feed tank (T-17)	12	365	
Transfer from the waste feed header to the sludge holding tank (T-16)	12	365	
Transfer from the sludge feed tank (T-17) to the emptying header	12	365	
Transfer from the pumpable waste storage feed header to the Low-Btu liquid feed tank (T-18)	8	365	
Transfer from the pumpable waste storage feed header to the High-Btu liquid feed tank (T-19)	8	365	

TABLE L-1-4 (Continued)

LIST OF FUGITIVE AIR EMISSIONS SOURCES AT PROPOSED FACILITY

Description of Fugitive Source	Operating Schedule		
	hours/day	days/year	
Transfer from the pumpable waste storage feed header to the High-Btu liquid feed tank (T-20)	8	365	2920
Transfer from Low-Btu liquid feed tank (T-18) by side draw off to kiln/SCC	24	365	
Transfer from Low-Btu liquid feed tank (T-18) by bottom draw off to kiln/SCC	24	365	8760
Transfer from High-Btu liquid feed tanks (T-19 or T-20) by side draw off to kiln/SCC	24	365	
Transfer from High-Btu liquid feed tank (T-19) to the emptying headers	24	365	
Transfer from High-Btu liquid feed tank (T-20) to the emptying headers	24	365	
Recirculation of Low-Btu liquid from kiln to Low-Btu liquid feed tank (T-18)	24	365	
Recirculation of High-Btu liquid from kiln to High-Btu liquid feed tank (T-19 or T-20)	24	365	
Transfer of fuel oil from fuel oil storage tank to the kiln/SCC T-60	24	365	
Transfer of ash quench liquid to filter feed tanks	24	365	

units and ancillary equipment, to be constructed and operated in Polk County, Florida. The facility will be located on Fort Green Road, 0.75 miles south of County Road 630. A plot plan of the proposed facility, a USGS map showing the topography of the area in a two mile radius around the proposed site, and a site topographic map are included in Section B. There are no significant topographic features or structures in the vicinity of the proposed site. The area in the vicinity of the site is classified as a rural area for the purposes of selecting parameters for dispersion modeling.

Wind roses for Tampa and Orlando airports, the two closest locations for which meteorological data are available, are included in Section 6 of this section. These data were recorded during the 31-year period 1948 through 1978. Site meteorology is discussed in Section 6 of this section.

L.3 PROCESS AND PROJECT DESCRIPTIONS

A description of the proposed RCRA hazardous waste incinerator, inorganic waste treatment system, and associated waste and reagent storage and handling units and ancillary equipment are included in Section D. The proposed hazardous waste incinerator consists of a rotary kiln, secondary combustion chamber, spray dryer absorber, fabric filter, fans, and stack. The waste storage and handling equipment associated with the incinerator includes organic liquid tanks, solid and sludge waste storage and handling units, and a tank vent system equipped with a carbon absorber/chiller system. The inorganic waste treatment system consists of feed tanks and reactors, waste and reagent storage and handling systems, and a tank vent system with wet caustic scrubber.

Design specifications and design drawings for the air emission sources and control systems are referenced in Section 1 of this section and also in

Section D. Information concerning operating procedures for the incinerator is included in the Trial Burn Plan in Appendix D-6.

L.4 REVIEW OF APPLICABLE AIR REGULATIONS

L.4.1 Introduction

Construction and operation of new air emissions sources in Florida are subject to both State and Federal air regulations and guidelines that present permitting requirements on new sources and specific emission standards for expected pollutant discharges. These regulations include:

- National Ambient Air Quality Standards (NAAQS) which have been establish by the EPA for specific criteria pollutants (40 CFR 50). Florida has also established Ambient Air Quality Standards (FLAAQS) for criteria pollutants (F.A.C. 17-2.300). State and Federal ambient air quality standards are applicable to all air emission sources located in the state;

- New Source Review (NSR) and Prevention of Significant Deterioration (PSD) requirements that apply to major new or modified sources located in NAAQS attainment areas (40 CFR 52 and F.A.C. 17-2.500). Best Available Control Technology (BACT) applies to emissions of PSD-regulated pollutants depending on the size and type of air pollution emission;

- New Source Performance Standards (NSPS) which establish emission standards for specific types of new sources (40 CFR 60);

- National Emission Standards for Hazardous AirPollutants (NESHAP) which establish emission standards for both new and existing sources. These regulations depend on the size and type of air emission source (40 CFR 61);

- Florida Emission Limiting and Performance Standards which limit the emissions of acid gases and particulate matter from specific types of sources (F.A.C. 17-2.600); and

- Florida Rules on Permits which establish requirements for the permit application which are applicable to all air emission sources located in the state (F.A.C. Chapters 17-2 and 17-4).

- Florida regulation FAC 17-2.620(1)(a), which requires that organic liquid storage and handling systems located in Florida be equipped with "known and existing vapor emission control devices or systems deemed necessary and ordered by the Department". Specific requirements applicable to the proposed incinerator are discussed in the following sections.

L.4.2 National and Florida Ambient Air Quality Standards (NAAQS and FLAAQS)

The Clean Air Act of 1970 requires the EPA to create standards for specific pollutants to protect the health and welfare of the public including sensitive population groups. EPA has promulgated standards for six pollutants: sulfur dioxide (SO_2), nitrogen dioxide (NO_x), carbon monoxide (CO), Photochemical oxidants measured as ozone (O_3), lead (Pb), and particulate concentration of particles smaller than 10 micrometers (PM-10). Florida has also promulgated Ambient Air Quality Standards (FLAAQS) which are substantially similar to the NAAQS.

The NAAQS and FLAAQS are shown in Table L-4-1. The standards are associated with various averaging periods. The primary standards are set to protect the health and welfare of special population such as children, people with respiratory illnesses, and the elderly; the secondary standards protect the health and welfare of the general public from secondary impacts to the plants, water, soils, buildings etc. The proposed incinerator is to be located in Polk County, Florida, which is an air quality attainment area for all criteria pollutants. The attainment status of Polk County and the surrounding counties is discussed further in Section 6.2.2.

The operation of the proposed hazardous waste incinerator, inorganic waste treatment system, and associated equipment will not cause any exceedance of any State or Federal ambient air quality standard, based on emissions estimates and air pollutant dispersion modeling. A description of the models

TABLE L-4-1

NATIONAL AND FLORIDA AMBIENT AIR QUALITY STANDARDS

Pollutant	Averaging Period	NAAQS* (ug/m^3)	FLAAQS (ug/m^3)
SO_2	3-hour	1300	1300
	24-hour	365(260)	260
	Annual	80(60)	60
PM-10	24-hour	260(150)	150
	Annual	75(60)	60
NO_2	Annual	100	100
CO	1-hour	40,000	40,000
	8-hour	10,000	10,000
Lead	3-month	1.5	1.5
Ozone	1-hour	235	235

* National Ambient Air Quality Standards (numbers in parentheses are secondary standards)

used and discussion of the modeling results is included in Section 7.0 of this section.

L.4.3 New Source Review (NSR) and Prevention of Significant Deterioration (PSD)

Florida regulations concerning New Source Review are contained in Part V of the Florida Air Pollution Rules. Regulations in F.A.C. 17-2.500 (Part V, Prevention of Significant Deterioration) are applicable to new major sources of emissions located in air quality attainment areas. F.A.C. 17-2.500(2)(d) defines a new major source as any source included in a major group or a source not included in a major group (Table 500-1 of the Florida Air Pollution Rules) that will emit more than 250 tons per year of any criteria pollutant except lead, or 5 tons per year of lead. F.A.C. 17-2.500(2)(d) (Part V) states that minor air emissions sources (i.e. source that are not major sources) are not subject to New Source Review requirements.

The proposed hazardous waste incinerator and inorganic waste treatment system are to be located in Polk County, Florida, which is an air quality attainment area for all criteria pollutants. Hazardous waste incinerators are not included in any major group in Table 500-1 and, based on the size of the proposed incinerator (75 MM Btu/hr heat input), it is not expected to emit more than 250 tons per year of any criteria pollutant, or more than 5 tons per year of lead. The incinerator is therefore a minor source of air emissions. The inorganic waste treatment system and associated equipment are also minor sources of air emissions, as are all other air emissions point sources and fugitive emissions sources at the proposed facility. New Source Review and compliance with PSD regulations is not required for minor air emissions sources. Air quality increment analysis and application of BACT are also not required for minor air emission sources in attainment areas.

L.4.4 New Source Performance Standards (NSPS)

The Clean Air Act requires the EPA to promulgate NSPS which are national standards for air emission from new stationary sources. Although standards have been promulgated for municipal waste incinerators, no standards have been set specifically for hazardous waste incinerators. New source performance standards are also not applicable to the inorganic waste treatment system, organic liquid storage tanks, or any other equipment at the proposed facility (40 CFR 60).

L.4.4.1 NSPS for Organic Liquid Storage Tanks

Subpart Kb of the Federal New Source Performance Standards (40 CFR 60.112b(a)), states that organic liquid storage tanks with a design capacity of greater than or equal to 75 cubic meters (equivalent to 19,812.9 U.S. gallons) are required to meet the VOC control technology requirements of Section 60.112b of the Subpart. All organic liquid storage tanks proposed to be constructed and operated at the FFP-LP facility have design capacities of 19,500 U.S. gallons or less, and are therefore exempt from control technology requirements under Subpart Kb. Design capacities for all organic liquid storage tanks are shown on the tank detail drawings included in Appendix D-3 of Section D of the Application and are summarized Table D-4-1 in Section D.

L.4.5 National Emission Standard for Hazardous Air Pollutants (NESHAP)

The NESHAP apply to both new and existing sources of hazardous air pollutants in the U.S. EPA has promulgated NESHAP for asbestos, benzene, beryllium, coke oven emissions, inorganic arsenic, mercury, radon-222, radionuclides, vinyl chloride, and equipment leaks (fugitive emission sources). The NESHAP that may apply to the proposed incinerator include beryllium, mercury, and benzene.

L.4.5.1 Beryllium

NESHAP regulations for beryllium are contained in 40 CFR 61 Subpart C (Sections 61.30 et. seq.). According to Section 61.30(a), the provisions of Subpart C are applicable to incinerators that process beryllium-containing waste. "Beryllium-containing waste" is defined in Sections 61.31(g) as:

> "...material contaminated with beryllium and/or beryllium compounds used or generated during any process or operation performed by a source subject to this subpart."

Sources subject to Subpart C are defined in Section 61.30(a) to include:

> " (a) extraction plants, ceramic plants, foundries, incinerators, and propellant plants which process beryllium ore, beryllium, beryllium oxide, beryllium alloys, or beryllium-containing waste, [and] (b) machine shops which process beryllium, beryllium oxide, or any alloy when such alloy contains more than 5 percent beryllium by weight."

Air emissions sources regulated by Subpart C must emit no more than 10 grams of beryllium over a 24 hour period, or demonstrate that the ambient concentration of beryllium in the vicinity of the source is less than 0.01 ug/m3/30 day. Section 61.32(c) states that "The burning of beryllium and/or beryllium-containing waste, except propellants, is prohibited except in incinerators, emissions from which must comply with the standard." There is no de minimis process rate included in Subpart C below which incinerators or other sources or beryllium emissions are exempt from the emission and ambient air quality standards.

The owner/operator of the proposed incinerator must certify that no beryllium-containing wastes from sources included in Sections 61.30(a) and 61.30(b) will be accepted by the facility, or demonstrate that beryllium emissions or ambient concentrations will not exceed the standards. Compliance with the standards may be demonstrated either by stack sampling or ambient air quality monitoring, using the procedures referenced in Sections 61.33 and 61.34 of Subpart C.

Although not regulated under Subpart C of NESHAP, FFP-LP will control beryllium emissions from the incinerator stack to less than the NESHAP emission limit of 10 grams per day. Beryllium emissions from the FFP-LP incinerator will be determined during the trial burn and during the annual performance test. The trial burn will be performed at the maximum beryllium feed rate at which the facility is proposed to be permitted. Beryllium emissions at the maximum beryllium feed rate will be less than 10 grams per day. The feed rate of beryllium to the incinerator will be verified during incinerator operation through waste sampling and analysis procedures and written documentation as described in the Waste Characterization and Waste Analysis Plan (Section C of the Part B Permit Application).

FFP-LP will analyze the concentration of beryllium in the incinerator stack emissions during the trial burn to evaluate the risk to the maximum exposed individual (MEI) due to beryllium emissions. This evaluation will be performed to verify that the emissions of metals will not result in exceedances of ambient levels that pose unacceptable health risks as per the Tier III approach specified in the EPA Draft Guidance on Metals and Hydrogen Chloride Controls for Hazardous Waste Incinerators, March 1989. Procedures for determining beryllium emissions from the incinerator are discussed in the trial burn plan in Appendix D-6 of Section D of this submission. Further details on the Tier III approach and the results of risk evaluation of metal emissions based on dispersion analysis are presented in Section 8.0 of this section.

L.4.5.2 Mercury

NESHAP regulations for mercury are contained in 40 CFR 61 Subpart E (Sections 61.50 et. seq.). According to Section 61.50(a), the provisions of Subpart E are applicable to sources that incinerate or dry wastewater treatment system sludge. Sludge is defined in Section 61.51(l) to include sludge produced by a treatment system that processes municipal or industrial waste waters.

Under Subpart E, air emissions from sludge incineration plants must not exceed 3,200 grams of mercury over a 24 hour period. There is no de minimis process rate included in Subpart E below which sludge incinerators or dryers are exempt from the emission standard. Compliance with the standard may be demonstrated either by stack sampling or sludge sampling, using the procedures referenced in Sections 61.53(d) and 61.54(a) of Subpart E.

7lbs/D, 0.3lbs/hr

Sludge incinerators for which mercury emissions exceed 1600 grams per 24 hour period, as demonstrated either by stack sampling or sludge sampling, are required under Section 61.55(a) to monitor mercury emissions annually, using the procedures referenced in that section.

Although not regulated under Subpart E of NESHAP, FFP-LP will control mercury emissions from the incinerator stack to less than the NESHAP limit of 3200 grams per day. Mercury emissions from the FFP-LP incinerator will be determined during the trial burn and during the annual performance test. The trial burn tests will be performed at the maximum mercury feed rate for which the facility is proposed to be permitted. Mercury emissions at the maximum mercury feed rate will be less than 3200 grams per day. The feed rate of mercury to the incinerator will be verified during incinerator operation through waste sampling and analysis procedures and written documentation as described in the Waste Characterization and Waste Analysis Plan (Section C of the Part B Permit Application).

Mercury emissions from the incinerator stack will be determined during the trial burn, in accordance the Draft Guidance on Metals and Hydrogen Chloride Controls for Hazardous Waste Incinerators, March, 1989. Procedures used in determining emissions of mercury from the incinerator are discussed in the Trial Burn Plan in Appendix D-6 of Section D of the Application.

L.4.5.3 Benzene

NESHAP regulations for equipment leaks (fugitive emission sources) of benzene are contained in 40 CFR Subpart J (Sections 61.110 et. seq.). Sources regulated under Subpart J are required to comply with 40 CFR 61 Subpart V (Sections 61.240 et. seq.) National Emission Standard for Equipment Leaks (Fugitive Emission Sources). According to Sections 61.110(a) and 61.240(a), Subpart J and Subpart V are applicable to the following sources that are intended to operate in benzene service:

> "... pumps, compressors, pressure relief devices, sampling connection systems, open ended valves or lines, valves, flanges or other connectors, product accumulator vessels, and control devices or systems required by this subpart."

Under Section 61.110(a)(2) of Subpart J, equipment that is located at a facility "designed to produce or use less than 1,000 megagrams [1,000 metric tons or 1,102.3 tons] of benzene per year" is exempt from the requirements of Subpart J and Subpart V.

Section 61.111 of Subpart J defines "in benzene service" to mean that "a piece of equipment either contains or contacts a fluid (liquid or gas) that is at least 10 percent benzene by weight." According to Section 61.245(d) of Subpart V, each piece of equipment within a process unit that can conceivably contain equipment in benzene service is presumed to be in benzene service unless the owner or operator demonstrates that the benzene content of the process fluid can reasonably be expected never to exceed 10 percent by weight. This may be demonstrated by testing the process fluid or by engineering judgement.

Equipment determined to be in benzene service is subject to design standards, and/or monitoring, inspection, maintenance, and recordkeeping requirements. Standards for pumps, compressors, pressure relief devices, open-ended lines, valves, flanges and connectors, accumulator vessels, and closed vent systems and control devices are contained in Sections 61.242 through 61.244 of Subpart V. Equipment in vacuum service is exempt from these requirements.

FFP-LP intends to accept wastes containing concentrations of benzene of 10% or greater at the proposed facility. In order to do so, FFP-LP will comply with all NESHAP regulations for benzene. All equipment determined to be in benzene service will meet NESHAP design standards and will be monitored, inspected and maintained in accordance with the regulations. Records covering the monitoring, inspection and maintenance of equipment determined to be in benzene service will be kept at the plant and be available for inspection by

US E.P.A., FDER, and county and local officials. Details of the inspection plan are described in Section F of the application.

L.4.6 Florida Emission Limiting and Performance Standards

Particulate Emissions

Visible emissions and emissions of particulate matter from hazardous waste incinerators in Florida are limited under Part VI of the Florida Air Pollution Rules, Emission Limiting and Performance Standards (F.A.C. 17-2.600 et. seq.).

The Florida Air Pollution Rules define an "incinerator" to be "a combustion apparatus designed for the ignition and burning of solid, semi-solid, liquid, or gaseous combustible wastes", covering both municipal solid waste and hazardous waste units. F.A.C. 17-2.600(1) contains the following emission standards applicable to incinerators:

- New incinerators with a charging rate of 50 or more tons per day of waste are limited to a particulate emission rate of 0.08 gr/dry scf corrected to 50 percent excess air;
- New incinerators charging less than 50 tons per day of waste must operate at less than 5 percent opacity, except that 20 percent opacity is allowed for 3 minutes in each hour.
- Operation of incinerators that produces "objectionable odors" is prohibited by the regulations.

The proposed incinerator will charge more than 50 tons of waste per day. Particulate emissions from the incinerator will be controlled by a high-efficiency spray dryer absorber/fabric filter air pollution control system, in accordance with both the Florida Air Pollution Regulations and RCRA regulations. Details of the air pollution control system are provided in

Section D of the application and in Section 5.0 of this section. The air pollution control system is designed to meet particulate emissions standards under both the Florida Air Pollution Regulations and RCRA regulations. Particulate emissions from the incinerator will be determined during the required trial burn, as discussed in Appendix D-6 of Section D of the application, and the incinerator will be operated in accordance with regulatory requirements.

The rotary kiln ~~incinerator~~ and secondary combustion chamber operate at high temperatures and are designed to destroy organic compounds at greater than 99.99 percent efficiency. The high efficiency of the incinerator ~~and secondary combustion chamber~~ will prevent objectionable odors and visible emissions from the incinerator stack, and the incinerator will be operated in accordance with regulatory requirements.

Volatile Organic Compounds

F.A.C. 17-2.620(1) (Part VI, General Pollutant Emission Limiting Standards) requires installation of control systems for emissions of volatile organic compounds. The section states that:

> "No person shall store, pump, handle, process, load, unload, or use in any process or installation volatile organic compounds or organic solvents without applying known or existing vapor emission control devices or systems deemed necessary and ordered by the Department"

No supporting information on specific control requirements is contained in F.A.C. 17-2.620. The term "known and existing" is subject to some degree of interpretation, but is considered to mean "available". FFP-LP has proposed a comprehensive system for control and minimization of fugitive emissions of volatile organic compounds, including design and operating standards and air pollution control equipment that will meet or exceed Florida regulatory requirements for control of VOC emissions. Emission control systems and procedures for control and minimization of fugitive emissions required under this regulation are discussed in Section 5.2 of this section.

L.4.7 Florida Air Permitting Requirements

Permit requirements for air emissions sources located in Florida are contained in F.A.C. Chapters 17-2 and 17-4. F.A.C. 17-2.210 states that "any source which emits or can reasonably be expected to emit any air pollutant shall obtain an appropriate permit prior to beginning construction, modification, or continued or initial operation..." Under F.A.C. 17-2.210(2), Air Operation Permits, the permit application must:

- Specify the manner, nature, volume, and frequency of the emission permitted, and the applicable emission limiting standard or performance standard, if any...; and,
- Require proper operation and maintenance of pollution control equipment.

F.A.C. 17-4.050 outlines procedures for obtaining permits. Anyone applying for a permit must use the prescribed forms and submit all required information. These documents must be filed in quadruplicate and be certified by a professional engineer registered in the state of Florida. There is a processing fee schedule associated with submitting a permit.

F.A.C. 17-4.210 (Florida Rules on Permits, Construction Permit), requires the following information to be included in a Construction Permit Application:

- An engineering report covering plant description and operations, types and quantities of all waste material generated, proposed waste control facilities, the treatment objectives and design criteria on which the control facilities are based, and other information deemed relevant;

- The design efficiencies of the proposed waste treatment facilities and the qualities and types of pollutants in the treated effluent or emissions; and,
- Owners written guarantee to meet the design criteria as accepted by the Department [the State] and the rules and regulations of the Department as to the quantities and types of materials to be discharged from the plant.

The checklist included in Section 1.0 of this section indicates the location within this submission of each of the above-referenced item required by the Florida Rules on Permits. Required forms and certification statements filed in quadruplicate are included in the Appendices. The required fee of $31,000 pursuant to the fee schedule is included in a separate submission to the Department. The breakdown of the fee is as follows:

- Hazardous Waste Incinerator Construction Permit = $5,000
- Hazardous Waste Treatment Facility Construction Permit = $5,000
- Hazardous Waste Facility Operating Permit = $2,000
- Air Permit Application (Construction Permit) for 5 Sources with >100 tons/year potential emissions = $12,500
- Air Permit Application (Construction Permit) for 13 Sources with <50 tons/year potential emissions = $6,500

L.5.0 AIR POLLUTANT EMISSIONS

Criteria and hazardous air pollutants will be emitted from the proposed hazardous waste incinerator, inorganic waste treatment system, waste and reagent storage and handling units, and ancillary equipment, both from point (stack) and non-point (fugitive) sources. The incinerator stack will be the predominant source of both criteria and hazardous air pollutants; much smaller quantities of air pollutants will be emitted from the inorganic waste treatment system stack, waste and reagent storage and handling units, ancillary equipment, and fugitive emissions sources. This section summarizes both regulated and unregulated stack emissions from the incinerator, inorganic waste treatment system caustic scrubber, carbon adsorption and carbon adsorber/chiller systems, waste and reagent storage and handling unit fabric filters, and other air emissions point sources. The characteristics of the air pollution control systems for these stack emissions sources are summarized in this section, and discussed in detail in Section D of the Application.

Fugitive emissions from waste and reagent storage and handling equipment associated with the proposed hazardous waste incinerator and inorganic waste treatment system have been estimated for the purposes of this application. The estimated emission rates, and the description of the sources, of the fugitive emissions of volatile organic and particulate material are presented in this section.

L.5.1 Incinerator Stack Emissions

L.5.1.1 Criteria Pollutant Emissions

The proposed incinerator, as an organic waste combustion process, will emit criteria pollutants, including inhalable particulate (PM-10), sulfur dioxide (SO_2), sulfuric acid mist (SO_4), carbon monoxide (CO), nitrogen oxides (NO_2), and total hydrocarbons (VOCs). The incinerator will also process wastes containing chlorine, fluorine, and metals, and therefore will emit hydrogen chloride (HCl), hydrogen fluoride (HF), vinyl chloride, lead (Pb), mercury (Hg), beryllium (Be) and other metals. Filtrate from the inorganic waste treatment system will be used as makeup water in the spray dryer absorber. This may result in some emissions of reduced sulfur compounds (H_2S), ammonia (NH_3), cyanide (HCN), phosphorus (P_2O_5), and phenol. Tables L-5-1 and Table L-5-2 present a summary of the maximum estimated hourly and annual emissions of the pollutants listed in FAC Table 500-2 and acid gases. The design basis for each pollutant emission calculation is included in the tables. Emissions of particulate matter, metals, and acid gases will be controlled by a spray dryer absorber and fabric filter, as discussed in Section D of the Application.

Emissions of criteria pollutants and acid gases are based on incinerator and air pollution control system design information, the characteristics of wastes expected to be accepted at FFP-LP, and the maximum concentration of specific organic and inorganic constituents in the inorganic waste treatment system filtrate. The design basis for calculations of maximum emissions is further discussed in Section 5.1.3 of this Section. Emission calculations for FAC Table 500-2 pollutants are shown in Appendix L-20. Calculations of the contribution of the inorganic filtrate feed to the SDA to the total emissions are shown in Appendix L-21.

TABLE L-5-1

MAXIMUM EMISSION ESTIMATES OF TABLE 500-2 POLLUTANTS FROM PROPOSED FFP-LP INCINERATOR STACK[1]

POLLUTANT		BASIS FOR ESTIMATE OF EMISSION RATE	CONTROLLED EMISSIONS	
			lb/hr	tons/yr
TABLE 500-2 POLLUTANTS				
Sulfur dioxide	(SO_2)	452 lb/hr loading to SDA	45.23	190.00
Nitrogen oxides	(NO_2)	max. 200 ppm dry volume	41.63	174.85
Carbon monoxide	(CO)	max. 100 ppm dry volume	12.56	52.75
Organic compounds	(VOC)	minimum 99.99% DRE	1.66	6.97
Particulate	(PM-10)	max. 0.02 gr/dscf PM-10 corrected to 7% oxygen	2.93	12.31
Reduced sulfur	(as H_2S)	filtrate feed to SDA	0.0125	0.053
Sulfuric acid mist	(as SO_4)	5% total SO_2 emissions	2.26	9.50
Total fluorides	(as HF)	max. 110 lb/hr F feed	1.16	4.86
Vinyl chloride		avg. 1.0% in waste feed	0.0166	0.0695
Lead	(Pb)	avg. 0.473% of waste feed	0.903	3.79
Mercury	(Hg)	avg. 0.031% of waste feed	0.294	1.23
Asbestos		no asbestos waste accepted	NOT DETECTABLE	
Beryllium	(Be)	avg. 0.0010% of waste feed	0.00091	0.0038

10g/D

---

[1] Emission calculations are based on a ~~total~~ average incinerator waste feed rate of ~~16,550 lb/hr~~ 40,000 TPY, a total filtrate feed rate of 25,000 ~~liters~~ lbs/hr, and an exhaust gas rate of 68,555 acfm at 365°F (27,682 dscfm or 43,875 scfm at 68°F). The incinerator will operate for a maximum of 8,400 hours per year.

TABLE L-5-2

MAXIMUM EMISSION RATES OF ACID GASES AND OTHER POLLUTANTS FROM PROPOSED FFP-LP INCINERATOR[2]

POLLUTANT	BASIS FOR ESTIMATE OF EMISSION RATE	CONTROLLED EMISSIONS	
		lb/hr	tons/yr
Ammonia	filtrate feed to SDA	0.0076	0.0319
Cyanide	filtrate feed to SDA	0.00013	0.00055
Hydrogen chloride (HCl)	1,202 waste lb/hr HCl feed	12.0	50.4
Phenol	filtrate feed to SDA	0.025	0.105
Phosphorous (as P_2O_5)	filtrate feed to SDA	0.0057	0.0239

---

[2] Emission calculations are based on a ~~total~~ average incinerator waste feed rate of ~~16,550 lb/hr~~ 40,000 TPY, a total filtrate feed rate of 25,000 ~~liters~~ lbs/hr, and an exhaust gas rate of 68,555 acfm at 365°F (27,682 dscfm or 43,875 scfm at 68°F). The incinerator will operate for a maximum of 8,400 hours per year.

L.5.1.2 Incinerator Metals Emissions

The proposed incinerator will process metal-containing wastes, including wastes containing beryllium and mercury, and therefore will emit particulate metals. Table L-5-3 is a summary of the maximum estimated annual and hourly emissions of mercury, beryllium, and other metals from the incinerator stack. Table L-5-4 provides the corresponding metals feed rates at the control efficiencies assumed in designing trial burn test conditions. Emission rates of arsenic (As), cadmium (Cd), chromium (Cr), lead (Pb), antimony (Sb), barium (Ba), beryllium (Be), silver (Ag), and thallium (Tl), and mercury (Hg) were estimated based on incinerator design information and characteristics of wastes expected to be received at FFP-LP. Wherever the design standards exceeded regulatory limits, the regulatory limits were used. The metals feed rates and emission rates were checked using emissions and waste characterization data available in the literature other similar commercial incineration systems. The basis for estimating these emissions is further discussed in Sections 5.1.3 and 5.1.4 of this section. Metal emissions calculations are summarized in Appendices L-22 and L-23 and in Attachment D-6-4 of the Trial Burn Plan. Literature data used in support of the emissions calculations are included in Appendix L-24.

L.5.1.3 Design Basis for Calculation of Emissions from the FFP-LP Incinerator

Maximum emissions from the FFP-LP incinerator are, in general, based on operating experience gained over 15 years with the Kommunekemi facility in Denmark, the largest commercial hazardous waste treatment facility in the world. While some emissions data are available for existing units in the U.S., ~~however,~~ existing incinerators are not considered representative of the proposed FFP-LP facility for several reasons. For example, air emissions from most existing

TABLE L-5-3

MAXIMUM EMISSION RATES OF METALS FROM THE PROPOSED INCINERATOR STACK[3]

CONSTITUENT		DESIGN COMPOSITION FOR ESTIMATE OF EMISSION RATE	CONTROLLED (lb/hr)	EMISSIONS (tons/yr)
Arsenic	(As)	0.048% of avg. annual waste feed	0.094	0.394
Beryllium	(Be)	0.0010% of avg. annual waste feed	0.00091	0.0038
Cadmium	(Cd)	0.087% of avg. annual waste feed	0.166	0.696
Chromium	(Cr)	0.052% of avg. annual waste feed	0.050	0.209
Antimony	(Sb)	1.311% of avg. annual waste feed	2.498	10.5
Barium	(Ba)	0.524% of avg. annual waste feed	0.500	2.10
Lead	(Pb)	0.473% of avg. annual waste feed	0.903	3.79
Mercury	(Hg)	0.031% of avg. annual waste feed	0.292	1.23
Silver	(Ag)	0.522% of avg. annual waste feed	0.497	2.09
Thallium	(Tl)	0.435% of avg. annual waste feed	0.828	3.48

---

[3] Emission calculations are based on a ~~total~~ average incinerator waste feed rate of ~~16,550 lb/hr~~ 40,000 TPY, a total filtrate feed rate of 25,000 ~~liters~~ lbs/hr, and an exhaust gas rate of 68,555 acfm at 365°F (27,682 dscfm or 43,875 scfm at 68°F). The incinerator will operate for a maximum of 8,400 hours per year.

TABLE L-5-4

MAXIMUM METALS FEED RATES AND METALS EMISSION RATES CORRESPONDING TO DESIGN FEED COMPOSITION AND MAXIMUM WASTE FEED RATE FOR PROPOSED FFP-LP INCINERATOR

CONSTITUENT	FFP-LP DESIGN COMPOSITION	CONTROL EFFICIENCY[6]	FEED RATE[4] (lb/hr)	EMISSION RATE[5] (lb/hr)
ARSENIC	0.048%	98%	4.59	0.0938
BERYLLIUM	0.0010%	99%	0.0905	0.000091
CADMIUM	0.087%	98%	8.29	0.166
CHROMIUM	0.052%	99%	4.96	0.0497
ANTIMONY	1.311%	98%	125.0	2.50
BARIUM	0.524%	99%	49.876	0.499
LEAD	0.473%	98%	45.0	0.903
MERCURY	0.031%	90%	2.92	0.292
SILVER	0.522%	99%	49.7	0.497
THALLIUM	0.435%	98%	41.4	0.829

---

[4] Maximum feed rates are calculated based on the average ~~maximum~~ waste feed rate to the incinerator of 40,000 TPY ~~16,550 lb/hr~~. Metals feed rates in this Table include only metals included in the waste feeds to the incinerator. Additional metals will be fed directly to the spray dryer absorber (SDA) with the filtrate from the inorganic waste treatment system. Limitations on metals feeds to the SDA are further discussed in the Trial Burn Plan in Appendix D-6 of Section 6.

[5] Maximum emission rates are based on an assumed air pollution control system efficiency of 99 percent for barium, beryllium, chromium, and silver, 90 percent for mercury, and ~~95~~ 98 percent for other listed metals. Maximum emission rates are calculated from the total metals feeds to the incinerator and SDA.

[6] Control efficiencies for metals have been assumed based on Table II-8 of the Draft Guidance on Metals and Hydrogen Chloride Controls from Hazardous Waste Incinerators, March, 1989, according to the Tier III metals calculation methodology. It is expected that the actual metals removal efficiencies of the incinerator, spray dryer absorber and fabric filter will be higher than those assumed in designing trial burn test conditions. ~~Test conditions for tentative additional trial burn tests at higher assumed metals removal efficiencies and corresponding higher metals feed rates are outlined in the Trial Burn Plan.~~

hazardous waste incinerators are controlled by wet scrubbers, while emissions from the FFP-LP incinerator will be controlled by a spray dryer absorber and fabric filter. The SDA/FF control system is generally more efficient in controlling emissions of particulate material, metals, and acid gases than are wet scrubbers, as illustrated in Table III-8 of the Draft Guidance on Metal and Hydrogen Chloride Controls for Hazardous Waste Incinerators, March 1989. Further, existing incinerators for which operating data have been reported in the literature have not been required to meet the proposed emission standards for metals, and some also do not meet particulate emissions standards for hazardous waste incinerators. Emissions of metals and hydrogen chloride have therefore been calculated based on incinerator design information and the characteristics of wastes expected to be burned in the incinerator, using the control efficiencies contained in Table III-8 of the EPA Guidance Document. The maximum content of chlorine and certain metals in wastes expected to be received at FFP-LP is greater than that which would be allowed based on Tier III limits. Wastes containing chlorine and metals will therefore be blended such that proposed feed rate and emission limits will not be exceeded.

Metals emission calculations are summarized in Appendix L-22 ~~and L-23~~. The calculated emissions of hydrogen chloride and metals will be verified during the trial burn. Trial burn conditions are discussed in Appendix D-6 of Section D. The trial burn test conditions are designed to determine the emissions of metals and hydrogen chloride at the maximum feed rates of metals and chlorine to the incinerator system, including the kiln, SCC, and SDA. Actual permit conditions will be based on the results of the trial burn tests. The concentration of chlorine and metals in the blended wastes will be measured prior to incineration, or calculated from analysis of individual waste streams prior to blending. Emissions will be calculated by mass balance based on the control efficiencies measured during the trial burn.

Emissions of SO_2 and HF from hazardous waste incinerators are dependent on the composition of fuel and waste fired in the incinerator, and emissions of CO and NO_x are dependent on the design of the burners and nozzles and combustion conditions in the kiln and SCC. Tests of existing incinerators with different waste feeds and combustion systems will not be representative of the FFP-LP design. Also, the FFP-LP incinerator will be required to control combustion conditions to limit CO emissions to less than 100 ppm. Existing incinerators for which data are reported in the literature have not been subjected to these requirements. Maximum emissions of SO_2, HF, CO, and NO_x are therefore based on the expected waste and fuel characteristics and design of the incinerator combustion systems. Emissions of CO will be verified by a continuous monitoring system, and emissions of SO_2 and HF will be verified by analysis of the wastes and fuels burned in the incinerator and mass balance calculations. Total hydrocarbon emissions will also be continuously monitored.

Literature sources of waste characterization data and emissions data for hazardous waste incinerators were used to support the incinerator design information, and have been included in Appendix L-24 of this section for reference. These data were used to support the incinerator and air pollution control system design calculations, however, the data were not used directly to calculate emissions from the FFP-LP incinerator.

L.5.1.4 Basis for Estimation of Metals Emissions from the Incinerator Stack

Calculations of the actual maximum metals emissions from the incinerator are based on incinerator design limitations, waste characterization data, and regulatory requirements. Waste characterization data and design specifications provided by the incinerator design firm and waste characterization data taken from the literature indicate that the maximum concentrations of carcinogenic metals in wastes likely to be received at the facility would be too high to allow incineration of the unblended wastes. That is, emissions from incineration of the unblended metals wastes would exceed allowable air quality limits calculated using the Tier III methodology, assuming the incinerator were operated at the maximum 8,400 hours per year. For example, annual emissions of lead would likely exceed PSD de minimis limit of 5 tons per year if the unblended lead wastes were incinerated for the maximum 8,400 hours per year. Metal-containing wastes received by FFP-LP will therefore be blended to control metal concentrations, and waste types will be fed to the incinerator at set rates, as required such that regulatory requirements will not be exceeded.

Calculations of allowable metal feed rates and actual maximum metals feed rates to the incinerator system are included in Appendix L-22 ~~and L-23~~ and in the Trial Burn Plan. Trial burn tests two ~~and three~~ will demonstrate that maximum emissions of toxic metals from the incinerator stack will not exceed the calculated allowable limits.

The calculation of maximum metals emissions from the incinerator is based on the total maximum feed rate of each metal to the incinerator. The removal efficiency of the spray dry adsorber and fabric filter are assumed to be 99 percent for barium, beryllium, chromium, and silver, 90 percent for mercury, and 98 percent for other listed metals. The removal of metals with the incinerator ash has been assumed to be negligible. It is expected that the actual metals removal efficiencies of the incinerator system will be greater than those assumed in the Draft Guidance Document, and that removal of metals in the incinerator ash will be significant for certain metals.

L.5.2 Inorganic Waste Treatment System Stack Emissions

The inorganic waste treatment system will process wastes containing cyanide compounds, chlorine, fluorine, and nitrogen, and will therefore emit hydrogen cyanide (HCN), hydrogen fluoride (HF), hydrogen chloride (HCl), and nitrogen oxides (NO_2). Table L-5-5 summarizes the maximum estimated annual and hourly emissions of FAC Table 500-2 pollutants, hydrogen chloride, and hydrogen cyanide from the inorganic waste treatment system stack. Emissions of acid gases and particulates will be controlled by a caustic wet scrubber. Emissions of FAC Table 500-2 pollutants other than HCN, HF, HCl, and NO_2 will not be detectable in the scrubber exhaust gas. Emission rates of these pollutants from the inorganic waste treatment system stack are based on the waste treatment system and air pollution control system design characteristics. The inorganic waste treatment system will not generate detectable amounts of hydrogen sulfide (H_2S) or result in objectionable odors in off-site locations. Treatment activities having the possibility of generating such objectionable odors will not be conducted at FFP-LP.

The inorganic waste treatment system caustic scrubber is designed to control emissions from the inorganic waste treatment system during routine operations and also during upset conditions. Maximum emission rates of pollutants from the inorganic waste treatment system caustic scrubber are presented in Table L-5-6. These maximum emission rates represent the emissions expected to occur during treatment reactor upset conditions, and do not represent the emissions expected to occur during routine system operations.

TABLE L-5-5

MAXIMUM CONTROLLED AND UNCONTROLLED EMISSIONS DURING ROUTINE OPERATION OF THE INORGANIC WASTE TREATMENT SYSTEM

POLLUTANT		UNCONTROLLED EMISSIONS lb/hr	UNCONTROLLED EMISSIONS tons/yr	CONTROLLED EMISSIONS lb/hr	CONTROLLED EMISSIONS tons/yr
TABLE 500-2 POLLUTANTS					
SULFUR DIOXIDE	(SO_2)	NOT DETECTABLE		NOT DETECTABLE	
NITROGEN OXIDES	(NO_2)	0.428	1.8	0.0428	0.18
CARBON MONOXIDE	(CO)	NOT DETECTABLE		NOT DETECTABLE	
ORGANIC COMPOUNDS	(VOC)	0.1	0.42	0.1	0.42
PARTICULATE	(PM-10)	NOT DETECTABLE		NOT DETECTABLE	
REDUCED SULFUR	(as H_2S)	NOT DETECTABLE		NOT DETECTABLE	
SULFURIC ACID MIST	(as SO_4)	NOT DETECTABLE		NOT DETECTABLE	
TOTAL FLUORIDES	(as HF)	0.074	0.31	0.00074	0.0031
VINYL CHLORIDE		NOT DETECTABLE		NOT DETECTABLE	
LEAD	(Pb)	NOT DETECTABLE		NOT DETECTABLE	
MERCURY	(Hg)	NOT DETECTABLE		NOT DETECTABLE	
ASBESTOS		NOT DETECTABLE		NOT DETECTABLE	
BERYLLIUM	(Be)	NOT DETECTABLE		NOT DETECTABLE	
OTHER POLLUTANTS					
HYDROGEN CYANIDE	(HCN)	0.13	0.54	0.0013	0.0054
HYDROGEN CHLORIDE	(HCl)	0.17	0.714	0.0017	0.00714

TABLE L-5-6

MAXIMUM CONTROLLED AND UNCONTROLLED EMISSIONS DURING INORGANIC WASTE TREATMENT SYSTEM UPSET CONDITIONS[7]

POLLUTANT		UNCONTROLLED EMISSIONS lb/hr	CONTROLLED EMISSIONS lb/hr
TABLE 500-2 POLLUTANTS			
SULFUR DIOXIDE	(SO_2)	NOT DETECTABLE	NOT DETECTABLE
NITROGEN OXIDES	(NO_2)	109	10.9
CARBON MONOXIDE	(CO)	NOT DETECTABLE	NOT DETECTABLE
ORGANIC COMPOUNDS	(VOC)[8]	0.1	0.1
PARTICULATE	(PM-10)	NOT DETECTABLE	NOT DETECTABLE
REDUCED SULFUR	(as H_2S)	NOT DETECTABLE	NOT DETECTABLE
SULFURIC ACID MIST	(as SO_4)	NOT DETECTABLE	NOT DETECTABLE
TOTAL FLUORIDES	(as HF)	9.5	0.095
VINYL CHLORIDE		NOT DETECTABLE	NOT DETECTABLE
LEAD	(Pb)	NOT DETECTABLE	NOT DETECTABLE
MERCURY	(Hg)	NOT DETECTABLE	NOT DETECTABLE
ASBESTOS		NOT DETECTABLE	NOT DETECTABLE
BERYLLIUM	(Be)	NOT DETECTABLE	NOT DETECTABLE
OTHER POLLUTANTS			
HYDROGEN CYANIDE	(HCN)	25.7	0.257
HYDROGEN CHLORIDE	(HCl)	207.7	2.077

---

[7] Emissions resulting from inorganic waste treatment system upset conditions are not calculated in tons per year, as upset conditions are expected to occur less than once per year.

[8] Fugitive volatile organic compound emissions are not affected by upset conditions.

The inorganic waste treatment system caustic scrubber is designed to handle the maximum emission rates that may occur during worst-case upset conditions, however, such upset conditions are not expected to occur at all. The maximum durations of upset events are summarized in Section D.8 of the Application, and are in all cases 30 minutes or less in duration. These are estimated based on the time required for the chemical reactions occurring during upset conditions to reach completion. Procedures to prevent upset conditions are also presented in Section D of the Application. The maximum hourly emissions during upset conditions have not been used in calculating annual emissions in tons per year, as such upset events are expected to occur less than once per year.

L.5.3 Organic Liquid Storage and Handling Area Emissions

Florida regulation FAC 17-2.620(1)(a) requires that organic liquid storage and handling systems located in Florida be equipped with "known and existing vapor emission control devices or systems deemed necessary and ordered by the Department". In compliance with this regulation, FFP-LP has included the following design specifications in designing the organic liquid storage and handling system:

> Organic vapor emissions from organic liquid storage tanks, including working losses from truck and rail car unloading operations, at FFP-LP are vented to the incinerator at all times when the incinerator is operating. The incinerator secondary combustion chamber operates at a minimum temperature of 1,800 degrees F at a minimum gas residence time of 2 seconds (2.5 seconds at a combustion gas flowrate of 71,000 acfm as demonstrated in Trial Burn Test #3). The minimum destruction and removal efficiency for organic compounds at these conditions is 99.99 percent. The incinerator is expected to operate for 8,400 hours per year.
>
> Organic vapor emissions from organic liquid storage tanks at FFP-LP are vented to a two-stage chiller and two parallel carbon adsorption systems with a minimum removal efficiency of 95 percent at all times when the incinerator is not operating.

Organic vapor emissions (breathing losses) from trucks containing organic liquids unloading at FFP-LP are vented to two parallel carbon adsorption systems with a minimum removal efficiency of 95 percent at all times.

Organic vapor emissions (breathing losses) from rail cars containing organic liquids unloading at FFP-LP are vented to two parallel carbon adsorption systems with a minimum removal efficiency of 95 percent at all times.

Tables L-5-7 and L-5-8 are summaries of the maximum estimated ~~emissions~~ annual and hourly emissions of volatile organic compounds from unloading tank trucks and railroad cars, and the organic liquids storage tanks, expressed as ~~acetone and~~ methylene chloride. Tables L-5-9 and L-5-10 summarize the fugitive emissions from truck and rail car breathing losses. The carbon adsorber/chiller system and carbon adsorption system are further discussed in Section D of the Application. Emission calculations are included in Appendices L-3, L-4, and L-5, the air permit applications for these sources.

TABLE L-5-7

SUMMARY OF VOLATILE ORGANIC COMPOUND EMISSIONS FROM TANK TRUCKS AND RAILCARS[9]

POLLUTANT	UNCONTROLLED EMISSIONS		CONTROLLED EMISSIONS	
	(lb/hr)[10]	(tons/yr)	(lbs/hr)[11]	(tons/yr)
~~Acetone~~	~~103~~	~~10,101~~	~~0.011~~	~~0.0473~~
Methylene chloride	613.8	31.68	0.0691	0.319

---

[9] Methylene chloride has been selected to represent the volatile organic compounds that could potentially be emitted from the tank truck and rail car unloading operations, emissions due to breathing and working losses from storage tanks, tank trucks, and rail cars based on its volatility. Details pertaining to the estimation of these emission rates are presented in Appendix L-5, the air permit application for the organic liquid storage tanks.

[10] The uncontrolled emission rate represents the combined emission rate as a result of unloading two tank trucks and one railroad tank car simultaneously.

[11] The controlled emission rate is estimated based on the use of both the hazardous waste incinerator and the carbon adsorber/chiller system for controlling the emissions from the unloading operations. This emission rate is averaged over 8,760 hours.

TABLE L-5-8

SUMMARY OF VOLATILE ORGANIC COMPOUND EMISSIONS FROM ORGANIC LIQUID STORAGE TANKS

POLLUTANT	UNCONTROLLED EMISSIONS		CONTROLLED EMISSIONS	
	(lb/hr)[12]	(tons/yr)	(lbs/hr)[13]	(tons/yr)
~~Acetone~~	~~286.73~~	~~6.108~~	~~0.0135~~	~~0.0568~~
Methylene chloride	613.8	40.341	0.0918	0.40228

0.092 x 1920 ÷ 2000 = 0.0883

⇒ 0.088

---

[12] The uncontrolled emission rate represents the combined emission rate as a result of unloading two tank trucks and one railroad tank car simultaneously.

[13] The controlled emission rate is estimated based on the use of both the hazardous waste incinerator and the carbon adsorber/chiller system for controlling the emissions from the unloading operations. This emission rate is averaged over 8,760 hours.

TABLE L-5-9

SUMMARY OF VOLATILE ORGANIC COMPOUND EMISSIONS DUE TO BREATHING LOSSES FROM RAILCARS

POLLUTANT	UNCONTROLLED EMISSIONS (lb/hr)[14]	UNCONTROLLED EMISSIONS (tons/yr)	CONTROLLED EMISSIONS (lbs/hr)	CONTROLLED EMISSIONS (tons/yr)[15]
~~Acetone~~	~~0.0033~~	~~0.0078~~	~~0.000165~~	~~0.00039~~
Methylene chloride	0.3923	0.0506	0.01962	0.00253

0.02 x 1920 ÷ 2000 = 0.0192
=> 0.019

---

[14] The uncontrolled emission rate represents the breathing losses from one rail car unloading high-Btu liquids.

[15] The controlled emission rate is estimated based on the use of the carbon adsorption system for controlling the emissions as a result of breathing of rail cars. This emission rate is averaged over the estimated hours of unloading of all rail cars at the proposed FFPI facility.

TABLE L-5-10

SUMMARY OF VOLATILE ORGANIC COMPOUND EMISSIONS DUE TO BREATHING LOSSES FROM TANK TRUCKS

POLLUTANT	UNCONTROLLED EMISSIONS (lb/hr)[16]	(tons/yr)	CONTROLLED EMISSIONS (lbs/hr)	(tons/yr)[17]
~~Acetone~~	~~0.0012~~	~~0.000555~~	~~0.00006~~	~~0.00002775~~
Methylene chloride	0.2534	0.00327	0.01267	0.000164

0.013 x 1920 ÷ 2000 = 0.01248

=> 0.012

---

[16] The uncontrolled emission rate represents the breathing losses from two tank trucks simultaneously unloading high-Btu liquids.

[17] The controlled emission rate is estimated based on the use of the carbon adsorption system for controlling the emissions as a result of breathing of tank trucks. This emission rate is averaged over the estimated hours of unloading of all tank trucks at the proposed FFP-LP facility.

L.5.4 Fugitive Emissions

The proposed facility will emit fugitive emissions of volatile organic compounds and particulates. Fugitive emissions of volatile organics will be emitted from various components of the facility such as valves, flanges, and pumps. Fugitive emissions of particulates may be emitted during solids handling operations involving loading and unloading. Estimates of fugitive emissions of volatile organics and particulates and the basis of determination are presented in the following sections. Appendices L-25 and L-26 present the detailed calculations of the fugitive emission rates.

L.5.4.1 Fugitive Emissions of Volatile Organic Compounds

There are about 45 potential sources of fugitive VOC emissions associated with the waste handling and waste storage systems at the proposed FFP-LP facility as shown in Table L-5-11. Associated with each source are components such as flanges, pumps, and valves which actually emit the fugitive emissions. These components are classified as "leaking", and "non-leaking" based on the concentration of the leaked VOC actually measured around them. If the concentration measured is in excess of 10,000 ppm, the component is classified as a "leaking" component (SOCMI 1986). Conversely, if the concentration is less than 10,000 ppm, the component is classified as "non-leaking". The estimation method used in computing the fugitive emissions of VOCs and the emission rates are presented in the following sections. In addition, estimates of fugitive VOC emissions due to potential spills are also presented. Table L-5-12 presents the average volume of different types of wastes estimated to be handled at the proposed facility annually.

Based on the heating values of the different types of wastes, the incinerator designer has defined "typical" compositions (by weight) of these

TABLE L-5-11

SOURCES CONTRIBUTING TO FUGITIVE EMISSIONS AT THE PROPOSED FFP-LP FACILITY

Description of Fugitive Source	Operating Schedule hours/day	Operating Schedule days/year	
Transfer from tank truck unloading to waste storage header using Pump P-01	8	365	
Transfer from tank truck unloading to waste storage header using Pump P-02	8	365	
Transfer from tank truck unloading/direct burn to kiln/SCC using Pump P-04	0.02	365	73 hrs
Transfer to the pumpable waste storage header using Pump P-06	8	365	
Transfer to fuel oil storage tank using Pump P-05	24	365	
Direct burn recirculation line from kiln/SCC to truck unloading	0.02	365	73
Transfer from sludge pump to the pumpable waste storage header using Pump P-79	8	365	
Transfer to the drummed pumpable waste storage receiver (T-09) using Pump P-07	8	365	
Flow from drummed pumpable waste storage receiver (T-09) to pumpable waste storage feed header	8	365	
Transfer from the liquid waste feed header to receiving/holding tank (T-10)	8	365	
Transfer from the liquid waste feed header to receiving holding tank (T-11)	8	365	
Transfer from the liquid waste feed header to receiving/holding tank (T-12)	8	365	
Transfer from the liquid waste feed header to receiving/holding tank (T-13)	8	365	
Transfer from the liquid waste feed header to receiving/holding tank (T-14)	8	365	

TABLE L-5-11 (Continued)

Description of Fugitive Source	Operating Schedule hours/day	days/year
Transfer from the liquid waste feed header to receiving/holding tank (T-15)	8	365
Transfer from receiving/handling tank (T-10), side or bottom draw, to the emptying header	8	365
Transfer from receiving/handling tank (T-11), side or bottom draw, to the emptying header	8	365
Transfer from receiving/handling tank (T-12), side or bottom draw, to the emptying header	8	365
Transfer from receiving/handling tank (T-13), side or bottom draw, to the emptying header	8	365
Transfer from receiving/handling tank (T-14), side or bottom draw, to the emptying header	8	365
Transfer from receiving/handling tank (T-15), side or bottom draw, to the emptying header	8	365
Transfer to the pumpable waste storage header using one of the Pumps P-09, P-10, or P-11	8	365
Transfer of sludge to the kiln using Pump P-16	12	365
Transfer from the sludge holding tank (T-16) to the emptying header	12	365
Transfer from the waste feed header to the sludge feed tank (T-17)	12	365
Transfer from the waste feed header to the sludge holding tank (T-16)	12	365
Transfer from the sludge feed tank (T-17) to the emptying header	12	365
Transfer from the pumpable waste storage feed header to the Low-Btu liquid feed tank (T-18)	8	365
Transfer from the pumpable waste storage feed header to the High-Btu liquid feed tank (T-19)	8	365

TABLE L-5-11 (Continued)

Description of Fugitive Source	Operating Schedule hours/day	Operating Schedule days/year
Transfer from the pumpable waste storage feed header to the High-Btu liquid feed tank (T-20)	8	365
Transfer from Low-Btu liquid feed tank (T-18) by side draw off to kiln/SCC	24	365
Transfer from Low-Btu liquid feed tank (T-18) by bottom draw off to kiln/SCC	24	365
Transfer from High-Btu liquid feed tanks (T-19 or T-20) by side draw off to kiln/SCC	24	365
Transfer from High-Btu liquid feed tank (T-19) to the emptying headers	24	365
Transfer from High-Btu liquid feed tank (T-20) to the emptying headers	24	365
Recirculation of Low-Btu liquid from kiln to Low-Btu liquid feed tank (T-18)	24	365
Recirculation of High-Btu liquid from kiln to High-Btu liquid feed tank (T-19 or T-20)	24	365
Transfer of fuel oil from fuel oil storage tank to the kiln/SCC	24	365
Transfer of ash quench liquid to filter feed tanks	24	365

wastes. Table L-5-13 describes the nominal worst case volatility compositions assumed only for the purposes of these calculations.

As shown in Table L-5-11, there are 45 potential leak sources which emit fugitive emissions due to the actual leaking of VOCs from the associated components. The components (through which the fugitive emissions are emitted) associated with each leak source may consist of pumps, valves, safety/relief valves, sampling connections, compressors, and flanges. The fugitive emissions are estimated based on the emission factors developed by the Synthetic Organic Chemical Manufacturers Industry (SOCMI 1986). SOCMI has developed conservative emission factors to estimate the fugitive emissions of VOCs in pounds per hour for each of these types of components. There are two separate emission factors for leaking and non-leaking components. In order to carry out the refined analysis of effects associated with fugitive VOC emissions, the most realistic case is considered, i.e. emission factors for "non-leaking" components. This assumption is considered realistic since the proposed FFP-LP facility, as a newly constructed facility, would not be expected to have any "leaking" components at all. Further, as all piping at FFP-LP will be inspected daily, specifically to detect any leaks, no components will be allowed to leak for extended periods. The ~~worst-case~~ total fugitive emissions from all sources are estimated to be 0.757 lbs/hr (3.32 tons/yr). Table L-5-14 presents the emission rates of the fugitive VOCs from all the components at FFP-LP identified to contribute to such emissions.

In addition to the estimates of the fugitive emissions emitted from the various components of the facility, estimates of emissions due to potential spills during material handling were also estimated. An estimated 40,005 tons

TABLE L-5-13

WASTE STREAM CHARACTERISTICS ASSUMED FOR PURPOSES OF FUGITIVE CALCULATIONS

	Components (% by weight)				
Waste Stream	Toluene	Acetone	Methylene Chloride	Water	Ash
Drummed Solids	5	43	0	12	40
Bulk Solids	2	14	0	9	76
Sludges	0	60	15	6	19
Low-Btu Liquids	0	5	8	86	1
High-Btu Liquids	0	37	56	2	5

TABLE L-5-14

SUMMARY OF FUGITIVE VOC EMISSIONS FROM THE PROPOSED FFP-LP FACILITY

SOURCE #	PUMPS	VALVES	SAF/REL VALVES	OPEN-END LINES	SAMPL. CONNXNS	COMP-RESSORS	FLANGES	OTHER	WASTE TYPE	SOURCE DESCRIPTION	AVERAGE USAGE (hr/day)	ANNUAL EMISSION (lb)
1	1	6	0	0	1	0	10	2	H	From pump P-01 tank truck unloading to waste storage header	8	146.29
2	1	12	0	0	1	0	15	0	H	From pump P-02 tank truck unloading to waste storage header	8	214.77
3	1	37	0	0	1	0	39	2	H	From pump P-04 tank truck unloading / direct burn to kiln/SCC	0.02	1.49
4	1	15	0	0	1	0	21	2	H	From Pump P-06 to pumpable waste storage header	8	250.33
5	1	4	0	0	1	0	8	2	F	From pump P-05 to fuel oil storage tank	24	370.02
6	0	7	0	0	0	0	9	2	H	Direct burn recirculation line from Kiln/SCC to truck unloading	0.02	0.24
7	1	8	0	0	1	0	10	0	S	From sludge pump P-79 to pumpable waste storage header	8	168.48
8	1	6	0	0	1	0	11	2	H	From pump P-07 to drummed pumpable waste storage reciever (T-09)	8	146.67
9	1	7	0	0	1	0	12	0	H	From DPWSR (T-09) to pumpable waste storage feed header	8	158.15
10	0	2	0	0	0	0	2	0	H	From liquid waste feed header to receiving/holding tank (T-10)	8	22.95
11	0	2	0	0	0	0	2	0	H	From liquid waste feed header to receiving/holding tank (T-11)	8	22.95
12	0	2	0	0	0	0	2	0	H	From liquid waste feed header to receiving/holding tank (T-12)	8	22.95
13	0	2	0	0	0	0	2	0	H	From liquid waste feed header to receiving/holding tank (T-13)	8	22.95
14	0	2	0	0	0	0	2	0	H	From liquid waste feed header to receiving/holding tank (T-14)	8	22.95
15	0	2	0	0	0	0	2	0	H	From liquid waste feed header to receiving/holding tank (T-15)	8	22.95
16,17	0	3	0	0	1	0	2	0	H	From R/H tank (T-10), side or bottom draw, to emptying header	8	34.05
18,19	0	3	0	0	1	0	2	0	H	From R/H tank (T-11), side or bottom draw, to emptying header	8	34.05
20,21	0	3	0	0	1	0	2	0	H	From R/H tank (T-12), side or bottom draw, to emptying header	8	34.05
22,23	0	3	0	0	1	0	2	0	H	From R/H tank (T-13), side or bottom draw, to emptying header	8	34.05
24,25	0	3	0	0	1	0	2	0	H	From R/H tank (T-14), side or bottom draw, to emptying header	8	34.05
26,27	0	3	0	0	1	0	2	0	H	From R/H tank (T-15), side or bottom draw, to emptying header	8	34.05
28	1	7	0	0	1	0	6	1	H	From pumps P-09, P-10, or P-11 to pumpable waste storage header	8	155.87
29	1	12	0	0	1	0	14	2	S	From pump P-16 to kiln (sludge to kiln)	12	321.58
30	0	3	0	0	1	0	2	0	S	From sludge holding tank (T-16) to emptying header	12	51.07
31	0	2	0	0	0	0	3	0	S	From waste feed header to sludge feed tank (T-17)	12	35.00
32	0	2	0	0	0	0	3	0	S	From waste feed header to sludge holding tank (T-16)	12	35.00
33	0	3	0	0	1	0	2	0	S	From sludga holding feed tank (T-17) to emptying header	12	51.07
34	0	2	0	0	0	0	3	0	L	Pumpable waste storage feed header to Low-BTU liq feed tank (T-18)	8	23.33
35	0	2	0	0	0	0	3	0	H	Pumpable waste storage feed header to Hi-BTU liq feed tank (T-19)	8	23.33
36	0	2	0	0	0	0	3	0	H	Pumpable waste storage feed header to Hi-BTU liq feed tank (T-20)	8	23.33
37	1	26	0	0	1	0	30	4	L	Low-BTU liquid feed tank (T-18) side draw off to kiln/SCC	24	1127.41
38	0	3	0	0	1	0	2	4	L	Low-BTU liq feed tank (T-18) bottom draw off to waste storage EH	24	102.14
39	1	18	0	0	1	0	23	4	H	Hi-BTU liquid feed tank (T-19 or T-20) side draw off to kiln/SCC	24	853.14
40	0	3	0	0	1	0	2	0	H	Hi-BTU liq feed tank (T-19) to waste storage EH	24	102.14
41	0	3	0	0	1	0	2	0	H	Hi-BTU liq feed tank (T-20) to waste storage EH	24	102.14
42	0	4	0	0	0	0	8	0	L	Low-BTU liq recirc. from kiln to Low-BTU liq feed tank (T-18)	24	142.26
43	0	4	0	0	0	0	10	0	H	Hi-BTU liq recirc. from kiln to Hi-BTU liq feed tank (T-19 or T-20	24	144.54
44	1	28	0	0	1	0	36	0	F	From fuel oil storage tank to kiln/SCC	24	1200.82
45	1	3	0	0	1	0	12	0	L	Ash quench liquid to filter feed tanks	24	341.29
TOTALS	14	259	0	0	25	0	323	27				

LEAKS (lb/yr)	6,634
SPILLS (lb/yr)	1,689
TOTAL (lb/yr)	8,323
TOTAL (g/s)	0.1198
TOTAL (tpy)	4.17

NON-LEAKING EMISSION FACTORS (LB/HR): LIGHT LIQUIDS

	PUMPS	VALVES	SAF/REL VALVES	OPEN-END LINES	SAMPL. CONNXNS	COMP-RESSORS	FLANGES	OTHER
LIGHT LIQUIDS	0.026	0.0038	0.098	0.0033	0	0.2	0.00013	0

NON-LEAKING EMISSION FACTORS (LB/HR): HEAVY LIQUIDS

	PUMPS	VALVES	SAF/REL VALVES	OPEN-END LINES	SAMPL. CONNXNS	COMP-RESSORS	FLANGES	OTHER
HEAVY LIQUIDS	0.03	0.00051	0.098	0.0033	0	0.2	0.00013	0

of incinerable wastes will be handled each year at the proposed facility. There is some potential for spills associated with the handling (material unloading) of such a large volume of wastes even with the extensive training, inspection, and contingency plans that will be implemented at FFP-LP. Air contaminant emissions can result due to evaporation of volatile portion of any material spilled. Emission rates of the VOCs from potential spills have been estimated using the method suggested by EPA in the Guidance Document Hazardous Waste Treatment, Storage, and Disposal Facilities (TSDF) - Air Emission Models, December 1987. According to this method, to estimate the potential spillage from tanker trucks, it is assumed that 1 pound of liquid spills for every 100,000 pounds handled. In addition, it is also assumed that 50% of the organic content of the spill is volatilized before cleanup. For containerized waste spillage, the EPA method assumes that 1 pound of material spills due to container rupture or damage for every 10,000 pounds of waste handled. It is also assumed that 50% of the organics volatilize before cleanup.

As indicated earlier, the drummed solids and bulk solids are received in containers. The sludges, low-Btu, and the high-Btu liquids are received via trucks. The fugitive emissions of VOCs resulting from potential spills of these wastes are presented in Table L-5-15. A sample calculation for the case of drummed solids is as follows:

$$\frac{1\text{ lb spilled}}{10{,}000\text{ lbs handled}} \times \frac{8{,}665\text{ tons handled}}{\text{year}} \times \frac{2{,}000\text{ lbs}}{\text{ton}} \times \frac{0.5\text{ lb VOC volatilized}}{1\text{ lb spilled}}$$

= 866.5 lbs VOC emitted per year

TABLE L-5-15

FUGITIVE EMISSIONS OF VOLATILE ORGANIC COMPOUNDS DUE TO POTENTIAL SPILLAGE

Type of Waste	Amount handled (tons/yr)	VOC emitted as fugitive emissions (lb/yr) (tons/yr)
Drummed Solids	8,665	866.5
Bulk Solids	5,661	566.1
Sludges	14,688	146.9
Low-Btu Liquids	7,344	73.4
High-Btu Liquids	3,647	36.5
Total[19]	**40,005**	**1,689.4 (0.845)**

---

[19] Annual fugitive emission rates in tons per year are based on the operating schedules given in Appendix L-25.

L.5.4.2 Fugitive Emissions of Particulate Matter

Table L-5-16 presents all sources of fugitive particulate emissions at the proposed facility. The emission rates of the fugitive particulate matter were estimated using the method given in the EPA Document <u>Compilation of Air Pollutant Emission Factors: AP-42, Fourth Edition, September 1985</u>. The emission rates of fugitive particulates from solids handling operations are estimated as follows:

$$E = k*(0.0018)*\frac{(s/5)*(U/5)*(H/5)}{(M/2)^2 * (Y/6)^{1/3}}$$

where: E = Emission factor (lb/ton of material handled)
k = Particle size multiplier (dimensionless)
  0.36 for PM-10, and 0.73 for TSP for batch operations
  0.37 for PM-10, and 0.77 for TSP for continuous operations
s = Material silt content (%)
U = Mean wind speed (miles per hour)
H = Drop height (feet)
M = Material moisture content (%)
and, Y = Dumping device capacity (yd^3),
  (Not Applicable for continuous loading/unloading)

Table L-5-17 presents the above parameters for all sources of fugitive particulates presented in Table L-5-16. Table L-5-18 presents the emission rates of fugitive particulate emissions of PM-10 and total suspended particulates (TSP) from all the above sources of fugitive particulate emissions.

The AP-42 methodology used to estimate fugitive particulate emissions from FFP-LP is expected to overestimate the actual emissions from the facility. The design and operation of the proposed facility will minimize the potential for fugitive emissions, for example by use of covered containers for storage of solid materials and by daily inspection and housekeeping procedures.

TABLE L-5-16

SOURCES OF FUGITIVE PARTICULATE EMISSIONS AT THE PROPOSED FFP-LP FACILITY

Solids Handling Operation	Batch/ Continuous	Quantity Handled (tons/yr)
Organic Area		
Bulk Solids Unloading	Batch	5,661
Dried Solids Loadout	Continuous	8,640
Kiln Ash ~~Solids~~ Loadout	Continuous	37,440
Inorganic Area		
Filter Cake Loadout	Batch	15,000
Bulk Solids Unloading	Batch	1,490
Stabilization Area		
Bulk Solids Unloading	Batch	46,080

TABLE L-5-17

FUGITIVE EMISSION ESTIMATION PARAMETERS FOR SOLIDS HANDLING OPERATIONS

Operation			Parameters				
	k(PM-10)	k(TSP)	s	U	H	M	Y
Organic Area							
Bulk Solids Unloading	0.36	0.73	100	8.5	6	20	35
Dried Solids Loadout	0.37	0.77	100	8.5	10	5	N/A
Kiln Ash ~~Solids~~ Loadout	0.37	0.77	100	8.5	10	16.7	N/A
Inorganic Area							
Filter Cake Loadout	0.36	0.73	100	8.5	13	60	35
Bulk Solids Unloading	0.36	0.73	100	8.5	1	10	35
Stabilization Area							
Bulk Solids Unloading	0.36	0.73	100	8.5	14	10	35

TABLE L-5-18

SUMMARY OF FUGITIVE PARTICULATE EMISSIONS FROM THE PROPOSED FFP-LP FACILITY

Solids Handling Operation	Fugitive Particulate Emission Rate			
	PM-10		TSP	
	lb/yr	ton/yr	lb/yr	ton/yr
Organic Area				
Bulk Solids Unloading	0.84		1.7	
Dried Solids Loadout	31.3		65.14	
Ash Solids Loadout	12.16		25.3	
Inorganic Area				
Filtercake Loadout	0.53		1.08	
Bulk Solids Unloading	0.15		0.3	
Stabilization Area				
Bulk Solids Unloading	63.54		128.84	
Total[20]	**108.52**	**(0.054)**	**222.36**	**(0.111)**

---

[20] The numbers in parentheses are the annual fugitive particulate emission rates in tons per year.

L.6.0 EXISTING AIR QUALITY

L.6.1 Meteorology and Climatology

The closest location to the FFP-LP site for which complete meteorological data are collected is Tampa Airport, located approximately 35 miles west northwest of the Polk County site. The next closest location to the site having complete meteorological data is Orlando airport, approximately 70 miles northeast of the site. The climate in Tampa is influenced by coastal effects that are less prominent in inland areas. Tampa meteorological data may not be entirely representative of conditions in Polk County, which may illustrate some characteristics similar to the Orlando area. Data from both the Tampa and Orlando areas are therefore discussed in this section. Data are from The Weather Almanac[21].

The average monthly temperature in the Tampa area ranges from a high of 82.3°F in August to a low of 59.8°F in January. Recorded temperature extremes range from 99°F, recorded in June, to 18°F, recorded in December. Heating degree days range from a normal of 228 in the month of January to a normal of zero from April to October. The value for each day is obtained by subtracting the mean temperature for that day from 65°F.

The average monthly temperature in the Orlando area ranges from a high of 82.3°F in July to a low of 60.5°F in January. Recorded extremes of temperature range from 102°F, recorded in May, to 19°F, recorded in January. Heating degree days range from a normal of 212 in the month of January to a normal of zero from April to October.

The Gulf of Mexico and Tampa Bay, approximately 35 miles from the site, have a moderating influence on the climate of the Tampa area and are expected to have some effect on Polk County. The climate in the area is characterized

---

[21] Ruffner, J. and Bair, F., The Weather Almanac. Gale Reasearch Company, Detroit, Michigan, 1987.

by long, warm, and very humid summers and cool and mild winters. The average date of the first winter freezing temperature in the Tampa area is around December 26 and the average date of the last freezing temperature is around January 10. The first freezing temperature in Orlando occurs around December 17, and the last around January 31. Freezing temperatures occur on an average of two to three days per year in Tampa and Orlando.

Precipitation in the Tampa and Orlando areas is not distributed uniformly throughout the year; 60 percent occurs during the summer months. The annual average precipitation in the Tampa area is 46.73 inches, and that for Orlando is 47.82 inches. The lowest recorded annual precipitation in the Tampa area was 28.89 inches, and the highest was 66.46 inches. The lowest annual precipitation in the Orlando area was 38.12 inches, and the highest was 68.74 inches. Snow is extremely rare throughout central Florida, however traces may occur in December and January.

Most of the rain in the summer months in the Tampa and Orlando areas comes from thunderstorms, and coastal storms are responsible for most of the rain throughout the remainder of the year. Thunderstorms characteristically occur in the late afternoon in the summer months, and the Tampa area is threatened by tropical storms several days during most years. Hurricanes can cause heavy rains during the summer months, although winds rarely reach hurricane force in the Tampa area. The greatest risk of hurricanes in the area is in June and October. The highest daily rainfall recorded in the Tampa area was 12.1 inches, and such events have been associated with hurricanes. The Orlando area, being further inland, is less likely to be affected by hurricanes, and the maximum recorded daily rainfall in the Orlando area was about 8 inches.

Annual wind roses for the Tampa and Orlando areas are included in Figures L-6-1 and L-6-2. These data were recorded during the 31-year period 1948 through 1978. The wind rose for 1981 through 1984 is shown in Table L-6-2a. Prevailing winds in the Tampa Area are from the east from May through August, and from the east northeast and north northeast during the remaining months. Winds in the Tampa area are from the northeast quadrant approximately 39 percent of the time, however westerly afternoon and evening breezes occur most months of the year. The average wind speed in the Tampa Area is approximately 8.5 mph, with short term gusts up to about 52 mph. Winds greater than 25 mph are not common and are generally associated with tropical disturbances.

Prevailing winds in the Orlando Area are from the southeast through southwest from February through July, and from the east northeast through north during the remaining months. The wind in the Orlando area is from the southeast/southwest quadrant approximately 22 percent of the time, and from the northeast quadrant 26 percent of the time. The average wind speed is approximately 8.6 mph, with short term gusts up to about 62 mph. Wind speeds greater than 25 mph are not common in the Tampa area and are generally associated with tropical storms.

L.6.2 Ambient Air Quality

Information in this section is taken primarily from the 1987 Florida Air Quality Report[22]. The 1988 Florida Air Quality Report was not available as this section was written.

L.6.2.1 Ambient Air Quality Data for Criteria Pollutants

The proposed incinerator will emit criteria pollutants including sulfur dioxide (SO_2), inhalable particulate (PM-10), nitrogen oxides (NO_x), carbon

---

[22] FDER, 1987 Air Quality Report, FDER Division of Air Resources Management, 1988.

monoxide (CO), lead (Pb), and ozone (O_3) precursors (volatile organic substances) during normal operations. Ambient air quality data for all criteria pollutants are therefore discussed in this section. The State of Florida reports ambient air quality data by county in the Florida Annual Air Quality Reports. Ambient air quality monitoring data for Polk County and adjacent Hillsborough, Manatee, and Highlands Counties are listed in Figures L-6-3 through L-6-10.

Ambient air quality monitoring stations for particulate matter and lead are located in Polk, Highlands, Hillsborough, and Manatee Counties, and air quality monitoring stations for sulfur dioxide are located in Polk, Manatee, and Hillsborough Counties. Ambient concentrations of sulfur dioxide in all three counties were less than 50 percent of State primary and Federal secondary standards in 1987 as illustrated in Figures L-6-3 through L-6-5. Ambient concentrations of particulate, shown in Figures L-6-6 and L-6-7, were below State primary and Federal secondary standards in Polk, Manatee, and Highlands Counties in 1987 and exceeded standards in Hillsborough County. The State and Federal ambient air quality standard for lead was exceeded only in one location in Hillsborough County in 1987, and was not exceeded in Polk, Highlands, or Manatee Counties.

No monitoring stations for ozone or carbon monoxide are located in Polk County. These pollutants are generally associated with mobile sources, and monitoring stations for these pollutants are located in adjacent Hillsborough (CO and O_3) and Manatee Counties (O_3 only), both primarily urban areas. Ambient concentrations of carbon monoxide were less than 66 percent of State and Federal standards in Hillsborough County, in 1987 as shown in Figures L-6-8 and L-6-9. Monitored ambient ozone concentrations were below State and

Federal standards in Manatee County in 1987 and exceeded State and Federal standards in Hillsborough County as shown in Figure L-6-10. The closest nitrogen oxide monitoring stations to Polk County are in Jacksonville and Miami, both remote from Polk County. It is not possible to determine nitrogen oxide concentrations in Polk County from these data, therefore the data have not been presented in this section.

Ambient air quality data from monitoring stations outside of Polk County are not necessarily representative of conditions in Polk County. These data may in some cases be used to provide general information on the ambient air quality in South Central Florida. However, ambient air quality monitoring data from the western portion of Hillsborough and Manatee Counties are not representative of the air quality in the region as a whole, as these areas are dominated by Tampa, a densely populated metropolitan and industrial area, whereas Polk county is a predominantly rural area. Ambient air quality in these areas is greatly influenced by local mobile and stationary sources that do not influence the air quality in Polk County.

L.6.2.2 Federal and State Attainment Status for Criteria Pollutants

Florida has set the State primary ambient air quality standards equivalent to Federal secondary standards for particulate matter and sulfur dioxide. Standards for other criteria pollutants are identical to Federal Standards.

The air quality in Polk County is classified as better than Federal and Florida State Ambient Air Quality Standards for total suspended particulate, sulfur dioxide, and lead. The air quality in Polk County cannot be classified for carbon monoxide, nitrogen oxides, and ozone, as no monitoring stations for these pollutants are operated in the county. Air quality in Polk County is assumed by the State and Federal EPA to be better than Federal and State standards. Parts of western Hillsborough County (Tampa), which lies west of Polk County, are designated nonattainment areas for ozone, particulate, and lead[23]. High ambient concentrations of particulate and ozone in urban areas are generally attributed to mobile sources. The emissions of criteria pollutants from the FFP-LP incinerator will not have a significant impact on the Tampa metropolitan area or any other Federal or State nonattainment area.

EPA recently promulgated ambient air quality standards for PM-10 (the fraction of total particulate with a particle size of less than 10 microns) to replace the primary ambient air quality standards for total particulate. Federal standards for ambient concentrations of PM-10 have been incorporated into the Florida Air Regulations, and will be incorporated into the revised Florida State Implementation Plan (SIP), which outlines air quality control strategies for the state. State and Federal PM-10 non-attainment areas have not yet been identified, and Polk County and the South Central Florida region have not yet been classified with respect to the Federal PM-10 ambient air quality standard. It is expected that areas classified as in attainment of State and Federal air quality standards for total particulate will also be in attainment of Federal and State air quality standards for PM-10.

---

[23] FDER; 1987 Air Quality Report, FDER Department of Environmental Regulation, 1988.

FIGURE L-6-1

ANNUAL WIND ROSE FOR THE TAMPA AREA

1948-1978

TPA TAMPA, FL

CLASS 7

CEILING-VISIBILITY

WIND GRAPH

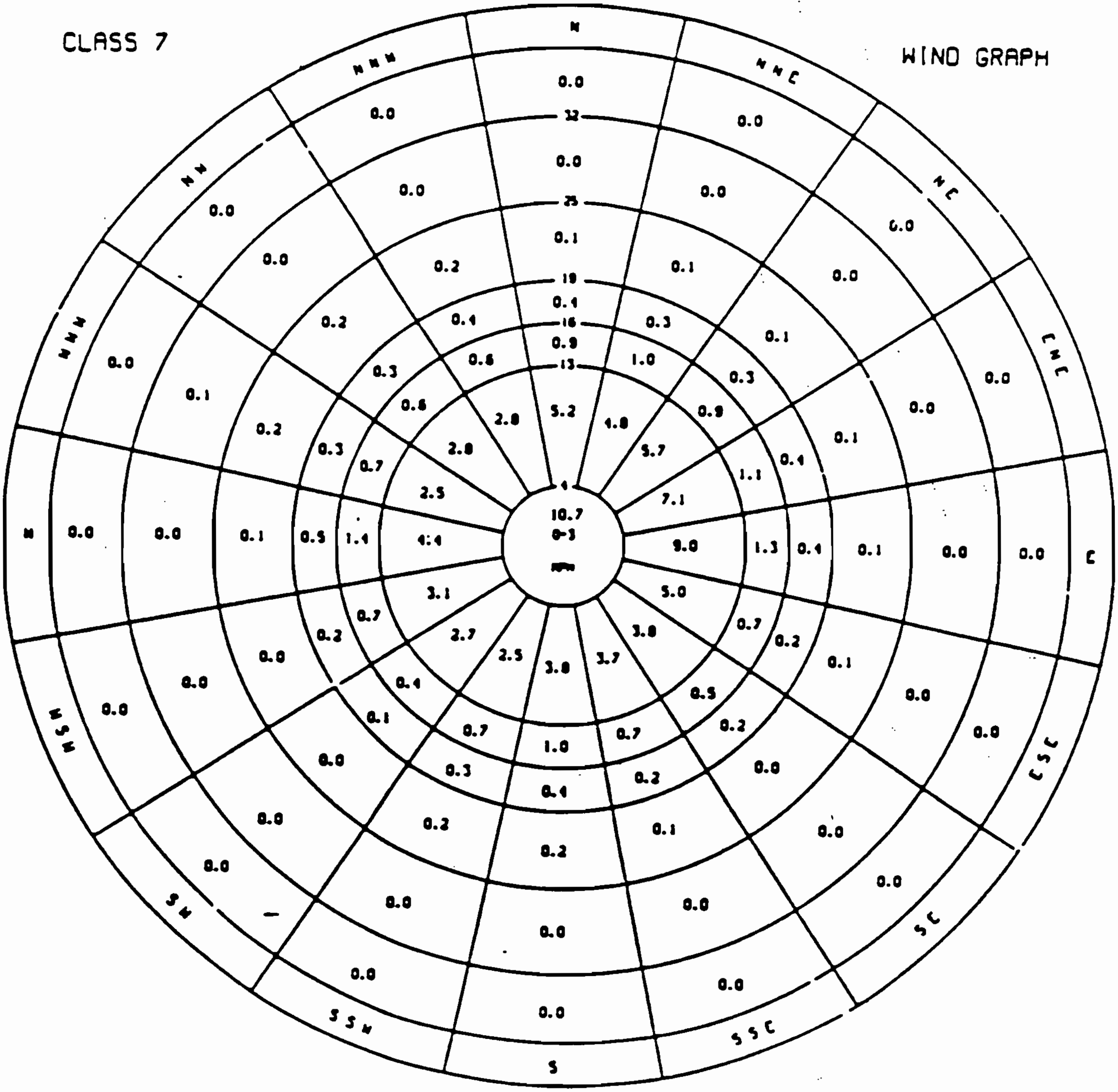

FIGURE L-6-2

ANNUAL WIND ROSE FOR THE ORLANDO AREA

1948-1978

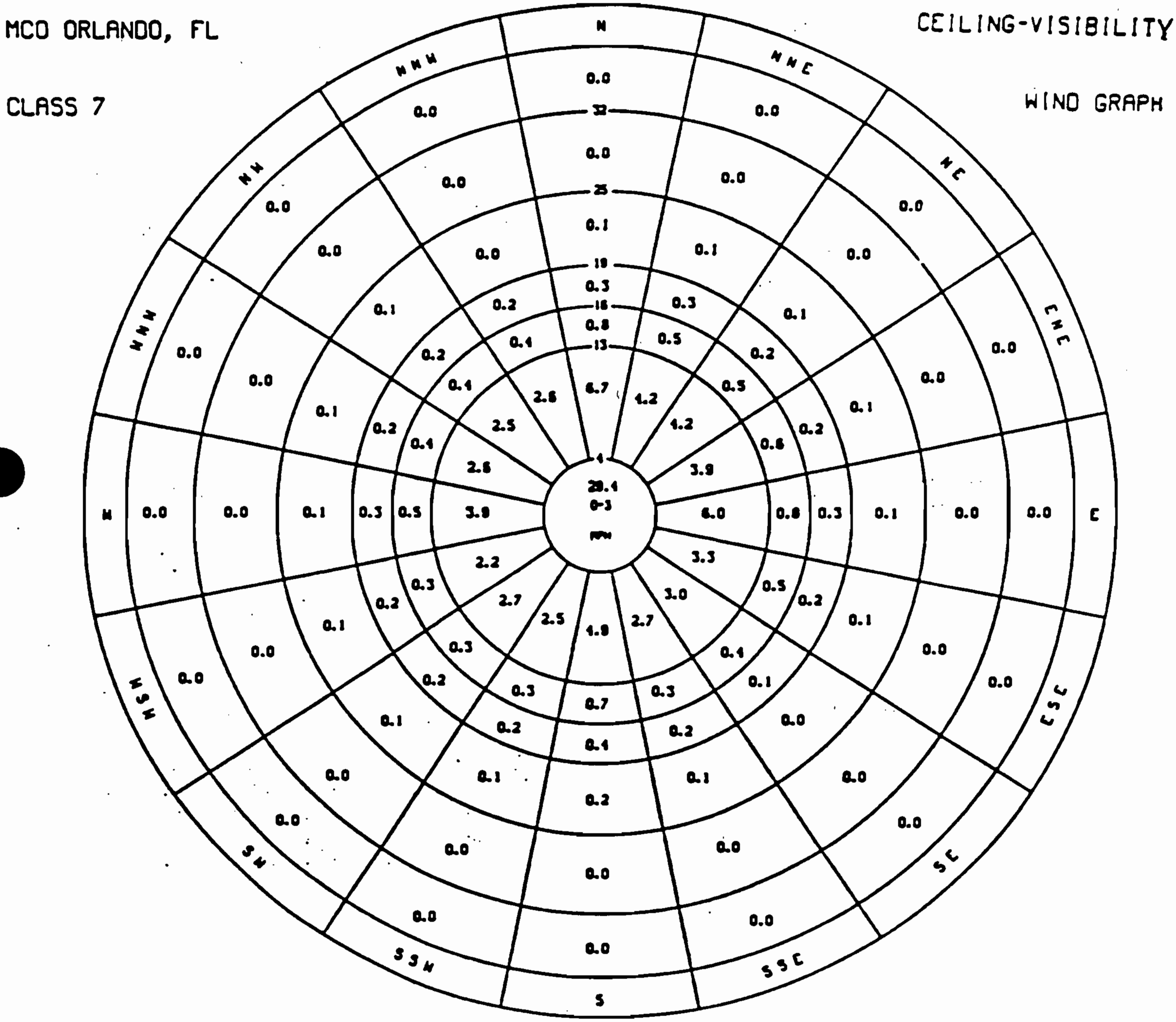

This table represents a new
addition to the permit application

FIGURE L-6-2A

ANNUAL WIND ROSE FOR THE LAKELAND AREA

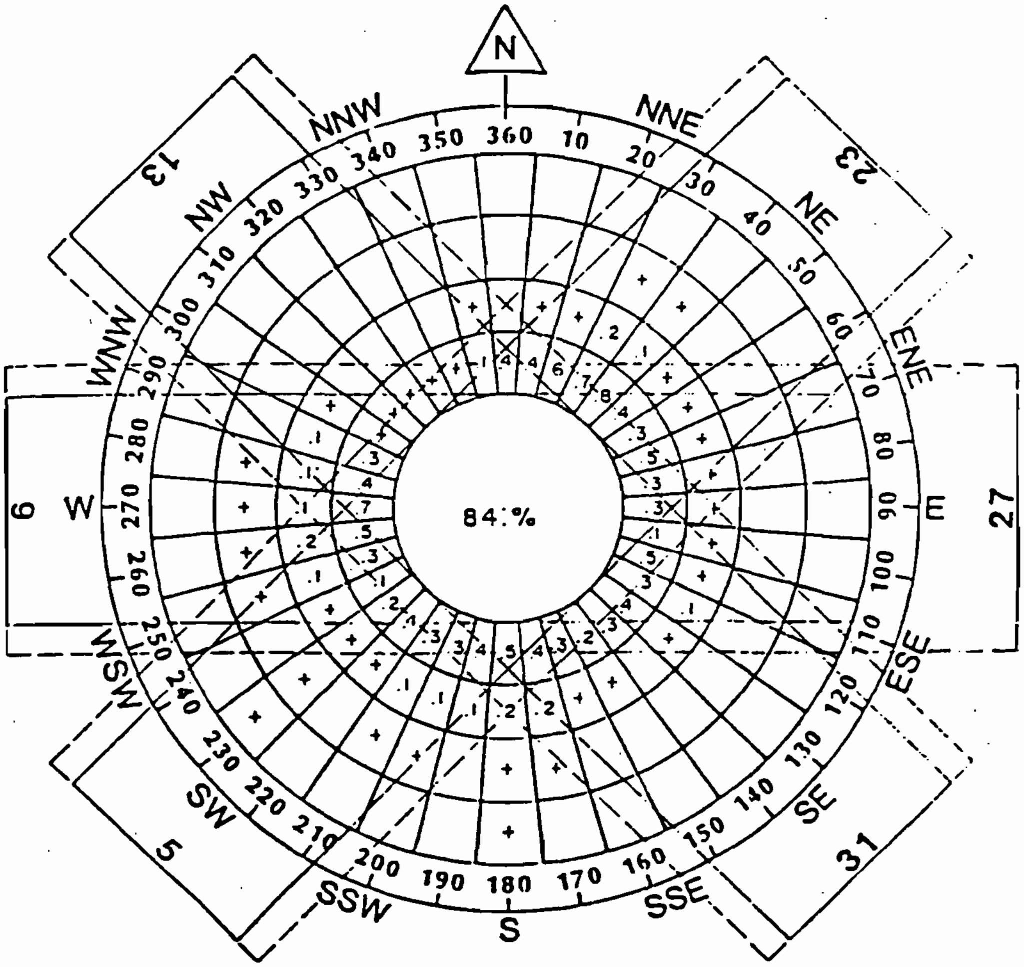

ALL WEATHER WIND ROSE

WIND COVERAGE DATA		
RUNWAY	10 KTS	13 KTS
9 - 27	92.1 %	95.8 %
5 - 23	93.6 %	97.1 %
13 - 31	90.0 %	95.4 %
COMBINED	97.9 %	99.6 %

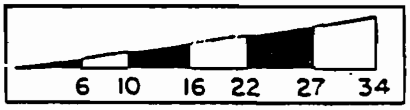

SCALE IN KNOTS

SOURCE: LAKELAND MUNICIPAL AIRPORT
STATION: LAKELAND, FLORIDA
PERIOD: 1981 – 1984

FIG[illegible]L-6-3

FLORIDA AMBIENT AIR QUALITY DATA

SULFUR DIOXIDE - 3 HOUR AVERAGE

Sulfur Dioxide

1987 Second Highest 3-Hour Average

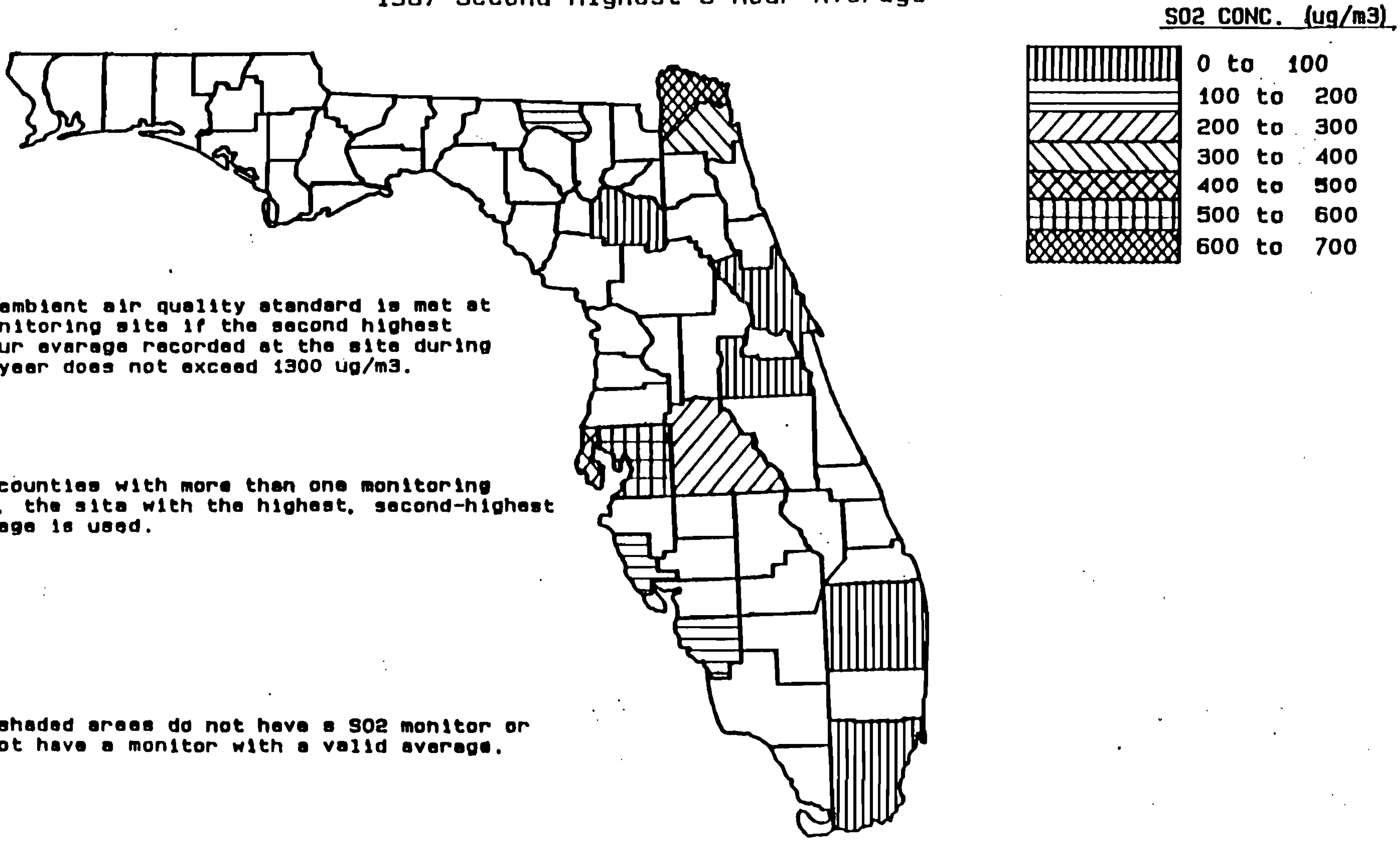

The ambient air quality standard is met at a monitoring site if the second highest 3-hour average recorded at the site during the year does not exceed 1300 ug/m3.

For counties with more than one monitoring site, the site with the highest, second-highest average is used.

Non-shaded areas do not have a SO2 monitor or do not have a monitor with a valid average.

FIGURE L-6-4

FLORIDA AMBIENT AIR QUALITY DATA

SULFUR DIOXIDE - 24 HOUR AVERAGE

Sulfur Dioxide

1987 Second Highest 24-Hour Average

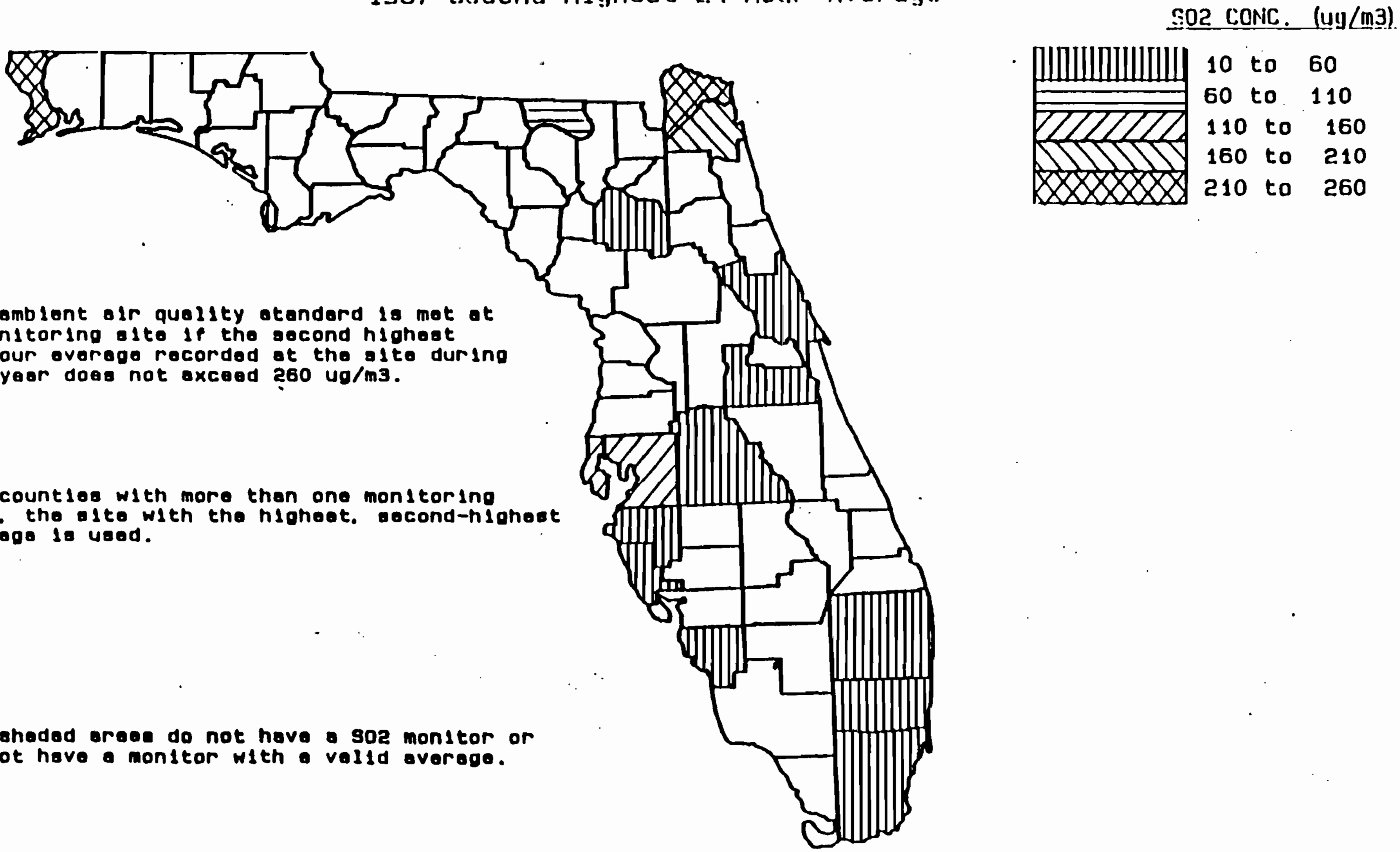

The ambient air quality standard is met at a monitoring site if the second highest 24-hour average recorded at the site during the year does not exceed 260 ug/m3.

For counties with more than one monitoring site, the site with the highest, second-highest average is used.

Non-shaded areas do not have a SO2 monitor or do not have a monitor with a valid average.

FIGURE L-6-5

FLORIDA AMBIENT AIR QUALITY DATA

SULFUR DIOXIDE - ANNUAL AVERAGE

Sulfur Dioxide

1987 Annual Arithmetic Mean

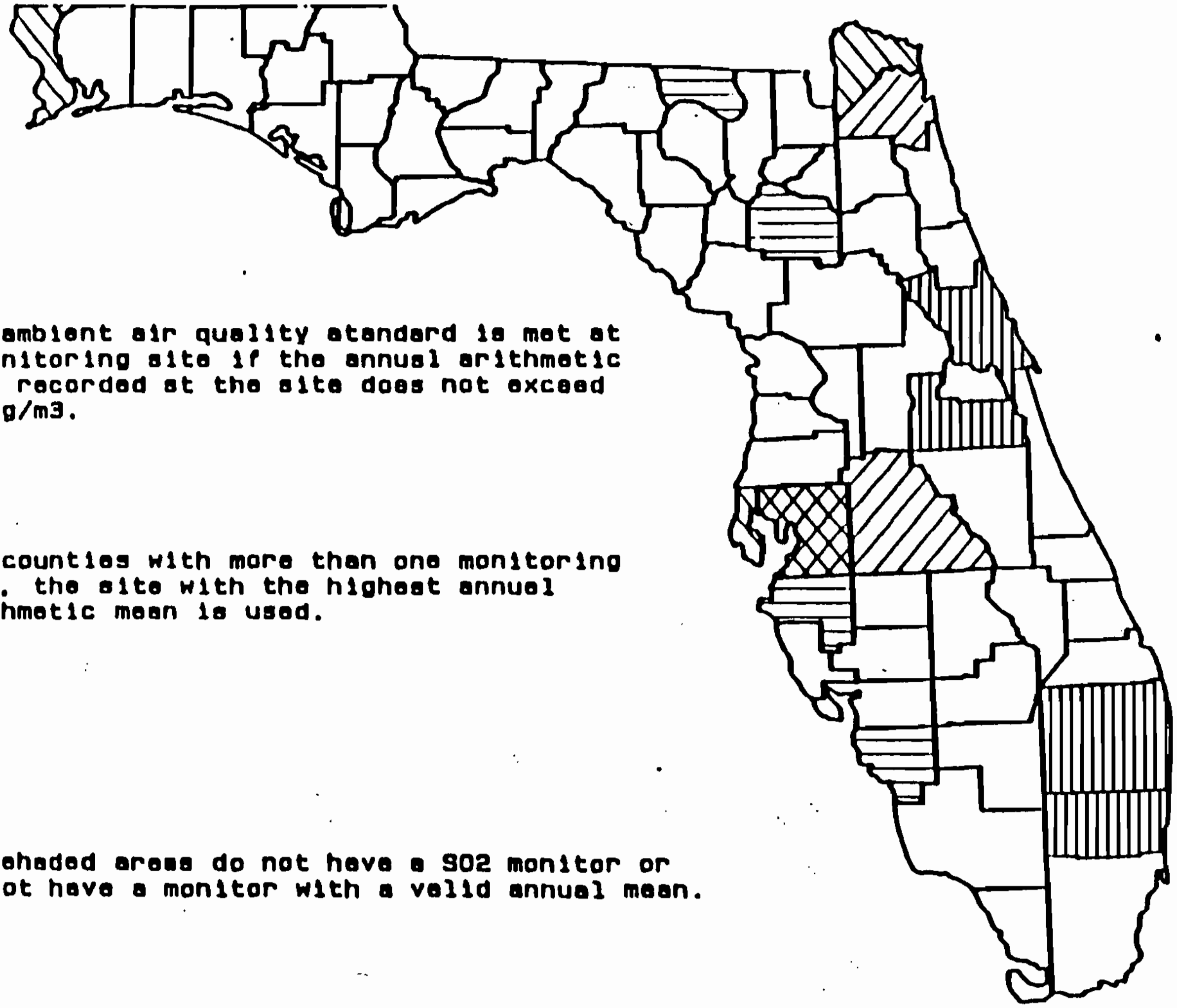

S02 CONC. (ug/m3)

▥	0 to 5
▤	5 to 10
▨	10 to 15
▧	15 to 20
▩	20 to 25

The ambient air quality standard is met at a monitoring site if the annual arithmetic mean recorded at the site does not exceed 60 ug/m3.

For counties with more than one monitoring site, the site with the highest annual arithmetic mean is used.

Non-shaded areas do not have a S02 monitor or do not have a monitor with a valid annual mean.

FIGURE L-6-6

FLORIDA AMBIENT AIR QUALITY DATA

TOTAL PARTICULATE - 24 HOUR AVERAGE

Particulate Matter

1987 Second Highest 24-Hour Average

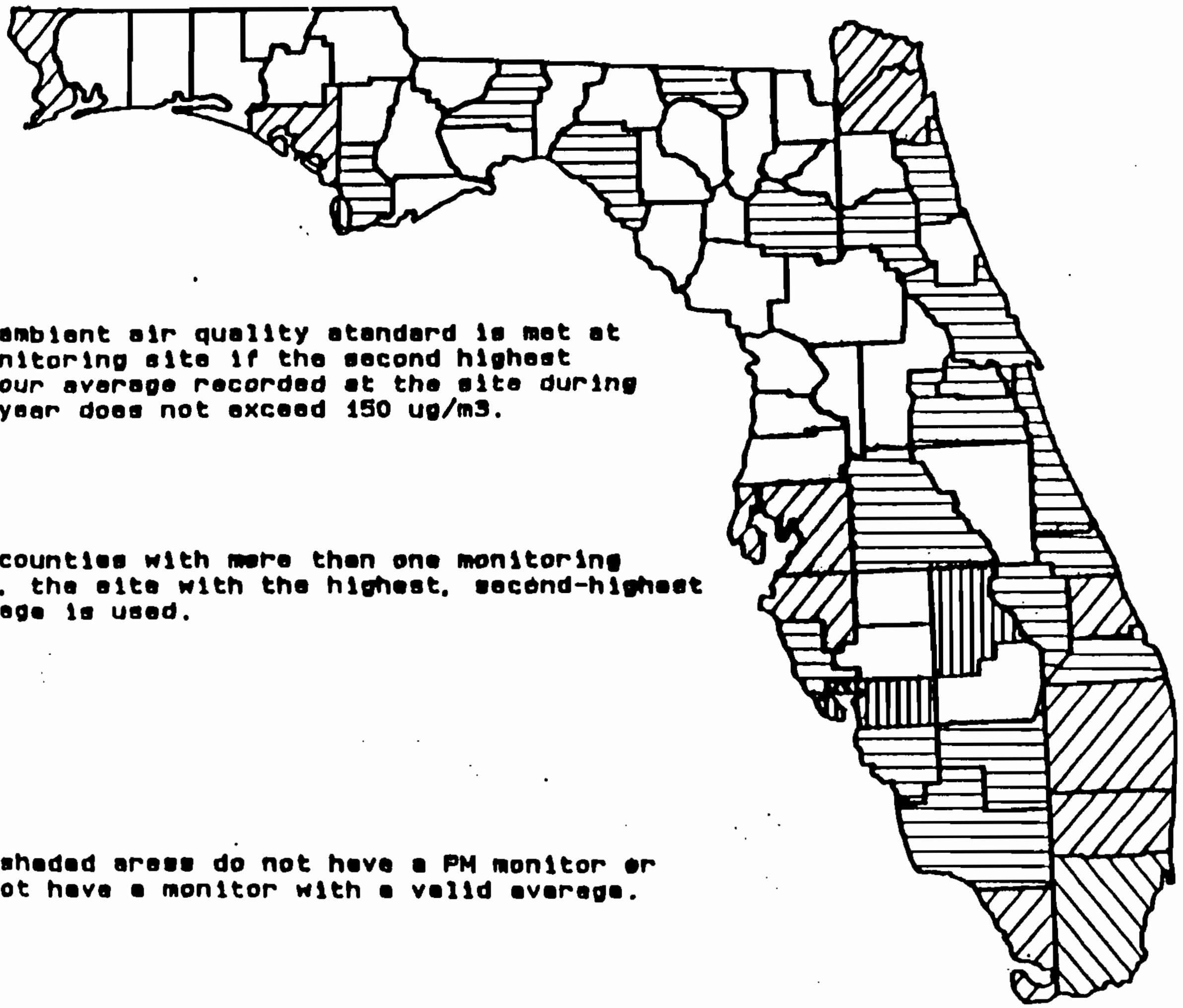

The ambient air quality standard is met at a monitoring site if the second highest 24-hour average recorded at the site during the year does not exceed 150 ug/m3.

For counties with more than one monitoring site, the site with the highest, second-highest average is used.

Non-shaded areas do not have a PM monitor or do not have a monitor with a valid average.

FIGURE L-6-7

FLORIDA AMBIENT AIR QUALITY DATA

TOTAL PARTICULATE - ANNUAL AVERAGE

Particulate Matter

1987 Annual Geometric Mean

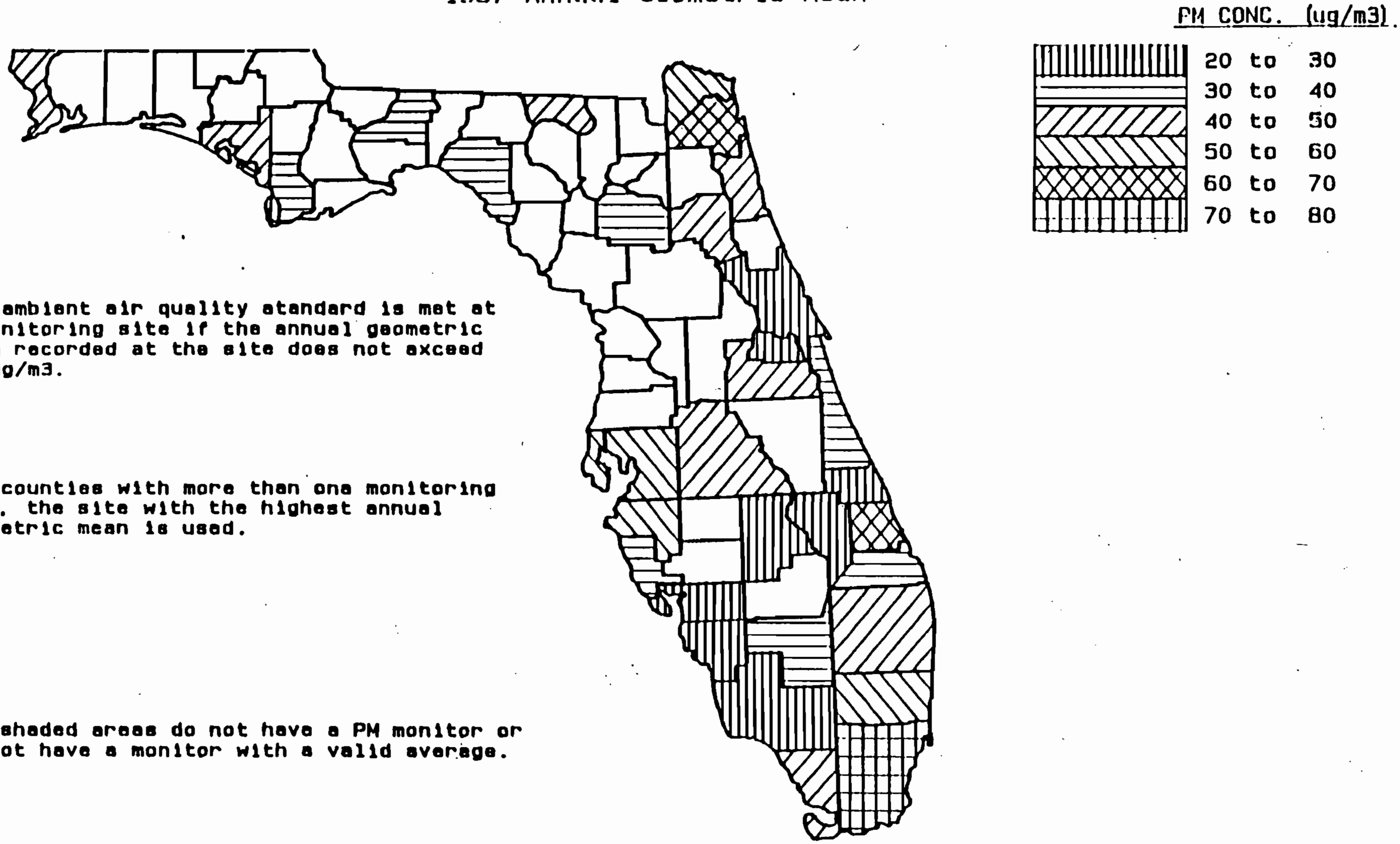

The ambient air quality standard is met at a monitoring site if the annual geometric mean recorded at the site does not exceed 60 ug/m3.

For counties with more than one monitoring site, the site with the highest annual geometric mean is used.

Non-shaded areas do not have a PM monitor or do not have a monitor with a valid average.

FIGURE L-6-8

FLORIDA AMBIENT AIR QUALITY DATA

CARBON MONOXIDE - 1 HOUR AVERAGE

Carbon Monoxide

1987 Second Highest 1-Hour Average

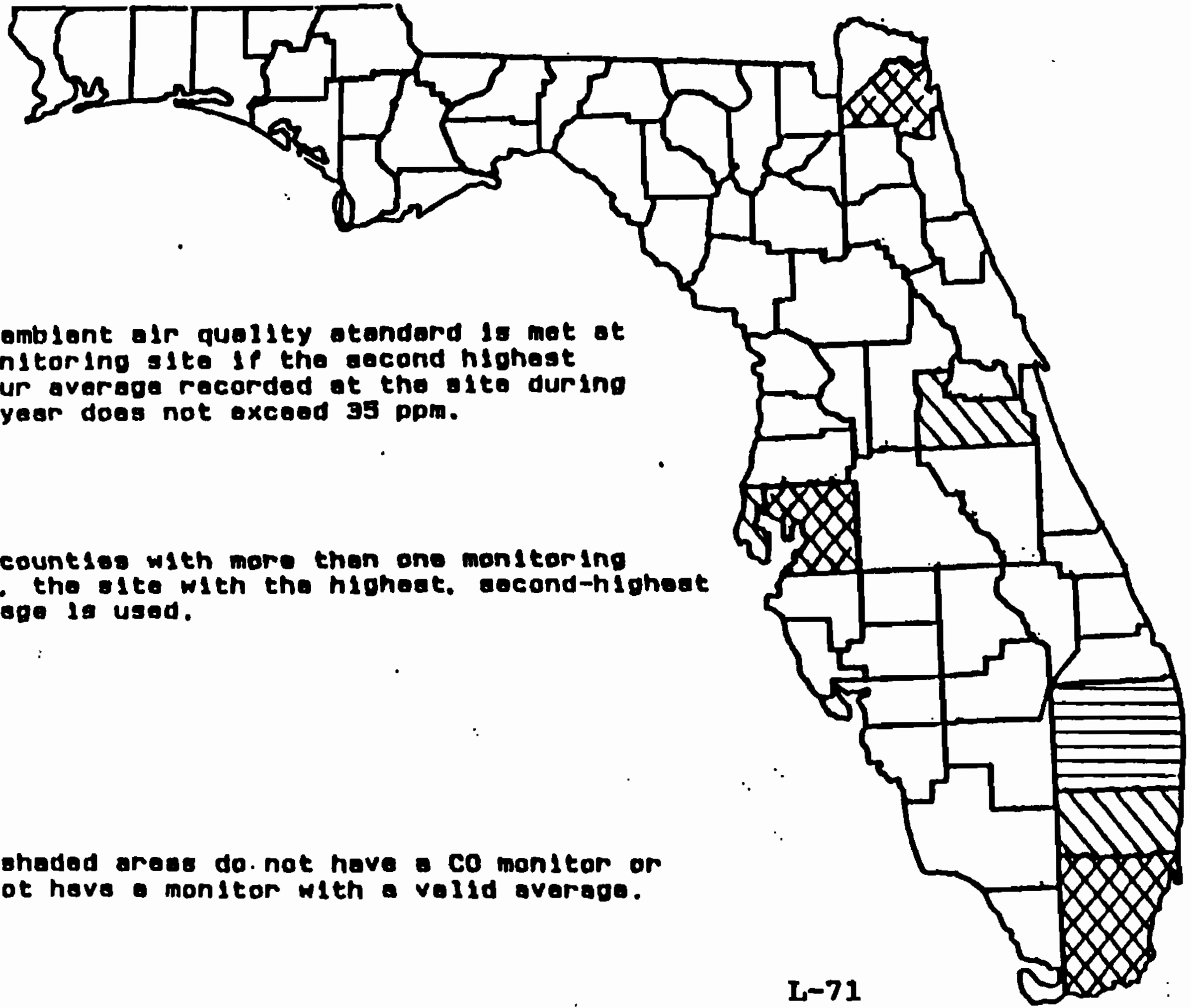

CO CONC. (ppm)

▥	0 to 3
☰	3 to 6
▨	6 to 9
▧	9 to 12
▩	12 to 15

The ambient air quality standard is met at a monitoring site if the second highest 1-hour average recorded at the site during the year does not exceed 35 ppm.

For counties with more than one monitoring site, the site with the highest, second-highest average is used.

Non-shaded areas do not have a CO monitor or do not have a monitor with a valid average.

FIGURE L-6-9

FLORIDA AMBIENT AIR QUALITY DATA

CARBON MONOXIDE - 8 HOUR AVERAGE

Carbon Monoxide

1987 Second Highest 8-Hour Average

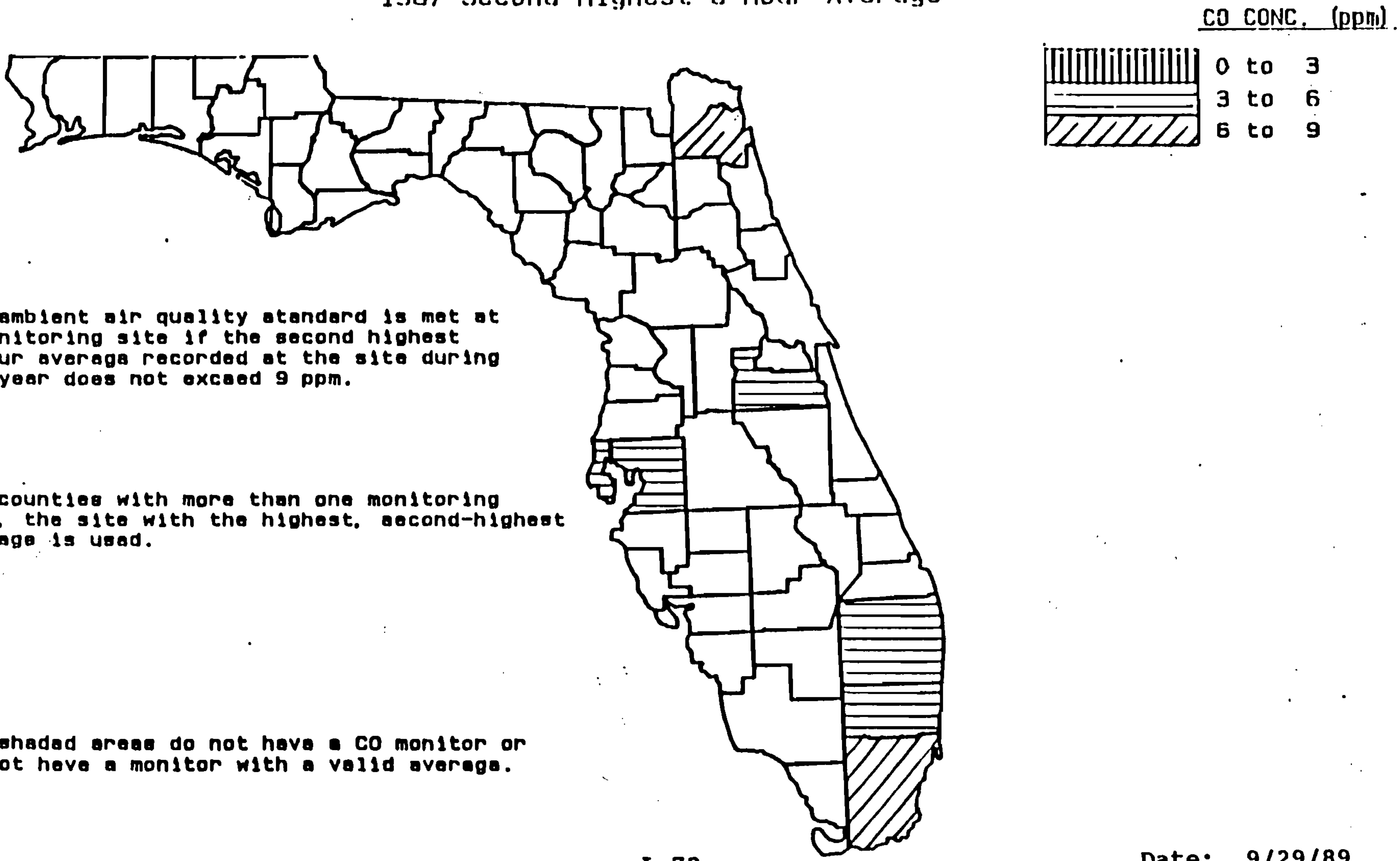

The ambient air quality standard is met at a monitoring site if the second highest 8-hour average recorded at the site during the year does not exceed 9 ppm.

For counties with more than one monitoring site, the site with the highest, second-highest average is used.

Non-shaded areas do not have a CO monitor or do not have a monitor with a valid average.

Date: 9/29/89
Revision: 1

FIGURE L-6-10

FLORIDA AMBIENT AIR QUALITY DATA

OZONE - FOURTH HIGHEST 1-HOUR AVERAGE

Ozone

1985-1987 Fourth Highest 1-Hour Average

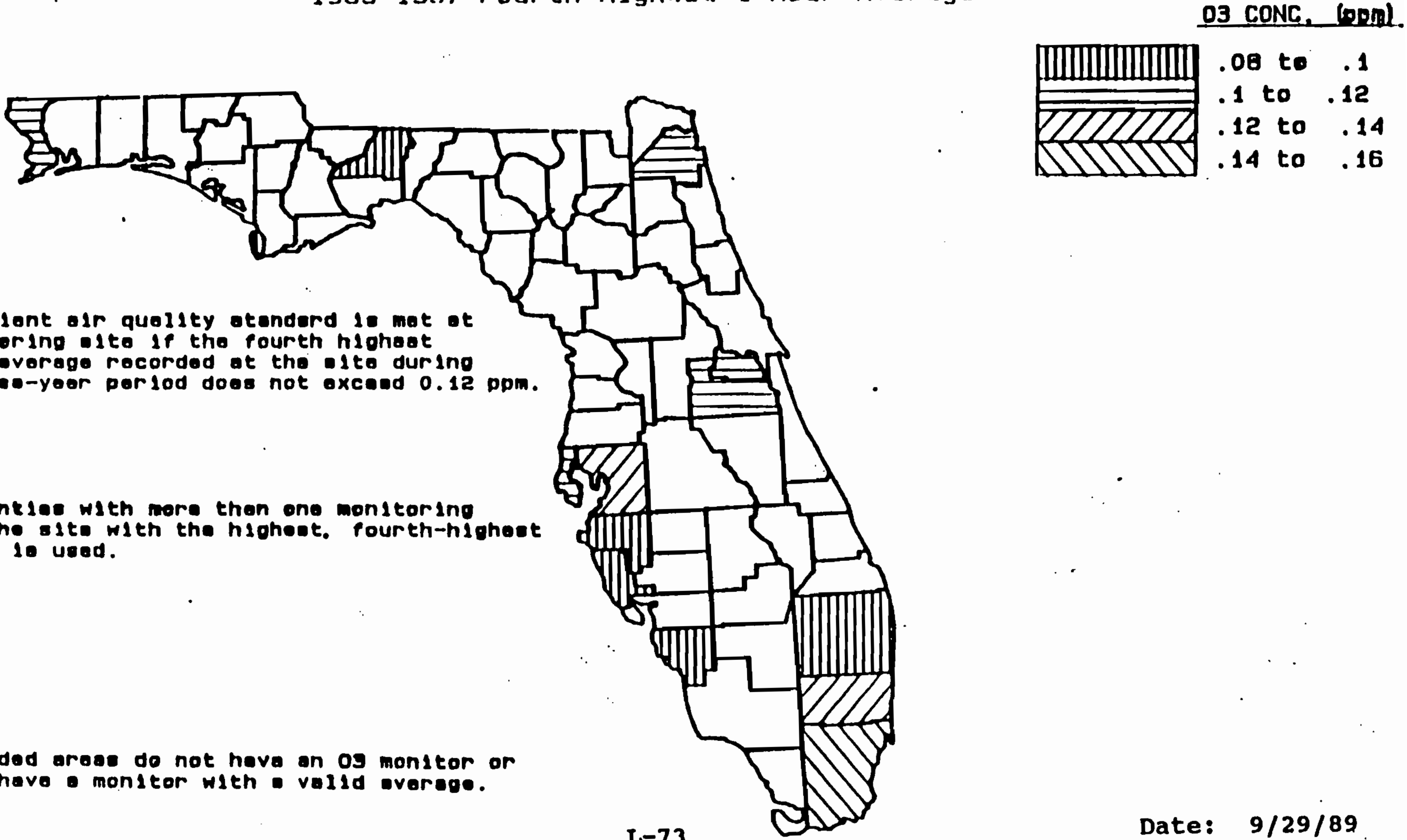

The ambient air quality standard is met at a monitoring site if the fourth highest 1-hour average recorded at the site during the three-year period does not exceed 0.12 ppm.

For counties with more than one monitoring site, the site with the highest, fourth-highest average is used.

Non-shaded areas do not have an O3 monitor or do not have a monitor with a valid average.

L.7.0 AIR QUALITY MODELING ANALYSIS

Atmospheric dispersion analyses were performed to estimate ambient air concentrations resulting from stack and fugitive emissions of FAC Table 500-2 pollutants and metals. The dispersion analyses were carried out in accordance with the protocol (Appendix L-27) submitted to the Florida State Department of Environmental Regulation (DER). Comments received from DER (Rodgers, telephone conversation with Robert Lanza, ICF/KE, May 1989) were also incorporated into the methodology. Appendix L-27 contains copies of the protocol and corresponding response received from Florida DER. The following air pollutant emission sources were included in the dispersion analysis:

1. Hazardous waste incinerator
2. Inorganic waste treatment system
3. Carbon adsorber/chiller system used to control emissions from organic liquid storage tank operations,
4. Fugitive emission sources (treated as 10 separate area sources) of volatile organic compounds and particulate matter and
5. Steam boiler.

The remaining sources of air contaminants were not modeled mainly because these are intermittent sources of air contaminants. Emission sources such as silos emit air contaminants only during material transfer. The transfer operations do not last for more than a few minutes.

L.7.1 GEP Stack Height Analysis

L.7.1.1 Incinerator Stack GEP Analyses

An analysis was performed to study the effects of nearby structures on the dispersion of the emissions from the proposed incinerator, and to determine the Good Engineering Practice (GEP) stack height for the incinerator. Emissions from a stack whose height is less than the GEP stack height can result in excessive concentrations of any air pollutant in the immediate vicinity of the source as a result of atmospheric downwash, eddies, or wakes which may be created by the source itself, nearby structures, or nearby obstacles. EPA guidelines (EPA 1985) define the term "nearby" as "that distance up to five times the lesser of the height or the width dimension of the structure, but not greater than 0.8 km (0.5 miles)". In the event that "nearby" structures are present, the GEP stack height is determined by the following equation:

$$H_{GEP} = H_B + 1.5L_B$$

where:

H_{GEP} = GEP stack height
H_B = Height of the nearby structure, and
L_B = The lesser of the height of the structure, or the maximum projected width normal to the wind direction.

A description of the facility is provided in Section 2.0. There are no significant topographic features or structures in the vicinity of the proposed site. The highest proposed building at the site is estimated to be 30 feet high. In addition, the spray dryer absorber (SDA) having an outer diameter of approximately 37 feet and a height of 82 feet could be a significant structure affecting the GEP stack height. Based on the equation above, the worst case GEP stack height required to ensure that there will be no adverse effects due to the 30-foot building is 75 feet. Based on the SDA, the GEP stack height required would be approximately 138 feet. The proposed stack height of 200 feet exceeds the GEP stack height requirements based on both the structures and therefore downwash analysis is not required.

L.7.1.2 Inorganic Waste Treatment System Stack GEP Analysis

The GEP stack height requirement for the inorganic waste treatment system scrubber stack will not be influenced by the SDA since the SDA lies beyond 5 times the diameter of the SDA which is the smaller of the maximum projected width and the height. Further, if the 30-foot building were situated so as to cause downwash, the GEP stack height that would be required to overcome the downwash effects is 75 feet. The proposed stack height of 100 feet exceeds the minimum GEP stack height requirement and therefore downwash analysis is not required.

L.7.1.3 Carbon Adsorption System Stack GEP Analysis

The carbon adsorption system is an intermittent source of emissions of volatile organic compounds at very low rates. The GEP stack height requirement for the carbon adsorption system stack will not be influenced by the SDA since the SDA lies beyond 5 times the diameter of the SDA, which is the smaller of the maximum projected width and the height. If the 30-foot tall building were situated so as to cause downwash, the GEP stack height that would be required to overcome the downwash effects is 75 feet, the proposed height of the carbon adsorber system stack. Therefore, downwash analysis is not required.

L.7.1.4 Boiler Stack GEP Analysis

The GEP stack height requirement for the boiler stack will not be influenced by the SDA since the SDA lies beyond 5x the diameter of the SDA, which is the smaller of the maximum projected width and height. The 30-foot high utilities building is the nearest structure to the boiler stack. The GEP stack height that would be required to overcome the downwash effect is 75 feet. The proposed stack height of 100 feet exceeds the GEP stack height requirements and therefore downwash analysis is not required.

L.7.2 Screening Modeling

L.7.2.1 Incinerator Stack Emissions

The topographic maps of the region indicate that there are no terrain features having elevations above the incinerator stack. Therefore, the EPA-accepted model for simple terrain, PTPLU-2 was used for screening purposes. Based on the land use patterns and the existing population within a 3 kilometer radius of the proposed source for determining land use purposes, "rural" dispersion coefficients were used for all steps of the dispersion modeling analysis. Table L-7-1 presents the incinerator stack physical and exhaust parameters used in the modeling.

PTPLU-2 predicts the maximum short term (1-hour) concentrations for several wind speeds ranging from 0.5 meters per second to 20 meters per

TABLE L-7-1

INCINERATOR STACK PARAMETERS

Physical Height	200 feet	(60.97 meters)
Stack base elevation	139 feet	(42.38 meters)
Inside diameter	5.5 feet	(1.678 meters)
Exhaust Flow Rate, ACFM	68,555	(32.38 m^3/s)
Exhaust Temperature	365°F	(458°K)

second, for each of the six classes of atmospheric stability and reports the results separately for each atmospheric stability class. The highest concentration for any combination of wind speed and stability class is predicted to be 2.86 $\mu g/m^3$ for a 1 g/s emission of the air contaminant occurs at 568 meters. This occurs under the most unstable atmospheric conditions represented by stability A category. Appendix L-28 contains a copy of the PTPLU-2 run which produced this result. This point therefore was used to set the receptor distances for the refined analysis. The purpose of the PTPLU-2 model is to establish the receptor locations for the refined analysis as outlined in the protocol. The results of PTPLU-2 only provide partial information, i.e., the short term impacts. These results cannot be extrapolated to obtain long term impacts. Analysis of long term impacts requires refined modeling. Therefore, the results obtained using the PTPLU-2 model were used only to the extent of determining the receptor locations used during the refined analysis.

L.7.2.2 Inorganic Waste Treatment System Stack Emissions

The EPA-accepted model for simple terrain, PTPLU-2, was used to screen the impacts of the emissions from the inorganic waste treatment scrubber stack. Since the scrubber will be operated at 2 exhaust rates, 6,000 acfm and 1,000 acfm, modeling runs were completed for each of the two sets of parameters. The same options as used for the screening analysis of the incinerator stack emissions were used for this screening. Table L-7-2 presents the inorganic waste treatment system stack physical and exhaust parameters used in the modeling. For the 6,000 acfm exhaust rate, a maximum concentration of 72.22 $\mu g/m^3$ is predicted to occur for a 1 g/s emission of each air contaminant from the scrubber stack, at a distance of 313 meters from the stack. For the 1,000 acfm exhaust rate, a maximum concentration of 203.43 micrograms per cubic meter is predicted to occur for a 1 g/sec emission of each contaminant at a distance of 185 m from the stack. Table L-7-3 presents the maximum predicted impacts of inorganic waste treatment system emissions for criteria pollutants and HCl based on emission rates provided in Appendix L-2. Appendix L-29 contains a copy of the two PTPLU-2 runs which produced these result.

TABLE L-7-2

INORGANIC WASTE TREATMENT SYSTEM STACK PARAMETERS

Physical Height	100 feet	(30.49 meters)
Stack base elevation	139 feet	(42.38 meters)
Inside diameter	2.0 feet	(0.61 meters)
Exhaust Flow Rate: High	6,000	(2.83 m^3/s)
Low	1,000	(0.47 m^3/s)
Exhaust Temperature	68°F	(293.3°K)

TABLE L-7-3

MAXIMUM PREDICTED INORGANIC WASTE TREATMENT SYSTEM STACK EMISSION IMPACTS FOR CRITERIA POLLUTANTS AND HYDROCHLORIC ACID[25]

Pollutant	Averaging Period	Maximum Impact $\mu g/m^3$	Distance from Stack (meters)	NAAQS ($\mu g/m^3$)	FLAAQS ($\mu g/m^3$)
NO_2	1-hour	0.390[26]	313	100	100
HCl	1-hour	0.015[27]	313	N/A	N/A

---

[25] Criteria pollutants other than NO_2 will not be detectable in the caustic scrubber exhaust gas.

[26] Both the national and the Florida ambient air quality standards for NO_2 are annual average concentrations. The annual average impact of NO_2 will be much lower than the predicted 1-hour average concentration and therefore will be much lower than the applicable standards.

[27] There are no applicable ambient air quality standards for HCl. The reference air concentration (RAC) of HCl, which is a health-based standard proposed by EPA in the <u>Draft Guidance on Metals and Hydrogen Chloride Controls for Hazardous Waste Incinerators, March 1989</u>, is 150 $\mu g/m^3$ averaged over 3 minutes. The impact of HCl averaged over 3 minutes obtained using the procedure given in this Draft Guidance Document is 0.254 $\mu g/m^3$.

L.7.2.3 Carbon Adsorption/Chiller System Stack Emissions

As described earlier, the carbon adsorption/chiller system is an intermittent source of emissions. The scenario where the carbon adsorption/chiller system is used to control the emissions resulting from the unloading of tank trucks and rail cars bearing high-Btu liquids is examined, since it represents the worst case situation.

As originally configured, the carbon adsorption/chiller system was to exhaust at -5°F (five degrees below zero) at a height of about 6 feet above the ground. Under such conditions the plume would not be naturally buoyant and would also have a tendency to slump owing to its high density. These circumstances proved conceptually very difficult to model since the more common atmospheric dispersion models are constrained in that the discharge temperature cannot be lower than 32°F. In addition, it was not readily apparent that dense gas dispersion models, such as DEGADIS, could be reliably applied in this situation given the low exhaust temperature.

In order to determine with a reasonable degree of assurance the likely impact of emissions from the carbon adsorption/chiller system, a decision was made to deal with the problem from an engineering point of view. In a design change, the carbon adsorption/chiller system exhaust is to be reheated to ambient temperature (68°F) and vented from a 75-foot stack. This will provide a neutrally buoyant plume capable of being modelled using conventional atmospheric dispersion approaches. The EPA-accepted model for simple terrain, PTPLU-2 was used to screen the impacts of the emissions from the carbon adsorber/chiller stack. Table L-7-4 presents the carbon adsorber/chiller stack physical and exhaust parameters used in the modeling. Because the modeling approach has been changed, Table L-7-5 has been deleted.

The emission rate used in the modeling is the estimated calculated emission rate of VOCs, which is 0.012 g/s. This value is derived as follows:

- Maximum concentration of volatile organics in the exhaust gas is estimated to be 100 ppm
- At 200 acfm flow rate, 100 ppm corresponds to an emission rate of 166 lbs/yr.
- At a chiller duty cycle of 1752 hours per year (20% of year), the emission rate becomes 0.012 g/s.

The results of the modeling are presented in Appendix 30 and predict a maximum impact of 4.02 $\mu g/m^3$ to occur at a distance of 196 meters from the stack. Since this impact, predicted by the very conservative screening model, is very low, more refined modeling was not deemed necessary. Modeling results are shown in Appendix L-30.

TABLE L-7-4

CARBON ADSORBER/CHILLER SYSTEM STACK PARAMETERS

Physical Height	75 feet	(22.86 meters)
Stack base elevation	139 feet	(42.38 meters)
Inside diameter	0.467 foot	(0.142 meters)
Exhaust Flow Rate, ACFM	200	(0.1 m^3/s)
Exhaust Temperature	68°F	293°K

~~TABLE L-7-5~~

~~MAXIMUM PREDICTED CARBON ADSORPTION/CHILLER STACK EMISSION FOR VOLATILE ORGANIC COMPOUNDS~~[28]

~~Pollutant~~	~~Maximum Impact~~[29] ~~($\mu g/m^3$)~~	~~Distance (meters)~~
~~Acetone~~	~~3,200~~	~~100~~
~~Methylene chloride~~	~~8,885~~	~~100~~

---

[28] ~~Volatile organic compound emission calculations are based on an assumed waste containing acetone and methylene chloride, two of the most volatile components expected to be received at FFPI. The waste characteristics used for these computations are described in the addendum to Appendix L-5 the air permit application for organic liquid storage tanks.~~

[29] ~~The concentration is averaged over a 1-hour period.~~

L.7.2.4 Fugitive Particulate and Organic Compound Emissions

A screening calculation was performed to estimate the effects of fugitive particulate and organic compound emissions. The analysis employed Turner's equation given in the EPA document Workbook of Atmospheric Dispersion Estimates, January, 1974. In Turner's equation the entire FFP-LP facility was treated as an area source. It was assumed that the sources of the fugitive emissions were distributed uniformly throughout the proposed FFP-LP facility. Ground level concentrations were estimated for various receptors located within a range of 200 to 1,500 meters from the FFP-LP facility. A maximum concentration of 25.1 $\mu g/m^3$ is predicted to occur for a 1 g/s emission of each air contaminant from this area source. This concentration is predicted to occur at a point 600 meters away from the FFP-LP facility. Table L-7-6 presents the maximum impacts of the fugitive particulate and volatile organic compound emissions from the entire facility for the originally estimated VOC emission rate of 0.366 g/s. Appendix L-31 contains the methodology, inputs, and results of the calculations using this method. Rigorous modeling was performed using the ISC-ST model as discussed in Section L.7.3.4 using revised emission parameters.

L.7.2.5 Steam Boiler Stack Emissions

Topographic maps of the area indicate that there are no terrain features having elevations above the incinerator stack. Therefore, the EPA-accepted model for simple terrain, PTPLU-2, was used for screening purposes. Based on the land use patterns and the existing population within a 3 kilometer radius of the proposed source for determining land use purposes, "rural" dispersion coefficients were used for all steps of the modelling analysis. Table L-7-6a presents the steam boiler stack physical characteristics and exhaust parameters used in the modelling. Steam boiler emission rates are provided in Appendix L-14 based on generic EPA emission rates for steam boilers published in "Compilation of Air Pollutant Emission Factors", AP-42, Fourth Edition, September 1985.

PTPLU-2 predicts the maximum short-term (1-hour) concentrations for several wind speeds ranging from 0.5 meters per second to 20 meters per second, for each of the six classes of atmospheric stability and reports the results separately for each atmospheric stability class. The highest concentration for any combination of wind speed and stability class is predicted to be 89.20 $\mu g/m^3$ for 1 g/s emission rate and occurs at a distance of 281 meters from the stack. Appendix L-50 contains the PTPLU-2 run which produced this result.

The maximum predicted impacts from steam boiler emissions for criteria pollutants, SO_3 and VOCs were calculated from the emission rates presented in Appendix L-14 and the modeled impacts for the 1 g/s emission rate calculated above. Results are presented in Table L-7-6b. Since the impacts predicted by the very conservative screening model are very low, more refined modeling was not deemed necessary.

L.7.3 Refined Modeling Methodology

L.7.3.1 Incinerator Stack Emissions

For receptors located in simple terrain, the EPA Industrial Source Complex (ISC) model can be applied to predict pollutant concentrations due to emissions from the incinerator stack. The ISCST (short term) version was used since one run can provide the various short term as well as the long term impacts such as 3-month and annual concentrations by exercising the 'N' day option. A polar receptor grid containing 360 receptors was chosen by placing 10 polar rings spaced 10 degrees apart. The results of the PTPLU-2 model were used to define the receptor locations (EPA, 1981) for the refined analysis using the ISC model. The radius of the first polar ring was 568 meters.

TABLE L-7-6

MAXIMUM PREDICTED IMPACTS OF THE FUGITIVE EMISSIONS OF PARTICULATES AND VOLATILE ORGANIC COMPOUNDS FROM THE FFP-LP FACILITY

Pollutant	Maximum Impact[30] ($\mu g/m^3$)	Distance (meters)
Particulates		
PM-10	0.0393	600
Total suspended particulates	0.0804	600
Volatile organic compounds	9.19	600

---

[30] The concentration is averaged over a 1-hour period.

This table represents a new
addition to the permit application

TABLE L-7-6a

STEAM BOILER STACK PARAMETERS

PTPLU2 MODEL

Physical Height	100 feet	(30.49 meters)
Stack base elevation	139 feet	(42.38 meters)
Inside diameter	1.3 feet	(0.396 meters)
Exhaust Flow Rate	2,200 acfm	(1.04 m^3/s)
Exhaust Temperature	175°F	(352.6 K)

This table represents a new addition to the permit application

TABLE L-7-6b

STEAM BOILER STACK EMISSION IMPACTS

PTPLU2 MODEL

		AMBIENT AIR QUALITY STANDARDS		
Pollutant	Max. Impact[1] (μg/m^3)	Averaging Period	NAAQS[2] (μg/m^3)	FLAAQS (μg/m^3)
SO_2	23.46	3-hour	1,300	1,300
		24-hour	365 (260)	260
		Annual	80 (60)	60
PM-10	0.95	24-hour	260 (150)	150
		Annual	75 (60)	60
NO_x	9.44	Annual	100	100
CO	2.36	1-hour	40,000	40,000
		8-hour	10,000	10,000
SO_3	0.33	N/A	N/A	N/A
VOC	0.26	N/A	N/A	N/A

---

[1] Maximum impact occurs at 281 meters from the source.

[2] National Ambient Air Quality Standards (numbers in parentheses are secondary standards)

The radii of the next eight rings were determined by multiplying the radius of the first ring by 1.3, 1.7, 2.3, 3.0, 3.9, 5.2, 6.8, and 9.0. The radius of the last polar ring was 6,000 meters. Actual meteorological data recorded separately for the five years ~~period~~ 1982 through 1986 at Tampa National Weather Service Station were used for this analysis. The incinerator stack parameters used in the analysis are as shown in Table L-7-1.

The ISC model was run separately for each year using the actual meteorological data. Of the five sets of the results, the highest values were chosen for comparison with the standards irrespective of which year's meteorological data gave those results. For example, the 1986 meteorological data gave the highest annual and 8-hour averages, and the 1982 data gave the highest 1-hour and 24-hour averages. Therefore, for the purposes of this analysis, the annual and 8-hour averages predicted using 1986 data were chosen and the 1-hour and 24-hour averages obtained by using 1982 data were used. This provides the highest degree of conservatism and is consistent with the EPA's overall intent of air quality modeling. Appendices L-32 through L-36 contain copies of the ISC runs that produced these results. Appendix L-37 contains a copy of the ISC run that produced the highest 90-day average concentration.

In addition to modeling normal operating conditions, the incinerator stack emissions have been modeled using the INPUFF model for a baghouse bypass event. The scenario for this event involves an excessive exit temperature, causing a bypass of the baghouse to avoid burn-up of the filters and the ensuing extreme particulate emissions. The stack parameters used for the modeling appear in Table L-7-6c. Simultaneous with the bypass, the liquid, solid and sludge waste feeds are immediately cutoff. Thus, the only emissions are those due to the partially combusted solids still in the kiln. The total emissions for this scenario are presented in Table L-7-6d. The predicted emissions occur over a 10 minute period. The INPUFF model was run with two large puffs occurring in the first 2 minutes with exponentially decreasing puff release rate over the last 8 minutes. The standard INPUFF model assumption of a constant 3 m/s wind blowing in one direction for 30 minutes at 68° is employed. Appendix L-39 presents the results of the INPUFF modeling of the baghouse bypass event.

L.7.3.2 Inorganic Waste Treatment System Stack Emissions

The screening analysis for the impacts of the emissions from the inorganic waste treatment stack indicates that the maximum predicted concentrations of the criteria pollutants and HCl are within the applicable ambient air quality standards and other health based reference air concentrations. Nonetheless, refined modeling analysis was performed.

For receptors located in simple terrain, the EPA Industrial Source Complex (ISC) model can be applied to predict pollutant concentrations due to emissions from the inorganic waste treatment (IWT) stack. The ISC-ST (short term version) was used since one run can provide the various short term as well as the long term impacts such as annual concentrations by exercising the 'N' day option. A polar receptor grid containing 360 receptors was chosen by placing 10 polar rings spaced 10 degrees apart. The results of the PTPLU-2 model were used to define the receptor locations for the refined analysis using the ISC model. The radius of the first polar ring was 313 meters. The radii of the next eight rings were determined by multiplying the radius of the first ring by 1.3, 1.7, 2.3, 3.0, 3.9, 5.2, 6.8, and 9.0. The radius of the last polar ring was 6,000 meters. Actual meteorological data recorded separately for the five years, 1982 through 1986, at Tampa National Weather Service Station were used for this analysis. The IWT stack parameters are shown in Table L-7-2.

The ISC model was run separately for each year using the actual meteorological data. Furthermore, because the inorganic waste treatment plant employs two different exhaust gas flow rates (6,000 acfm and 1,000 acfm for periods of normal operation and passive storage respectively), model runs were also made for each of the two exhaust rates. Of the five sets of the results for each of the two exhaust rates, the highest values were chosen for comparison with the standards irrespective of which year's meteorological data gave those results. For example, for both the 6,000 acfm and the 1,000 acfm exhaust rate cases, the 1986 meteorological data gave the highest annual average, the 1984 data provided the highest 8-hour average, and the 1982 data gave the highest 1-hour and 24-hour averages. Therefore, for the purposes of this analysis, the annual average predicted using 1986 data, the 8-hour average derived from 1984 data, and the 1-hour and 24-hour averages obtained by using 1982 data were used. This provides the highest degree of conservatism and is consistent with the EPA's overall intent of air quality modeling. Appendices L-40 through L-42 contain copies of the ISC runs that produced these results.

Upset conditions in the inorganic waste treatment plant were also modeled using both the INPUFF and the ISCST models. The standard INPUFF model assumption of a 3m/s wind blowing in one direction for 30 minutes at 68°F was employed. Inorganic waste treatment system stack parameters were presented earlier in Table L-7-2. Stack emissions from the IWT plant under upset conditions are depicted in Table L-7-6e. The INPUff model was used to determine 3-minute averaging period concentrations as well as the 1-hour averaging period concentrations for HCl and HF as a way of comparing results to the prediction of the 1-hour averaging period concentration for those two compounds using the ISC-ST model. The ISCST model runs for performed for a one-hour averaging period assuming 30 minutes at upset conditions followed by30 minutes at normal operating conditions. Results of the INPUFF and ISC-ST model runs for upset conditions in the inorganic waste treatment system are presented in Appendices L-32 through 37 (ISC-ST) and Appendices L-43 through L-46 (INPUFF).

This table represents a new
addition to the permit application

TABLE L-7-6c

INPUFF MODEL INCINERATOR STACK PARAMETER ASSUMPTIONS

Exhaust Gas Rate	37,240 acfm = 1,567.5 ft/min = 7.95 m/s
Exhaust Gas Temperature	400°F (477°K)
Stack Height	200 feet (60.97 meters)
Stack Diameter	5.5 feet (1.678 meters)
Stack Elevation	139 feet (42.38 meters)
Exit Velocity	1,565 feet/min
Event Duration	10 minutes (time required for all waste in kiln to be combusted)

This table represents a new
addition to the permit application

TABLE L-7-6d

INCINERATOR DISPERSION MODELING ANALYSES EMISSIONS RATES FOR FABRIC FILTER BYPASS EVENT[1]

Stack Gas Composition

Constituent	Lbs/Hr	Dry Vol. %
Nitrogen	74,187	79.47
Oxygen	20,262	18.99
Water	3,041	---
Carbon Dioxide	2,255	1.54

Other Combustion Gas Constituents

Constituent	Emission Rate
Particulate:	294 lb/hr
Carbon Monoxide:	2 lb/hr
Nitrogen Oxide:	4 lb/hr
Sulfur Dioxide:	18 lb/hr
Hydrogen Chloride:	200 lb/hr
Total Hydrocarbons:	0.3 lb/hr
Antimony:	8.33 lb/hr
Arsenic:	0.31 lb/hr
Barium:	8.32 lb/hr
Beryllium:	0.055 lb/hr
Cadmium:	0.55 lb/hr
Chromium:	0.83 lb/hr
Lead:	3.9 lb/hr
Mercury:	1.38 lb/hr
Silver:	8.28 lb/hr
Thallium:	2.76 lb/hr
Sulfuric acid mist:	1 lb/hr
Total Fluoride:	20 lb/hr

---

[1] The above emission were derived from the maximum controlled emissions in Table L-5-1, assuming that the flow from the SCC will be approximately 1/6th of the normal flowrate of 100,000 acfm at 1800°F and no removal efficiency. The above emission are instantaneous peak rates pertaining to less than the first two minutes after initiation of the bypass event. The emission rates will drop exponentially and be negligible after 10 minutes.

This table represents a new
addition to the permit application

TABLE L-7-6e
INORGANIC WASTE TREATMENT (IWT) PLANT
STACK EMISSIONS UNDER UPSET CONDITIONS

Component	Vent Gas Concentration (% by volume)	
	Before Scrubbing	After Scrubbing
Hydrogen Cyanide (1)	6	0.06
Hydrogen Fluoride (3)	0.1	0.001
Hydrogen Cloride (3)	1.2	0.012
Nitric Oxide (2)	---	---
Nitrogen Dioxide (2)	3.0	0.3
Hydrogen Sulfide (4)	Not detectable	Not detectable
Lead	Not detectable	Not detectable
Mercury	Not detectable	Not detectable
Asbestos	Not detectable	Not detectable
Beryllium	Not detectable	Not detectable

(1) Based on amount of HCN in one reaction batch, being released within 1 minute.

(2) Based on amount of reducing agent present in one reaction batch, being oxidized by HNO_3, and the resulting NO_2 being released within 5 minutes.

(3) Based on equilibrium vapor pressure. Maximum duration of 30 minutes assumed.

(4) H_2S not present in waste, but granular Na_2S may occasionally have to be used as reagent in small quantities to precipitate heavy metal in cases where complex formation prevents sufficient precipitation using lime.

L.7.3.3 Carbon Adsorption/Chiller System Stack Emissions

As explained earlier, use of the conservative screening model PTPLU-2 indicates very low impacts for VOC emissions from the carbon adsorber/chiller stack. Therefore, refined modeling was not performed for this source.

L.7.3.4 Fugitive Particulate and Organic Compound Emissions

Emissions of fugitive and organic compounds were modeled using the ISC-ST model. Hourly data for years 1982 through 1986 from the Tampa meteorological station at Tampa International Airport were used. Total fugitive particulate and organic vapor emissions from the facility were modeled as 10 separate sources, distributed evenly throughout the process areas, each with the same emission rate. The "stack" parameters input into the model were as follows:

• Exhaust gas velocity:	19.7 ft/min (0.10 m/s)
• Exhaust gas temperature:	70°F (294.26 K)
• Stack height:	9.8 feet (3.0 meters)
• Stack diameter:	0.033 feet (0.01 meters)
• Stack elevation:	139 feet (42.38 meters).

The original model runs were completed at the total facility fugitive emission rate of 0.365 g/s. A refinement of the methodology to calculate the emission rate in a manner that reflects the fact that it is a new facility (use of non-leaking emission factors), leads to an emission rate of 0.1198 g/s for <u>fugitive organics</u>. The actual calculated emission rate for <u>fugitive particulates</u> from the facility is 0.00156 g/s.

The ISC model was run separately for each year using the actual meteorological data. Of the five sets of the results, the highest values were chosen for comparison with the standards irrespective of which year's meteorological data gave those results. For example, the 1986 meteorological data gave the highest annual average, and the 1982 data gave the highest 1-

hour average, while the 1984 data provided the highest 8-hour and 24-hour averages. Therefore, for the purposes of this analysis, the annual average predicted using 1986 data was chosen; the 1-hour average obtained by using 1982 data was used; and the 8-hour and 24-hour averages predicted using the 1984 data were selected. This provides the highest degree of conservatism and is consistent with the EPA's overall intent of air quality modeling. Appendices L-47 through L-49 contain copies of the ISC runs that produced these results.

L.7.4 Air Quality Modeling Analysis Results

L.7.4.1 Results of Air Quality Modeling Analysis of Incinerator Stack Emissions

The results of the refined modeling analysis for criteria and non-criteria pollutants described above are given in Table L-7-7 for normal incinerator operation. It is clear that the proposed incinerator will comply with both the National Ambient Air Quality Standards (NAAQS) and the Florida Ambient Air Quality Standards (FLAAQS). Results of the refined modeling analysis for metals are shown in Table L-7-8. Modeling results for metals and hydrogen chloride are discussed in Section L-8.0

Stack emission impacts under baghouse bypass conditions are shown in Table L-7-9 in which 3-minute and 10-minute averages for nine pollutants are calculated using the INPUFF model. Metals emission impacts for a baghouse bypass event are depicted in Table L-7-10 in which 3-minute and 10-minute averages are similarly calculated. Comparison with air quality standards is made difficult by the short averaging times involved; no ambient air quality standards have been promulgated for these compounds for the averaging times calculated here. However, the Reference Air Concentration (RAC) of HCl (150 $\mu g/m^3$ averaged over 3 minutes) has been proposed as a health-based standard by U.S.EPA in the Draft Guidance on Metals and Hydrogen Chloride Controls for

Hazardous Waste Incinerators, March 1989. Thus the proposed short-term standard for HCl would be exceeded for a short interval of time (less than one-half hour) during an extremely unlikely baghouse bypass event. As noted elsewhere in the application, the incinerator has been designed so that the bypass around the fabric filter baghouse is not used during the primary emergency shutdown event. In such a shutdown event, ambient air is introduced to cool the hot flue gases to a temperature that the baghouse can withstand. It is conceivable, although very unlikely, that this emergency provision could fail too, and cause the baghouse to be exposed to excessive temperatures which would damage the filter bags. In that event alone will the baghouse bypass be opened.

L.7.4.2 Results of Air Quality Modeling Analysis of Inorganic Waste Treatment System Stack Emissions

Refined modeling analysis was ~~not~~ performed for the inorganic waste treatment system stack emissions even though the screening analysis indicated (Table L-7-3) that the impacts of the emissions from the inorganic waste treatment

The information in this
table has been replaced

TABLE L-7-7

MAXIMUM PREDICTED INCINERATOR STACK EMISSION IMPACTS UNDER NORMAL OPERATING CONDITIONS FOR CRITERIA AND NON CRITERIA POLLUTANTS[1]

ISC - ST MODEL

Pollutant	Averaging Period	Max. Impact ($\mu g/m^3$)	Distance from Stack (m)	NAAQS[2] ($\mu g/m^3$)	FLAAQS ($\mu g/m^3$)
SO_2	3-hour	12.90	568	1,300	1,300
	24-hour	3.33	1,306	365 (260)	260
	Annual	0.345	966	80 (60)	60
PM-10	24-hour	0.22	1,306	260 (150)	150
	Annual	0.022	966	75 (60)	60
NO_x	Annual	0.317	966	100	100
CO	1-hour	6.56	568	40,000	40,000
	8-hour	2.38	966	10,000	10,000
H_2S	1-hour	0.007	568	N/A	N/A
HCl	1-hour	6.26	568	N/A[3]	N/A[3]
SO_4	1-hour	1.18	568	N/A	N/A
HF	1-hour	0.61	568	N/A	N/A
VOC	1-hour	0.87	568	N/A	N/A
Vinyl Chloride	1-hour	0.009	568	N/A	N/A
Pb	1-hour	0.47	568	1.5[4]	1.5[4]

---

[1] All impacts are at ground-level, with the ground level where the stack is located as the reference.

[2] National Ambient Air Quality Standards (numbers in parentheses are secondary standards)

[3] There are no applicable ambient air quality standards for HCl. The reference air concentration (RAC) of HCl, which is a health-based standard proposed by EPA in the <u>Draft Guidance on Metals and Hydrogen Chloride Controls for Hazardous Waste Incinerators, March 1989</u>, is 150 $\mu g/m^3$ averaged over 3 minutes.

[4] The NAAQS and FLAAQS for lead are for a 3-month average.

This table represents a new
addition to the permit application

TABLE L-7-8

PREDICTED INCINERATOR STACK EMISSION IMPACTS FOR METALS UNDER NORMAL OPERATING CONDITIONS

ISC - ST MODEL

Pollutant	Total Emission (ton/yr)	MAXIMUM IMPACT 1-hour Average[1] ($\mu g/m^3$)	 Annual Average[2] ($\mu g/m^3$)
Antimony	10.5	1.305	0.0190
Arsenic	0.394	0.094	0.0007
Barium	2.10	0.261	0.0038
Beryllium	0.0038	4.81×10^{-4}	7.01×10^{-6}
Cadmium	0.696	0.087	0.0013
Chromium	0.209	0.026	3.74×10^{-4}
Lead	3.79	0.472	0.0069
Mercury	1.23	0.154	0.0022
Silver	2.09	0.260	0.0038
Thallium	3.48	0.433	0.0063

[1] Maximum impact occurs at 568 m from the source.

[2] Maximum impact occurs at 966 m from the source.

This table represents a new
addition to the permit application

TABLE L-7-9

MAXIMUM PREDICTED INCINERATOR STACK EMISSION IMPACTS UNDER BYPASS CONDITIONS

INPUFF MODEL

Pollutant	Total Pounds Emitted	MAXIMUM IMPACT 3-min Average[1] ($\mu g/m^3$)	MAXIMUM IMPACT 10-min Average[2] ($\mu g/m^3$)
HCl	200	655.0	253.0
SO_2	18	59.0	22.8
NO_x	4	13.1	5.1
CO	2	6.6	2.5
VOC	0.3	1.0	0.4
PM	294	962.9	371.9
SO_4 Mist	1	3.3	1.3
Total F	20	65.5	25.3
Pb	3.9	12.8	4.9

---

[1] Maximum impact occurs at 3.2 km from the source.

[2] Maximum impact occurs at 3.1 km from the source.

This table represents a new
addition to the permit application

TABLE L-7-10

MAXIMUM PREDICTED INCINERATOR STACK EMISSION IMPACTS FOR METALS UNDER BYPASS CONDITIONS

INPUFF MODEL

Pollutant	Total Pounds Emitted	MAXIMUM IMPACT 3-min Average[1] ($\mu g/m^3$)	MAXIMUM IMPACT 10-min Average[2] ($\mu g/m^3$)
Antimony	8.33	27.3	10.5
Arsenic	0.31	1.0	0.4
Barium	8.32	27.2	10.5
Beryllium	0.055	0.2	0.1
Cadmuim	0.55	1.8	0.7
Chromium	0.83	2.7	1.0
Lead	3.9	12.8	4.9
Mercury	1.38	4.5	1.7
Silver	8.28	27.1	10.5
Thallium	2.76	9.0	3.5

[1] Maximum impact occurs at 3.2 km from the source.

[2] Maximum impact occurs at 3.1 km from the source.

This table represents a new
addition to the permit application

TABLE L-7-11

INORGANIC WASTE TREATMENT SYSTEM STACK EMISSION IMPACTS UNDER NORMAL OPERATING CONDITIONS AT HIGH EXHAUST FLOW

ISC-ST MODEL

Pollutant	Averaging Period	Max. Impact ($\mu g/m^3$)	Distance from Stack (m)	NAAQS ($\mu g/m^3$)	FLAAQS ($\mu g/m^3$)
NO_x	365-day	0.00548	313	100	100
	1-hour	0.301	720	N/A	N/A
HF	1-hour	0.00523	720	N/A	N/A
HCN	1-hour	Not detectable		N/A	N/A
HCl	1-hour	0.0119[1]	720	N/A	N/A

---

[1] There are no applicable ambient air quality standards for HCl. The reference air concentration (RAC) of HCl, which is a health-based standard proposed by EPA in the <u>Draft Guidance on Metals and Hydrogen Chloride Controls for Hazardous Waste Incinerators, March 1989</u>, is 150 $\mu g/m^3$ averaged over 3 minutes.

This table represents a new
addition to the permit application

TABLE L-7-12

INORGANIC WASTE TREATMENT SYSTEM STACK EMISSION IMPACTS UNDER NORMAL OPERATING CONDITIONS AT LOW EXHAUST FLOW

ISC-ST MODEL

Pollutant	Averaging Period	Max. Impact ($\mu g/m^3$)	Distance from Stack (m)	NAAQS ($\mu g/m^3$)	FLAAQS ($\mu g/m^3$)
NO_x	365-day	0.000129	241	100	100
	1-hour	0.00728	315	N/A	N/A
HCl	1-hour	0.000289[1]	315	N/A	N/A
HCN	1-hour	Not detectable		N/A	N/A
HF	1-hour	0.000127	315	N/A	N/A

---

[1] There are no applicable ambient air quality standards for HCl. The reference air concentration (RAC) of HCl, which is a health-based standard proposed by EPA in the Draft Guidance on Metals and Hydrogen Chloride Controls for Hazardous Waste Incinerators, March 1989, is 150 $\mu g/m^3$ averaged over 3 minutes.

This table represents a new
addition to the permit application

TABLE L-7-13

INORGANIC WASTE TREATMENT SYSTEM STACK EMISSION IMPACTS UNDER UPSET CONDITIONS

INPUFF AND ISC-ST MODELS

Pollutant	Averaging Period	Model Used	Maximum Impact ($\mu g/m^3$)	Distance from Stack (m)	NAAQS ($\mu g/m^3$)	FLAAQS ($\mu g/m^3$)
NO_x	3-minute	INPUFF	33.0	750	100[1]	100[1]
HCN	3-minute	INPUFF	0.952	750	N/A	N/A
HF	3-minute	INPUFF	0.282	700	N/A	N/A
	1-hour	INPUFF	0.160	650	N/A	N/A
	1-hour	ISCST[2]	0.342[2]	720	N/A	N/A
HCl	3-minute	INPUFF	6.32	700	N/A	N/A
	1-hour	INPUFF	3.59	650	N/A	N/A
	1-hour	ISCST[2]	7.41[2]	720	N/A	N/A

[1] Annual average.

[2] Not directly modeled. Calculated from average (30 minutes duration each) of upset and normal emission rates.

This table represents a new
addition to the permit application

TABLE L-7-14

AIR QUALITY IMPACTS OF POINT AND FUGITIVE ORGANIC EMISSIONS SOURCES AT PROPOSED FFP-LP FACILITY

Item #	Source(s)	Maximum Air Quality Impact (1-hr average)	Location of Maximum Impact	Percent of Total Impact	Organic Emissions (tons/yr)
1	Hazardous Waste Incinerator	0.87 ug/m^3	568 meters	0.4%	6.97
2	Inorganic Waste Treatment System, Reagent Storage Area	0.92 ug/m^3	313 meters	0.4%	0.42
3-6	Carbon Adsorbers, Chiller	4.0 ug/m^3	196 meters	1.9%	0.725
14	Steam Boiler	0.26 ug/m^3	281 meters	0.1%	0.106
ff	Fugitive Emissions	206.6 ug/m^3	200 meters	97.1%	4.17
	Total Source Impact (1-hour average)	212.7 ug/m^3		100.0%	11.89 tpy

This table represents a new
addition to the permit application

TABLE L-7-15

AIR DISPERSION MODELING ANALYSES FOR FUGITIVE ORGANIC VAPOR EMISSIONS

ISC-ST MODEL

Modeling Time Period	Maximum Value (ug/m^3)	Distance from source	Year of Met. Data
365-Days	9.151	100 m	1986
24-Hours	41.36	100 m	1984
8-Hour	74.85	200 m	1984
3-Hour	123.0	200 m	1984
1-Hour	206.6	200 m	1982

This table represents a new
addition to the permit application

TABLE L-7-16

AIR DISPERSION MODELING ANALYSES FOR FUGITIVE PARTICULATE EMISSIONS

ISC-ST MODEL

Modeling Time Period	Maximum Value (ug/m^3)	Distance from source	Year of Met. Data
365-Days	0.119	100 m	1986
24-Hours	0.539	100 m	1984
8-Hour	0.975	200 m	1984
3-Hour	1.60	200 m	1984
1-Hour	2.69	200 m	1982

system stack will be significantly below the applicable EPA and Florida state standards and guidelines. Maximum air quality impacts predicted for nitrogen oxides, hydrogen fluoride, hydrogen cyanide and hydrogen chloride using the ISC-ST model for normal operating conditions for the high (6,000 acfm) and the low (1,000 acfm) exhaust flow rates are summarized in Tables L-7-11 and L-7-12, respectively. As is evident from the tables, impacts associated with normal operation are predicted to be extremely low.

Air quality impacts occurring under upset conditions in the inorganic waste treatment system were predicted using both the INPUFF and the ISC-ST models. INPUFF alone was employed to determine the 3-minute averaging period concentrations while both INPUFF and ISC-ST were used to predict the 1-hour averaging period concentrations for comparison purposes. Maximum predicted concentrations for NO_x, HCN, HF and HCl were calculated for both the 3-minute and the 1-hour averaging periods; results are given in Table L-7-13.

While comparison with National Ambient Air Quality Standards (NAAQS) is not that meaningful due to the general lack of standards relating to short-term averaging periods, useful points of reference may be found in standards and recommended levels published by OSHA and the American Conference of Governmental Industrial Hygienists (ACGIH). The predicted 3-minute average nitrogen oxide concentration of 33 $\mu g/m^3$ (measured as nitrogen dioxide, the limiting compound) is not only less than the annual NO_x standard of 100 $\mu g/m^3$, it is also less than the ACGIH's Threshold Limit Value (TLV) of 6 mg/m^3, time-weighted average, and the Short-Term Exposure Limit (STEL) of 10 mg/m^3; predicted concentrations are also less than OSHA's ceiling of 9 mg/m^3.

Predicted concentrations of hydrogen cyanide (0.952 $\mu g/m^3$, 3-minute average) are well below both the ACGIH ceiling of 10 mg/m^3, time-weighted average, and the OSHA standard of 11 mg/m^3 for dermal exposure.

Predicted concentrations of hydrogen fluoride for both the 3-minute and the 1-hour averaging periods (0.282 µg/m^3 and 0.160 µg/m^3 respectively) are well below both the ACGIH recommended ceiling of 2.5 mg/m^3 and the OSHA standard of 3 ppm, time-weighted average.

Predicted concentrations of hydrogen chloride (6.32 µg/m^3 and 3.59 µg/m^3 for the 3-minute and 1-hour averaging periods, respectively) are well below the 150 µg/m^3 draft short-term standard proposed by U.S.EPA in the Draft Guidance on Metals And Hydrogen Chloride Controls for Hazardous Waste Incinerators, March 1989.

L.7.4.3 Results of Air Quality Modeling Analysis of Carbon Adsorption/ Chiller System Stack Emissions

Emissions from the carbon adsorber/chiller system consist only of hydrocarbons, assumed here totally to be VOCs. Resulting ambient air concentrations are calculated by the PTPLU-2 model to be 4.0 $\mu g/m^3$, 1-hour average. The model computed this concentration to occur at a distance of 196 meters downwind from the chiller's 75-foot stack. This represents about 2% of total VOC emissions from the entire facility. Table L-7-14 depicts the relative contribution of the various organic emission sources facility-wide.

L.7.4.4 Results of Air Quality Modeling Analysis of Fugitive Particulate and Organic Compound Emissions

~~Screening analysis using the Turner's equation indicated that the impacts (Table L-7-6) of the fugitive particulate and volatile organic compounds emitted facility-wide would be low. Nonetheless, further refined analysis was not performed.~~ Results of the ISC-ST model runs for fugitive organic vapor emissions and fugitive particulate emissions are presented in Tables L-7-15 and L-7-16 respectively. While impacts associated with the very low concentration (2.69$\mu g/m^3$) of fugitive particulate emissions are negligible, concern has been expressed over the composition of the fugitive VOCs relative to Florida's intent to develop and promulgate air toxic guidelines for specific chemical compounds. The FDER has developed a draft list of approximately 650 chemicals under consideration for regulation as air toxic compounds. FFP-LP has examined this list and analyzed the likelihood of fugitive organic vapor emissions from the facility exceeding the "No Threat Limits" for any of the 650 compounds.

FFP-LP examined the impact upon air quality resulting from the acceptance of each of the air toxic compounds at 100% of the plant's storage capacity for high-Btu organic liquids. Most of the organic compounds on the list of 650 air toxic chemicals were assumed to be stored in the high-Btu waste storage and feed tanks at 100% concentration. Fugitive emissions of VOCs from the high-Btu storage and feed tanks leaks and spills are calculated to be 3,324 pounds/year (1.66 tpy) (See Table L-7-17). Using the ISC-ST model, the maximum predicted concentrations of any air toxic compound is computed to be:

- 70.8 $\mu g/m^3$ as a 1-hour average,
- 25.6 $\mu g/m^3$ as an 8-hour average,
- 14.2 $\mu g/m^3$ as a 24-hour average,
- 3.1 $\mu g/m^3$ as an annual average.

Comparison of these concentrations to the "No Threat Limits" associated with the compounds on the draft air toxics list led to a shortened list of 61 chemicals any one of which if allowed to fill the plant's high-Btu waste storage and feed tanks in a 100% concentration would lead to an exceedance of a "No Threat Limit". However, the probability of filling all the storage and feed tanks with 100% concentration of any of these 61 chemicals is very low. The list of 61 air toxic chemicals for which an exceedance could occur in the absence of special operating controls is provided in Table L-7-17. Special operating procedures to be taken with respect to these 61 chemicals are described in the Waste Characterization and Waste Analysis Plan in Section C of the permit application.

TABLE L-7-17

SUMMARY OF FUGITIVE AIR TOXIC EMISSIONS FROM THE PROPOSED FACILITY

SOURCE #	PUMPS	VALVES	SAF/REL VALVES	OPEN-END LINES	SAMPL. CONNXNS	COMP-RESSORS	FLANGES	OTHER	WASTE TYPE	SOURCE DESCRIPTION	AVERAGE USAGE (hr/day)	ANNUAL EMISSION (lb)
1	1	6	0	0	1	0	10	2	H	From pump P-01 tank truck unloading to waste storage header	8	146.29
2	1	12	0	0	1	0	15	0	H	From pump P-02 tank truck unloading to waste storage header	8	214.77
3	1	37	0	0	1	0	39	2	H	From pump P-04 tank truck unloading / direct burn to kiln/SCC	0.02	1.49
4	1	15	0	0	1	0	21	2	H	From Pump P-06 to pumpable waste storage header	8	250.33
5	1	4	0	0	1	0	8	2	F	From pump P-05 to fuel oil storage tank	0	0.00
6	0	7	0	0	0	0	9	2	H	Direct burn recirculation line from Kiln/SCC to truck unloading	0.02	0.24
7	1	8	0	0	1	0	10	0	S	From sludge pump P-79 to pumpable waste storage header	0	0.00
8	1	6	0	0	1	0	11	2	H	From pump P-07 to drummed pumpable waste storage reciever (T-09)	8	146.67
9	1	7	0	0	1	0	12	0	H	From DPWSR (T-09) to pumpable waste storage feed header	8	158.15
10	0	2	0	0	0	0	2	0	H	From liquid waste feed header to receiving/holding tank (T-10)	8	22.95
11	0	2	0	0	0	0	2	0	H	From liquid waste feed header to receiving/holding tank (T-11)	8	22.95
12	0	2	0	0	0	0	2	0	H	From liquid waste feed header to receiving/holding tank (T-12)	8	22.95
13	0	2	0	0	0	0	2	0	H	From liquid waste feed header to receiving/holding tank (T-13)	8	22.95
14	0	2	0	0	0	0	2	0	H	From liquid waste feed header to receiving/holding tank (T-14)	8	22.95
15	0	2	0	0	0	0	2	0	H	From liquid waste feed header to receiving/holding tank (T-15)	8	22.95
16,17	0	3	0	0	1	0	2	0	H	From R/H tank (T-10), side or bottom draw, to emptying header	8	34.05
18,19	0	3	0	0	1	0	2	0	H	From R/H tank (T-11), side or bottom draw, to emptying header	8	34.05
20,21	0	3	0	0	1	0	2	0	H	From R/H tank (T-12), side or bottom draw, to emptying header	8	34.05
22,23	0	3	0	0	1	0	2	0	H	From R/H tank (T-13), side or bottom draw, to emptying header	8	34.05
24,25	0	3	0	0	1	0	2	0	H	From R/H tank (T-14), side or bottom draw, to emptying header	8	34.05
26,27	0	3	0	0	1	0	2	0	H	From R/H tank (T-15), side or bottom draw, to emptying header	8	34.05
28	1	7	0	0	1	0	6	1	H	From pumps P-09, P-10, or P-11 to pumpable waste storage header	8	155.87
29	1	12	0	0	1	0	14	2	S	From pump P-16 to kiln (sludge to kiln)	0	0.00
30	0	3	0	0	1	0	2	0	S	From sludge holding tank (T-16) to emptying header	0	0.00
31	0	2	0	0	0	0	3	0	S	From waste feed header to sludge feed tank (T-17)	0	0.00
32	0	2	0	0	0	0	3	0	S	From waste feed header to sludge holding tank (T-16)	0	0.00
33	0	3	0	0	1	0	2	0	S	From sludge feed tank (T-17) to emptying header	0	0.00
34	0	2	0	0	0	0	3	0	L	Pumpable waste storage feed header to Low-BTU liq feed tank (T-18)	0	0.00
35	0	2	0	0	0	0	3	0	H	Pumpable waste storage feed header to Hi-BTU liq feed tank (T-19)	8	23.33
36	0	2	0	0	0	0	3	0	H	Pumpable waste storage feed header to Hi-BTU liq feed tank (T-20)	8	23.33
37	1	26	0	0	1	0	30	4	L	Low-BTU liquid feed tank (T-18) side draw off to kiln/SCC	0	0.00
38	0	3	0	0	1	0	2	4	L	Low-BTU liq feed tank (T-18) bottom draw off to waste storage EH	0	0.00
39	1	18	0	0	1	0	23	4	H	Hi-BTU liquid feed tank (T-19 or T-20) side draw off to kiln/SCC	24	853.14
40	0	3	0	0	1	0	2	0	H	Hi-BTU liq feed tank (T-19) to waste storage EH	24	102.14
41	0	3	0	0	1	0	2	0	H	Hi-BTU liq feed tank (T-20) to waste storage EH	24	102.14
42	0	4	0	0	0	0	8	0	L	Low-BTU liq recirc. from kiln to Low-BTU liq feed tank (T-18)	0	0.00
43	0	4	0	0	0	0	10	0	H	Hi-BTU liq recirc. from kiln to Hi-BTU liq feed tank (T-19 or T-20	24	144.54
44	1	28	0	0	1	0	36	0	F	From fuel oil storage tank to kiln/SCC	0	0.00
45	1	3	0	0	1	0	12	0	L	Ash quench liquid to filter feed tanks	0	0.00
TOTALS	14	259	0	0	25	0	323	27				
NON-LEAKING EMISSION FACTORS (LB/HR): LIGHT LIQUIDS	0.026	0.0038	0.098	0.0033	0	0.2	0.00013	0				
NON-LEAKING EMISSION FACTORS (LB/HR): HEAVY LIQUIDS	0.03	0.00051	0.098	0.0033	0	0.2	0.00013	0				

LEAKS (lb/yr)	2,664
SPILLS (lb/yr)	660
TOTAL (lb/yr)	3,324
TOTAL (g/s)	0.0479
TOTAL (tpy)	1.66

MODELED IMPACTS (ug/m^3)

8-HR	25.6	ANNUAL	3.1
24-HR	14.2	1-HR	70.8

L.7.5 Impacts at Specific Receptors

The results of the dispersion analysis of the incinerator stack emissions indicate that the maximum impacts under normal operating conditions due to all air pollutants occur within a radius of 1.4 kilometers from the incinerator and this is the region of maximum impact. In addition, the maximum impacts due to various air pollutants emitted during normal operation are well within all applicable standards. Maximum impacts under the baghouse bypass scenario are predicted to occur at 3.2 km as 1.98 miles from the incinerator stack. Impacts are due to an excursion in hydrogen chloride concentrations estimated to last less than one-half hour. The USGS map (Appendix L-38) for this area indicates that there are no sensitive receptors (e.g., Class I areas) located within this region of maximum impact. Therefore, further analysis for impacts at sensitive receptors is not required.

L.8 RISK EVALUATION OF METALS AND HYDROGEN CHLORIDE EMISSIONS FROM THE INCINERATOR

The proposed amendments to the Subpart O, Part 264 hazardous waste incinerator rules allow EPA to regulate the emissions of hydrogen chloride and 10 specific metals more stringently in order to protect human health and the environment. The metals that are regulated are classified as carcinogens and noncarcinogens. The carcinogenic metals are arsenic, beryllium, cadmium, and chromium. The noncarcinogenic metals are antimony, barium, lead, mercury, silver, and thallium. The EPA <u>Draft Guidance on Metals and Hydrogen Chloride Controls for Hazardous Waste Incinerators, March, 1989</u> provides three approaches towards evaluating the impacts of the HCl and metal emissions reaching a hypothetical maximum exposed individual (MEI). The levels of these emissions reaching the MEI should not exceed ambient health-based levels. There are two types of health-based levels known as Risk-Specific Doses (RSDs) for carcinogens and Reference Air Concentrations (RACs) for noncarcinogens. EPA has proposed a tiered series of standards based entirely upon evaluations of health risk. The objective is to limit potential exposure of the most exposed individual to carcinogenic and noncarcinogenic metals and HCl to acceptable additional risks, namely:

- That exposure to all carcinogenic metals of concern be limited such that the sum of the excess risks attributable to ambient concentrations of these metals not exceed an additional lifetime individual risk to the potential most exposed individual (MEI) of 10^{-5}; and
- That exposure to each noncarcinogenic metal and HCl be limited such that exposure to the potential MEI does not exceed the reference air concentration (RAC). For lead, the RAC is 10% of the NAAQS. For HCl, the RAC is 100% of the inhalation reference dose (RfD). For the other noncarcinogenic metal, the RACs are 25% of the oral RfD converted, 1 to 1, to an inhalation RfD.

Compliance with proposed emission limitations for metals and HCl may be demonstrated by one of the three methods:

1. Tier I approach which would set limits on feed rates of metals as well as total chlorine in the waste fed into the incinerator.
2. Tier II approach which would specify limits on the emissions of the metals and HCl from the stack.
3. Tier III approach allows the applicant to demonstrate by site-specific dispersion modeling that emissions of metals and HCl will not result in exceedances of ambient levels that pose unacceptable health risks.

Since the Tier III approach provides site-specific results, this approach is used here to demonstrate that the additional cancer risk posed by the carcinogenic metals does not exceed 10^{-5}, and the ambient levels of noncarcinogenic metals and HCl do not exceed their RACs. Tier III analysis requires the use of site-specific dispersion modeling, and the modeling results discussed in Section 7.0 have been used in this analysis.

L.8.1 Tier III Analysis

An analysis was performed using the Tier III approach to demonstrate that the ambient levels of metals and HCl resulting from the incinerator stack emissions are well within the health-based ambient levels. As discussed in Section 5.0, metals emissions from the incinerator were calculated based on the incinerator design, the composition of wastes expected to be received at FFP-LP, and the EPA-assumed control efficiencies contained in the Draft Guidance Document. The results obtained from the dispersion analysis (presented in Section 7.0) have been used to demonstrate that the additional cancer risk posed by all carcinogenic metals is less than 10^{-5}, and that the ambient levels of noncarcinogenic metals and HCl do not exceed their RACs. Table L-8-1 presents the RACs of HCl and the noncarcinogenic metals. Table L-8-2

TABLE L-8-1

REFERENCE AIR CONCENTRATIONS FOR NON-CARCINOGENS

Constituent	RAC[1] ($\mu g/m^3$)
HCl	150 (3-min) 7 (annual)
Antimony	0.3
Barium	50
Lead	0.09
Mercury	0.3
Silver	3
Thallium	0.3

Source: EPA Document Draft Guidance on Metals and Hydrogen Chloride Controls for Hazardous Waste Incinerators, March, 1989.

---

[1] The RACs for the metals are 24-hour average concentrations since these are obtained by converting oral RfDs which are expressed on a "per day" basis, into inhalation thresholds.

TABLE L-8-2

UNIT RISK FACTORS FOR CARCINOGENIC METALS

Constituent	Unit Risk
Arsenic	4.3×10^{-3}
Beryllium	2.4×10^{-3}
Cadmium	1.8×10^{-3}
Chromium	1.2×10^{-2}

Source: EPA Document Draft Guidance on Metals and Hydrogen Chloride Controls for Hazardous Waste Incinerators, March, 1989.

presents the unit risk factors for the carcinogenic metals. Unit risk factors give the additional cancer risk due to being exposed to an ambient concentration of 1 $\mu g/m^3$ (of a carcinogen) continuously for 70 years, 24 hours a day.

The analysis for noncarcinogens consists of showing that the 24-hour average concentration of each metal at the location where the maximum concentration is predicted is well within the RAC for that metal. For HCl, there are two RACs based on two averaging times, 3-minutes, and annual.

For carcinogens, the analysis consists of demonstrating that the additional risk due to the four metals at the location where the maximum annual concentration is predicted is less than 10^{-5} using the following equation:

Equation 1 - $(DCxE_{As}xUR_{As})+(DCxE_{Cd}xUR_{Cd})+(DCxE_{Cr}xUR_{Cr})+(DCxE_{Be}xUR_{Be}) \leq 10^{-5}$

where: DC = maximum annual unit concentration $(\mu g/m^3)/(g/s)$

E_{AS} = Arsenic emission rate (g/s)
E_{Be} = Beryllium emission rate (g/s)
E_{Cd} = Cadmium emission rate (g/s)
E_{Cr} = Chromium emission rate (g/s)
UR_{As} = Arsenic unit risk factor
UR_{Be} = Beryllium unit risk factor
UR_{Cd} = Cadmium unit risk factor
UR_{Cr} = Chromium unit risk factor

Noncarcinogenic Metals

The first step consists of demonstrating that the maximum predicted ambient levels for the noncarcinogenic metals and HCl are well within the respective RACs. The atmospheric dispersion modeling results presented in Section 7.0 were used in conjunction with the emission rates presented in Section 5.0 (converted to grams per second) to demonstrate that the maximum predicted ambient levels are within the RACs for these substances. The highest 1-hour, 24-hour, and annual average concentrations predicted from the dispersion analysis (Section 7.3) were used in this analysis. Using the results of the dispersion modeling analysis as well as the emission rates presented in Tables L-5-2 and L-5-3, the maximum 24-hour average concentrations of the six noncarcinogens, and the maximum 1-hour and annual average concentrations of HCl were calculated. The 3-min average for HCl was estimated by multiplying the 1-hour average concentration by 1.64 as recommended in the EPA Draft Guidance on Metals and Hydrogen Chloride Controls for Hazardous Waste Incinerators, March, 1989. These results are presented in Table L-8-3.

These results indicate that the maximum predicted ambient level of each of the noncarcinogenic metals and HCl is well within the respective RAC.

Carcinogenic Metals

The additional cancer risk due to all four metals was estimated using the maximum predicted annual ambient concentrations obtained from the dispersion analysis and the emission rates of the metals presented in Section 5.0 using Equation 1. The maximum annual ambient concentration was predicted to be 0.06050 $\mu g/m^3$ for a 1 g/s emission rate based on ~~a full~~ 8,400 hours/yr of incinerator operation. Substituting this result for DC in Equation 1 along with the emission rates of the four carcinogenic metals and their unit risk factors, the additional cancer risk from all metals was estimated to be 9.98×10^{-6}. These results are presented in Table L-8-4.

This result indicates that the additional cancer risk due to all the four metals is within the 10^{-5} value suggested by the EPA Draft Guidance Document.

TABLE L-8-3

MAXIMUM PREDICTED AMBIENT LEVELS OF NONCARCINOGENIC METALS AND HYDROGEN CHLORIDE

Constituent	Maximum Ambient Concentration ($\mu g/m^3$)	Distance (km)	Direction (deg)	RAC ($\mu g/m^3$)
HCl				
3-min	10.285	0.568	90	150
annual	0.0915	0.966	90	7
Antimony	0.0190	1.306	360	0.3
Barium	0.0038	1.306	360	50
Lead	0.0069	1.306	360	0.09
Mercury	0.0022	1.306	360	0.3
Silver	0.0038	1.306	360	3
Thallium	0.0063	1.306	360	0.3

TABLE L-8-4

MAXIMUM PREDICTED AMBIENT LEVELS OF CARCINOGENIC METALS

Metal	Emission Rate (g/s)	Unit Risk Factor ($\mu g/m^3/g/s$)	Maximum Ambient Concentration ($\mu g/m^3$)	Distance (km)	Direction (deg)	Incremental Cancer Risk
Arsenic	0.0118	4.3×10^{-3}	0.000714	0.966	90	3.08×10^{-6}
Beryllium	0.000116	2.4×10^{-3}	7.01×10^{-6}	0.966	90	1.67×10^{-8}
Cadmium	0.02096	1.8×10^{-3}	0.001268	0.966	90	2.282×10^{-6}
Chromium	0.00629	1.2×10^{-2}	0.00038	0.966	90	4.55×10^{-6}
Total						9.93×10^{-6}

L.8.2 Conclusion

In conclusion Tier III analysis shows that the calculated cancer risks due to the carcinogenic metals are less than the 1 x 10^{-5} level the EPA Draft Guidance Document indicates as acceptable. For noncarcinogenic metals and HCl, the actual ambient levels are less than the allowable reference air concentrations. The proposed incinerator therefore can be expected to operate safely without causing any adverse risks to the surrounding population.