ORLANDO UTILITIES COMMISSION
"The Reliable Utility"

Curtis H. Stanton Energy Center Unit II

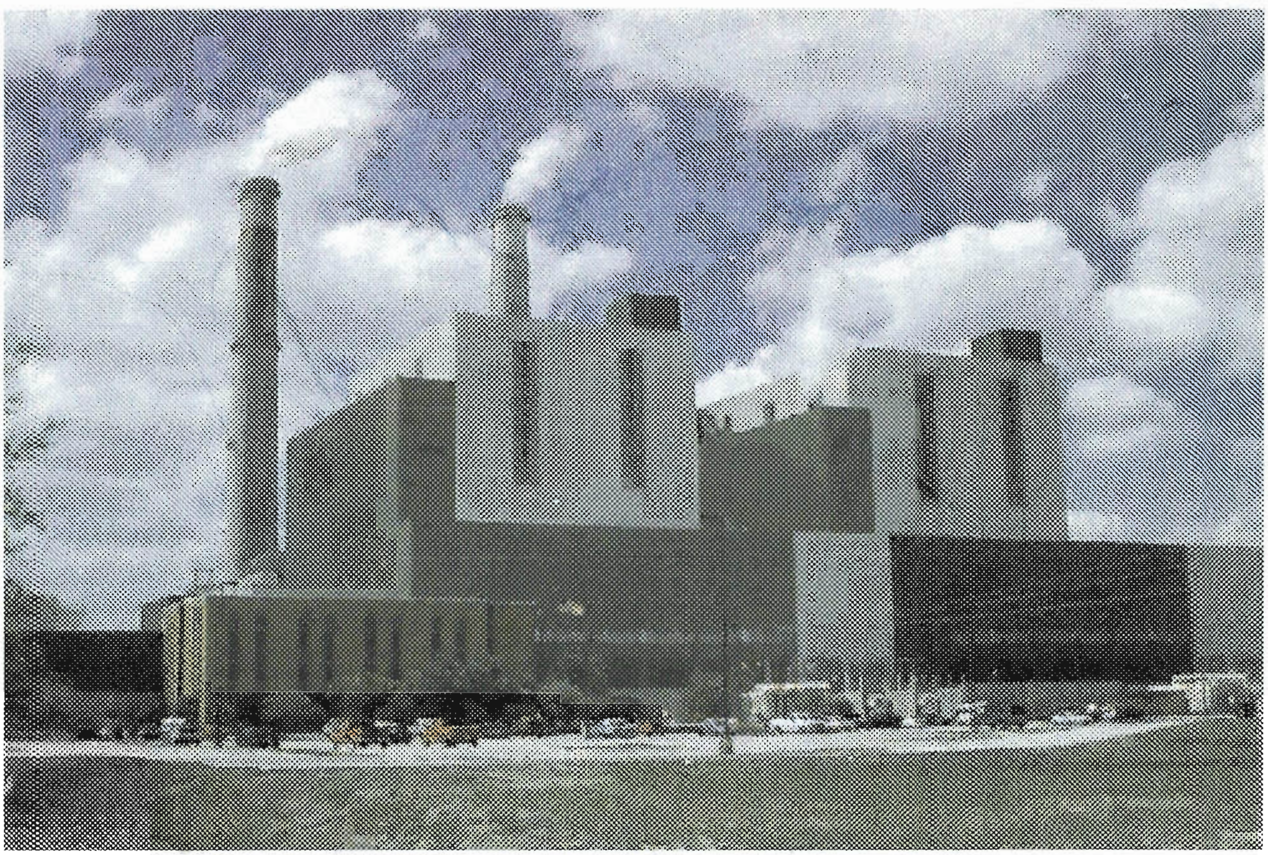

Title V Operating Permit Application

Control No. 1

RECEIVED
APR 14 1997
BUREAU OF
AIR REGULATION

Department of Environmental Protection

DIVISION OF AIR RESOURCES MANAGEMENT

APPLICATION FOR AIR PERMIT - LONG FORM

I. APPLICATION INFORMATION

Identification of Facility Addressed in This Application

1. Facility Owner/Company Name :
Orlando Utilties Commission

2. Site Name :
Curtis H. Stanton Energy Center

3. Facility Identification Number : 30ORL481137 [ ] Unknown

4. Facility Location :
Curtis H. Stanton Energy Center - Units 1 and 2
Orlando Utilities Commission
4.75 MI S SR50,1 MI N BEE
Orlando, Florida 32831

Street Address or Other Locator : 5100 Alafaya Trail
City : Orlando County : Orange Zip Code : 32831-

5. Relocatable Facility?
[ ] Yes [X] No

6. Existing Permitted Facility?
[X] Yes [ ] No

Owner/Authorized Representative or Responsible Official

1. Name and Title of Owner/Authorized Representative or Responsible Official :

Name : Gregory A. DeMuth
Title : Alternate Designated Representative

2. Owner or Authorized Representative or Responsible Official Mailing Address :

Organization/Firm : Orlando Utilities Commission
Street Address : 500 So. Orange Ave.
City : Orlando
State : FL Zip Code : 32801-

3. Owner/Authorized Representative or Responsible Official Telephone Numbers :

Telephone : (407)423-9141 Fax : (407)236-9616

4. Owner/Authorized Representative or Responsible Official Statement :

I, the undersigned, am the owner or authorized representative of the non-Title V source addressed in this Application for Air Permit or the responsible official, as defined in Rule 62-210.200, F.A.C., of the Title V source addressed in this application, whichever is applicable. I hereby certify, based on information and belief formed after reasonable inquiry, that the statements made in this application are true, accurate and complete and that, to the best of my knowledge, any estimates of emissions reported in this application are based upon reasonable techniques for calculating emissions. The air pollutant emissions units and air pollution control equipment described in this application will be operated and maintained so as to comply with all applicable standards for control of air pollutant emissions found in the statutes of the State of Florida and rules of the Department of Environmental Protection and revisions thereof. I understand that a permit, if granted by the Department, cannot be transferred without authorization from the Department, and I will promptly notify the Department upon sale or legal transfer of any permitted emissions units.*

Signature

4/11/97
Date

* Attach letter of authorization if not currently on file.

Scope of Application

Emissions Unit ID	Description of Emissions Unit	Permit Type
001	Boiler Unit #1	
002	Auxiliary Boiler - serves both units	
003	Material Handling - serves both units	
004	Water Treatment - serves both units	
005	Unconfined Emissions - both units	
006	Boiler Unit #2	

Purpose of Application and Category

Category I : All Air Operation Permit Applications Subject to Processing Under Chapter 62-213, F.A.C.

This Application for Air Permit is submitted to obtain :

[**X**] Initial air operation permit under Chapter 62-213, F.A.C., for an existing facility which is classified as a Title V source.

[ ] Initial air operation permit under Chapter 62-213, F.A.C., for a facility which, upon start up of one or more newly constructed or modified emissions units addressed in this application, would become classified as a Title V source.

Current construction permit number :

[ ] Air operation permit renewal under Chapter 62-213, F.A.C., for a Title V source.

Operation permit to be renewed :

[ ] Air operation permit revision for a Title V source to address one or more newly constructed or modified emissions units addressed in this application.

Current construction permit number :

Operation permit to be revised :

[ ] Air operation permit revision or administrative correction for a Title V source to address one or more proposed new or modified emissions units and to be processed concurrently with the air construction permit application.

Operation permit to be revised/corrected :

[ ] Air operation permit revision for a Title V source for reasons other than construction or modification of an emissions unit.

Operation permit to be revised :

Reason for revision :

Category II : All Air Operation Permit Applications Subject to Processing Under Rule 62-210.300(2)(b), F.A.C.

This Application for Air Permit is submitted to obtain :

[ ] Initial air operation permit under Rule 62-210.300(2)(b), F.A.C., for an existing facility seeking classification as a synthetic non-Title V source.

Current operation/construction permit number(s) :

[ ] Renewal air operation permit under Fule 62-210.300(2)(b), F.A.C., for a synthetic non-Title V source.

Operation permit to be renewed :

[ ] Air operation permit revision for a synthetic non-Title V source.

Operation permit to be revised :

Reason for revision :

Category III : All Air Construction Permit Applications for All Facilities and Emissions Units

This Application for Air Permit is submitted to obtain :

[ ] Air construction permit to construct or modify one or more emissions units within a facility (including any facility classified as a Title V source).

Current operation permit number(s), if any :

[ ] Air construction permit to make federally enforceable an assumed restriction on the potential emissions of one or more existing, permitted emissions units.

Current operation permit number(s) :

[ ] Air construction permit for one or more existing, but unpermitted, emissions units.

Application Processing Fee

Check one :

[ ] Attached - Amount : ____________ [X] Not Applicable.

Construction/Modification Information

1. Description of Proposed Project or Alterations :

The Stanton Energy Center consist of two boilers - Unit #1 and Unit #2. This application revises the initial Title V Operating Permit application submitted 6/15/96 to include the recently constructed Boiler #2 along with the necessary modifications of material handling, water treatment and unconfined emissions. Boiler #2 has lower emissions due to SCR to control NOx. Other emissions are also lower such as SO2 and PM. All other emission units are shared. However, the throughput of the shared emission units have been increased to account for Boiler Unit #2.

2. Projected or Actual Date of Commencement of Construction : 01-Feb-1992

3. Projected Date of Completion of Construction : 29-Mar-1996

Professional Engineer Certification

1. Professional Engineer Name : G. Preston Lewis, P.E.
Registration Number : 41755

2. Professional Engineer Mailing Address :

Organization/Firm : ENSR
Street Address : P.O. Box 13206
City : Tallahassee State : FL Zip Code : 32317-3206

3. Professional Engineer Telephone Numbers :
Telephone : (904)385-0808 Fax : (904)385-5457

4. Professional Engineer Statement :

I, the undersigned, hereby certified, except as particularly noted herein, that :*

(1) To the best of my knowledge, there is reasonable assurance that the air pollutant emissions unit(s) and the air pollutant control equipment described in this Application for Air Permit, when properly operated and maintained, will comply with all applicable standards for control of air pollutant emissions found in the Florida Statutes and rules of the Department of Environmental Protection; and

(2) To the best of my knowledge, any emission estimates reported or relied on in this application are true, accurate, and complete and are either based upon reasonable techniques available for calculating emissions or, for emission estimates of hazardous air pollutants not regulated for an emissions unit addressed in this application, based solely upon the materials, information and calculations submitted with this application.

If the purpose of this application is to obtain a Title V source air operation permit (check here [✓] if so), I further certify that each emissions unit described in this Application for Air Permit, when properly operated and maintained, will comply with the applicable requirements identified in this application to which the unit is subject, except those emissions units for which a compliance schedule is submitted with this application.

If the purpose of this application is to obtain an air construction permit for one or more proposed new or modified emissions units (check here [ ] if so), I further certify that the engineering features of each such emissions unit described in this application have been designed or examined by me or individuals under my direct supervision and found to be in conformity with sound engineering principles applicable to the control of emissions of the air pollutants characterized in this application.

If the purpose of this application is to obtain an initial air operation permit or operation permi revision for one or more newly constructed or modified emissions units (check here [ ] if so), I further certify that, with the exception of any changes detailed as part of this application, each such emissions has been constructed or modified in substantial accordance with the information given in the corresponding application for air construction permit and with all provisions contained in such permit.

Signature

3/26/97
Date

*Attach any exception to certification statement.

Application Contact

1. Name and Title of Application Contact : Name : Robert F. Hicks Title : Senior Environmental Engineer	
2. Application Contact Mailing Address : Organization/Firm : Orlando Utilities Commission Street Address : 300 South Orange Avenue City : Orlando State : FL	Zip Code : 32802-3193
3. Application Contact Telephone Numbers : Telephone : (407)423-9133	Fax : (407)236-9616

Application Comment

Alternate Contacts for the Application:

Preston Lewis, P.E.	(904) 385-0808
Barry Andrews, P.E.	(205) 767-1210

ORLANDO UTILITIES COMMISSION

LIST OF FIGURES, SUPPLEMENTS AND ATTACHMENTS

ITEM ID	DESCRIPTION	WHERE REFERENCED
Figure 1-1	Area Map	Facility Supplemental
Figure 2-1	Facility Plot Plan	Facility Supplemental
Figure 3-1 through 3-6	Process Flow Diagrams	Facility/E.U. Suppl.
Figure 4-1	Emissions Inventory	Facility/E.U. Suppl.
FSI 04	Prevention of Fugitive Emissions	Facility Supplemental
Appendix A	Fugitive Emissions	Facility Supplemental
FSI 08	Title VI Equip.	Facility Supplemental
FSI 09	Alternate Methods	Facility Supplemental
Appendix C	Compliance Plan & Report	Facility Supplemental
Appendix D	Additional Regulations	E.U. Supplemental
Appendix E	Control Equipment	E.U. Supplemental
Appendix F	Fuel Analysis	E.U. Supplemental
Appendix G	Stack Sampling Fac.	E.U. Supplemental
Appendix H	Compliance Test Report	E.U. Supplemental
Appendix I	Startup/shutdown Procedures	E.U. Supplemental
Appendix J	Operation & Maintenance Plan	E.U. Supplemental
Appendix K	Acid Rain Application	E.U. Supplemental
Appendix L	Potential Emission Calculations	E.U. Supplemental

FIGURE 1-1

AREA MAP

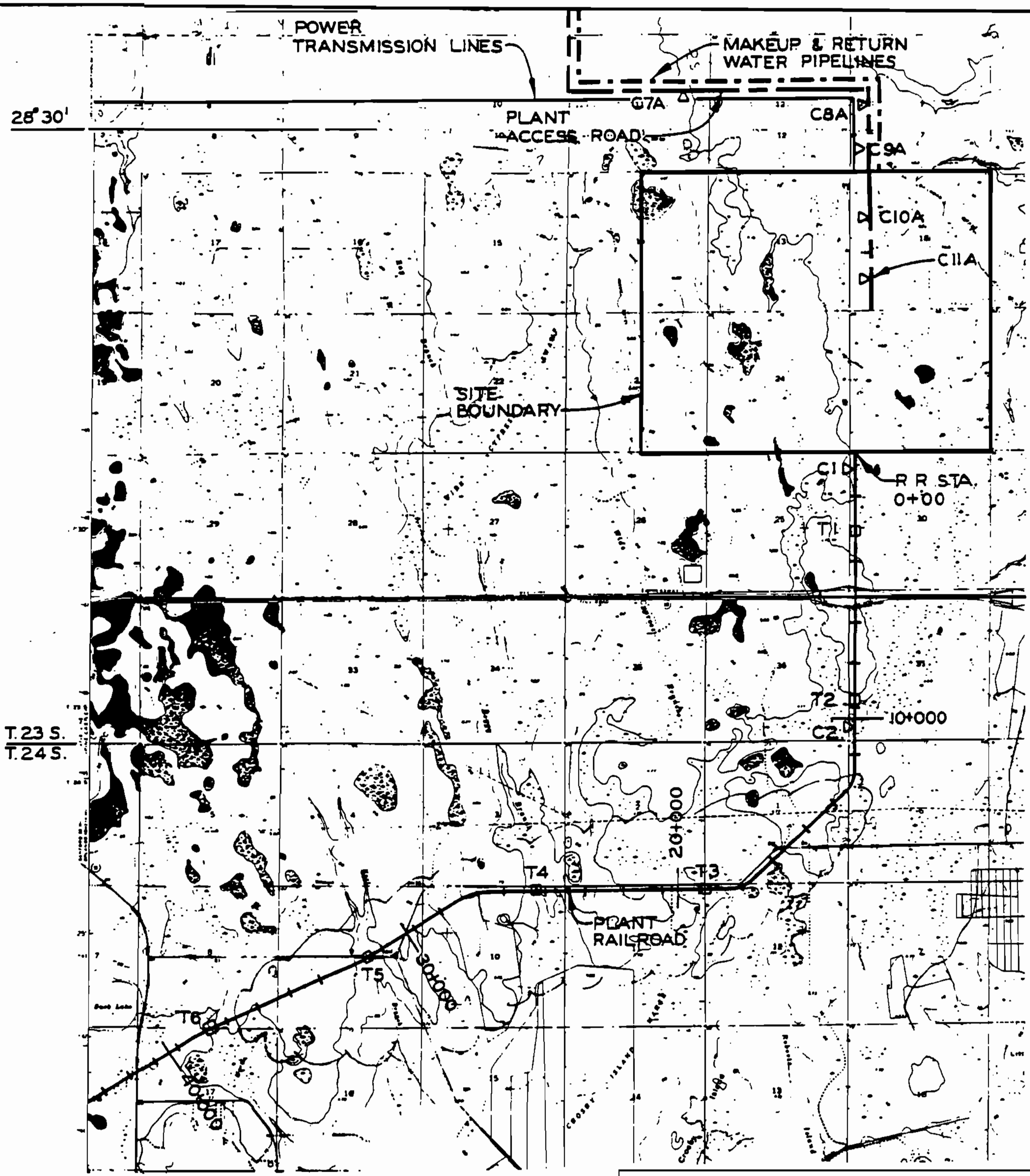

ENSR Consulting and Engineering

FIGURE 1-1
Area Map
Orlando Utilities Commission
Curtis H. Stanton Energy Center

DRAWN: MBA	DATE: 03/18/96	PROJECT NO. 9420-063-200	REV: 0
FILE NO.:OUC1.PRE	CHECKED:GPL		

FIGURE 2-1

FACILITY PLOT PLAN

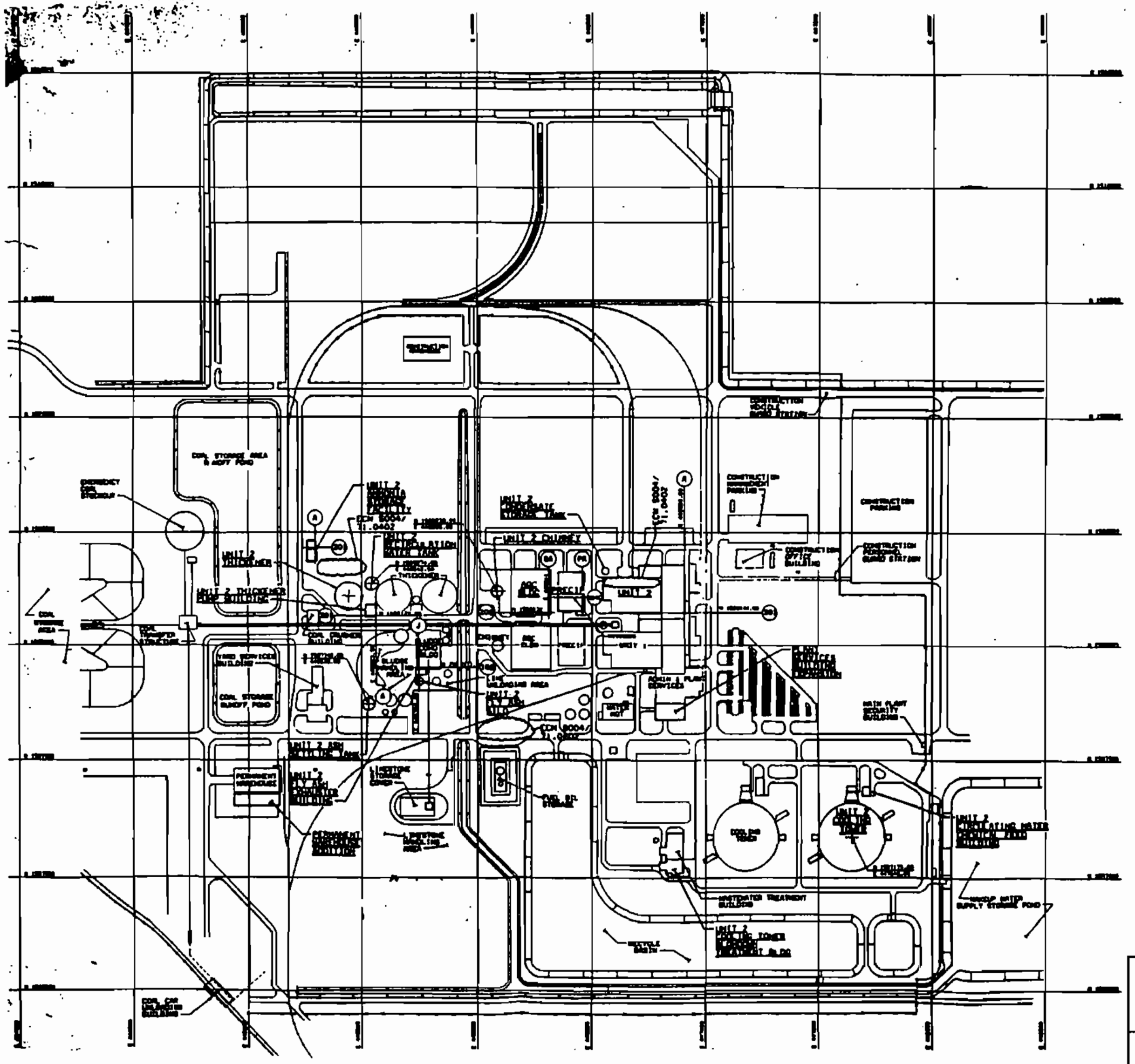

ENSR

ENSR Consulting and Engineering

FIGURE 2-1

Facility Plot Plan

Orlando Utilities Commission

Curtis H. Stanton Energy Center

DRAWN: MBA	DATE: 03/18/97	PROJECT NO 1050-018-290:	REV 0
FILE NO.: OUC2.PRE	CHECKED: GPL		

FIGURE 3-1

PROCESS FLOW DIAGRAMS

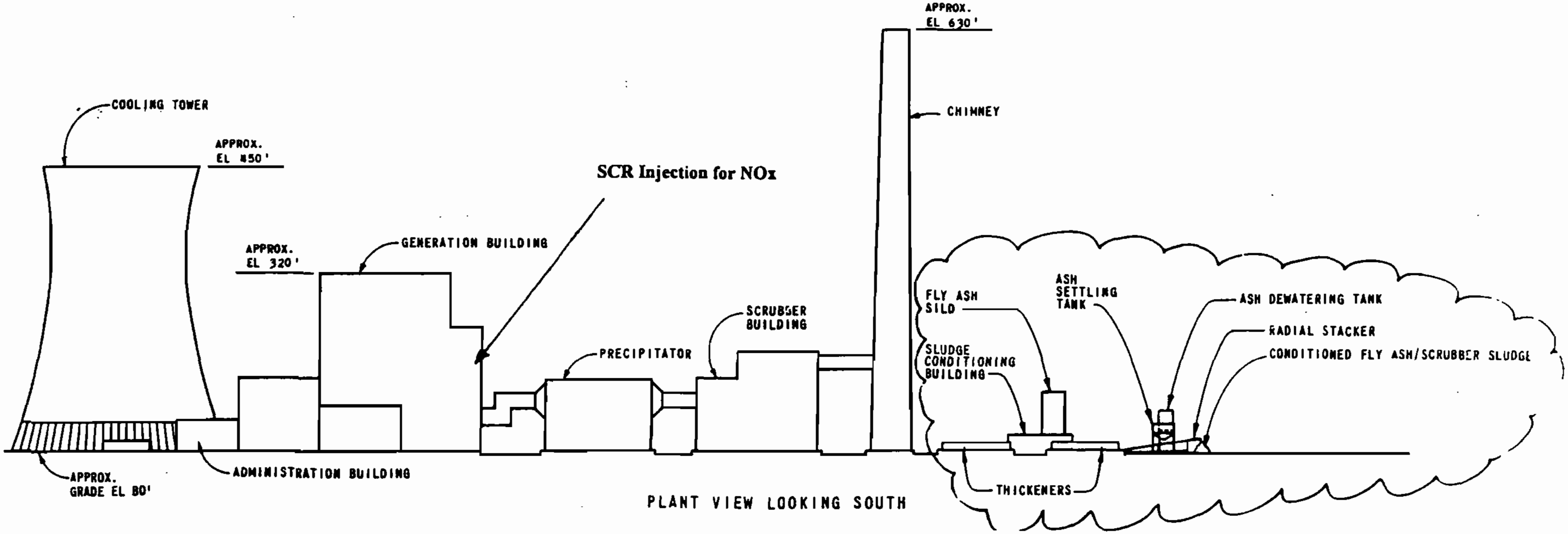

PLANT VIEW LOOKING SOUTH

Typical for either Unit #1 or Unit #2. Only Unit #2 has SCR.

ENSR Consulting and Engineering

FIGURE 3-1
Process Flow Diagram
Generation Facilities Profile
Orlando Utilities Commission
Curtis H. Stanton Energy Center

DRAWN: MBA	DATE: 03/18/97	PROJECT NO 1050-018-290:	REV 0
FILE NO.: OUC3-1.PRE	CHECKED: GPL		

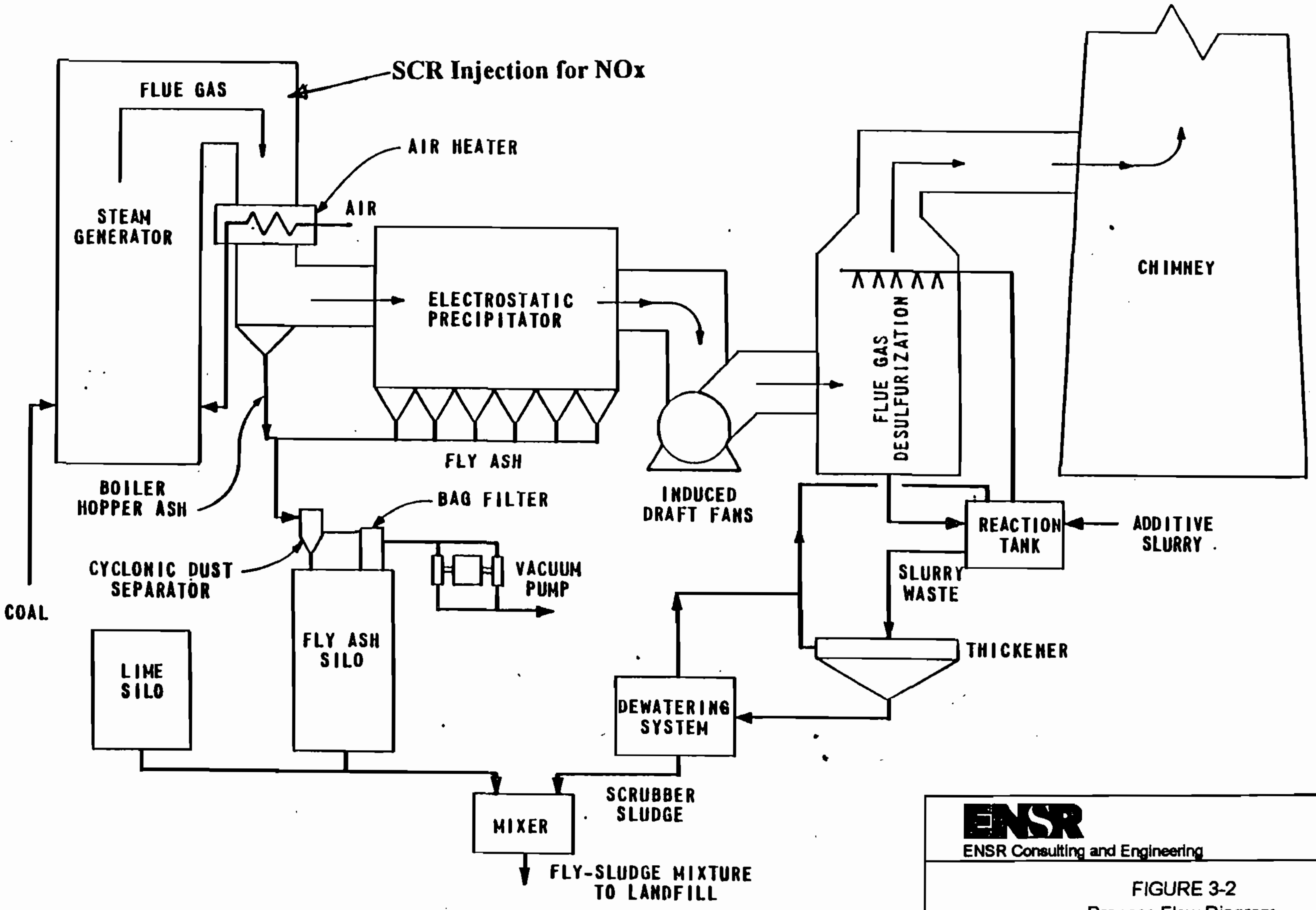

Typical for either Unit #1 or Unit #2. Only Unit #2 has SCR.

ENSR
ENSR Consulting and Engineering

FIGURE 3-2
Process Flow Diagram
Flue Gas Cleaning
Orlando Utilities Commission
Curtis H. Stanton Energy Center

DRAWN: MBA
FILE NO.: OUC3-2.PRE
DATE: 03/18/97
CHECKED: GPL
PROJECT NO
1050-018-290:
REV
0

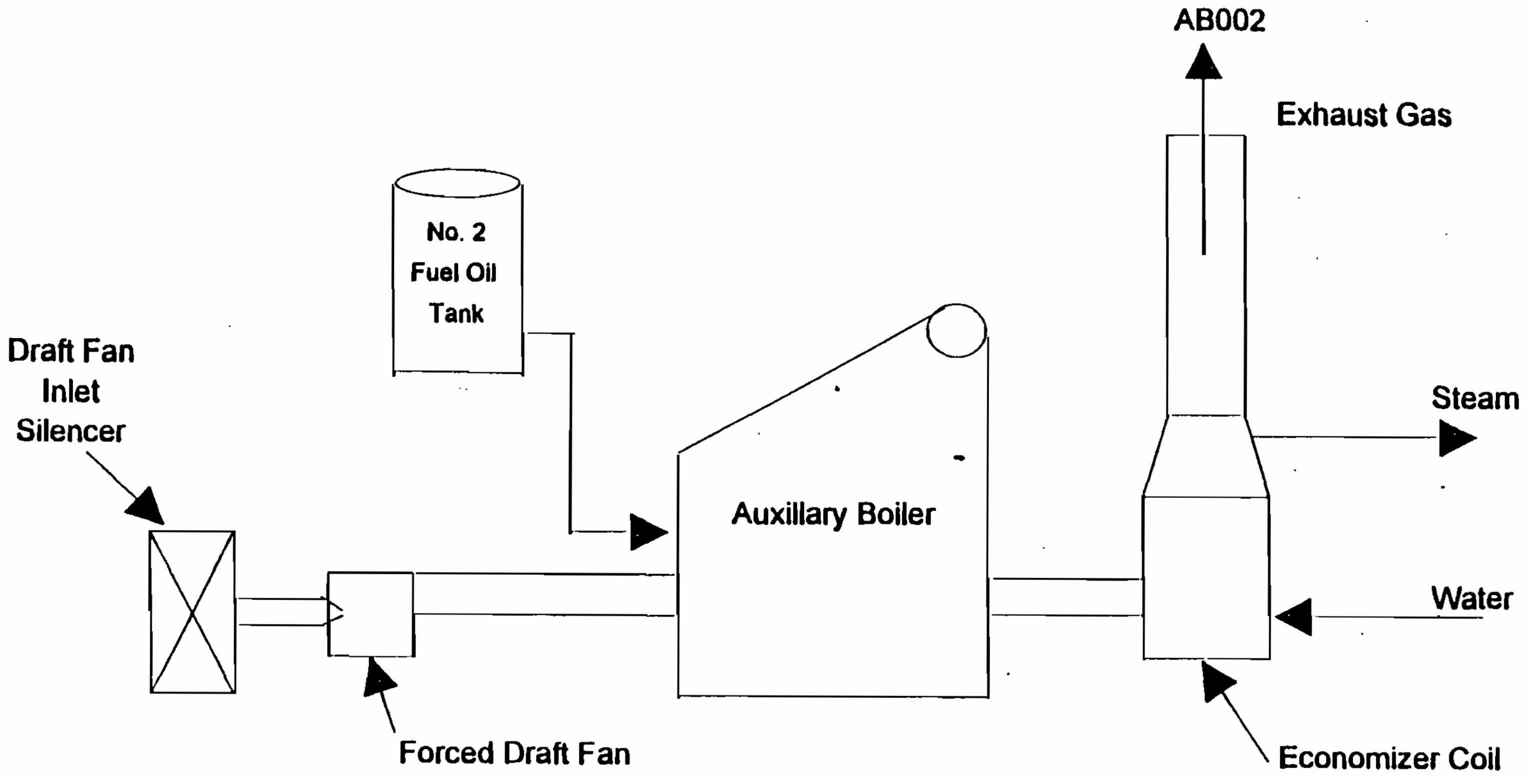

ENSR
ENSR Consulting and Engineering

FIGURE 3-3
Process Flow Diagram
Auxillary Boiler
Orlando Utilities Commission
Curtis H. Stanton Energy Center

DRAWN: MBA	DATE: 03/18/97	PROJECT NO 1050-018-290:	REV 0
FILE NO.: OUC3-3.PRE	CHECKED: GPL		

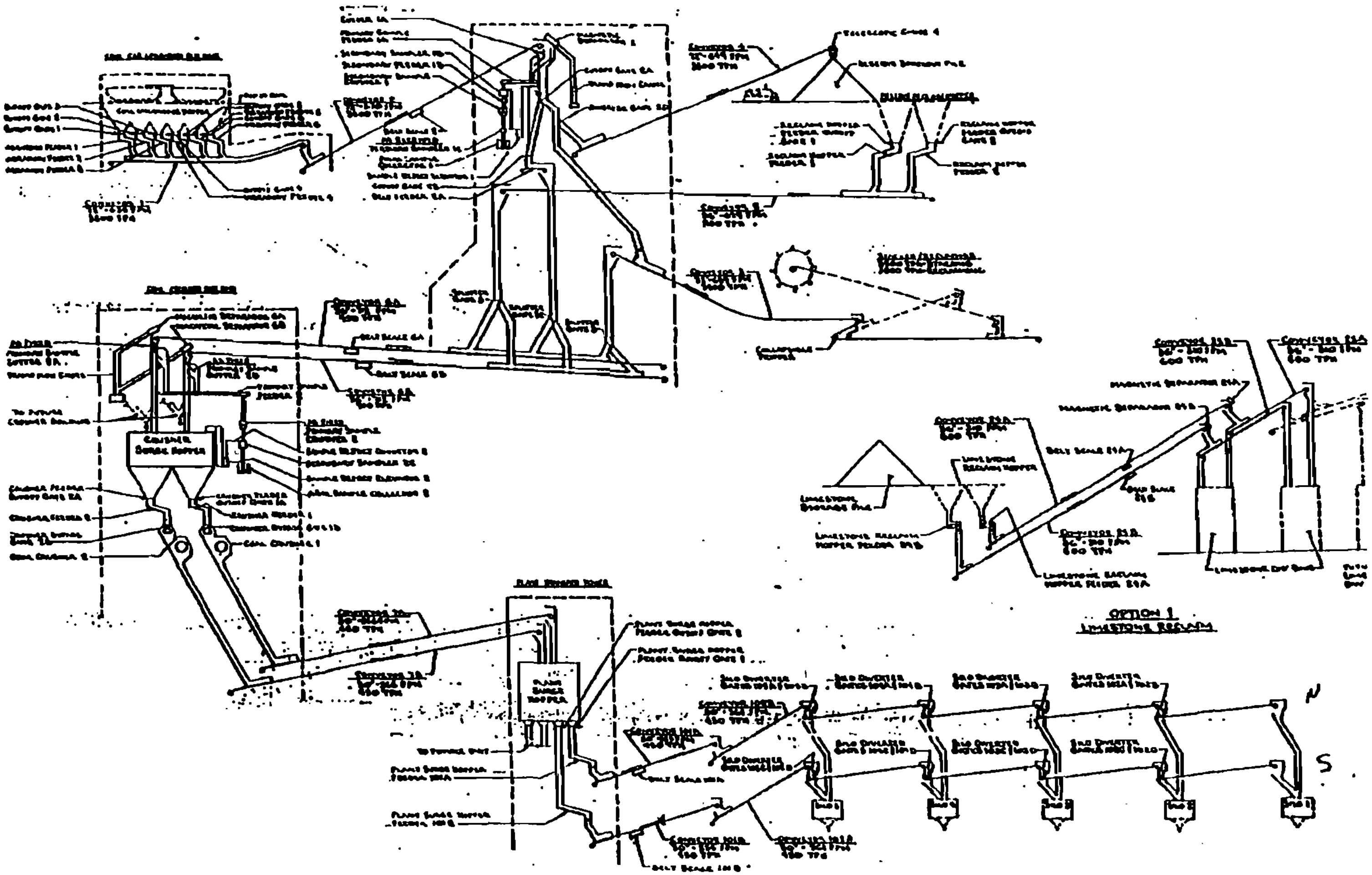

ENSR

ENSR Consulting and Engineering

FIGURE 3-4
Process Flow Diagram
Material Handling
Orlando Utilities Commission
Curtis H. Stanton Energy Center

DRAWN: MBA	DATE: 03/18/97	PROJECT NO	REV
FILE NO.: OUC3-4.PRE	CHECKED: GPL	1050-018-290:	0

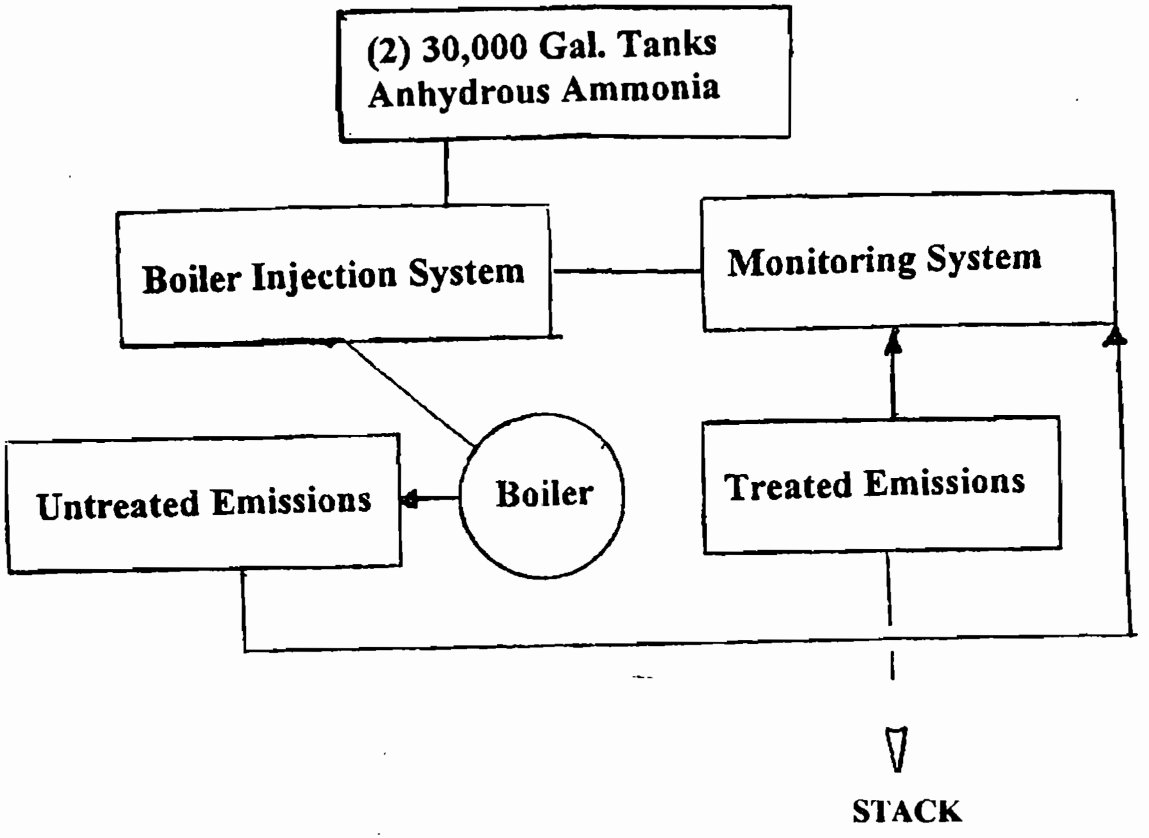

ENSR
ENSR Consulting and Engineering

FIGURE 3-5
Process Flow Diagram
Selective Catalytic System
Orlando Utilities Commission
Curtis H. Stanton Energy Center

DRAWN: MBA	DATE: 03/18/97	PROJECT NO 1050-018-290:	REV 0
FILE NO.: OUC3-5.PRE	CHECKED: GPL		

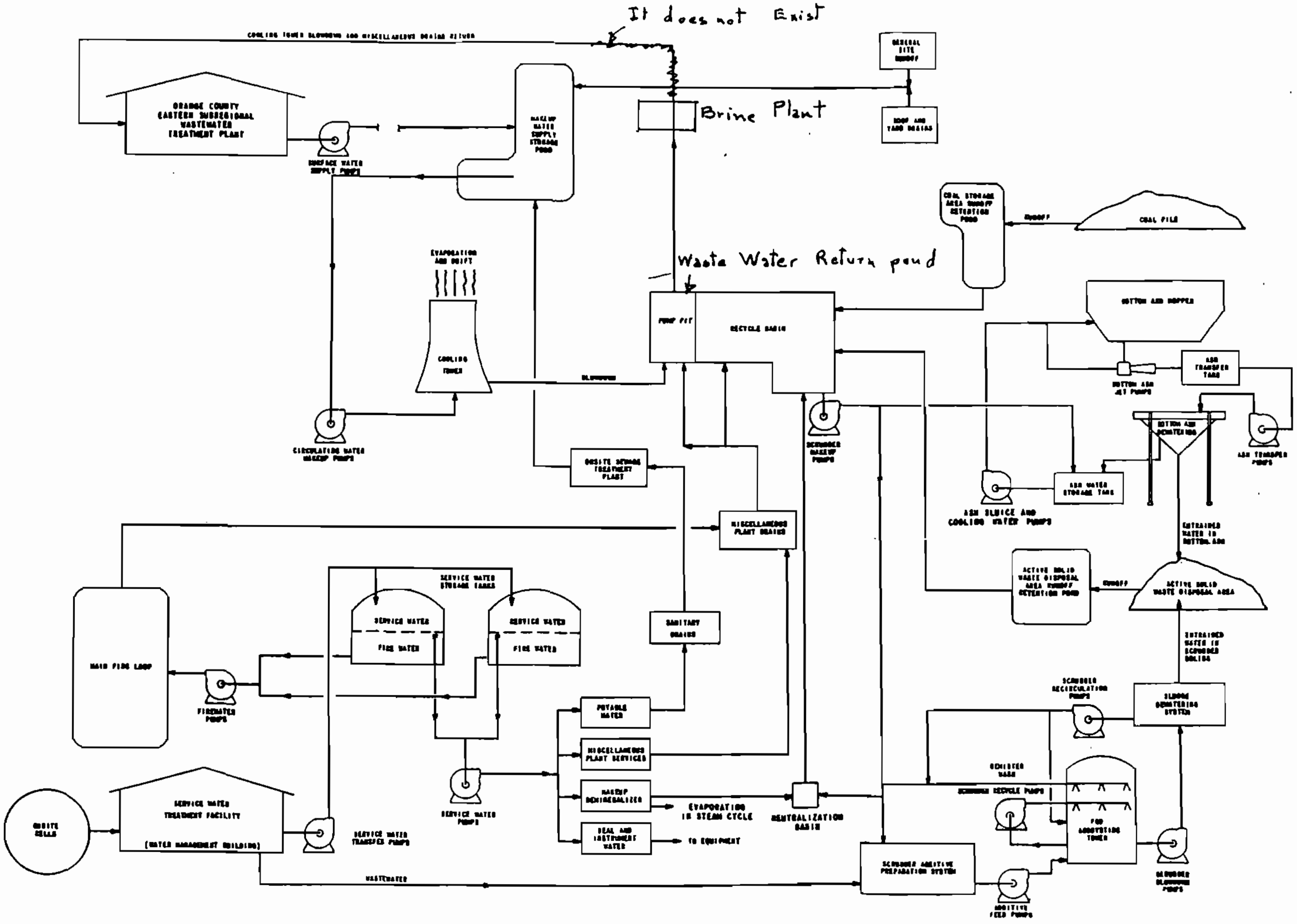

ENSR
ENSR Consulting and Engineering

FIGURE 3-6
Process Flow Diagram
Water Supply And Storage
Orlando Utilities Commission
Curtis H. Stanton Energy Center

DRAWN: MBA	DATE: 03/18/97	PROJECT NO 1050-018-290:	REV 0
FILE NO.: OUC3-6.PRE	CHECKED: GPL		

FIGURE 4-1

EMISSIONS INVENTORY

Source Identification Number	Plant Area/Dept.	Source Description	Emission Classification	Reference	Comments	Required Parameters
	PB	Fossil Unit #1	Significant	AOR 1994	Limestone Scrubber, ESP, coal, Nos. 1,2,6; bottom ash Wet - Jet Pump to Ash xfer tk, Ammonia Sys.	Permit conditions, Coal analysis, Coal
BLR-1	PB	Auxiliary Boiler #1	Significant	1PSA-M2061	Used for startups.	Fuels, Fuel analysis (%S, %Pb, BTU), highest anticipated qtr., operating hours.
1ASB-SLO-1		#1 Fly Ash Silo - Collector 1 #1 Fly Ash Silo - Collector 2 #1 Fly Ash Silo - Silo Vent	Significant	1ASB-M2022Cr7	Fly Ash Silo - 2 separators w/filters (6) exhausters), silo vent filter, telescopic chute blower (blows into silo)	Hours of operation, dscfm or acfm and exit temp.
CTW-1	WT	#1 Cooling Tower	Significant	1HRC-M2263r8 1HRE-M2265?	Cl, PM, PM10. Although presumptive exempt per DEP letter, cooling towers have been calculated as a significant source at other facilities.	Total solids approx. 3,000 to 6,000 ppm, Free Cl 0.05 to 0.2 ppm, Curc. rate 225,000 gpm, Makeup rate 3.5E+06 gpd avg per unit. Max evap. rate would be $3,500,000 - 504,000 = 2,996000 gpd.) Drift = <0.5% of circ. rate.
	PB	Fossil Unit #2	Significant	AOR 1994	Limestone, ESP	
		#2 Fly Ash Silo - Collector 1 #2 Fly Ash Silo - Collector 2 #2 Fly Ash Silo - Silo Vent	Significant	1ASB-M2022Cr7		
	WT	#2 Cooling Tower	Significant			
	CH	Coal Car Unloading to Belt 1	Significant	1CHU-M2120 r5	Wet supp, No dust collector	Coal % moiusture as rec'd, Hours of operation, Annual coal throughput max, Hourly max coal
	CH	Belt 1 to Belt 2 Transfer	Significant		No Dust Collector	Coal % Moisture as rec'd; Hours of Operation; Annual Coal Throughput Max, Hourly Max Coal
	CH	Stacker/Reclaimer Operation	Significant		No Dust Control. No visible emissions witnessed, but not automatically exempt.	Coal Moisture %, Hours of operation, Wind speed (ENSR can get wind speed from several sources.)
1CHF-DCO-1	CH	Transfer Building Dust Collector Jet Pulse 512S10	Significant		Controls Transfers to/from Belts 2, 3, 4, 5, 6a, and 6b	Hours of operation; dscfm or acfm and exit temp. Book ACFM = 48,154 cfm; assume exit T=80F?
1CHF-DCO-2	CH	Crusher Building Dust Collector Jet Pulse 352S10	Significant		Controls Transfers from Belts 6a, 6b to Crushers and from Crushers to Belts 7a, 7b	Hours of operation; dscfm or acfm and exit temp. Book ACFM-33,557 cfm; assume exit T=80F?
	CH	Emergency (Reserve) Stockout Transfer	Significant		Telescoping chute	Coal Moisture %, Hours of operation, Wind speed 9ENSR can get wind speed from sources.)
1CHF-DCO-6	CH	*Emergency (Reserve) Reclaim Dust Collector Jet Pulse 70C10*	Significant			Hours of operation; dscfm or acfm and exit temp. Book ACFM=6,451 cfm; assume exit T=80?

SOURCE.WK4

ENSR
ENSR Consulting and Engineering

FIGURE 4-1

EMISSIONS INVENTORY (5 PAGES)

Orlando Utilities Commission
Curtis H. Stanton Energy Center

DRAWN: gpl	DATE: March 26, 1997	PROJECT NO.: 9420-063-200	REV: 1
FILE NO.: ouc4-1.pre	CHECKED: ba		

Source Identification Number	Plant Area/Dept.	Source Description	Emission Classification	Reference	Comments	Required Parameters
1CHF-DCO-3	CH	Plant Transfer Dust Collector Jet Pulse 832S10	Significant		Controls Transfers from 7a, 7b to transfer conveyors, cascade conveyors, silos.	Hours of operation; dscfm or acfm and exit temp. Book ACFM-79,052 cfm; assume exit T=80F?
	CH	Coal Storage Pile Wind Erosion	Significant		Since permit has specific requirements on practices to minimize PM emissions, may have to calculate to demonstrate. (See also conditions for "moveable drop transfer point" in letter.)	Coal moisture %, size and shape of pile (may obtain frmo drawing); silt content; meteorological data (may use that in application, or obtain from Orlando Airport.)
	CH	Coal Emergency Stockout Pile Wind Erosion	Significant			Coal moisture%, size and shape of pile (may obtain from drawing); silt content; meteorological data (may use that in application, or obtain from Orlando Airport.)
	LH	Limestone Receiving	Significant		Truck back dump. Are there plan to add rail system? Uncontrolled.	Quantities of limestone max annual, max hourly; moisture % as received.
	LH	Limestone Reclaim	Significant		Uncontrolled.	Quantities of limestone max annual, max hourly; moisture % as received.
1CHF-DCO-4	LH	Limestone Hopper (Day Bin) Dust Collector Jet Pulse 256C10	Significant		Controls transfer from limestone conveyor to silo.	Hours of operation; dscfm or acfm and exit temp. Book ACFM=22,930 cfm; assume exit T=80F?
	LH	Limestone Storage Pile Wind Erosion	Significant		Underneath shelter, but sides open. Item 6 in DEP letter.	NONE, unless calc desired. Pile dimensions, % moisture, % silt.
1BMD-SLO-1	YD	Lime Storage Silo for Sludge Fixation	Significant	1ASE-M2025D r6		Hours of operation; dscfm or acfm and exit temp.
	AH	Unpaved Road for "Geo-Tech" Fixated Ash Disposal	Significant			Vehicle miles traveled, silt content, mean vehicle speed, mean vehicle weight, mean number of wheels.
	YD	Paved Roads Plant Vehicle Traffic	Significant		Wetting	Vehicle miles traveled, surface material silt % lanes=2, dust loading, vehicle loaded wt. and unloaded wt.
		Bead Blasting	Significant		Presumptive exempt if area enclosed or dust control. Neither enclosure nor dust control is used at Stanton, therefore, need to calculate PM	Quantity of blast media used per year, and hours per year blasting occurs.
		Painting for Maintenance	Significant		Item 10 in DEP letter states "Presumptive exemption except for painting/coating applications." Thus, painting for maintenance is *not presumed exempt, but must be quantified.*	Total paint to be used for maintenance purposes (exclude initial construction). VOC content of paints. May need to speciate HAPs.
	WT	Service Water Tanks (3)	Significant		Cl added prior to tanks.	Free Ci 0.5-5 ppm; 350,000 gpd; adding Unit 2 would increase to 450,000 gpd.

SOURCE.WK4

ENSR

ENSR Consulting and Engineering

FIGURE 4-1

EMISSIONS INVENTORY (5 PAGES)

Orlando Utilities Commission
Curtis H. Stanton Energy Center

DRAWN: gpl	DATE: March 26, 1997	PROJECT NO.: 9420-063-200	REV: 1
FILE NO.: ouc4-1.pre	CHECKED: ba		

Source Identification Number	Plant Area/Dept.	Source Description	Emission Classification	Reference	Comments	Required Parameters
	WT	Clearwell	Significant		No vents located, any emissions may be through manhole in building.	Free Cl 1-5 ppm; 1400 gpm; 350,000 gpd; adding Unit 2 would increase to 450,000 gpd.
	CH	Coal Pile Traffic "movement, shaping, etc.)	Significant		Use unpaved road eqn.	Vehicle miles traveled, silt content, mean vehicle speed, mean vehicle weight, mean number of wheels.
1BMB-SLO-1	*LH*	*Limestone Storage Silo for Wet Grinding*	NA	1BMC-M2103 r7	*Dust collector.*	Hours of operation; dscfm or acfm and exit temp.
1BMB-SLO-2	LH	Limestone Storage Silo for Wet Grinding	NA	1BMC-M2103 r7	Dust collector.	Hours of operation; dscfm or acfm and exit temp
	TX	Igniter Oil Tk TNK-1	Significant	1FOA-M2401 r6; 1FOB0N2492	No. 6 F.O.	Tank dimensions, capacity, fixed roof, normal operating level, throughput.
	TX	Aux Oil tk TNK-2	Significant	1FOA-M2401 r6; 1FOB-M2402	Mobile Eqpt; No. 2 F.O.	Tank dimensions, capacity, fixed roof, normal operating level, throughput.
8430991-313-00-01	WT	Pre-treatment Lime Hopper	Significant	1WTB-M2682 r4	Dust collector DCO-1 vents inside building.	80 tpy, 100 tpy with Unit 2. Need flow rate dscfm or acfm, assume 85 F exit Temp?
	AH	Fixated Ash Disposal	Presumed Exempt		Wet meaterial, hardens as it dries.	None.
	MT	Welding; transformers vaults; degasifiers, deaerators; air blowers	Presumed Exempt		Item 18 in DEP letter.	None.
	PB	Reaction Tanks for Absorbers (3)	Presumed Exempt		Although vent to outside building, should not haev regulated pollutants. Could have flue gas if a seal is broken, but this would be an upset condition.	None.
	PB	Flue Gas Desulfurizaztion System Absorber Feed Tank Mist eliminator/Spray Header Vent (3 Systems)	Presumed Exempt		Item 43 in DEP letter.	None.
	PB	Mobile Vacuum Cleaning	Presumed Exempt	1PMC-M2483 r3	Item 14 in DEP letter.	None.
	PB	Turbine Vapor Extractors	Presumed Exempt		Item 31 in DEP letter.	None.
	PB	All Low Vapor Pressure Oil Systems (<0.5 mm Hg)	Presumed Exempt		Low vapor pressure.	None.
	PB	Central Vacuum System	Presumed Exempt		Item 14 in DEP letter.	None.
	PB	CEM Testing Equipment	Presumed Exempt		Item 15 in DEP letter.	None
	SC	Vacuum Pump Exhausts for Mixers from SGD	Presumed Exempt		No pollutants.	None.

SOURCE.WK4

ENSR
ENSR Consulting and Engineering

FIGURE 4-1

EMISSIONS INVENTORY (5 PAGES)

Orlando Utilities Commission
Curtis H. Stanton Energy Center

DRAWN: gpl	DATE: March 26, 1997	PROJECT NO.: 9420-063-200	REV: 1
FILE NO.: ouc4-1.pre	CHECKED: ba		

Source Identification Number	Plant Area/Dept.	Source Description	Emission Classification	Reference	Comments	Required Parameters
	TX	Lube Oil dump Tk Tnk-2	Presumed Exempt	1TGD-M2624 r6	Low vapor pressure.	Tank dimensions, capacity, fixed roof, normal operating level, throughput.
	TX	Turbine Lube Oil Tk TNK-1	Presumed Exempt	1TGD-M2624 r6	Low vapor pressure.	Tank dimensions, capacity, fixed roof, normal operating level, throughput.
	TX	*Sulfuric Acid Tanks (4); Outside Boiler, 4,500* Gal; Across from Service Tanks, 7,500 Gal; Cooling Tower, 11,700 Gal; Brine Plant, 5,000 Gal.	Presumed Exempt		H2S04 emissions. Item 27 in DEP letter	Capacity, throughput, normal level, dimensions.
	TX	Anti-Foam Chemical Tk	Presumed Exempt	1CCC-M2143D r)		None.
	WT	Storage and Used of Chemicals Solely for Water/Waste Water Treatment (H2S04, Hydrazine, NaOH, biocides, NH3, etc.)	Presumed Exempt		Item 27 in DEP letter. Note, however, that if Cl emissions are greater than 10 tons per year, exemption may not apply.	Cl figure per emission unit.
	WT	Coal Pile Runoff Pond (lined)	Presumed Exempt		*Presumptive exempt if unlined. No reason to* expect any more emissions from a lined coal runoff pond than an unlined coal runoff poind.	None.
	WT	Laboratory Hoods (4): Scrubber Lab, Main Lab, Coal Lab, VFL Lab	Presumed Exempt		Exempt by 62-210.300(3)(n), if used exclusively for chemical or physical analysis.	None.
	WT	Sewage Treatment	Presumed Exempt		Item 25 in DEP letter.	None
	YD	Painting Applications for Construction Purposes.	Presumed Exempt		Title V is not a construction permit.	
	YD	Routine Maintenance/Repair Activities Other than Painting	Presumed Exempt		Item 10 in DEP letter.	None.
	YD	Transformer Switchgear Operation and Maintenance	Presumed Exempt		Item 19 in DEP letter.	None
	YD	Neutralization Ponds, Percolation Ponds	Presumed Exempt		Item 28 in DEP letter.	None.
	YD	Emergency Diesel Generator	Presumed Exempt	1APK-M2051r3	Rule 17-210.300(3)(l), if diesel and operated less than 400 hrs/yr., otherwise presumed exempt.	Operates 0.5 hr/wk = 26 hr/yr.
	YD	Oil Water Separators	Presumed Exempt		Should be presumptive exempt, based on size, lack of VOCs, and descriptions for Items 23, 27 and 28 in DEP letter. Only reason for VOC would be from diesel spill, which is not normal operating conditions.	Clarify with DEP.
	YD, PB	All Storage Tanks Less than 550 Gallons if Closed	Presumed Exempt		Item 40 in DEP letter.	None.

SOURCE.WK4

ENSR
ENSR Consulting and Engineering

FIGURE 4-1
EMISSIONS INVENTORY (5 PAGES)
Orlando Utilities Commission
Curtis H. Stanton Energy Center

DRAWN: gpl	DATE: March 26, 1997	PROJECT NO.:	REV:
FILE NO.: ouc4-1.pre	CHECKED: ba	9420-063-200	1

Source Identification Number	Plant Area/Dept.	Source Description	Emission Classification	Reference	Comments	Required Parameters
	WT	Well Water Aeration (H2S removal) (2)	Insignificant			H2S conc. well water ________; 736E+08 gpy; 1400 to 84,000 gpm; 350,000 gpd, 450,000 gpd w/Unit 2
	ALL	Roof Ventilators	Exempt		Item 17 in DeP letter.	None.
	ALL	All Steam Vents	Exempt		Steam not a pollutant.	None.
	ALL	Sanitary Vents	Exempt		Item 23 from DEP letter.	None.
	IC	Diesel Engine Driven-Fire Pumps (2)	Exempt		Rule 17-210.300(3)(l), if diesel and operated less than 400 hrs/yr., otherwise presumed exempt.	Operates 0.5 hr/wk = 26 hr/yr.
	MT	Parts Washers	Exempt		Exempt - solvent does not contain VOC or HAPs (i.e. no opollutants). Use non-halogenated solvent only. See also Rule 17-213.420*3)(c)3.b.	Verify against MSDS.
	PB	Generator Venting	Exempt		Item 21 in letter. H2, C02, and air not regulated.	None.
	PB	Battery Room	Exempt		H2 not regulated.	None.
	WT	Brine Concentrators (3)	Exempt		*Per G. Ualtalo, all Cl should have reacted prior to this equipment. Equipment is vented.*	*Cl 0 ppm; Flow A-300 gpm, B-300 gpm, C-600 gpm.*
	YD	Transformers	Exempt		Sealed units.	None.

SOURCE.WK4

ENSR Consulting and Engineering

FIGURE 4-1

EMISSIONS INVENTORY (5 PAGES)

Orlando Utilities Commission
Curtis H. Stanton Energy Center

DRAWN: gpl	DATE: March 26, 1997	PROJECT NO.: 9420-063-200	REV: 1
FILE NO.: ouc4-1.pre	CHECKED: ba		

FSI 04

PREVENTION OF FUGITIVE EMISSIONS

APPENDIX A

FUGITIVE EMISSIONS

FUGITIVE DUST CONTROL

See Application Section 3.7.2.1. Fugitive Dust The fugitive dust controls for coal handling and limestone handling includes fabric filters, partially and totally enclosed conveyors, compaction, water and chemical sprays, and telescopic chutes. Coal handling fugitive dust controls are described in Subsection 3.2.4. Limestone handling fugitive dust controls are described in Subsection 3.9.4. Lime handling fugitive dust controls are described in Subsection 3.9.6.

Another fugitive dust release source for fugitives is the fly ash transport system. Fly ash from the boiler hoppers and electrostatic precipitator hoppers is transported to a fly ash storage silo by a vacuum type pneumatic system. The system consist of vacuum pumps which transport the fly ash to the fly ash storage silo and then vent through fabric filters. Estimated control efficiency is 99+ percent. Estimated emission rates are presented I Section 5.5.

Other fugitive dust sources are traffic on limestone surfaced roads and scrubber sludge landfill operations. The control of this nuisance dust is done by spraying the areas with water or dust palliative.

FSI 08

TITLE VI EQUIPMENT

SEC

S.E.C. HVAC - REFRIGERANTS TOTAL CAPACITIES

R-22

1-SCA-CDU-101	(40 LBS.)
1-SCA-CDU-102	(40 LBS.)
1-SCA-CDU-304	(15 LBS.)
1-SCB-CDU-201	(40 LBS.)
1-SCB-CDU-202	(40 LBS.)
1-SCC-CHU-301	(106 LBS.)
1-SCC-CHU-302	(106 LBS.)
1-SCC-CHU-303	(106 LBS.)
1-SCD-CHU-401	(106 LBS.)
1-SCD-CHU-402	(106 LBS.)
1-SCD-CDU-101	(10 LBS.)
1-SAC-CXX-1	(30 LBS.)
1-COE-IRK-52	(7 LBS.)
1-COE-IRK-53	(7 LBS.)
1-SAA-002 W.C.	(6 LBS.)
1-SCE-CDU-501	(40 LBS.)
1-SCF-CDU-601	(40 LBS.)
1-SCG-ACU-701	(3 LBS.)
1-SCH-001	(8 LBS.)
1-SCH-CDU-801	(40 LBS.)
1-SCH-CDU-3	(10 LBS.)
1-SCI-CDU-971	(40 LBS.)
1-SCJ-ACU-921	(10 LBS.)
1-SCJ-CDU-001	(20 LBS.)
1-SCJ-CDU-002	(20 LBS.)
1-SCJ-CDU-003	(20 LBS.)
1-CFM-CDU-001	(80 LBS.)
1-CFM-ACU-101	(7 LBS.)
1-CFM-001	(3 LBS.)
1-SAA-AMS-1	(3 LBS.)
1-CHA-SC-1	(3 LBS.)

TOTAL R-22 = 1112 LBS.

R-12

1-SCC-HXX-302	(3 LBS.)
1-CGB-MXX-1	(6 LBS.)
REFRIGERATORS	(70 LBS.)
ICE MACHINES	(10 LBS.)
WATER FOUNTAINS	(18 LBS.)

TOTAL R-12 = 107 LBS.

R-502

ICE MACHINE	(2.5 LBS.)

TOTAL R-502 = 2.5 LBS.

08/15/94 ES

OMB # 2060-0256
Expiration Date: 5/96

THE UNITED STATES ENVIRONMENTAL PROTECTION AGENCY (EPA) REFRIGERANT RECOVERY OR RECYCLING DEVICE ACQUISITION CERTIFICATION FORM

EPA regulations require establishments that service or dispose of refrigeration or air conditioning equipment to certify by August 12, 1993 that they have acquired recovery or recycling devices that meet EPA standards for such devices. To certify that you have acquired equipment, please complete this form according to the instructions and mail it to the appropriate EPA Regional Office. **BOTH THE INSTRUCTIONS AND MAILING ADDRESSES CAN BE FOUND ON THE REVERSE SIDE OF THIS FORM.**

PART 1: ESTABLISHMENT INFORMATION

Name of Establishment: Stanton Energy Center
Street: 5100 S. Alafaya Trail
(Area Code) Telephone Number: (407) 658-6444
City: Orlando, State: FL. Zip Code: 32831
Number of Service Vehicles Based at Establishment: 1
County: Orange

PART 2: REGULATORY CLASSIFICATION

Identify the type of work performed by the establishment. Check all boxes that apply.

☒ Type A -Service small appliances
☒ Type B -Service refrigeration or air conditioning equipment other than small appliances
☐ Type C -Dispose of small appliances
☐ Type D -Dispose of refrigeration or air conditioning equipment other than small appliances

PART 3: DEVICE IDENTIFICATION

	Name of Device(s) Manufacturer	Model Number	Year	Serial Number (if any)	Check Box if Self-Contained
1.	ROBINAIR	17500B	92	03876	☑
2.	N.R.P.	LV8	92	107297	☑
3.					☐
4.					☐
5.					☐
6.					☐
7.					☐

PART 4: CERTIFICATION SIGNATURE

I certify that the establishment in Part 1 has acquired the refrigerant recovery or recycling device(s) listed in Part 2, that the establishment is complying with Section 608 regulations, and that the information given is true and correct.

Signature of Owner/Responsible Officer: Date: Name (Please Print): Title:

FSI 09

ALTERNATE METHODS OF OPERATION

Methods of Operation

I.	Primary Method of Operation:	Maximum of 4136 mmBtu/hr heat input to the boiler from the combustion of 100% bituminous coal with minor quantities of No. 6 oil utilized for ignitors and for flame stabilization.
II.	Alternate 1 Method of Operation:	Heat input from 4136 mmBtu/hr to a maximum of 4300 mmBtu/hr to the boiler from the combustion of 100% bituminous coal with minor quantities of No. 6 oil utilized for ignitors and for flame stabilization. When operating in this method of operation, emission limitations would be reduced by the ratio of increased heat input (ie. 4136/4300) so that the emission rate in lbs/hr would be identical to the emission rate of the primary method of operation.
III.	Alternate 2 Method of Operation:	Up to 30% of the bituminous coal from Primary or Alternate 1 Method of Operation is replaced by petroleum coke.
IV.	Alternate 3 Method of Operation:	Up to 30% of the bituminous coal from Primary or Alternate 1 Method of Operation is replaced by natural gas.
V.	Alternate 4 Method of Operation:	Up to 30% of the bituminous coal from Primary or Alternate 1 Method of Operation is replaced by landfill gas.
VI.	Alternate 5 Method of Operation:	Up to 10% of the fuel from any listed Method of Operation is replaced by on specification used oil.

APPENDIX B

COMPLIANCE CERTIFICATION

Compliance Certification (Hard-copy Required):

"I, the undersigned, am the responsible official as defined in Chapter 62-210.200, F.A.C., of the Title V source for which this report is being submitted. I hereby certify, based on information and belief formed after reasonable inquiry, that the statements made and data contained in the compliance report found in Appendix B are true, accurate, and complete."

4/11/97

Gregory A. DeMuth
Director
Environmental Division

Date

APPENDIX C

COMPLIANCE PLAN AND REPORT

COMPLIANCE REPORT and PLAN

EMISSIONS UNIT	IN COMPLIANCE	OUT OF COMPLIANCE
001 UNIT 1 BOILER	X	
002 AUXILIARY BOILER	X	
003 MATERIAL HANDLING	X	
004 WATER TREATMENT	X	
005 UNCONFINED EMISSIONS	X	
006 UNIT 2 BOILER	X	

APPENDIX D

ADDITIONAL REGULATIONS

EPA Rule	EPA Title	Facility Emission Unit Identification Number(s)	Applicable Requirement		Comments/Discussion	Potential Applicability
			Yes	No/NA		
[a]This list includes only those applicable requirements typically associated with an electric power plant. For example, NSPS Subpart O for sewage treatment plants has not been included. If rules other than those listed herein apply to your source, they should be included in your source's application even if they are not listed below. [b]Please refer to HGSS's June 6, 1995 memorandum explaining how this list was developed and how applicable requirements should be addressed in an application.						
Part 60 - EPA Regulations on Standards of Performance for New Stationary Sources						
Subpart A — General Provisions						
60.7	Notification and record keeping.	001,002	X			Unit
60.8	Performance tests.	001,002	X			Unit
60.11	Compliance with standards and maintenance requirements.	001,002	X			Unit
60.12	Circumvention.	001,002	X			Unit
60.13	Monitoring requirements.	001,002	X			Unit
60.19	General notifications and reporting requirements.	001,002	X			Unit
Subpart D — Standards of Performance for Fossil-Fuel Fired Steam Generators for Which Construction is Commenced After August 17, 1971						
60.42	Standard for particulate matter.					Unit
60.43	Standard for sulfur dioxide.					Unit
60.44	Standard for nitrogen oxides.					Unit
60.45	Emission and fuel monitoring.					Unit
60.46	Test methods and procedures.					Unit
Subpart Da — Standards of Performance for Electric Utility Steam Generating Units for Which Construction is Commenced After September 18, 1978						
60.42a	Standard for particulate matter.	001	X			Unit
60.43a	Standard for sulfur dioxide.	001	X			Unit
60.44a	Standard for nitrogen oxides.	001	X			Unit
60.45a	Commercial demonstration permit.	001	X			Unit
60.46a	Compliance provisions.	001	X			Unit

EPA Rule	EPA Title	Facility Emission Unit Identification Number(s)	Applicable Requirement		Comments/Discussion	Potential Applicability
			Yes	No/NA		
60.47a	Emission monitoring.	001	X			Unit
60.48a	Compliance determination procedures and methods.	001	X			Unit
60.49a	Reporting requirements.	001	X			Unit
Subpart Db — Standards of Performance for Industrial-Commercial-Institutional Steam Generating Units						
60.42b	Standard for sulfur dioxide.					Unit
60.43b	Standard for particulate matter.					Unit
60.44b	Standard for nitrogen oxides.					Unit
60.45b	Compliance and performance test methods and procedures for sulfur dioxide.					Unit
60.46b	Compliance and performance test methods and procedures for particulate matter and nitrogen oxides.					Unit
60.47b	Emission monitoring for sulfur dioxide.					Unit
60.48b	Emission monitoring for particulate matter and nitrogen oxides.					Unit
60.49b	Reporting and recordkeeping.					Unit
Subpart Dc — Standards of Performance for Small Industrial-Commercial-Institutional Steam Generating Units						
N60.42c	Standard for sulfur dioxide.					Unit
60.43c	Standard for particulate matter.					Unit
60.44c	Compliance and performance test methods and procedures for sulfur dioxide.					Unit
60.45c	Compliance and performance test methods and procedures for particulate matter.					Unit
60.46c	Emission monitoring for sulfur dioxide.					Unit
60.47c	Emission monitoring for particulate matter.					Unit
60.48c	Reporting and recordkeeping.					Unit

EPA Rule	EPA Title	Facility Emission Unit Identification Number(s)	Applicable Requirement		Comments/Discussion	Potential Applicability
			Yes	No/NA		
Subpart K — Standards of Performance for Storage Vessels for Petroleum Liquids for Which Construction, Reconstruction, or Modification Commenced After June 11, 1973, and Prior to May 19, 1978						
60.112	Standard for volatile organic compounds (VOC).					Unit
60.113	Monitoring of operations.					Unit
Subpart Ka — Standards of Performance for Storage Vessels for Petroleum Liquids for Which Construction, Reconstruction, or Modification Commenced After May 18, 1978, and Prior to July 23, 1984						
60.112a	Standard for volatile organic compounds (VOC).					Unit
60.113a	Testing and procedures.					Unit
60.114a	Alternative means of emission limitations.					Unit
60.115a	Monitoring of operations.					Unit
Subpart Kb — Standards of Performance for Volatile Organic Liquid Storage Vessels (Including Petroleum Liquid Storage Vessels) for Which Construction, Reconstruction, or Modification Commenced After July 23, 1984						
60.112b	Standard for volatile organic compounds (VOC).					Unit
60.113b	Testing and procedures.					Unit
60.114b	Alternative means of emission limitations.					Unit
60.115b	Recordkeeping and reporting requirements.					Unit
60.116b	Monitoring of operations.					Unit
Subpart Y — Standards of Performance for Coal Preparation Plants						
60.252	Standard for particulate matter.					Unit
60.253	Monitoring of operations.					Unit
60.254	Test methods and procedures.					Unit
Subpart GG — Standards of Performance for Stationary Gas Turbines						
60.332	Standard for nitrogen oxides.					Unit

EPA Rule	EPA Title	Facility Emission Unit Identification Number(s)	Applicable Requirement		Comments/Discussion	Potential Applicability
			Yes	No/NA		
60.333	Standard for sulfur dioxide.					Unit
60.334	Monitoring of operations.					Unit
60.335	Test methods and procedures.					Unit
Subpart OOO — Standards of Performance for Nonmetallic Mineral Processing Plants						
60.672	Standard for Particulate Matter.					Unit
60.674	Monitoring of Operations.					Unit
60.676	Reporting and Recordkeeping.					Unit
Part 61 - EPA Regulations on National Emission Standards for Hazardous Air Pollutants						
Subpart A — General Provisions						
61.05	Prohibited Activities.					
61.09	Notification of Startup.					
61.10	Source Reporting and Request for Waiver of Compliance.					
61.11	Waiver of Compliance.					
61.12	Compliance with Standards and Maintenance Requirements.					
61.13	Emission Tests and Waiver of Emission Tests.					
61.14	Monitoring Requirements.					
61.19	Circumvention.					
Subpart M — National Emission Standards for Asbestos			X			Facility
Appendix C to Part 61 — Quality Assurance Procedures						Facility
Part 63 - EPA Regulations on National Emission Standards for Hazardous Air Pollutants for Source Categories						
Subpart A — General Provisions						
63.4	Prohibited Activities and Circumvention.					Unit

EPA Rule	EPA Title	Facility Emission Unit Identification Number(s)	Applicable Requirement		Comments/Discussion	Potential Applicability
			Yes	No/NA		
63.6	Compliance with Standards and Maintenance Requirements.					Unit
63.7	Performance Testing Requirements.					Unit
63.8	Monitoring Requirements.					Unit
63.9	Notification Requirements.					Unit
63.10	Reporting and Recordkeeping Requirements.					Unit
63.11	Control Device Requirements.					Unit
Subpart Q — National Emission Standards for Industrial Process Cooling Towers						
63.402	Standard.					Unit
63.403	Compliance Dates.					Unit
63.404	Compliance Demonstrations.					Unit
63.405	Notification Requirements.					Unit
63.406	Recordkeeping and Reporting Requirements.					Unit
Subpart T — National Emission Standards for Halogenated Solvent Cleaning						
63.462	Batch Cold Cleaning Machine Standards.					Unit
63.463	Batch Vapor and In-Line Cleaning Machine Standards.					Unit
63.464	Alternative Standards.					Unit
63.465	Test Methods.					Unit
63.466	Monitoring Procedures.					Unit
63.467	Recordkeeping Requirements.					Unit
63.468	Reporting Requirements.					Unit
Part 72 - EPA Acid Rain Program Permits						
Subpart A — General Provisions						

EPA Rule	EPA Title	Facility Emission Unit Identification Number(s)	Applicable Requirement		Comments/Discussion	Potential Applicability
			Yes	No/NA		
72.7	New Units Exemption.		X			Unit
72.8	Retired Units Exemption.		X			Unit
72.9	Standard Requirements.		X			Unit
Subpart B — Designated Representative						
72.20	Authorization and Responsibilities of the Designated Representative		X			Unit
72.21	Submissions.		X			Unit
72.22	Alternate Designated Representative.		X			Unit
72.23	Changing the Designated Representative, Alternate Designated Representative; Changes in the Owners and Operators.		X			Unit
Subpart C — Acid Rain Applications						
72.30	Requirements to Apply.	001	X			Unit
72.32	Permit Applications Shield and Binding Effect of Permit Application.		X			Unit
72.33	Identification of Dispatch System.		X			Unit
Subpart D — Acid Rain Compliance Plan and Compliance Options						
72.40	General.					Unit
72.41	Phase I Substitution Plans.					Unit
72.42	Phase I Extension Plans.					Unit
72.43	Phase I Reduced Utilization Plans.					Unit
72.44	Phase II Repowering Extensions.					Unit
Subpart E — Acid Rain Permit Contents						
72.51	Permit Shield.		X			Unit
Subpart I - Compliance Certification						

EPA Rule	EPA Title	Facility Emission Unit Identification Number(s)	Applicable Requirement		Comments/Discussion	Potential Applicability
			Yes	No/NA		
72.90	Annual Compliance Certification Report.		X			Unit
72.91	Phase I Unit Adjusted Utilization.		X			Unit
72.92	Phase I Unit Allowance Surrender.		X			Unit
72.93	Units with Phase I Extension Plans.		X			Unit
72.94	Units with Repowering Extension Plans.		X			Unit
Part 73 - EPA Acid Rain Program Sulfur Dioxide Allowance System						
Subpart C — Allowance Tracking System						
73.35	Compliance.	001	X			Unit
Part 75 - EPA Acid Rain Program For Continuous Emission Monitoring						
Subpart A — General						
75.4	Compliance Dates.	001	X			Unit
75.5	Prohibitions.	001	X			Unit
Subpart B — Monitoring Provisions						
75.10	General Operating Requirements.	001	X			Unit
75.11	Specific Provisions for Monitoring SO_2 Emissions (SO_2 and Flow Monitors).	001	X			Unit
75.12	Specific Provisions for Monitoring NO_x Emissions (NO_x and Diluent Gas Monitors).	001	X			Unit
75.13	Specific Provisions for Monitoring CO_2 Emissions.	001	X			Unit
75.14	Specific Provisions for Monitoring Opacity.	001	X			Unit
75.15	Specific Provisions for Monitoring SO_2 Emissions Removal by Qualifying Phase I Technology.					Unit

EPA Rule	EPA Title	Facility Emission Unit Identification Number(s)	Applicable Requirement		Comments/Discussion	Potential Applicability
			Yes	No/NA		
75.16	Specific Provisions for Monitoring Emissions from Common, By-Pass, and Multiple Stacks for SO_2 Emissions and Heat Input Determinations.					Unit
75.17	Specific Provisions for Monitoring Emissions from Common, By-Pass, and Multiple Stacks for NO_x Emission Rate.					Unit
75.18	Specific Provisions for Monitoring Emissions from Common, By-Pass, and Multiple Stacks for Opacity.					Unit
Subpart C — Operation and Maintenance Requirements						
75.20	Certification and Recertification Procedures.	001	X			Unit
75.21	Quality Assurance and Quality Control Requirements.	001	X			Unit
75.22	Reference Test Methods.	001	X			Unit
75.24	Out-of-Control Periods.	001	X			Unit
Subpart D — Missing Data Substitution Procedures						
75.30	General Provisions.	001	X			Unit
75.31	Initial Missing Data Procedures.	001	X			Unit
75.32	Determination of Monitor Data Availability for Standard Missing Data Procedures.	001	X			Unit
75.33	Standard Missing Data Procedures.	001	X			Unit
75.34	Units with Add-On Emission Controls.	001	X			Unit
Subpart E — Alternative Monitoring Systems						
75.40	General Demonstration Requirements.					Unit
75.41	Precision Criteria.					Unit
75.42	Reliability Criteria.					Unit
75.43	Accessibility Criteria.					Unit

EPA Rule	EPA Title	Facility Emission Unit Identification Number(s)	Applicable Requirement		Comments/Discussion	Potential Applicability
			Yes	No/NA		
75.44	Timeliness Criteria.					Unit
75.45	Daily Quality Assurance Criteria.					Unit
75.46	Missing Data Substitution Criteria.					Unit
75.47	Criteria for a Class of Affected Units.					Unit
75.48	Petition for an Alternative Monitoring System.					Unit
Subpart F — Recordkeeping Requirements						
75.50	General Recordkeeping Provisions.	001	X			Unit
75.51	General Recordkeeping Provisions for Specific Situations.	001	X			Unit
75.52	Certification, Quality Assurance, and Quality Control Record Provisions.	001	X			Unit
75.53	Monitoring Plan.	001	X			Unit
Subpart G — Reporting Requirements						
75.60	General Provisions.	001	X			Unit
75.61	Notification of Certification and Recertification Test Dates.	001	X			Unit
75.62	Monitoring Plan.	001	X			Unit
75.63	Certification or Recertification Applications.	001	X			Unit
75.64	Quarterly Reports.	001	X			Unit
75.65	Opacity Reports.	001	X			Unit
Appendix A to Part 75 — Specifications and Test Procedures		001	X			Unit
Appendix B to Part 75 — Quality Assurance and Quality Control Procedures		001	X			Unit
Appendix C to Part 75 — Missing Data Statistical Estimation Procedures		001	X			Unit

EPA Rule	EPA Title	Facility Emission Unit Identification Number(s)	Applicable Requirement		Comments/Discussion	Potential Applicability
			Yes	No/NA		
Appendix D to Part 75 — Optional SO_2 Emissions Data Protocol for Gas-Fired Units and Oil-Fired Units						Unit
Appendix E to Part 75 — Optional NO_x Emissions Estimation Protocol for Gas-Fired Peaking Units and Oil-Fired Peaking Units						Unit
EPA Part 76 - Acid Rain Nitrogen Oxides Emission Reduction Program						
76.5	NO_x Emission Limitations for Group 1 Boilers.					Unit
76.8	Early Election for Group 1, Phase II Boilers.	001	X			Unit
76.9	Permit Applications and Compliance Plans.	001	X			Unit
76.10	Alternative Emission Limitations.	001	X			Unit
76.11	Emissions Averaging.	001	X			Unit
76.12	Phase I NO_x Compliance Extensions.	001	X			Unit
76.14	Monitoring, Recordkeeping, and Reporting.	001	X			Unit
76.15	Test Methods and Procedures.	001	X			Unit
EPA Part 82 - Protection Of Stratospheric Ozone						
Subpart B - Servicing of Motor Vehicle Air Conditioners						
82.34	Prohibitions.	001	X			Facility
82.36	Approved refrigerant recycling equipment.	001	X			Facility
82.38	Approved independent standards testing organizations.	001	X			Facility
82.40	Technician training and certification.	001	X			Facility
82.42	Certification, recordkeeping and public notification requirements.	001	X			Facility
Subpart F - Recycling and Emissions Reduction						
82.154	Prohibitions.		X			Facility

EPA Rule	EPA Title	Facility Emission Unit Identification Number(s)	Applicable Requirement		Comments/Discussion	Potential Applicability
			Yes	No/NA		
82.156	Required practice.		X			Facility
82.158	Standards for recycling and recovery equipment.		X			Facility
82.160	Approved equipment testing organizations.		X			Facility
82.161	Technician certification.		X			Facility
82.162	Certification by owners of recovery and recycling equipment.		X			Facility
82.164	Reclaimer certification.		X			Facility
82.166(k)	Reporting and recordkeeping requirements for owners/operators.		X			Facility

APPENDIX E

CONTROL EQUIPMENT

II. GENERAL DESCRIPTION

ORLANDO UTILITIES COMMISSION

Stanton Energy Center Unit 1
Particulate Removal Equipment
Precipitator and Auxiliaries

The electrostatic precipitators consist of four (4) major components:

Discharge System
Collecting System
Gas Distribution System
Casing

In addition, the following auxiliaries are also provided:

Electrical Equipment
Key Interlock System
Roof Girder Blower System

1.1 Discharge System

The function of the discharge system is to cause an ionization to occur within the gas passing through the precipitator. The ionization creates a negative charge on the particulate within the gas stream.

The discharge system consists of pipe frames which support the discharge electrodes. These frames ensure that no electrode will have an unsupported length longer than five (5) feet.

The pipe frames are in turn supported at each side by a discharge system support frame. The discharge system support frame ensures that the pipe frames are properly positioned within each gas passage.

The discharge system support frame is in turn supported at two (2) points by installing a suspension pipe between the frame and a support insulator which is located within the box girder.

Since in normal operation a certain amount of particulate can be expected to collect on the discharge frames and electrodes, each frame is individually hit by a swinging hammer. The magnitude of this impact can be adjusted at the cam release mechanism which is located above the box girder.

1.2 Collecting System

The function of the collecting system is to collect negatively charged particles within the gas stream on a grounded surface.

The collecting system consists of formed 18-gauge steel strips. These strips interlock together to form a gas passage that is 18'-3/4" wide x 46'-5-1/2" high. The forming operation gives the strips their necessary stiffness and produces vertical pockets which create quiescent zones within the gas stream. This zone allows the particulate that is loosened from the plates by rapping, to fall directly into the hopper without re-entering the gas stream.

The rapping system consists of a shaft and hammers that span the width of the precipitator. A motor and gear reducer located outside the casing rotates the shaft. As it rotates, each hammer is free to swing and hit an anvil at the end of the rapper bar. This bar is attached to the bottom of the collecting strips. Each hammer is mounted individually in a designated position to minimize the number of collecting strips which are rapped at any one time.

1.3 Gas Distribution System

The purpose of the gas distribution system is to distribute gas uniformly throughout the cross-section of the precipitator. This is to ensure that the discharge and collecting systems are unformly loaded in removing the particulate matter from the gas stream. The system is also designed to prevent re-entrainment of dust that is collected in the hoppers.

The gas distribution system consists of three perforated gas distribution plates and a air straightening grid located in the inlet nozzle. Vertical baffles are located in the outlet nozzle. The perforated plates and vertical baffles utilize the principle of resistance to flow to produce a uniform gas distribution. In addition, the air straightening grid produces horizontal flow into the precipitator. The distribution system is rapped in a manner similar to that used for rapping the collecting system. This is done to dislodge any particulate which would cling to the distribution plate and cause a disruption in the normal flow of gas through the precipitator. Since the vertical baffles are located on the "clean" side of the precipitator, no rapping is required.

1.4 Casing

The function of the precipitator casing is to form a gas tight container which supports the three other major components to the precipitator.

The gas tight roof for the precipitator casing is supported on beams which also support the collecting strips. These beams are framed into box girders which span in a perpendicular direction from gas flow. The box girder inside dimensions permit access to the insulators supporting the discharge system.

Above the box girders and the gas tight roof, a separate weather enclosure building is installed. The building protects the insulation across the gas tight building and working area for maintenance and removal of transformer rectifiers and substation transformers.

c) For other routine restarts, the air-load test should be conducted in Manual and Automatic control modes with little, if any, adjustments necessary to the controls.

d) Power readings should be at or near those attained during the <u>initial</u> air-load test, if not, purge the casing with F.D. and I.D. fan(s) and retest.

2.0 PRECIPITATOR SYSTEM START-UP

The system can be started after the precipitator and auxiliary equipment have been checked and adjusted for proper operation.

Cold Start-Up Procedures

The electrostatic precipitators should <u>not</u> be in service during the initial stages of boiler start-up due to the potential explosion hazards. Prolonged operation at a temperature below that of the acid dew point may result in the formation of sticky deposits which will adversely affect future performance. However, if regulatory authorities require the stack discharge be controlled during all phases of operation, the Wheelabrator-Lurgi precipitators can be started up once the operator is sure that boiler ignition has been attained and that stable conditions exist.

The following procedure should be utilized during precipitator start-up:

2.1 Turn on the insulator heaters. These should be on a minimum of two (2) hours prior to start-up of the precipitator.

2.2 Turn on the hopper heating system. This system should remain on except for maintenance or long outages.

2.3 Turn on the material handling system (furnished by others).

2.4 Turn on the precipitator CS, DS and GDS rapping systems and operate in a continuous mode, thus manual setting of control.

NOTE: The precipitator can be <u>ENERGIZED</u> at this time. This does not mean the precipitator must be energized. The plant operators should incorporate this function into this overall system operation.

2.5 Energize the first field in a manual mode at low level just enough to stay within the stack emission limitation. This will prevent excessive fouling of the precipitator internals.

2.6 Additional fields can be energized as gas volume and dust load increase.

2.7 The precipitator can be completely energized and switched to automatic operation once the gas temperature at E/P outlet reaches 300°F and burning has been stabilized.

CAUTION: Prolonged operation below 300°F may cause premature corrosion of the precipitator internals.

Each box girder is supported at each end by a pair of columns. On the exterior walls a stiffened steel plate is installed between these pairs of columns, which forms part of the gas tight container. The columns in turn carry the load from the roof girder and stiffened plate down to the precipitator base frame.

The bottom of the precipitator is composed of pyramidal hoppers which are used to collect the dust. As an integral part of the hopper design, a girder section is designed to carry vertical loads from the hoppers to the base framing and to the interior hopper support columns. These girders also tie the walls together across the bottom of the precipitator.

The base framing consists of girders running parallel to gas flow. These girders receive the loads from the columns supporting the box girders and the girders which are part of the hopper system. Also as part of the base framing, girders are located at the inlet and outlet end of the precipitators. This base framing system is designed to transfer the loads from the precipitator to the supporting structure located below the precipitator.

1.5 Electrical Equipment

The electrical equipment is provided to energize and control the discharge system and control the various rapping and heating systems.

All equipment is furnished in accordance with pertinent ASA, AIEE, and NEMA standards as well as the National Electrical Code. The precipitator control cubicles are self-contained units with 120 volt control circuits. Terminal boards for outgoing connections are provided. Circuit breakers, magnetic and thermal overcurrent protective devices are included. Power to the precipitator is controlled automatically by means of spark sensitive transistorized circuit which transmits a signal to magnetic amplifier which in turn controls the thyristors in the primary circuit of the transformer-rectifier. If maximum daily ambient is not in excess of the 40°C, the control equipment shall be suitable for operation at full rated load.

The high voltage electrical set comprising of rectifier and transformer is liquid cooled, single phase and designed for a 45°C rise at rated load provided the maximum daily ambient shall not exceed 50°C.

The transformer rectifier is provided with a dial thermometer, magnetic liquid level gage, drain, low voltage junction box, liquid filled output bushing and grounding switch.

1.6 Key Interlock System

A key interlock system is provided to prevent access to the precipitator internals when high voltage is present.

INTRODUCTION

The C-E Flue Gas Desulfurization System (FGDS) furnished for Stanton Unit No. 1 is the equipment responsible for removing sulfur oxides from the flue gases leaving the steam generating unit and transferring the material removed to the customer's disposal system.

The major components of the system are the three SO_2 absorber modules with reaction tanks, pH sample holding tanks, and emergency quench tanks, the limestone additive prep. system, the effluent removal system, cleaning (washing) system, and system pumps. In addition to these are the auxiliary equipment, tanks, mixers, pumps, valves, and the component controls which all contribute to the operation of the system. (See schematic flow diagram drawing 09182-3E-2800). For additional system and equipment mechanical information see Volume 1, Tabs 1 thru 5.

Most of the equipment (pumps, mills, etc.) are arranged in sets. Each set of equipment has an installed spare that should be kept ready for operation. It is recommended that the equipment be alternated periodically to keep the lubrication film intact and provide even wear on all equipment in the set.

Manual isolation valves are provided for some equipment for maintenance purposes. When maintenance has been accomplished return these valves to the open position to permit start-up of the system. Position status lights are provided for some.

Manual drain valves are provided where required for freeze protection purposes. Before operating the equipment, make certain these valves are closed; there are no interlocks, alarms, or status lights.

Proper operation of the system requires absorber module gas inlet and outlet dampers, system bypass dampers, and other shutoff/isolation dampers to open and shut in proper sequence; control of solids in the process tanks and spray system; control of the additive feed rate; control of the water/slurry levels in the system tanks and the ability to clean up equipment in the gas flow path with minimum interruption of equipment availability.

All mechanical equipment associated with the modules should be inspected before attempting to start any of it. Equipment should be checked for proper lubrication periodically. Levels in the various tanks should be checked regularly. The seal water supply to the pumps should be established and maintained. The seal water connections to the equipment should be inspected prior to pump start-up and then again following each start-up to ensure that packing glands are not leaking excessively. It is recommended that a check list be prepared by the operating department to ensure that no equipment is overlooked.

It is the responsibility of the operating department to check and insure that all tanks are full to normal operating levels, mixers are operating, and that pumps, fans, damper and valve actuators, etc. and other items of equipment and processes which are not furnished by C-E but are associated with the system are available prior to and during unit start-up and operation.

Any equipment and/or processes not controlled from the FGDS or additive prep console boards must be started and operated from their respective control stations - such as control power, instrument air, makeup water, treated waste water, seal water, cooling water, and limestone supplies, etc.

SYSTEM GAS FLOW

A boiler start-up does not require any of the absorber modules to be in service. For start-up the absorber system will be on bypass, the bypass damper being interlocked to remain fully open. Only after one absorber has been placed in service will the operator be able to remove the bypass dampers from full open position. The entire system may be bypassed to the stack, maintaining the requirement of having a gas flow path to the stack at all times of operation.

Each of the two bypass ducts contains a double damper with seal air to provide tight shutoff when fully closed. The upstream stage of each is a louver type and is split into two sections. The top section is for shutoff, the bottom section is fully positionable. The downstream stage of each is a guillotine type for shutoff.

The two bypass ducts are capable of handling 100% of the boiler MCR gases, approximately 50% per duct. Once coal is being fired, the individual modules may be placed in service as required by unit gas flow loading and sulfur content of the flue gas. It will be up to the operator to determine the amount of gases to be directed through the system (up to maximum design gas flow), the number of modules in service, and the number of spray levels in service per absorber. The positionable sections of the two bypass dampers are capable of handling approximately 30% of MCR.

During normal operation, above 50% MCR and with two absorbers in service, the bypass dampers should be set with both downstream stages left fully open, both upstream shutoff sections (top) fully closed, and both positionable sections adjusted as required - based on SO_2 content and removal, outlet temperature at the stack, and system differential pressure.

The absorber module inlet and outlet dampers are interlocked such that once a flow path through the modules has been established, the bypass damper must be fully opened before the last module can be taken out of service. This will insure a gas path to the stack at all times.

Before the operator closes any gas path damper an alternate path should be confirmed.

In the event of a boiler master fuel trip the gas path should not be changed immediately thereafter until sufficient time has elapsed for the furnace pressure and air flow controls to return to equilibrium.

These instructions will present a recommended method of operation, based on the control logic and conditions prior to actual operation of the equipment. As operating experience is gained and equipment functions become more evident to the operator, it may be necessary to modify these methods of operation.

Before the individual modules are operated, check to be sure the entire system is ready for operation. Energize all electrical systems and instrument device supplies, be sure that the instrument air supply is available.

To operate the modules, see the following equipment description sections, the "System Operation" sections, the "Analog Control System" section, and the "Special Control Features" section of this set of operation and control instructions.

The system operation section is a general, fairly concise description of the various systems and the operating sequence, providing a good overview - whereas the other sections deal with specific details and operating instructions.

SYSTEM OPERATION

STARTUP

Operating conditions for the equipment is discussed in the previous sections of this instruction. Check all equipment that is to be operated. Determine that tank levels are satisfactory and that makeup water, seal water, cooling water, and raw limestone supplies are available and adequate. Then start selected recirc water pump and unit seal air fan. These supplies are required continuously for startup and operation. The reaction tank additive, effluent bleed, makeup/flush water, and wash water have to be ready to be placed into service once an absorber module is in operation.

When all equipment has been checked and is ready, the absorber modules may be placed in service. Putting an absorber into service consists of starting at least two absorber spray pumps and then opening the absorber's inlet and outlet isolation dampers. Although the absorber may operate temporarily with only one spray pump on after startup, at least two should be on at all times, and additional pump(s) will be required at higher loads in order to insure adequate SO_2 removal. Refer to sections "Absorber Gas Path Dampers" and "Absorber Spray Pumps".

Prior to opening the absorber inlet and outlet isolation dampers, the associated demister seal air fan must be placed in service to prevent flue gas leakage into the atmosphere through the absorber side wall penetration openings. The purge air fan must be off and the absorber vent (access door) closed before starting spray pumps.

After a spray pump has started, the pump motor current indicator should be checked to ascertain that operation is normal.

When at least two spray pumps are established in service, the associated absorber inlet and outlet isolation dampers are opened sequentially, admitting flue gas to the absorber module, and the remaining module functions, i.e., addition of additive slurry, operation of effluent bleed and introduction of make-up water will be automatically placed into or removed from service as required. Additional selector switches on the control boards allow the operator versatility for emergency situations or equipment malfunction.

The absorber additive line isolation valve will open when the absorber is placed in service (any two spray pumps on), establishing an auto permit for the absorber additive flow control valve to regulate the additive feed to the reaction tank.

As the reactions in the system progress, the solids concentration of the reaction tank slurry will increase. The effluent bleed system is placed in service to automatically control the reaction tank solids at approximately 13 percent. When the control system receives a high solids signal from the slurry density transmitter, the bleed valve is automatically opened.

The effluent bleed system is now in operation delivering slurry from the reaction tank to the waste slurry sump and is pumped from there to the thickener where water is removed and returned to the recirc water tank. The thickened slurry handling and disposal control is by others.

When the reaction tank density is no longer high the bleed valve automatically closes and a timed flush of the line is initiated (flush valve opens, flushes, and closes).

As the effluent bleed system removes solids from the reaction tanks, additive slurry and makeup water must be added to the tanks to sustain the process and maintain the reaction tanks at their normal operating level and pH. An alarm will sound if the reaction tank density, pH, or level goes too high or too low.

The level element in the reaction tank provides a signal to the level controller to automatically position the makeup water control valve to maintain an adequate slurry level in the tank. The makeup water is pumped from the recirculation water tank to the reaction tanks by one of two recirc water pumps. Recirc water is also used for the system flush water supply.

When placing the additive feed system in service, assure that an adequate level for pump suction exists in the tank. With the additive feed pump operating (slurry lines charged), the additive feed line will recirculate a portion of the additive slurry back to the additive storage tank. This will assure high enough velocities in the lines to prevent settling out of solids and possible pluggage.

The additive system is now ready to admit additive to the reaction tanks. The additive line isolation and control valve(s) for the absorber(s) in service will be opened, as mentioned previously, completing the additive flow path to the reaction tanks. The additive flow control valve station is released for auto operation when the isolation valve is open. The additive flow controller loop positions the additive flow control valve in response to reaction tank pH, which is indicative of SO_2 concentration in the incoming flue gas, the quantity of gas to be treated, and the removal rate required to obtain the proper outlet SO_2. Magnetic flow meters in the additive feed lines to the reaction tanks feed back additive flow rates to the controllers.

The remaining absorber module(s) are placed in service, as required, in a similar manner.

NORMAL OPERATION

The second absorber module should be placed in service soon after the first absorber in anticipation of increasing boiler load. It is expected that, in most cases, the boiler will be operated at or near rated load. The second module is placed in service in the same manner used for startup of the first module. The third module is expected to be used as a spare, but may be required when firing higher sulfur coals in the boiler if the EPA emission level maximum limit of 1.2 pounds SO_2 per million BTU heat input is being exceeded (due to insufficient available spray pumps for the two operating modules).

When one absorber is in service, the bypass dampers may be changed to the control mode. Move the inlet damper selector switches to "Close", which will close the isolation (top) section of the upstream stages. Next slowly and alternately push/release the "Jog Close" pushbuttons, closing the control (bottom) sections, until outlet SO_2 is reduced to the required value.

Once the bypass dampers have been put in the control mode, most of the flue gas flows through the modules, with the remainder going through the positionable control sections of the bypass dampers,. which will limit the amount of flue gas bypassed in proportion to the SO_2 in the flue gas entering the absorbers. As the SO_2 in the entering flue gas increases, the bypass dampers should be closed more to direct more flue gas through the absorbers to maintain the stack emission below the EPA limits (see "Bypass Damper Control" section under "Analog Controls"). They may also be positioned to control system differential pressure or outlet temperature (stack plume/condensate) if required.

With absorber modules in operation and all associated equipment in service and the bypass dampers in control mode, flue gas is flowing through the absorbers with the slurry sprays contacting and removing the SO_2 from the gases. The treated gases leave the absorbers and are mixed with any bypassed flue gas, before the mixture is sent out the stack.

This process reduces the flue gas temperature considerably. To prevent a stack plume from forming and to prevent corrosion in the downstream ductwork or stack, the flue gas exiting the system outlet duct may be reheated to a temperature above the dew point by increasing the amount of bypass, provided SO_2 removal rate permits.

As the flue gases are treated by the sprays inside the absorbers, the reaction tank solids are increased. If the solids concentration in the slurry is not bled off (kept under control) then the slurry concentration will increase continually and eventually start causing pluggage and erosion problems. pH will reach equilibrium - inhibiting further SO_2 removal and causing scaling problems.

The effluent bleed system controls the solids concentration in the reaction tank. When the reaction tank density reaches the high percent solids set point (14%), the effluent bleed isolation valve is automatically opened. This will lower the reaction tank level which means make-up water and additive has to be added to maintain the reaction tank level.

When the reaction tank density is reduced to the low percent solids set point (12%), the effluent bleed isolation valve will be closed, and a timed flush of the system will be initiated with water through to the waste slurry sump. The bleed valve will remain closed until the slurry density is again high.

All equipment associated with the limestone preparation system should be mechanically checked and kept ready for operation. Check oil levels of all rotating equipment. It is recommended that a check list be prepared by the operating department to ensure that no equipment is overlooked.

The additive mill process flow is as follows:

Limestone enters the milling system through the weigh feeder and combines with grinding water at the mill inlet. The slurry mixture is ground in the rotating ball mill before flowing from the mill into the mill slurry sump. Dilution water is added at the sump to obtain the required density. The slurry is pumped from the sump to the cyclone classifiers by the mill circuit pump. In the classifier the oversize limestone particles are separated from the finished slurry and are returned thru the distributor to the mill for further grinding. The finished slurry flows thru the distributor to the additive storage tank.

As the absorbers continue operating, it will be necessary to replenish the additive supply. As the additive storage tank empties, an alarm will sound when the tank level is low and the additive milling system must be placed in service to refill the additive storage tank. Mill startup is operator initiated, either automatically or manually. See "Additive Preparation Milling Systems" section for further information.

When an additive mill system automatic start sequence is initiated, the mill drive motor will start first. When the motor has started, the duplex lubricating/hydrostatic (high lift) pumps will start. When the high lift pumps have built up enough pressure to raise the mill barrel off the bearings, the mill clutch will engage to turn the mill barrel. At this time the gear lube system is also energized to provide lubrication to the drive gear.

With the mill running (clutch engaged), grinding water is supplied to the mill inlet. The limestone feeder starts 30 seconds later. The ground limestone and water slurry mixture from the mill is collected in the mill slurry sump. The 54% limestone slurry leaving the mill is reduced to about 35% solids by the addition of dilution water to the additive mill sump. When a sufficient sump level is attained, the mill circuit pump will start. With the circuit pump operating, additive slurry will flow via the cyclone classifiers to the additive storage tank. Once the additive storage tank is full an alarm will sound (high level) and the milling system will automatically shut down (if still in auto).

During mill operation, meters on the control panel board give a visual indication of equipment operation. These include grinding water ratio, sump slurry density, storage silo level, mill motor amps, grinding water flow, total feed, elapsed operating time, feed rate, additive storage tank level, and agitator motor amps.

During milling system normal operation, if the mill slurry sump reaches a hi-hi level an alarm will sound, and the feeder and grinding water flow will stop, but the mill will continue to run. When the sump level drops below the hi-hi level the feeder and grinding water flow will resume again.

If the slurry sump level drops to a low level, the system will go into a recycle mode, causing the slurry to recycle back to the mill sump (no product flow). If the slurry in the sump drops to a lo/lo level, an alarm will sound and the mill circuit pump is shut down so the pump doesn't cavitate and lose suction. When the sump level becomes high, the system will return to the normal mode.

When the additive storage tank reaches the high level (tank full), it initiates an auto stop command to the milling system, stopping the limestone feed. The mill will continue to run for 30 minutes to allow time to cool, flush, and dilute the mill contents, after which the mill clutch is dis-engaged - stopping the gear lube system and the grinding water. Next an auto circuit flush from the sump to the distributor is initiated for 18 minutes. When the entire system flush is complete, the sump is drained and the circuit pump is shut down and back flushed. The mill motor and mill lube pumps are stopped manually at the operator's discretion.

With the absorbers in service, additive must be fed to the reaction tanks at a sufficient rate to provide adequate SO_2 removal. The additive feed pump is put into service by the operator. Additive flow is measured by a flow meter and indicated on the absorber control board.

The pH in the reaction tanks is also affected by the SO_2 being absorbed from the flue gases. It is expected that during normal operation the pH in the reaction tank will stabilize at about 6.0 pH as limestone is added to the tank and SO_2 is removed from the flue gas.

Reaction tank pH is measured and then recorded on the Absorber control board. The additive flow rate is automatically controlled by a set point proportional to reaction tank pH, which is a resultant of boiler load, number of absorbers in service, and SO_2 concentration at the system inlet duct.

When firing high sulfur coals at high loads, it may be necessary to run the additive milling system continuously to maintain an adequate supply of additive in the storage tank to meet the demand of the reaction tanks and maintain proper pH.

During absorber operation, a mudlike residue continually builds up on the mist eliminator vanes. This must be periodically removed to insure proper gas passage through the system and proper operation of the mist eliminators. The vanes are cleaned by the demister washers. These consist of traversing and rotating lances which spray high pressure water onto the vanes. The vanes must be washed at least once every 24 hour period. Because of system capacity, only one washer lance may be operated at a time. See "Demister Wash System" section.

Spray line header pressure for each pump is monitored to warn the operator of impending pluggage in the spray lines or nozzles. If the pressure is high or low, an alarm will sound. If it is low for more than 30 seconds, the pump will be tripped.

As long as there is any spray pump in service in an absorber module, the module can remain in service. There should be at least two spray pumps in service however, to insure adequate treatment of the gas and cooling of the module internals. High temperatures may damage seals, expansion joints, mist eliminators, fiberglass spray headers, gaskets, etc.

Should temperature in any absorber module become high, an absorber shutdown is initiated and an emergency quench valve will automatically open to admit water to the gas stream entering the absorber (Refer to "Emergency Quench Tank" section). This will reduce the module temperature to protect heat sensitive parts of the absorber. A quench will be initiated for any absorber trip.

The liquid level in the reaction tank makes a seal with the open bottom of the absorber modules. This seal is essential at all times while the system is operating. If the seal is broken (low reaction tank level condition), untreated gases would issue forth from this opening to the atmosphere. The absorber module will be shut down and the bleed system for the module will be shut off until the condition is corrected.

ABSORBER MODULE NORMAL SHUTDOWN

If boiler load is reduced or if the sulfur content of the coal being fired is reduced, the volume of gas flow decreases and/or less SO_2 is being generated, and one absorber module may be taken out of service when not required. It is not usually necessary to remove a module from service, as the absorbers are designed to operate at a wide load range - independent of gas velocity. However, to conserve both energy and equipment an absorber module can be taken out of service if the EPA standards (1.2 lbs/10^6 Btu) can be met with only one absorber in service. Any load that the absorber was carrying must be able to be picked up by the remaining module in service, and an assured gas path must be maintained.

Turning the absorber module auto Stop/Start selector switch to "Stop" will initiate an absorber module auto shutdown sequence, during which the following will occur:

The absorber outlet and inlet double isolation dampers will close sequentially. When the dampers are closed, the spray pumps will be shut down in reverse sequence, which will close the additive feed line isolation valve and flush. An absorber wash required signal will start the wash pump. When the pump is on, a demister wash cycle will be initiated. When the wash cycle is completed, the wash pump will stop and shutdown is complete.

Whenever there is slurry in the reaction tanks, the tank agitators should be kept in service to prevent solids from settling out. The agitators will be tripped if the level drops below their impellers.

When the absorber module inlet and outlet isolation dampers are closed, the chemical reactions in the reaction tank will ultimately reach equilibrium and the solids content will not increase. Thereafter the bleed line isolation valve will remain closed while out of service.

EMERGENCY SHUTDOWN

During any trip or emergency equipment shutdown, the primary objective is to maintain a gas path to the stack, either through the modules or through the bypass duct. Operation of the absorber modules will be affected in some way by various trip conditions.

An emergency trip will fully open the bypass dampers, and will initiate a shutdown for all absorbers in operation. An emergency trip will result from any of the following conditions:

A. Boiler Air Preheater failure.
B. Loss of all 6900V bus.
C. Loss of all 6900V feed (spray pumps).
D. System seal water off for more than 30 seconds.

For additional information see "Emergency Trip Conditions" section.

A boiler trip does not trip any of the absorbers in service. Therefore, if the boiler will be restarted in a short period of time, the absorber system will still be in service saving some restart time. However, on a boiler trip fuel is no longer being burned, therefore no SO_2 is being formed. Since there is no SO_2 to be absorbed, additive is no longer needed for chemical reaction. Therefore, if the boiler will be down for a longer period of time, then the modules may be shut down by the operator in an orderly manner.

In the event of a boiler master fuel trip, the FGDS gas path should not be changed immediately thereafter until sufficient time has elapsed for the furnace pressure and air flow controls to return to equilibrium.

In the event of an absorber trip, the gas flow must be taken over by the remaining operating absorbers, or be transferred through the system bypass. As SO_2 emissions may not be meeting standards, the spare absorber may have to be placed in service or else load may have to be reduced and utilize only the remaining absorber modules. An absorber trip will be initiated by loss of all spray pumps (caused by loss of seal water or low flow, or 6900V undervoltage) by reaction tank level lo-lo (skirt uncovered), by absorber inlet or outlet temperature high, or by an emergency trip.

NOELL

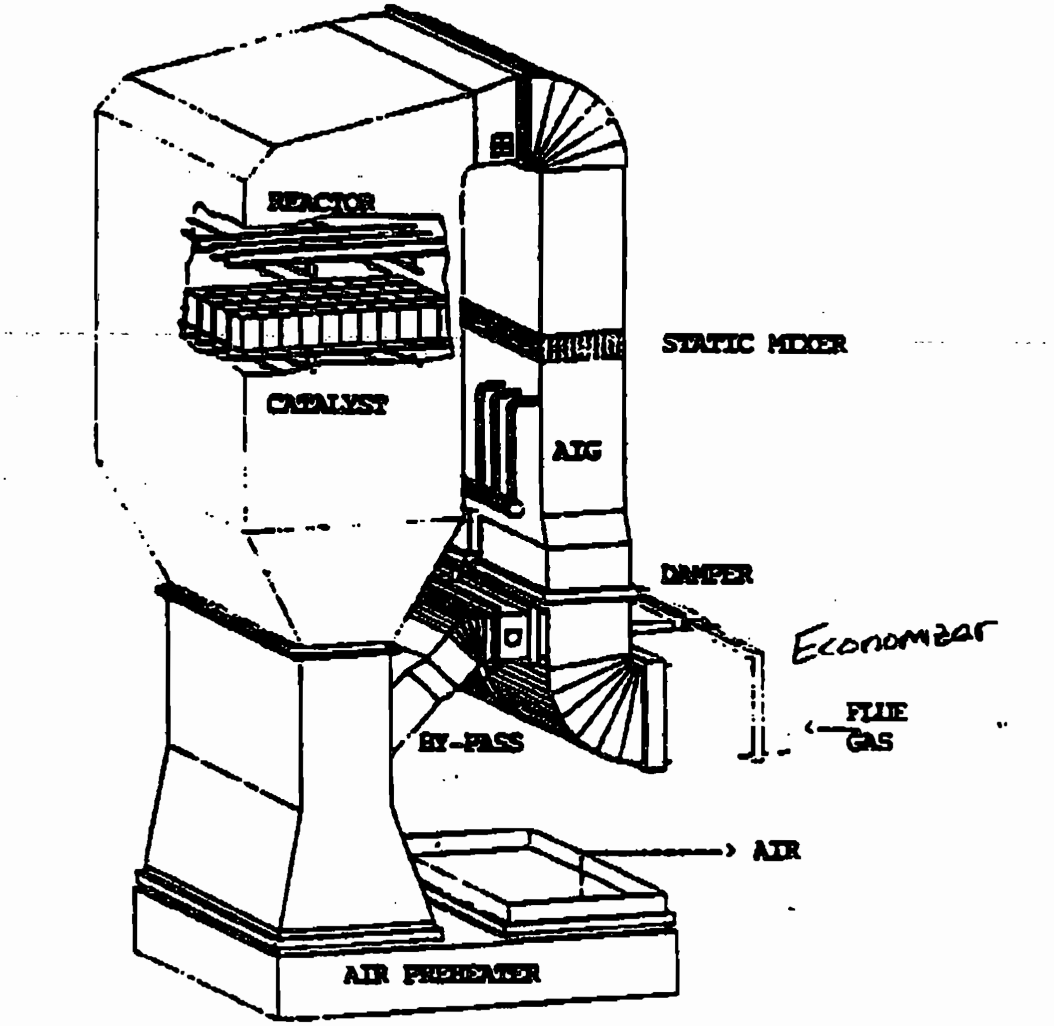

Figure 1: SCR System for Stanton Energy Center Unit 2 in Orlando,
Florida.
Unit Capacity: 415MW
Fuel: Coal

1.2 Selective Catalytic Reduction System

The Selective Catalytic Reduction system (SCR) is designed and supplied, by Noell Inc., to remove nitrogen oxides (NO and NO_2) from the flue gas before it emits into atmosphere. This is a typical "conventional" high dust, hot-end SCR system installed between the economizer and air preheaters. The design and operation of the SCR system conform to the following requirements:

- The SCR system is designed for 47% DeNOx and 2 ppm ammonia slip under three year guarantee.
- The SCR system places no primary constraints on the boiler operation. It can be independently start up and shut down during the boiler operation.
- Daily start-up and shutdown of the SCR system are allowed with a restraint of three times maximum cold start-up per each year.

The major components of the SCR system include anhydrous ammonia unloading, storage and supply, ammonia flow control and injection, catalyst reactor, and the control system supplied by others.

The anhydrous ammonia storage unloading and supply sub-system consist of two compressors, two 30,000 gallon storage tanks and two ammonia vaporizers. The vapor pressure of the anhydrous ammonia is maintained above 45 PSIG, corresponding to an ammonia vapor temperature 30 °F, so that the ammonia flow can be controlled properly.

The flow control/injection consists of flow control valves, blowers and an injection grid. The blowers withdraw a constant amount of hot air from the air preheater. Metered amounts of ammonia vapor are injected immediately upstream of the ammonia premixer that is located downstream of the blowers. The ammonia vapor and the hot dilution air supplied by the blowers are thoroughly mixed by the ammonia premixer. The ammonia/dilution air mixture is introduced into the duct through an injection grid located in front of SCR reactor. The ammonia injection grid is designed and positioned upstream of a static mixer to allow the ammonia to be thoroughly distributed across the flue gas stream before entering the catalyst bed.

The catalyst reactor is located between the economizer and air preheater to provide the sites for the NO_x removal reactions to occur. Sootblowers are provided to blow off deposition from the catalyst surface.

The SCR system is controlled by the plant Distributed Control System (DCS). The DCS system takes SCR system's field I/O, perform the control logic, data acquisition and calculation, and determine the conditions under which ammonia should be injected and the amount of ammonia to be injected. The DCS also monitors the SCR system performance and interfaces with the power plant operation.

NOELL, INC
An Enterprise of Preussag

PROJECT: ORLANDO POWER COMPANY
REF. NO.: •
BY: WCS CHK'D:
SUBJECT: SCHEMA
DATE: 12/18/95

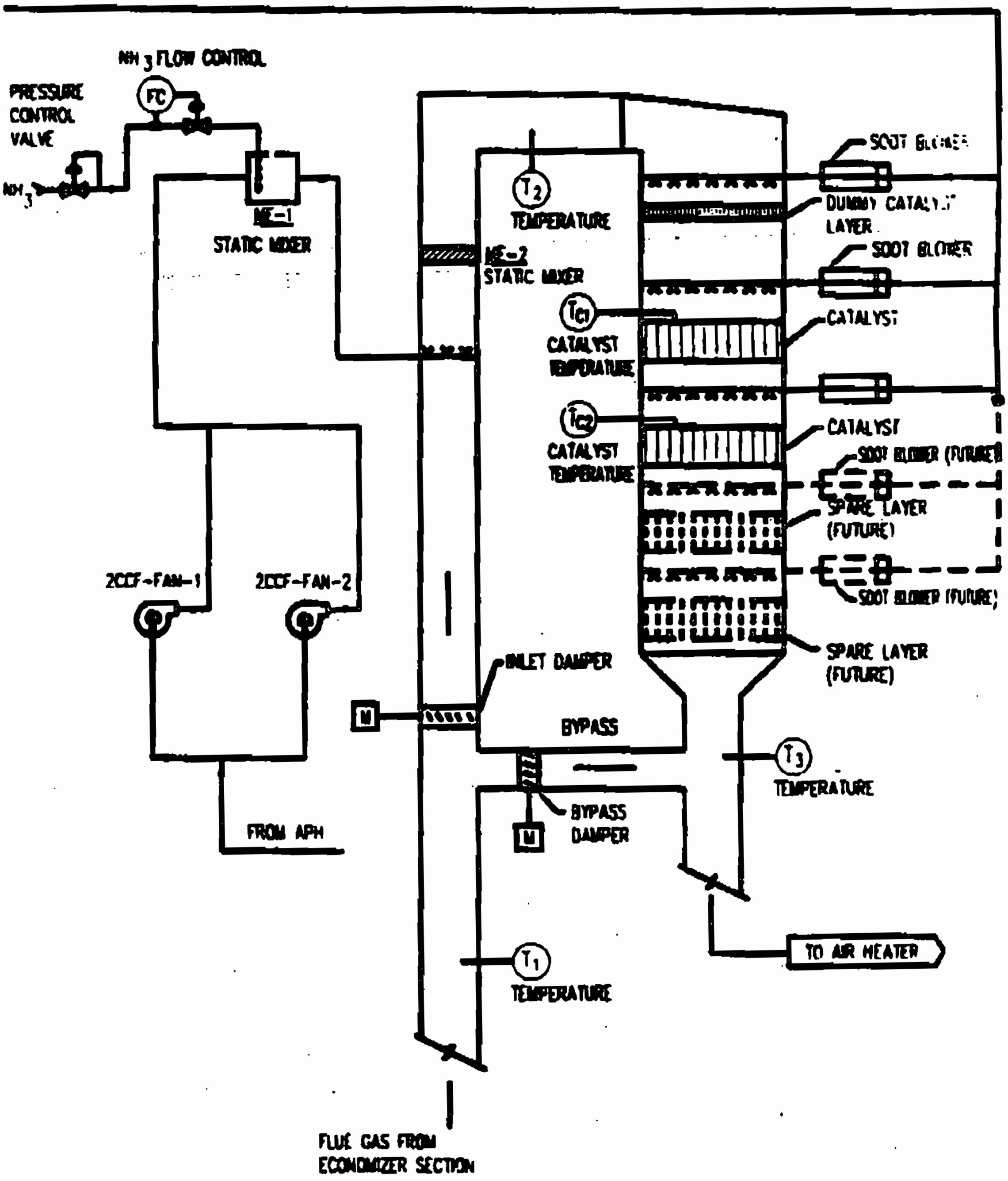

REACTOR SIDE ELEVATION

AUTOCAD NO.= ORB11-E3.DWG

1.3 Process Chemistry

The SCR system removes NO_x (NO and NO_2) through a selective catalytic reduction process. This is a heterogeneous catalytic process. Anhydrous ammonia (NH_3) is used as the reducing agent. The process is selective because ammonia reacts primarily with NO and NO_2 as shown in the following equations. These are considered the main chemical reactions:

$$4\,NO + 4\,NH_3 + O_2 \xrightarrow{cat} 4\,N_2 + 6\,H_2O$$

$$2\,NO_2 + 4\,NH_3 + O_2 \xrightarrow{cat} 3\,N_2 + 6\,H_2O$$

$$NO + NO_2 + 2\,NH_3 \xrightarrow{cat} 2\,N_2 + 3\,H_2O$$

$$6\,NO + 4\,NH_3 \xrightarrow{cat} 5\,N_2 + 6\,H_2O$$

$$6\,NO_2 + 8\,NH_3 \xrightarrow{cat} 7\,N_2 + 12\,H_2O$$

Several additional side reactions may occur under certain conditions. One of the major concerns is the oxidation of SO_2 to SO_3 as shown below:

$$2\,SO_2 + O_2 \xrightarrow{cat} 2\,SO_3$$

This reaction must be minimized. Otherwise, ammonia bisulfate and ammonia sulfate is formed as shown below.

$$NH_3 + SO_3 + H_2O \longrightarrow NH_4HSO_4$$

$$2\,NH_3 + SO_3 + H_2O \longrightarrow (NH_4)_2\,SO_4$$

The condensation of these salts depends on the concentration of SO_3 and NH_3 in the flue gas and the temperature. In coal and oil fired boilers, temperatures below 480 °F favor this condensation. This condensation can cause equipment plugging downstream of the catalyst.

The formation of undesirable nitrous oxide (N_2O) is minimal within the operating temperature range of this SCR system:

$$2\,NH_3 + 5\,O_2 \longrightarrow N_2O + 3\,H_2O$$

$$8\,NH_3 + 12\,NO + 5\,O_2 \longrightarrow 10\,N_2O + 12\,H_2O$$

$$16\,NH_3 + 12\,NO_2 + 7\,O_2 \longrightarrow 14\,N_2O + 24\,H_2O$$

Other side reactions, such as the direct oxidation of ammonia to NO_x, occur significantly at above 800 °F, which is above the operating temperature of this SCR system.

$$4\,NH_3 + 7\,O_2 \longrightarrow 4\,NO_2 + 6\,H_2O$$

$$4\,NH_3 + 5\,O_2 \longrightarrow 4\,NO + 6\,H_2O$$

1.4 SCR Catalyst

The catalyst module is made up of compact, plate type, ceramic/steel elements. The chemical composition of the catalyst is a mixture of titanium dioxide (TiO_2), tungsten oxide (WO_3), and vanadium pentoxide (V_2O_5). The catalyst bed is located in a parallel flue gas duct between the economizer and air preheater. The reactor contains one dummy layer, two layers of catalyst and two additional spare layers.

The injected ammonia is adsorbed on the catalyst surface. NO and NO_2, undergo a chemical reaction with the ammonia on the surface of the catalyst. There are 13,066 ft^3 of catalyst, installed in two layers in order to provide enough surface area to achieve the guaranteed 47% NO_x reduction. The products of the chemical reaction are N_2 and H_2O that leave the stack along with the balance of the flue gas.

The SCR system is designed to remove 70% of NO_x during the initial performance tests and 47% for three years guarantees under full load conditions while maintaining the stack ammonia concentration below 2 parts per million (ppm @ 3% O_2, dry). This performance guarantees that the NO_x emissions will be equal to or less than 0.10 lb NO_x per million BTU.

The SCR catalyst is manufactured by Siemens, Inc. The specifications are:

Designation:	--	SP 328
Type:	--	Plate type, supported on a metallic base
Formulation:	--	Vanadia/Titania
Pitch:	mm	6
Wall Thickness:	mm	0.95
Open Area:	%	84
Surface Area:	m^2/m^3 ft^2/ft^3	328 100
Operating Temperature:	°F	600-750
Bulk Density:	kg/m^3 lb/ft^3	700 44
Number of Layers:	--	4 (two layers in use with the two more lay available as spares)

-	Number of Modules	–	220 total
-	Number of Elements per Module:	–	16
-	Reactor Cross Section	ft.	66 x 35
-	Catalyst Surface to Incident Flow	m^2 ft^2	192 2000
	Dimension of Element	mm inch	464 x 464 x 530 5.9 x 5.9 x 15.7
-	Catalyst Volume	m^3 ft^3	370 (installed) 13066
-	Module Dimensions	Height Width Length	74.1 inches 37.6 inches 55.1 inches
-	Estimated Module Weight	lbs, each	2890

The catalyst elements are constructed such that the catalytic surface is supported by a metallic base material and then sintered for mechanical integrity. They are assembled by the manufacturer in easy-to-install steel modules. The space between adjacent modules is sealed to ensure that the flue gas only flows through the catalyst element openings. At the end of their lifetime, the catalyst modules are removable and new modules can be installed.

The reactor contains one ceramic dummy layer that serves to ensure flue gas distribution across the catalyst and to minimize fly ash erosion of the active catalyst. The lifetime is guaranteed to be 3 years at 47 % removal efficiency. In order to receive real data of the expected lifetime, removable test plates are installed in each catalyst layer. Every time the boiler is shut down, the test plates will be removed from the catalyst and sent to the manufacturer. These plates will be tested for reactivity loss. After the tests, the rest of the catalyst lifetime can be predicted.

APPENDIX F

FUEL ANALYSIS

EMISSION UNIT #001 & #006

~~TABLE 3.2-1. SUMMARY OF DESIGN COAL PROPERTIES~~

	Steam Generator		Particulate Removal		Desulfurization	
	Illinois Basin Coal Washed		Appalachian Coal Washed		Illinois Basin Coal Not Washed	
	Typical	Range	Typical	Range	Typical	Range
Proximate Analysis						
Moisture (%)	8.00	7.0-9.0	5.0	4.5-5.5	7.5	6.5-8.5
Ash (%)	7.80	7.0-8.5	10.0	8.5-11.0	16.5	15.5-18.5
Volatile (%)	39.20	38.0-40.4	28.4	28.2-29.2	35.4	33.5-37.0
Fixed Carbon (%)	45.00	43.0-47.0	56.6	54.3-58.4	40.6	39.0-42.0
Heating Value (Btu/lb)	12,400	12,200-12,600	13,000	12,900-13,150	11,000	10,900-11,300
Sulfur (%)	2.8	2.5-3.1	0.77	0.71-0.82	3.85	3.5-4.0
Sulfur Forms						
Pyritic (%)	1.30	1.20-1.40	0.22	0.20-0.24	2.25	2.0-2.5
Organic (%)	1.65	1.55-1.77	0.54	0.52-0.56	1.83	1.70-1.95
Sulfate (%)	0.09	0.07-0.11	0.00		0.08	0.06-0.10
Reduction of SO_2 by Washing (%)	35.48		--		-0-	
Ultimate Analysis %						
Moisture	8.0	7.0-9.0	5.00	4.5-5.5	7.5	6.5-8.5
Carbon	68.73	66.0-70.0	74.09	73.0-78.0	60.15	58.0-62.0
Hydrogen	4.86	4.5-5.1	4.71	4.65-4.90	4.20	4.0-4.4
Nitrogen	1.14	1.0-1.3	1.26	1.24-1.49	1.14	1.0-1.3
Chlorine	0.16	0.12-0.20	0.13	0.02-0.15	0.12	0.08-0.16
Sulfur	2.80	2.2-3.4	0.76	0.71-0.82	3.85	3.5-4.0
Ash	7.8	7.0-8.5	10.00	8.5-11.0	16.50	15.5-18.5
Oxygen	6.51	6.0-7.0	4.04	2.38-4.04	6.54	5.5-7.0
Mineral Analysis of Ash (%)						
Phosphate Pentoxide, (P_2O_5)	0.12	0.08-0.16	0.30	0.25-0.45	0.18	0.15-0.20
Silica, (SiO_2)	49.67	48.0-51.0	47.94	46.09-48.77	43.66	42.0-45.0
Ferric Oxide, (Fe_2O_3)	19.09	17.5-20.5	9.39	8.60-11.82	21.21	20.0-22.4
Alumina, (Al_2O_3)	20.25	19.0-21.5	28.95	27.5-30.36	16.17	15.5-17.0
Titania, (TiO_2)	0.98	0.75-1.25	1.27	1.20-1.48	0.81	0.65-0.95
Lime, (CaO)	3.01	2.5-3.5	3.21	2.97-3.27	6.70	6.0-7.5
Magnesia, (MgO)	1.02	0.8-1.2	1.28	1.27-1.33	0.90	0.80-1.0
Sulfur Trioxide, (SO_3)	2.42	2.0-3.0	2.66	1.91-3.21	7.20	6.5-8.0
Potassium Oxide, (K_2O)	2.65	2.2-3.2	2.08	1.39-2.15	2.19	2.0-2.4
Sodium Oxide, (Na_2O)	0.50	0.4-0.7	0.14	0.12-0.45	0.58	0.50-0.70
Undetermined	0.24		2.78		0.40	
Fusion Temperature of Ash, F						
Reducing Atmosphere						
Initial Deformation	2,000	1,950-2,050	2,350	2,320-2,400	2,020	1,950-2,050
Softening (H-W)	2,150	2,100-2,200	2,510	2,500-2,600	2,130	2,050-2,200
Hemispherical (H-W/2)	2,200	2,150-2,250	2,670	2,600-2,740	2,160	2,100-2,200
Fluid	2,610	2,550-2,650	2,770	2,750-2,800	2,300	2,250-2,350
Viscosity T250, F	2,440	2,400-2,500	2,699	2,656-2,742	2,290	2,270-2,310
Oxidizing Atmosphere						
Initial Deformation	2,150	2,100-2,200			2,150	2,100-2,200
Softening (H-W)	2,290	2,250-2,350			2,320	2,280-2,360
Hemispherical (H-W/2)	2,350	2,300-2,400			2,350	2,300-2,400
Fluid	2,560	2,600-2,700			2,480	2,430-2,520
Viscosity, T250, F						
Fouling and Slagging Indices						
Base/Acid Ratio	0.37	0.34-0.40	0.206		0.52	0.48-0.56
Base/Acid Ratio x per cent Sulfur (dry basis)	1.13	1.05-1.21	0.167		2.16	2.0-2.3
Base/Acid Ratio x Na_2O (per cent of Ash)	0.19	0.17-0.21	0.029		0.30	0.25-0.35
Free Swelling Index	5.5	5.0-6.0	7	6-8	5.5	5.0-6.0
Hardgrove Grindability Index	55	50-60	73	65-75	55	53-58
Minimum Grindability Index	50		65		53	
Minimum Heating Value	12,200		12,900		10,900	
Top Size of Coal	1.5"		+1.25"		+2"	
Size of Bottom Mesh	28		28		28	
Per cent of Coal Passing Bottom Mesh	7.81	6-9	29.6	25-34	8.50	

STANTON ENERGY CENTER

FUEL SPECIFICATIONS

Fuel Type: **No. 6 Fuel Oil**

DATA	TYPE	GUARANTEED QUALITY
API Gravity @ 60 deg. F.	Min.	12.1
Viscosity, SSU @ 122 deg. F.	Max	175
Flash Point, deg. F.	Min	175
Pour Point, deg. F.	Max	60
Sulfur, %	Max	0.70
BS&W (combined), %	Max	1.0
Sediment (only), %	Max	0.01
Water (only), %	Max	1.00
Ash (only), %	Max	0.1
Vanadium, ppm	Max	200
Asphaltenes, %	Max	6.0
BTU/barrel	Min	6,100,000

Supplement No. EU2-02

Fuel Specification

No. 2 Fuel Oil

API Gravity @ 60 deg F	Min	30.1
Viscosity , SSU @ 100 deg F	Max	45.0
	Min	32.0
Flash Point , deg F	Min	150
Pour Point , deg F	Min	0
Sulfur , %	Max	0.30
BS&W (combined) , %	Max	0.05
Ash , %	Max	0.02
Cetane Number	Min	40.0
Carbon Residue (on 10% bottoms)	Max	0.28
BTU per Barrel	Min	5,650,000
Color	no darker than	2.5
Distillation		
10% Recovery , deg F		347 - 450
90% Recovery , deg F		630

FUEL SPECIFICATIONS

1. PIPELINE NATURAL GAS	Density	0.4 - 0.6 rel.
	Heat Value	980 - 1060 btu/scf
	% S	< 1%
	% N	< 0.5%
	% Ash	< 1%
2. LANDFILL WASTE GAS	Density	0.4 - 0.6 rel
	Heat Value	500 btu/scf
	% S	< 1%
	% N	< 0.5%
	% Ash	< 1%
3. ON SPEC USED OIL	Density	0.9 - 1.0 s.g
	Heat Value	4.5 - 5.5 MMBtu/bbls.
	% S	< 1%
	% N	< 0.5%
	% Ash	< 1%

APPENDIX G

STACK SAMPLING FACILITIES

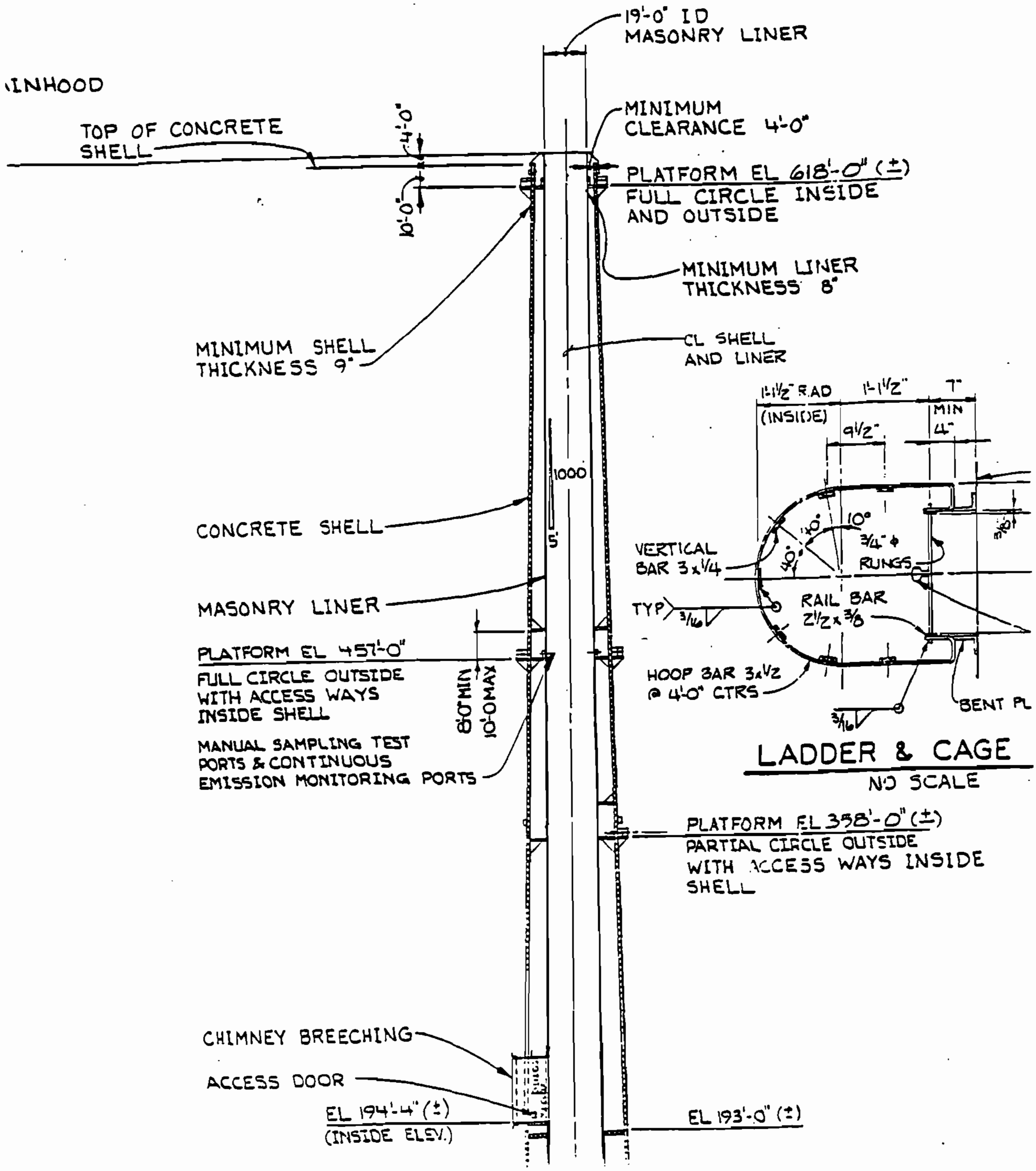

ENSR
ENSR Consulting and Engineering

FIGURE 5-1
Stack Sampling Facilities (Side View)
Orlando Utilities Commission
Curtis H. Stanton Energy Center

DRAWN: MBA	DATE: 03/18/96	PROJECT NO. 9420-063-200	REV: 0
FILE NO.:OUC5-1a.PRE	CHECKED:GPL		

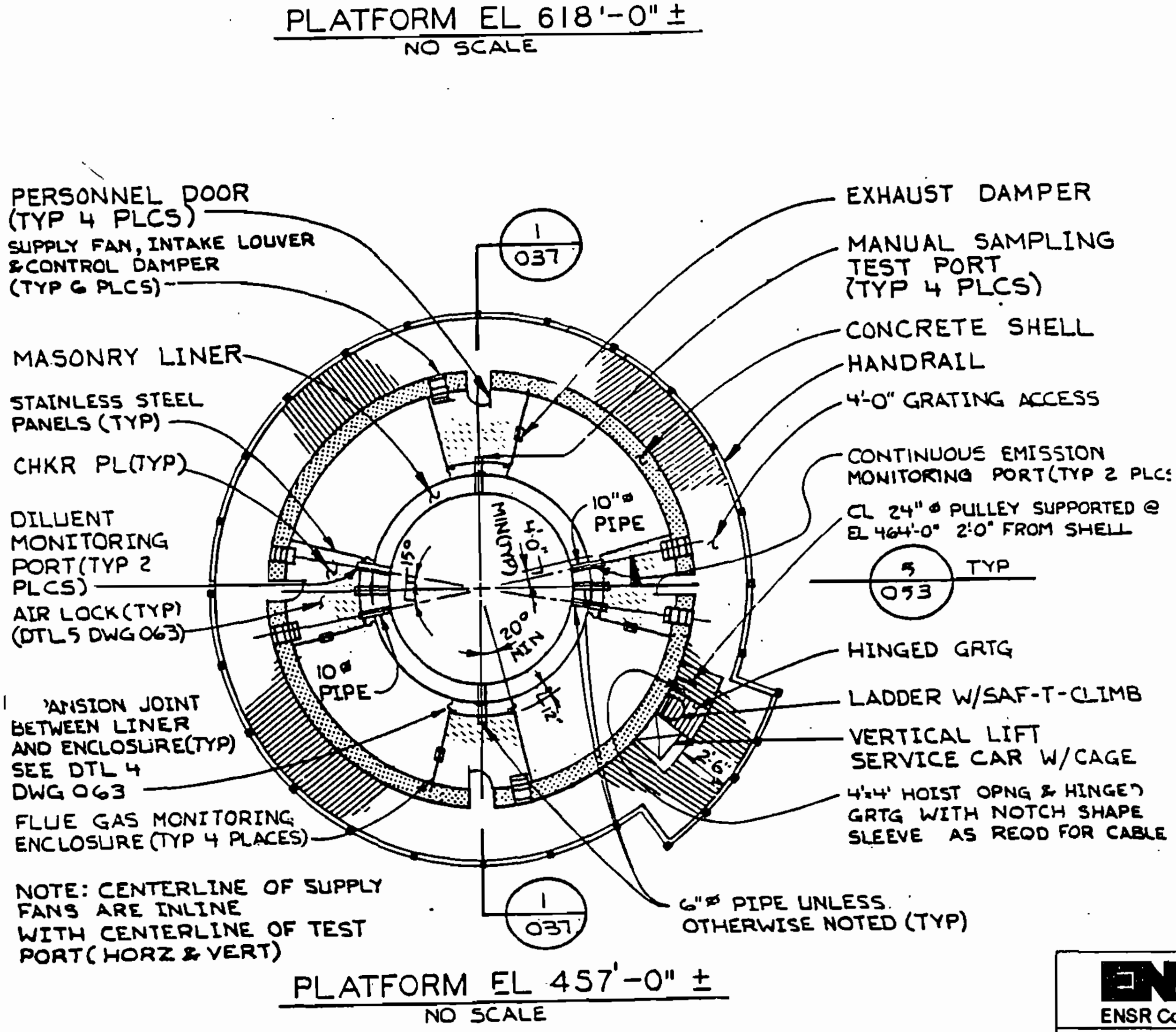

ENSR

ENSR Consulting and Engineering

FIGURE 5-2
Stack Sampling Facilities (Top View)
Orlando Utilities Commission
Curtis H. Stanton Energy Center

DRAWN: MBA	DATE: 03/18/97	PROJECT NO	REV
FILE NO.: OUC5-2.PRE	CHECKED: GPL	1050-018-290:	0

APPENDIX H

COMPLIANCE TEST REPORT

ORLANDO UTILITIES COMMISSION
500 SOUTH ORANGE AVENUE • P. O. BOX 3193 • ORLANDO, FLORIDA 32802 • 407/423-9100

Certified Mail No. Z-215-203-290
Return Receipt Requested

November 15, 1995

Mr. Hamilton S. Oven, Administrator
Siting Coordination Office
Florida Department of
Environmental Protection
2600 Blair Stone Road, MS48
Tallahassee, FL 32399-2400

Dear Mr. Oven:

Attached please find the results of the 1995 annual stack tests for particulates, NO_x, SQ , and visible emissions, as required by Condition of Certification I.C.5. of the Stanton Energy Center Certification PA 81-14.

The following table summarizes our results:

Test	**Average**	**Permitted**
Particulate (lbs/M2BTU)	0.004	0.03
Visible (% Opacity 60 Min. av.)	5.0	20.0
SO_2 (lbs/M2BTU)	0.244	1.20**
NOx (lbs/M2BTU)	0.419	0.60**

** 30-Day rolling average.

By copy of this correspondence, with document, I am also reporting to the DEP Central District and the Orange County Environmental Protection Department.

Stanton Energy Center Unit 1
Orlando Utilities Commission
Orlando, Florida
September 21, 1995

								Emissions		
		Volumetric Flow					Particulate	Particulate	SO2*	NOx*
Run	Time	SCFMD	KSCFMwet	% H20	% O2	% CO2	lbs/MMBTU	lbs/Hr	lbs/MMBTU	lbs/MMBTU
1	0920-1132	917988	64281	13.83	5.6	13.4	0.0023	9.56	0.229	0.422
2	1235-1445	910492	63797	13.89	5.6	13.4	0.0039	15.76	0.252	0.414
3	1527-1736	918186	63468	12.71	5.6	13.4	0.0067	27.70	0.250	0.422
AVERAGE		915555	63849	13.48	5.6	13.4	0.0043	17.67	0.244	0.419

*Note: Run 2 for gases from 1336-1436
Run 3 for gases from 1532-1632

Allowable Emissions:
PM - 0.03 lbs/MMBTU, 124.1 lbs/Hr
SO2 - 1.2 lbs/MMBTU 2 hour average (1.14 lbs/MMBTU 3 hour average)
NOx - 0.60 lbs/MMBTU (30 day rolling average)

BAGHOUSE COMPLIANCE REPORT

VISIBLE EMISSION OBSERVATION FORM 1

Continued on VEO Form Number

Method Used (Circle One) [✓ Method 9] 203A 203B Other: ____

Company Name: Orlando Utilitres Comission
Facility Name: Curtis H. Stanton Energy Center
Street Address: 5100 South Alafaga Trail
City: Orlando State: Florida Zip: 32831

Process: Limestone Storage Unit #: 1 Operating Mode: Continuous
Control Equipment: Dust Collector Operating Mode: Continuous

Describe Emission Point: Limestone Silo Access door
Silo #1

Height of Emis. Pt.: Start 5' End 5'
Height of Emis. Pt. Rel. to Observer: Start 0' End 0'
Distance to Emis. Pt.: Start 10' End 10'
Direction to Emis. Pt. (Degrees): Start 90° End 90°
Vertical Angle to Obs. Pt.: Start 8° 8°
Direction to Obs. Pt. (Degrees): 270° 270°
Distance and Direction to Observation Point from Emission Point: Start 10' West End 10' West

Describe Emissions: Start No VE End No VE
Emission Color: Start N/A End N/A
Water Droplet Plume: Attached ☐ Detached ☐ None ☒

Describe Plume Background: Start N/A End N/A
Background Color: Start N/A End N/A
Sky Conditions: Start N/A End N/A
Wind Speed: Start N/A End N/A
Wind Direction: Start N/A End N/A
Ambient Temp.: Start 84°F End 84°F
Wet Bulb Temp.: 75°F
RH Percent: 67%

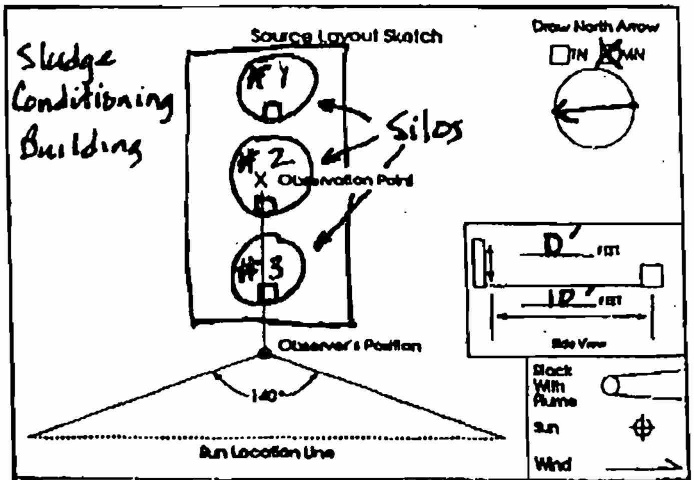

Longitude: 81°10' W Latitude: 28°29' N Declination: 28.33°

Additional Information: * see below

Observation Date: 6/15/96 Time Zone: Eastern Start Time: 1021 End Time: 1052

Min \ Sec	0	15	30	45	Min \ Sec	0	15	30	45
1	0	0	0	0	31	0	0	0	0
2	0	0	0	0	32				
3	0	0	0	0	33				
4	0	0	0	0	34				
5	0	0	0	0	35				
6	0	0	0	0	36				
7	0	0	0	0	37				
8	0	0	0	0	38				
9	0	0	0	0	39				
10	0	0	0	0	40				
11	0	0	0	0	41				
12	0	0	0	0	42				
13	0	0	0	0	43				
14	0	0	0	0	44				
15	0	0	0	0	45				
16	0	0	0	0	46				
17	0	0	0	0	47				
18	0	0	0	0	48				
19	0	0	0	0	49				
20	0	0	0	0	50				
21	0	0	0	0	51				
22	0	0	0	0	52				
23	0	0	0	0	53				
24	0	0	0	0	54				
25	0	0	0	0	55				
26	0	0	0	0	56				
27	0	0	0	0	57				
28	0	0	0	0	58				
29	0	0	0	0	59				
30	0	0	0	0	60				

Observer's Name (Print): W. J. House
Observer's Signature: WJHouse Date: 6/15/96
Organization: Orlando Utilities Comission
Certified By: Eastern Technical Assoc Date: 2/20/96

VEOF1.1

*
1. The dust collector was down for maintenance at time of VE.
2. The limestone was wet (Minimizing visible emissions)
3. The VE was performed on the silos, which are totally enclosed in a building.

EPA

VISIBLE EMISSION OBSERVAT

Method Used (Circle One) [✓ Method 9] 203A 203B Other____

SUPPLEMENT No. EU2-05

Form Number 0 0 0 0 2 | Page 1 of 2

Form Number 0 0 0 0 2

Company Name ORLANDO UTILITIES COMMIS

Facility Name CURTIS H. STANTON ENERGY

Street Address 5100 SOUTH ALAFAYA TRAIL

City ORLANDO State FLORIDA 32831

Process AUXILLARY BOILER Unit # 1 Operating Mode CONTINUOUS

Control Equipment LOW NOx BURNERS Operating Mode CONTINUOUS 100%

Describe Emission Point 42 INCHES DIAMETER AUXILLARY BOILER STACK, ELEVATION AT 150 FT. TWO FEET OF STACK PERTRUDES FROM TOP OF BUILDING

Height of Emiss. Pt. Start 150 ft. End 150 ft.

Height of Emiss. Pt. Rel. to Observer Start 8 ft. End 8 ft.

Distance to Emiss. Pt. Start 50 ft. End 50 ft.

Direction to Emiss. Pt. (Degrees) Start 270° End 270°

Vertical Angle to Obs. Pt. Start 9° End 9°

Direction to Obs. Pt. (Degrees) Start 90° End 90°

Distance and Direction to Observation Point from Emission Point Start 50 ft. E End 50 ft. E

Describe Emissions Start CLEAR End CLEAR

Emission Color Start CLEAR End CLEAR

Water Droplet Plume Attached ☐ Detached ☐ None ☒

Describe Plume Background Start CLEAR End CLEAR

Background Color Start BLUE End BLUE

Sky Conditions Start CLEAR End CLEAR

Wind Speed Start 13 mph End 17 mph

Wind Direction Start NW End NNW

Ambient Temp. Start 67° F End 72° F

Wet Bulb Temp. 61° F

RH Percent 71%

Source Layout Sketch

Draw North Arrow ☐ TN ☑ MN

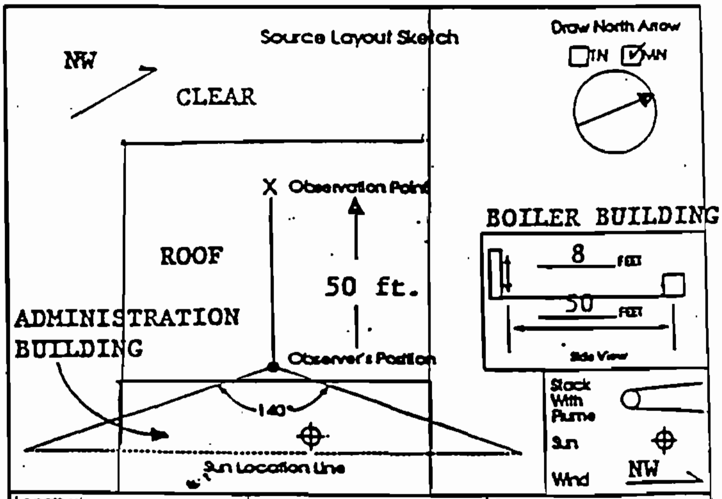

Longitude 81° 10' W

Latitude 28° 29'

Declination 28.33°

Additional Information

			Time Zone		Start Time		End Time		
Min	0	15	30	45	Min	0	15	30	45
		0	0	0	91	0	0	0	0
		0	0	0	92	0	0	0	0
		0	0	0	93	0	0	0	0
64	0	0	0	0	94	0	0	0	0
65	0	0	0	0	95	0	0	0	0
66	0	0	0	0	96	0	0	0	0
67	0	0	0	0	97	0	0	0	0
68	0	0	0	0	98	0	0	0	0
69	0	0	0	0	99	0	0	0	0
70	0	0	0	0	100	0	0	0	0
71	0	0	0	0	101	0	0	0	0
72	0	0	0	0	102	0	0	0	0
73	0	0	0	0	103	0	0	0	0
74	0	0	0	0	104	0	0	0	0
75	0	0	0	0	105	0	0	0	0
76	0	0	0	0	106	0	0	0	0
77	0	0	0	0	107	0	0	0	0
78	0	0	0	0	108	0	0	0	0
79	0	0	0	0	109	0	0	0	0
80	0	0	0	0	110	0	0	0	0
81	0	0	0	0	111	0	0	0	0
82	0	0	0	0	112	0	0	0	0
83	0	0	0	0	113	0	0	0	0
84	0	0	0	0	114	0	0	0	0
85	0	0	0	0	115	0	0	0	0
86	0	0	0	0	116	0	0	0	0
87	0	0	0	0	117	0	0	0	0
88	0	0	0	0	118	0	0	0	0
89	0	0	0	0	119	0	0	0	0
90	0	0	0	0	120	0	0	0	0

Observer's Name (Print) William J. House

Observer's Signature Date 5/21/94

Organization Orlando Utilities Commission/SEC

Certified By: Eastern Technical Associates Date 2-23-94

VEOF1.1

EPA

VISIBLE EMISSION OBSERVATION FORM 1

Method Used (Circle One): [✓ Method 9] 203A 203B Other:

Company Name: ORLANDO UTILITIES COMMISSION
Facility Name: CURTIS H. STANTON ENERGY CENTER
Street Address: 5100 SOUTH ALAFAYA TRAIL
City: ORLANDO State: FLORIDA Zip: 32831

Process: AUXILLARY BOILER Unit #: 1 Operating Mode: CONTINUOUS
Control Equipment: LOW NOx BURNERS Operating Mode: CONTINUOUS 100%

Describe Emission Point: 42 INCHES DIAMETER AUXILLARY BOILER STACK, ELEVATION AT 150 FT. TWO FEET OF STACK PERTRUDES FROM TOP OF BUILDING.

Height of Emiss. Pt.: Start 150 ft. End 150 ft.
Height of Emiss. Pt. Rel. to Observer: Start 8 ft. End 8 ft.
Distance to Emiss. Pt.: Start 50 ft. End 50 ft.
Direction to Emiss. Pt. (Degrees): Start 270° End 270°

Vertical Angle to Obs. Pt.: Start 9° End 9°
Direction to Obs. Pt. (Degrees): Start 90° End 90°
Distance and Direction to Observation Point from Emission Point: Start 50 ft. E End 50 ft. E

Describe Emissions: Start CLEAR End CLEAR
Emission Color: Start CLEAR End CLEAR
Water Droplet Plume: Attached ☐ Detached ☐ None ☒

Describe Plume Background: Start CLEAR End CLEAR
Background Color: Start BLUE End BLUE
Sky Conditions: Start CLEAR End CLEAR
Wind Speed: Start 13 mph End 17 mph
Wind Direction: Start NW End NNW
Ambient Temp.: Start 67° F End 72° F
Wet Bulb Temp.: 61° F
RH Percent: 71%

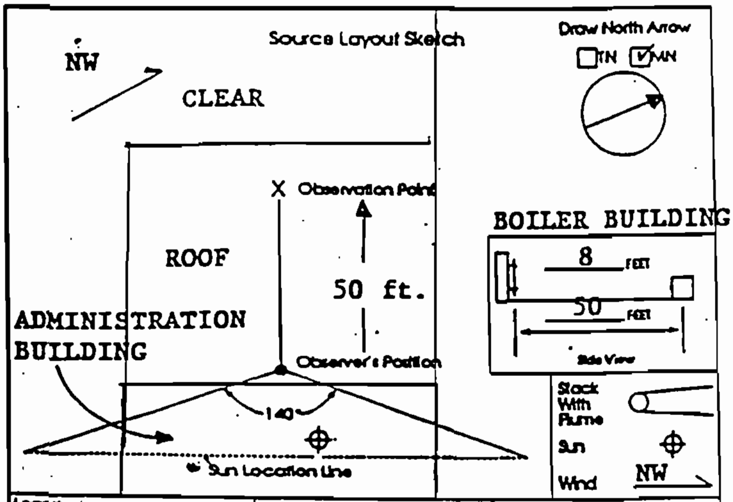

Longitude: 81° 10' W
Latitude: 28° 29'
Declination: 28.33°

Additional Information:

VEOF1.1

Form Number: 0 0 0 0 1
Page 1 of 4
Continued on VEO Form Number: 2 0 0 0 0 1

Observation Date: 5-23-94
Time Zone: EST
Start Time: 0815
End Time: 1015

Min \ Sec	0	15	30	45	Min \ Sec	0	15	30	45
1	0	0	0	0	31	0	0	0	0
2	0	0	0	0	32	0	0	0	0
3	0	0	0	0	33	0	0	0	0
4	0	0	0	0	34	0	0	0	0
5	0	0	0	0	35	0	0	0	0
6	0	0	0	0	36	0	0	0	0
7	0	0	0	0	37	0	0	0	0
8	0	0	0	0	38	0	0	0	0
9	0	0	0	0	39	0	0	0	0
10	0	0	0	0	40	0	0	0	0
11	0	0	0	0	41	0	0	0	0
12	0	0	0	0	42	0	0	0	0
13	0	0	0	0	43	0	0	0	0
14	0	0	0	0	44	0	0	0	0
15	0	0	0	0	45	0	0	0	0
16	0	0	0	0	46	0	0	0	0
17	0	0	0	0	47	0	0	0	0
18	0	0	0	0	48	0	0	0	[illegible]
19	0	0	0	0	49	0	0	0	0
20	0	0	0	0	50	0	0	0	0
21	0	0	0	0	51	0	0	0	0
22	0	0	0	0	52	0	0	0	0
23	0	0	0	0	53	0	0	0	0
24	0	0	0	0	54	0	0	0	0
25	0	0	0	0	55	0	0	0	0
26	0	0	0	0	56	0	0	0	0
27	0	0	0	0	57	0	0	0	0
28	0	0	0	0	58	0	0	0	0
29	0	0	0	0	59	0	0	0	0
30	0	0	0	0	60	0	0	0	0

Observer's Name (Print): William J. House
Observer's Signature: Date: 5/21/94
Organization: Orlando Utilities Commission/SEC
Certified by: Eastern Technical Assoc. Date: 2-23-94

VISIBLE EMISSIONS EVALUATOR

This is to certify that

W. Jerry Nousel

met the specifications of Federal Reference Method 9 and qualified as a visible emissions evaluator. Maximum deviation on white and black smoke did not exceed 7.5% opacity and no single error exceeding 15% opacity was incurred during the certification test conducted by Eastern Technical Associates of Raleigh, North Carolina. This certificate is valid for six months from date of issue.

Thomas Rose
President

242028
Certificate Number

Vice President

Orlando
Location

David B. Savage, Jr.
Program Manager

February 23, 1994
Date of Issue

VISIBLE EMISSION OBSERVATION FORM 1

Method Used (Circle One): [✓ Method 9] 203A 203B Other: ____________

Company Name: Orlando Utilities Comission
Facility Name: Curtis H. Stanton Energy Center
Street Address: 5100 South Alafaya Trail
City: Orlando State: Florida Zip: 32831

Process: Emergency Coal Stacker Unit #: 1 Operating Mode: Continuous
Control Equipment: Dust Collector #6 Operating Mode: Continuous

Describe Emission Point: 16" x 27" Rectangular, Vertical Discharge duct

Height of Emiss. Pt.: Start 15' End 15'
Height of Emiss. Pt. Rel. to Observer: Start 10' End 10'
Distance to Emiss. Pt.: Start 55' End 55'
Direction to Emiss. Pt. (Degrees): Start 90° End 90°

Vertical Angle to Obs. Pt.: Start 15° End 15°
Direction to Obs. Pt. (Degrees): Start 270° End 270°
Distance and Direction to Observation Point from Emission Point: Start 55' West End 55' West

Describe Emissions: Start Clear End Clear
Emission Color: Start Clear End Clear
Water Droplet Plume: Attached ☐ Detached ☐ None ☒

Describe Plume Background: Start Blue End Blue
Background Color: Start Blue End Blue
Sky Conditions: Start Broken End Broken
Wind Speed: Start 5-10 End 5-10
Wind Direction: Start East End East
Ambient Temp.: Start 93° F End 93° F
Wet Bulb Temp.: 78° F
RH Percent: 51 %

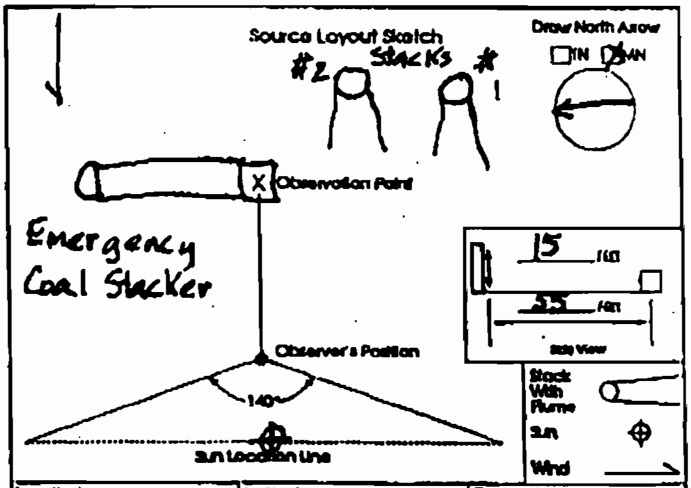

Longitude: 81° 10' W
Latitude: 28°29' N
Declination: 28.33°

Additional Information:

VEOF1.1

Continued on VEO Form Number:

Observation Date: 6/6/96
Time Zone: Eastern
Start Time: 1541
End Time: 1641

Min \ Sec	0	15	30	45	Min \ Sec	0	15	30	45
1	0	0	0	0	31	0	0	0	0
2	0	0	0	0	32	0	0	0	0
3	0	0	0	0	33	0	0	0	0
4	0	0	0	0	34	0	0	0	0
5	0	0	0	0	35	0	0	0	0
6	0	0	0	0	36	0	0	0	0
7	0	0	0	0	37	0	0	0	0
8	0	0	0	0	38	0	0	0	0
9	0	0	0	0	39	0	0	0	0
10	0	0	0	0	40	0	0	0	0
11	0	0	0	0	41	0	0	0	0
12	0	0	0	0	42	0	0	0	0
13	0	0	0	0	43	0	0	0	0
14	0	0	0	0	44	0	0	0	0
15	0	0	0	0	45	0	0	0	0
16	0	0	0	0	46	0	0	0	0
17	0	0	0	0	47	0	0	0	0
18	0	0	0	0	48	0	0	0	0
19	0	0	0	0	49	0	0	0	0
20	0	0	0	0	50	0	0	0	0
21	0	0	0	0	51	0	0	0	0
22	0	0	0	0	52	0	0	0	0
23	0	0	0	0	53	0	0	0	0
24	0	0	0	0	54	0	0	0	0
25	0	0	0	0	55	0	0	0	0
26	0	0	0	0	56	0	0	0	0
27	0	0	0	0	57	0	0	0	0
28	0	0	0	0	58	0	0	0	0
29	0	0	0	0	59	0	0	0	0
30	0	0	0	0	60	0	0	0	0

Observer's Name (Print): W.J. House
Observer's Signature: Date: 6/6/96
Organization: Orlando Utilities Comission
Certified By: Eastern Technical Assoc. Date: 2/20/96

VISIBLE EMISSION OBSERVATION FORM 1

0	0	0	0	1

Continued on VEO Form Number

Method Used (Circle One) [✓ Method 9] 203A 203B Other:

Company Name: Orlando Utilities Comission

Facility Name: Curtis H. Stanton Energy Center

Street Address: 5100 South Alafaya Trail

City: Orlando State: Florida Zip: 32831

Process: Coal Crusher Unit #: 1 Operating Mode: Continuous

Control Equipment: Dust Collector #2 Operating Mode: Continuous

Describe Emission Point: 42" x 26" Vertical, Rectangular Emission Discharge Duct

Height of Emis. Pt.: Start 15' End 15'

Height of Emis. Pt. Rel. to Observer: Start 10' End 10'

Distance to Emis. Pt.: Start 100' End 100'

Direction to Emis. Pt. (Degrees): Start 90° End 90°

Vertical Angle to Obs. Pt.: Start 8° End 8°

Direction to Obs. Pt. (Degrees): Start 270° End 270°

Distance and Direction to Observation Point from Emission Point: Start 100' W End 100' W

Describe Emissions: Start Clear End Clear

Emission Color: Start Clear End Clear

Water Droplet Plume: Attached ☐ Detached ☐ None ☒

Describe Plume Background: Start Green Building End Green Building

Background Color: Start Green End Green

Sky Conditions: Start Broken End Broken

Wind Speed: Start 0-5 End 5-10

Wind Direction: Start NE End NE

Ambient Temp.: Start 87°F End 87° F

Wet Bulb Temp.: 75° F

RH Percent: 57°F

Source Layout Sketch

Draw North Arrow ☐ TN ☒ MN

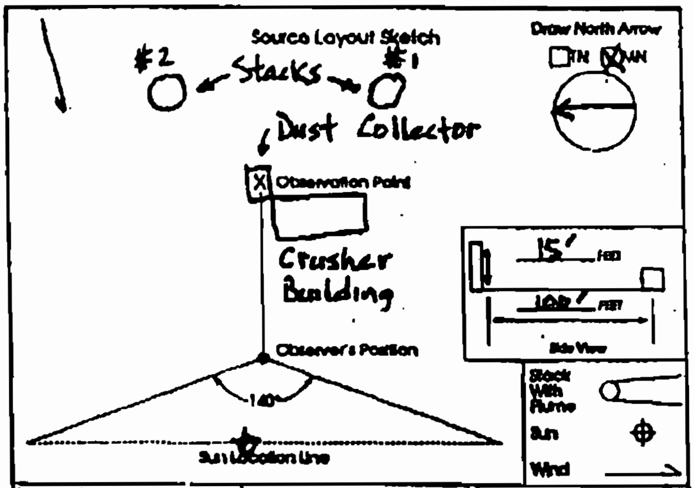

Longitude: 81° 10' W

Latitude: 28°29' N

Declination: 28.33°

Additional Information

VEOF1.1

Observation Date: 6/5/96 Time Zone: Eastern Start Time: 1500 End Time: 1600

Min \ Sec	0	15	30	45	Min \ Sec	0	15	30	45
1	0	0	0	0	31	0	0	0	0
2	0	0	0	0	32	0	0	0	0
3	0	0	0	0	33	0	0	0	0
4	0	0	0	0	34	0	0	0	0
5	0	0	0	0	35	0	0	0	0
6	0	0	0	0	36	0	0	0	0
7	0	0	0	0	37	0	0	0	0
8	0	0	0	0	38	0	0	0	0
9	0	0	0	0	39	0	0	0	0
10	0	0	0	0	40	0	0	0	0
11	0	0	0	0	41	0	0	0	0
12	0	0	0	0	42	0	0	0	0
13	0	0	0	0	43	0	0	0	0
14	0	0	0	0	44	0	0	0	0
15	0	0	0	0	45	0	0	0	0
16	0	0	0	0	46	0	0	0	0
17	0	0	0	0	47	0	0	0	0
18	0	0	0	0	48	0	0	0	0
19	0	0	0	0	49	0	0	0	0
20	0	0	0	0	50	0	0	0	0
21	0	0	0	0	51	0	0	0	0
22	0	0	0	0	52	0	0	0	0
23	0	0	0	0	53	0	0	0	0
24	0	0	0	0	54	0	0	0	0
25	0	0	0	0	55	0	0	0	0
26	0	0	0	0	56	0	0	0	0
27	0	0	0	0	57	0	0	0	0
28	0	0	0	0	58	0	0	0	0
29	0	0	0	0	59	0	0	0	0
30	0	0	0	0	60	0	0	0	0

Observer's Name (Print): W.J. House

Observer's Signature: W J House Date: 6/5/96

Organization: Orlando Utilities Commission

Certified By: Eastern Technical Assoc. Date: 2/20/96

0 0 0 0 1 1 1

Continued on VEO Form Number

VISIBLE EMISSION OBSERVATION FORM 1

Method Used (Circle One): [✓ Method 9] 203A 203B Other: ____

Company Name: Orlando Utilities Comission

Facility Name: Curtis H. Stanton Energy Center

Street Address: 5100 South Alafaya Trail

City: Orlando State: Florida Zip: 32831

Process: Boiler Coal Storage Unit #: 1 Operating Mode: Continuous

Control Equipment: Dust Collector #3 Operating Mode: Continuous

Describe Emission Point: 58" x 40.5" Rectangular, Vertical Emission Discharge Duct

Height of Emis. Pt.: Start 216.6' End 216.6'

Height of Emis. Pt. Rel. to Observer: Start 210.6' End 210.6'

Distance to Emis. Pt.: Start 300' End 300'

Direction to Emis. Pt. (Degrees): Start 100° End 100°

Vertical Angle to Obs. Pt.: Start 35° End 35°

Direction to Obs. Pt. (Degrees): Start 280° End 280°

Distance and Direction to Observation Point from Emission Point: Start 300' SW End 300' SW

Describe Emissions: Start Clear End Clear

Emission Color: Start Clear End Clear

Water Droplet Plume: Attached ☐ Detached ☐ None ☒

Describe Plume Background: Start White Building End White Building

Background Color: Start White End White

Sky Conditions: Start Clear End Clear

Wind Speed: Start 10-15 End 10-15

Wind Direction: Start NE End NE

Ambient Temp.: Start 87° F End 87° F

Wet Bulb Temp.: 75° F

RH Percent: 57%

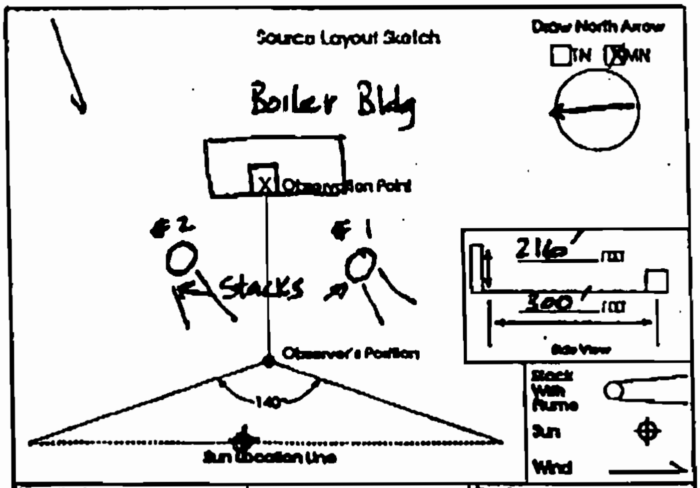

Longitude: 81° 10' W

Latitude: 28° 29' N

Declination: 28.33°

Additional Information:

VEOF1.1

Observation Date: 6/5/96 Time Zone: Eastern Start Time: 1700 End Time: 1800

Min \ Sec	0	15	30	45	Min \ Sec	0	15	30	45
1	0	0	0	0	31	0	0	0	0
2	0	0	0	0	32	0	0	0	0
3	0	0	0	0	33	0	0	0	0
4	0	0	0	0	34	0	0	0	0
5	0	0	0	0	35	0	0	0	0
6	0	0	0	0	36	0	0	0	0
7	0	0	0	0	37	0	0	0	0
8	0	0	0	0	38	0	0	0	0
9	0	0	0	0	39	0	0	0	0
10	0	0	0	0	40	0	0	0	0
11	0	0	0	0	41	0	0	0	0
12	0	0	0	0	42	0	0	0	0
13	0	0	0	0	43	0	0	0	0
14	0	0	0	0	44	0	0	0	0
15	0	0	0	0	45	0	0	0	0
16	0	0	0	0	46	0	0	0	0
17	0	0	0	0	47	0	0	0	0
18	0	0	0	0	48	0	0	0	0
19	0	0	0	0	49	0	0	0	0
20	0	0	0	0	50	0	0	0	0
21	0	0	0	0	51	0	0	0	0
22	0	0	0	0	52	0	0	0	0
23	0	0	0	0	53	0	0	0	0
24	0	0	0	0	54	0	0	0	0
25	0	0	0	0	55	0	0	0	0
26	0	0	0	0	56	0	0	0	0
27	0	0	0	0	57	0	0	0	0
28	0	0	0	0	58	0	0	0	0
29	0	0	0	0	59	0	0	0	0
30	0	0	0	0	60	0	0	0	0

Observer's Name (Print): W.J. House

Observer's Signature: WJHouse Date: 6/5/96

Organization: Orlando Utilities Comission

Certified By: Eastern Technical Assoc. Date: 2/20/96

ETA

VISIBLE EMISSION OBSERVATION FORM 1

Method Used (Circle One): [✓ Method 9] 203A 203B Other: ______

Company Name: Orlando Utilities Comission
Facility Name: Curtis H. Stanton Energy Center
Street Address: 5100 South Alafaya Trail
City: Orlando State: Florida Zip: 32831

Process: Coal Transfer Unit #: 1 Operating Mode: Continuous
Control Equipment: Dust Collector #1 Operating Mode: Continuous

Describe Emission Point:
(1) Rectangular exhaust at 8' Elevation
100' North of Coal Transfer Bldg.

Height of Emis. Pt.: Start 8' End 8'
Height of Emis. Pt. Rel. to Observer: Start 2' End 2'
Distance to Emis. Pt.: Start 150' End 150'
Direction to Emis. Pt. (Degrees): Start 90° End 90°

Vertical Angle to Obs. Pt.: Start 3° End 3°
Direction to Obs. Pt. (Degrees): Start 270° End 270°
Distance and Direction to Observation Point from Emission Point: Start 150' West End 150' West

Describe Emissions: Start clear End clear
Emission Color: Start clear End clear
Water Droplet Plume: Attached ☐ Detached ☐ None ☒

Describe Plume Background: Start Grey ash pile End Grey ash pile
Background Color: Start Grey End Grey
Sky Conditions: Start Broken End Broken
Wind Speed: Start 5-10 End 5-10
Wind Direction: Start E End E
Ambient Temp.: Start 82 °F End 70° F
Wet Bulb Temp.: 70 °F
RH Percent: 56%

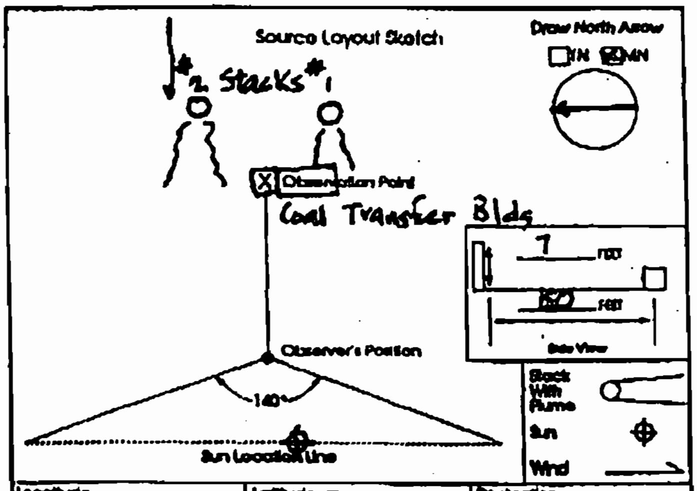

Longitude: 81° 10' W
Latitude: 28°29' N
Declination: 28.33°

Additional Information: Exhaust is 30¾" × 42" Rectangle

VEOF1.1

0 0 0 0 1

Continued on VEO Form Number: ______

Observation Date: 6/3/96 Time Zone: Eastern Start Time: 1730 End Time: 1830

Min \ Sec	0	15	30	45	Min \ Sec	0	15	30	45
1	0	0	0	0	31	0	0	0	0
2	0	0	0	0	32	0	0	0	0
3	0	0	0	0	333	0	0	0	0
4	0	0	0	0	34	0	0	0	0
5	0	0	0	0	35	0	0	0	0
6	0	0	0	0	36	0	0	0	0
7	0	0	0	0	37	0	0	0	0
8	0	0	0	0	38	0	0	0	0
9	0	0	0	0	39	0	0	0	0
10	0	0	0	0	40	0	0	0	0
11	0	0	0	0	41	0	0	0	0
12	0	0	0	0	42	0	0	0	0
13	0	0	0	0	43	0	0	0	0
14	0	0	0	0	44	0	0	0	0
15	0	0	0	0	45	0	0	0	0
16	0	0	0	0	46	0	0	0	0
17	0	0	0	0	47	0	0	0	0
18	0	0	0	0	48	0	0	0	0
19	0	0	0	0	49	0	0	0	0
20	0	0	0	0	50	0	0	0	0
21	0	0	0	0	51	0	0	0	0
22	0	0	0	0	52	0	0	0	0
23	0	0	0	0	53	0	0	0	0
24	0	0	0	0	54	0	0	0	0
25	0	0	0	0	55	0	0	0	0
26	0	0	0	0	56	0	0	0	0
27	0	0	0	0	57	0	0	0	0
28	0	0	0	0	58	0	0	0	0
29	0	0	0	0	59	0	0	0	0
30	0	0	0	0	60	0	0	0	0

Observer's Name (Print): W.J. House
Observer's Signature: Date: 6/3/96
Organization: Orlando Utilities Comission
Certified by: Eastern Technical Assoc. Date: 2/20/96

EPA

VISIBLE EMISSION OBSERVATION FORM 1

Form Number 0 0 0 0 2 Page 1 of 2

Continued on VEO Form Number 0 0 0 0 2

Method Used (Circle One) [✓ Method 9] 203A 203B Other:

Company Name ORLANDO UTILITIES COMMISSION

Facility Name CURTIS H. STANTON ENERGY CENTER

Street Address 5100 SOUTH ALAFAYA TRAIL

City ORLANDO State FLORIDA Zip 32831

Process AUXILLARY BOILER Unit # 1 Operating Mode CONTINUOUS

Control Equipment LOW NOx BURNERS Operating Mode CONTINUOUS 100%

Describe Emission Point 42 INCHES DIAMETER AUXILLARY BOILER STACK, ELEVATION AT 150 FT. TWO FEET OF STACK PERTRUDES FROM TOP OF BUILDING

Height of Emiss. Pt. Start 150 ft. End 150 ft. Height of Emiss. Pt. Rel. to Observer Start 8 ft. End 8 ft.

Distance to Emiss. Pt. Start 50 ft. End 50 ft. Direction to Emiss. Pt. (Degrees) Start 270° End 270°

Vertical Angle to Obs. Pt. Start 9° End 9° Direction to Obs. Pt. (Degrees) Start 90° End 90°

Distance and Direction to Observation Point from Emission Point Start 50 ft. E End 50 ft. E

Describe Emissions Start CLEAR End CLEAR

Emission Color Start CLEAR End CLEAR Water Droplet Plume Attached ☐ Detached ☐ None ☒

Describe Plume Background Start CLEAR End CLEAR

Background Color Start BLUE End BLUE Sky Conditions Start CLEAR End CLEAR

Wind Speed Start 13 mph End 17 mph Wind Direction Start NW End NNW

Ambient Temp. Start 67° F End 72° F Wet Bulb Temp. 61° F RH Percent 71%

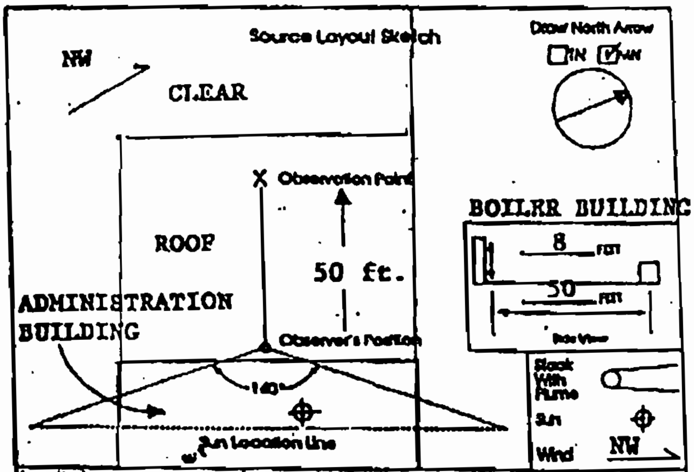

Longitude 81° 10' W Latitude 28° 29' Declination 28.33°

Additional Information

Observation Date Time Zone Start Time End Time

Min \ Sec	0	15	30	45	Min \ Sec	0	15	30	45
61	0	0	0	0	91	0	0	0	0
62	0	0	0	0	92	0	0	0	0
63	0	0	0	0	93	0	0	0	0
64	0	0	0	0	94	0	0	0	0
65	0	0	0	0	95	0	0	0	0
66	0	0	0	0	96	0	0	0	0
67	0	0	0	0	97	0	0	0	0
68	0	0	0	0	98	0	0	0	0
69	0	0	0	0	99	0	0	0	0
70	0	0	0	0	100	0	0	0	0
71	0	0	0	0	101	0	0	0	0
72	0	0	0	0	102	0	0	0	0
73	0	0	0	0	103	0	0	0	0
74	0	0	0	0	104	0	0	0	0
75	0	0	0	0	105	0	0	0	0
76	0	0	0	0	106	0	0	0	0
77	0	0	0	0	107	0	0	0	0
78	0	0	0	0	108	0	0	0	0
79	0	0	0	0	109	0	0	0	0
80	0	0	0	0	110	0	0	0	0
81	0	0	0	0	111	0	0	0	0
82	0	0	0	0	112	0	0	0	0
83	0	0	0	0	113	0	0	0	0
84	0	0	0	0	114	0	0	0	0
85	0	0	0	0	115	0	0	0	0
86	0	0	0	0	116	0	0	0	0
87	0	0	0	0	117	0	0	0	0
88	0	0	0	0	118	0	0	0	0
89	0	0	0	0	119	0	0	0	0
90	0	0	0	0	120	0	0	0	0

Observer's Name (Print) William J. House

Observer's Signature Date 5/21/94

Organization Orlando Utilities Commission/SEC

Certified By Eastern Technical Associates Date 2-23-94

VEOF1.1

EPA

VISIBLE EMISSION OBSERVATION FORM 1

Form Number: 0 0 0 0 1
Page 1 of 4
Continued on VEO Form Number: 2 0 0 0 0 1

Method Used (Circle One): [✓ Method 9] 203A 203B Other: ____

Company Name: ORLANDO UTILITIES COMMISSION
Facility Name: CURTIS H. STANTON ENERGY CENTER
Street Address: 5100 SOUTH ALAFAYA TRAIL
City: ORLANDO State: FLORIDA Zip: 32831

Process: AUXILLARY BOILER Unit #: 1 Operating Mode: CONTINUOUS
Control Equipment: LOW NOx BURNERS Operating Mode: CONTINUOUS 100%

Describe Emission Point: 42 INCHES DIAMETER AUXILLARY BOILER STACK, ELEVATION AT 150 FT. TWO FEET OF STACK PERTRUDES FROM TOP OF BUILDING

Height of Emiss. Pt.: Start 150 ft. End 150 ft.
Height of Emiss. Pt. Rel. to Observer: Start 8 ft. End 8 ft.
Distance to Emiss. Pt.: Start 50 ft. End 50 ft.
Direction to Emiss. Pt. (Degrees): Start 270° End 270°

Vertical Angle to Obs. Pt.: Start 9° End 9°
Direction to Obs. Pt. (Degrees): Start 90° End 90°
Distance and Direction to Observation Point from Emission Point: Start 50 ft. E End 50 ft. E

Describe Emissions: Start CLEAR End CLEAR
Emission Color: Start CLEAR End CLEAR
Water Droplet Plume: Attached ☐ Detached ☐ None ☒

Describe Plume Background: Start CLEAR End CLEAR
Background Color: Start BLUE End BLUE
Sky Conditions: Start CLEAR End CLEAR
Wind Speed: Start 13 mph End 17 mph
Wind Direction: Start NW End NNW
Ambient Temp.: Start 67° F End 72° F
Wet Bulb Temp.: 61° F
RH Percent: 71%

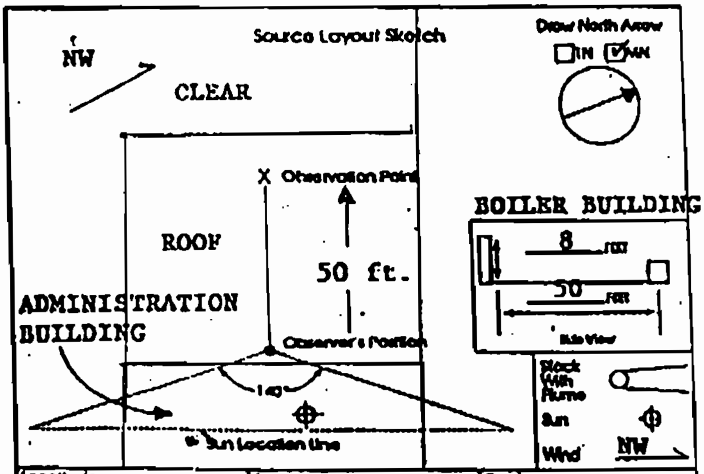

Draw North Arrow: ☐ TN ☑ MN

Longitude: 81° 10' W
Latitude: 28° 29'
Declination: 28.33°

Additional Information:

VEOF1.1

Observation Date: 5-23-94
Time Zone: EST
Start Time: 0815
End Time: 1015

Sec / Min	0	15	30	45	Sec / Min	0	15	30	45
1	0	0	0	0	31	0	0	0	0
2	0	0	0	0	32	0	0	0	0
3	0	0	0	0	33	0	0	0	0
4	0	0	0	0	34	0	0	0	0
5	0	0	0	0	35	0	0	0	0
6	0	0	0	0	36	0	0	0	0
7	0	0	0	0	37	0	0	0	0
8	0	0	0	0	38	0	0	0	0
9	0	0	0	0	39	0	0	0	0
10	0	0	0	0	40	0	0	0	0
11	0	0	0	0	41	0	0	0	0
12	0	0	0	0	42	0	0	0	0
13	0	0	0	0	43	0	0	0	0
14	0	0	0	0	44	0	0	0	0
15	0	0	0	0	45	0	0	0	0
16	0	0	0	0	46	0	0	0	0
17	0	0	0	0	47	0	0	0	0
18	0	0	0	0	48	0	0	0	0
19	0	0	0	0	49	0	0	0	0
20	0	0	0	0	50	0	0	0	0
21	0	0	0	0	51	0	0	0	0
22	0	0	0	0	52	0	0	0	0
23	0	0	0	0	53	0	0	0	0
24	0	0	0	0	54	0	0	0	0
25	0	0	0	0	55	0	0	0	0
26	0	0	0	0	56	0	0	0	0
27	0	0	0	0	57	0	0	0	0
28	0	0	0	0	58	0	0	0	0
29	0	0	0	0	59	0	0	0	0
30	0	0	0	0	60	0	0	0	0

Observer's Name (Print): William J. House
Observer's Signature: Date: 5/21/94
Organization: Orlando Utilities Commission/SEC
Certified By: Eastern Technical Assoc. Date: 2-23-94

VISIBLE EMISSIONS EVALUATOR

This is to certify that

W. Jerry Nousel

met the specifications of Federal Reference Method 9 and qualified as a visible emissions evaluator. Maximum deviation on white and black smoke did not exceed 7.5% opacity and no single error exceeding 15% opacity was incurred during the certification test conducted by Eastern Technical Associates of Raleigh, North Carolina. This certificate is valid for six months from date of issue.

Thomas
President

242028
Certificate Number

Orlando
Location

David B. Savage, Jr.
Program Manager

February 23, 1994
Date of Issue

VISIBLE EMISSIONS EVALUATION

[illegible] that

W[illegible]ouse

did complete a course in the [illegible]s of [illegible] of visible emissions from sources as specified by Federal R[illegible] Meth[illegible] [illegible]astern Technical Associates of Raleigh, North Carolina[illegible]

William [illegible]rles

Cour[illegible]

[illegible]do, Florida

[illegible]cation

February 20,1996

Date

VISIBLE EMISSIONS EVALUATOR

Thi ... that

W ... House

met the specifications of Fe ... d 9 and qualified as a visible emissions evaluator. Maxim ... d black smoke did not exceed 7.5% opacity and no singl ... ex ... ity was incurred during the certification test conduc ... Eas ... ociates of Raleigh, North Carolina. This certifica ... of issue.

Pres ...

251784
... ate Number

..., Florida

David B. Savage, Jr.
Program Manager

February 22, 1996
Date of Issue

APPENDIX I

STARTUP/SHUTDOWN PROCEDURES

Supplement No. EU2-06

Startup / Shutdown Procedures

Detailed startup/shutdown procedures are contained in the operation manuels provided by the original equipment manufacturer. These manuels are located at various locations within the plant. Specific instructions for the operation of the Auxillary Boiler are found in two 4" binders. Because of the length of these procedures, they are not included in this document; however they are always on file at the facility and may be reviewed at any time.

APPENDIX J

OPERATION & MAINTENANCE PLAN

ORLANDO UTILITIES COMMISSION

C. H. STANTON ENERGY CENTER

OPERATION AND MAINTENANCE MANUAL

PURPOSE:

To ensure the correct, safe operation and maintenance of plant equipment and systems. This manual shall provide procedures for operating and maintaining plant equipment during periods of start-up, shutdown and malfunction.

APPLICABILITY:

The procedures set forth in this plan only pertain to those items directly related to the generation and control of emissions.

PROCEDURES:

Contained at the facility are manuals provided by the OEM (Original Equipment Manufacturer) that specify the proper operation and maintenance of each piece of equipment and systems. As these manuals are voluminous, they are only referenced in this plan. These manuals provide detailed specifications for all phases of operation and maintenance including start-up, shutdown and malfunction of this equipment.

Operators use data from the continuous emissions monitoring systems to minimize excess emissions during start-up, shutdown, malfunction and normal plant operation. If excess emissions are detected, the proper plant personnel are notified and corrective actions are taken such as performing maintenance on an item, adjusting the controls or shedding load off the unit. Recurring problems are addressed using best management practices.

TRAINING:

Plant operations personnel first begin as apprentices, where they are allowed time to learn plant systems under the expertise of a trained plant operator. Over time, they are taught the best operational practices for each system and piece of equipment. Additionally, each operator continues training throughout his/her career through use of the NUS Power Plant Operations and Power Plant Maintenance series. Promotions are contingent upon the successful completion of each phase of this series and failure to successfully complete the training may result in demotion. Training records are maintained at the facility.

Maintenance personnel also begin as an apprentice, working under the supervision of trained maintenance personnel. Their progression is also dependant upon successful completion of the NUS Power Plant Maintenance series. Training records are maintained at the facility.

MAINTENANCE PLANNING:

The facility uses a computerized maintenance scheduler that generates work orders based upon OEM recommendations. All work orders are completed based upon a variety of factors such as the last time the work order was completed, the availability of plant resources or the cost to complete the work order. Furthermore, work orders may be deferred until the next scheduled outage. Additionally, maintenance is completed on an as needed basis, due to emergencies and equipment failure.

Maintenance records are kept at the facility for each work order and trouble report. Maintenance history for each system or large piece of equipment is also available.

APPENDIX K

ACID RAIN APPLICATION

PHASE II PERMIT APPLICATION

For more information, see instructions and refer to 40 CFR 72.30 and 72.31 and Chapter 214, F.A.C.

This submission is: ☒ New ☐ Revised

Step 1
Identify the source by plant name, State, and ORIS code from NADB

Stanton Energy Center Plant Name	Fl State	564 ORIS Code

Step 2
Enter the boiler ID# from NADB for each affected unit, and indicate whether a repowering plan is being submitted for the unit by entering "yes" or "no" at column c. For new units, enter the requested information in columns d and e

	Compliance Plan			
a Boiler ID#	b Unit Will Hold Allowances in Accordance with 40 CFR 72.9(c)(1)	c Repowering Plan	d New Units Commence Operation Date	e New Units Monitor Certification Deadline
1	Yes	No		
2	Yes	No	15 Apr 1996	15 Jul 1996
	Yes			
	Yes			
	Yes			
	Yes			
	Yes			
	Yes			
	Yes			
	Yes			

STEP 3
Check the box if the response in column c of Step 2 is "yes" for any unit

☐ For each unit that will be repowered, the Repowering Extension Plan form is included and the Repowering Technology Petition form has been submitted or will be submitted by June 1, 1997.

If you have any questions regarding this matter, please contact me at 407/423-9133.

Very truly yours,

Robert F. Hicks
Sr. Environmental Engineer

RFH:rc
Attachment

xc: F. F. Haddad, Jr.
D. M. Spencer
G. A. DeMuth
W. J. House, w/attachment
Vivian Garfein - FDEP, w/attachment
(Cert. Mail No. Z-215-203-291)
Anna Hacaha-Long - OCEPD, w/attachment

i:\wpfiles\dep\reports\ansec95

Plant Name (from Step 1)

Stanton Energy Center

Step 4
Read the standard requirements and certification, enter the name of the designated representative, and sign and date

Standard Requirements

Permit Requirements:

(1) The designated representative of each Acid Rain source and each Acid Rain unit at the source shall:
(i) Submit a complete Acid Rain part application (including a compliance plan) under 40 CFR part 72, Rules 62-214.320 and 330, F.A.C.; and
(ii) Submit in a timely manner any supplemental information that the permitting authority determines is necessary to review an Acid Rain part application and issue or deny an Acid Rain permit;
(2) The owners and operators of each Acid Rain source and each Acid Rain unit at the source shall:
(i) Operate the unit in compliance with a complete Acid Rain part application or a superseding Acid Rain part issued by the permitting authority; and
(ii) Have an Acid Rain Part.

Monitoring Requirements:

(1) The owners and operators and, to the extent applicable, designated representative of each Acid Rain source and each Acid Rain unit at the source shall comply with the monitoring requirements as provided in 40 CFR part 75, and Rule 62-214.420, F.A.C.
(2) The emissions measured recorded and reported in accordance with 40 CFR part 75 shall be used to determine compliance by the unit with the Acid Rain emissions limitations and emissions reduction requirements for sulfur dioxide and nitrogen oxides under the Acid Rain Program.
(3) The requirements of 40 CFR part 75 shall not affect the responsibility of the owners and operators to monitor the emissions of other pollutants or other emissions characteristics at the unit under other applicable requirements of the Act and other provisions of the operating permit for the source.

Sulfur Dioxide Requirements:

(1) The owners and operators of each source and each Acid Rain unit at the source shall:
(i) Hold allowances , as of the allowance transfer deadline, in the unit's compliance subaccount (after deductions under 40 CFR 73.34(c)) not less than the total annual emissions of sulfur dioxide for the previous calendar year from the unit; and
(ii) Comply with the applicable Acid Rain emissions limitations for sulfur dioxide.
(2) Each ton of sulfur dioxide emitted in excess of the Acid Rain emissions limitations for sulfur dioxide shall constitute a separate violation of the Act.
(3) An Acid Rain unit shall be subject to the requirements under paragraph (1) of the sulfur dioxide requirements as follows:
(i) Starting January 1, 2000, an Acid Rain unit under 40 CFR 72.6(a)(2); or
(ii) Starting on the later of January 1, 2000 or the deadline for monitor certificationunder 40 CFR part 75, an Acid Rain unit under 40 CFR 72.6(a)(3).
(4) Allowances shall be held in, deducted from, or transferred among Allowance Tracking System accounts in accordance with the Acid Rain Program.
(5) An allowance shall not be deducted in order to comply with the requirements under paragraph (1)(i) of the sulfur dioxide requirements prior to the calendar year for which the allowance was allocated.
(6) An allowance allocated by the Administrator under the Acid Rain Program is a limited authorization to emit sulfur dioxide in accordance with the Acid Rain Program. No provision of the Acid Rain Program, the Acid Rain permit application, the Acid Rain permit, or the written exemption under 40 CFR 72.7 and 72.8 and no provision of law shall be construed to limit the authority of the United States to terminate or limit such authorization.
(7) An allowance allocated by the Administrator under the Acid Rain Program does not constitute a property right.

Nitrogen Oxides Requirements: The owners and operators of the source and each Acid Rain unit at the source shall comply with the applicable Acid Rain emissions limitation for nitrogen oxides.

Excess Emissions Requirements:

(1) The designated representative of an Acid Rain unit that has excess emissions in any calendar year shall submit a proposed offset plan, as required under 40 CFR part 77.
(2) The owners and operators of an Acid Rain unit that has excess emissions in any calendar year shall:
(i) Pay without demand the penalty required, and pay upon demand the interest on that penalty, as required by 40 CFR part 77; and
(ii) Comply with the terms of an approved offset plan, as required by 40 CFR part 77,

Recordkeeping and Reporting Requirements:

(1) Unless otherwise provided, the owners and operators of the source and each Acid Rain unit at the source shall keep on site at the source each of the following documents for a period of 5 years from the date the document is created. This period may be extended for cause, at any time prior to the end of 5 years, in writing by the Administrator or permitting authority:
(i) The certificate of representation for the designated representative for the source and each Acid Rain unit at the source and all documents that demonstrate the truth of the statements in the certificate of representation, in accordance with Rule 62-214.350, F.A.C.; provided that the certificate and documents shall be retained on site at the source beyond such 5-year period until such documents are superseded because of the submission of a new certification of representation changing the designated representative;
(ii) All emissions monitoring information, in accordance with 40 CFR part 75;
(iii) Copies of all reports, compliance certifications, and other submissions and all records made or required under the Acid Rain Program; and,

Plant Name (from Step 1)

Stanton Energy Center

Recordkeeping and Reporting Requirements (cont.)

(iv) Copies of all documents used to complete an Acid Rain part application and any other submission under the Acid Rain Program or to demonstrate compliance with the requirements of the Acid Rain Program.

(2) The designated representative of an Acid Rain source and each Acid Rain unit at the source shall submit the reports and compliance certifications required under the Acid Rain Program, including those under 40 CFR part 72 subpart I and 40 CFR part 75.

Liability:

(1) Any person who knowingly violates any requirement or prohibition of the Acid Rain Program, a complete Acid Rain part application, an Acid Rain part, or written exemption under 40 CFR 72.7 or 72.8, including any requirement for payment of any penalty owed to the United States, shall be subject to enforcement pursuant to section 113(c) of the Act.
(2) Any person who knowingly makes a false, material statement in any record, submission, or report under the Acid Rain Program shall be subject to criminal enforcement pursuant to section 113(c) of the Act and 18 U.S.C. 1001.
(3) No permit revision shall excuse any violation of the requirements of the Acid Rain Program that occurs prior to the date that the revision takes effect.
(4) Each Acid Rain source and each Acid Rain unit shall meet the requirements of the Acid Rain Program.
(5) Any provision of the Acid Rain Program that applies to an Acid Rain source (including a provision applicable to the designated representative of an Acid Rain source) shall also apply to the owners and operators of such source and of the Acid Rain units at the source.
(6) Any provision of the Acid Rain Program that applies to an Acid Rain unit (including a provision applicable to the designated representative of an Acid Rain unit) shall also apply to the owners and operators of such unit. Except as provided under 40 CFR 72.44 (Phase II repowering extension plans) and except with regard to the requirements applicable to units with a common stack under 40 CFR part 75 including 40 CFR 75.16, 75.17, 75.17, and 75.18), the owners and operators and the designated representative of one Acid Rain unit shall not be liable for any violation by any other Acid Rain unit of which they are not owners or operators or the designated representative and that is located at a source of which they are not owners or operators or the designated representative.
(7) Each violation of a provision of 40CFR parts 72, 73, 75, 77, and 78 by an Acid Rain source or Acid Rain unit, or by an owner or operator or designated representativeof such source or unit, shall be a separate violation of the Act.

Effect on Other Authorities: No provision of the Acid Rain Program, an Acid Rain part application, an Acid Rain part, or a written exemption under 40 CFR 72.7 or 72.8 shall be construed as:

(1) Except as expressly provided in title IV of the Act, exempting or excluding the owners and operators and, to the extent applicable, the designated representative of an Acid Rain source or Acid Rain unit from compliance with any provision of the Act, including the provisions of title I of the Act relating to applicable National Air Quality Standards or State Implementation Plans;
(2) Limiting the number of allowances a unit can hold; provided, that the number of allowances held by the unit shall not affect the source's obligation to comply with any other provisions of the Act;
(3) Requiring a change of any kind in any State law regulating electric utility rates and charges, affecting any State law regarding such State regulation, or limiting such State regulation, including any prudent review requirements under such State law;
(4) Modifying the Federal Power Act or affecting the authority of the Federal Energy Regulatory Commission under the Federal Power Act; or,
(5) Interfering with or impairing any program for competitive bidding for power supply in a State in which such program is established.

Certification

I am authorized to make this submission on behalf of the owners and operators of the Acid Rain source or Acid Rain units for which the submission is made. I certify under penalty of law that I have personally examined, and am familiar with, the statements and information submitted in this document and all its attachments. Based on my inquiry of those individuals with primary responsibility for obtaining the information, I certify that the statements and information are to the best of my knowledge and belief true, accurate, and complete. I am aware that there are significant penalties for submitting false statements and information or omitting required statements and information, including the possibility of fine or imprisonment.

Name Fred F. Haddad, Jr.	
Signature	Date 12/15/95

Plant Name (from Step 1)

Stanton Energy Center

Step 5 (optional)
Enter the source AIRS and FINDS identification numbers, if known

AIRS	30-ORL-48-0137
FINDS	

ATTACHMENT:

Acid Rain Phase II Permit Application Compilance Plan

Stanton Energy Center
Unit 1 and Unit 2

ORIS 564

The Orlando Utilities Commission (OUC) will hold SO2 allowances in each unit's compliance subaccount not less than the total annual emissions of sulfur dioxide emitted from each respective unit. Should additional allowances, beyond those allocated to OUC, be required, the Commission will purchase a sufficient number of allowances on the open market.

The Orlando Utilities Commission will comply with the applicable nitrogen oxide emissions limitation established by regulation.

APPENDIX L

POTENTIAL EMISSION CALCULATIONS

Potential Emissions Inventory
Orlando Utilities Commission
Stanton Units 1 & 2

Source ID	Source Description	Particulates		PM10	
		lb/hr	ton/yr	lb/hr	ton/yr
	Fossil Unit #1	124	544	124	544
BLR-1	Auxiliary Boiler #1	1.48E-03	6.48E-03	1.48E-03	6.48E-03
1ASB-SLO-1	#1 Fly Ash Silo - Collector 1	1.08	4.71	1.08	4.71
1ASB-SLO-1	#1 Fly Ash Silo - Collector 2	1.08	4.71	1.08	4.71
1ASB-SLO-1	#1 Fly Ash Silo - Silo Vent	0.939	4.12	0.939	4.12
CTW-1	Cooling Tower #1	5.94	26	5.94	26
	Fossil Unit #2	85.7	376	85.7	376
	#2 Fly Ash Silo - Collector 1	1.08	4.71	1.08	4.71
	#2 Fly Ash Silo - Collector 2	1.08	4.71	1.08	4.71
	#2 Fly Ash Silo - Silo Vent	0.939	4.12	0.939	4.12
	Cooling Tower #2	5.94	26	5.94	26
	Coal Car Unloading to Belt 1	4.14	3.19	1.94	1.5
	Belt 1 to Belt 2 Transfer	4.14	3.19	1.94	1.5
	Stacker/ Reclaimer Operation	3.26	0.084	1.54	0.04
1CHF-DCO-1	Transfer Building Dust Collector	8.26	36.2	8.26	36.2
1CHF-DCO-2	Crusher Building Dust Collector	5.75	25.2	5.75	25.2
	Emergency (Reserve) Stockout Transfer	3.26	0.084	1.54	0.04
1CHF-DCO-6	Emergency (Reserve) Reclaim Dust Collector	1.11	4.84	1.11	4.84
1CHF-DCO-3	Plant Transfer Dust Collector	13.6	59.4	13.6	59.4
	Coal Storage Pile Wind Erosion	7.9	18.1	7.9	18.1
	Coal Emergency Stockout Wind Erosion	0.3	1.2	0.3	1.2
	Limestone Receiving	0.034	0.18	0.016	0.085
	Limestone Reclaim	0.412	0.18	0.195	0.085
1CHF-DCO-4	Limestone Hopper (Day Bin) Dust Collector	3.93	17.2	3.93	17.2
	Limestone Storage Pile Wind Erosion	0.444	1.94	0.444	1.94
1BMB-SLO-1	Limestone Storage Silo for Sludge Fixation	0.18	0.108	0.18	0.108
1BMB-SLO-2	Limestone Storage Silo for Sludge Fixation	0.18	0.108	0.18	0.108
	Unpaved Roads	912	221	411	99.4
	Paved Roads	508	69.5	9.24	43.8
	Bead Blasting	38.3	10	38.3	10
	Painting for Maintenance	-	-	-	-
	Service Water Tanks	-	-	-	-
	Clearwell	-	-	-	-
Totals		**1,743**	**1,471**	**735**	**1,320**

Potential Emissions Inventory
Orlando Utilities Commission
Stanton Units 1 & 2

Source ID	Source Description	Sulfur Dioxide		Nitrogen Oxides	
		lb/hr	ton/yr	lb/hr	ton/yr
	Fossil Unit #1	4,963	20,652	2,482	10,869
BLR-1	Auxiliary Boiler #1	5.03E-02	2.20E-01	1.58E-02	6.91E-02
1ASB-SLO-1	#1 Fly Ash Silo - Collector 1	-	-	-	-
1ASB-SLO-1	#1 Fly Ash Silo - Collector 2	-	-	-	-
1ASB-SLO-1	#1 Fly Ash Silo - Silo Vent	-	-	-	-
CTW-1	Cooling Tower #1	-	-	-	-
	Fossil Unit #2	3,643	4,693	729	3,191
	#2 Fly Ash Silo - Collector 1	-	-	-	-
	#2 Fly Ash Silo - Collector 2	-	-	-	-
	#2 Fly Ash Silo - Silo Vent	-	-	-	-
	Cooling Tower #2	-	-	-	-
	Coal Car Unloading to Belt 1	-	-	-	-
	Belt 1 to Belt 2 Transfer	-	-	-	-
	Stacker/ Reclaimer Operation	-	-	-	-
1CHF-DCO-1	Transfer Building Dust Collector	-	-	-	-
1CHF-DCO-2	Crusher Building Dust Collector	-	-	-	-
	Emergency (Reserve) Stockout Transfer	-	-	-	-
1CHF-DCO-6	Emergency (Reserve) Reclaim Dust Collector	-	-	-	-
1CHF-DCO-3	Plant Transfer Dust Collector	-	-	-	-
	Coal Storage Pile Wind Erosion	-	-	-	-
	Coal Emergency Stockout Wind Erosion	-	-	-	-
	Limestone Receiving	-	-	-	-
	Limestone Reclaim	-	-	-	-
1CHF-DCO-4	Limestone Hopper (Day Bin) Dust Collector	-	-	-	-
	Limestone Storage Pile Wind Erosion	-	-	-	-
1BMB-SLO-1	Limestone Storage Silo for Sludge Fixation	-	-	-	-
1BMB-SLO-2	Limestone Storage Silo for Sludge Fixation	-	-	-	-
	Unpaved Roads	-	-	-	-
	Paved Roads	-	-	-	-
	Bead Blasting	-	-	-	-
	Painting for Maintenance	-	-	-	-
	Service Water Tanks	-	-	-	-
	Clearwell	-	-	-	-
	Totals	**8,606**	**25,345**	**3,211**	**14,060**

Potential Emissions Inventory
Orlando Utilities Commission
Stanton Units 1 & 2

Source ID	Source Description	Carbon Monoxide		Volatile Organic Compounds	
		lb/hr	ton/yr	lb/hr	ton/yr
	Fossil Unit #1	948	416	7.58	33.2
BLR-1	Auxiliary Boiler #1	3.42E-03	1.50E-02	1.37E-04	6.00E-04
1ASB-SLO-1	#1 Fly Ash Silo - Collector 1	-	-	-	-
1ASB-SLO-1	#1 Fly Ash Silo - Collector 2	-	-	-	-
1ASB-SLO-1	#1 Fly Ash Silo - Silo Vent	-	-	-	-
CTW-1	Cooling Tower #1	-	-	-	-
	Fossil Unit #2	643	2,816	64.3	282
	#2 Fly Ash Silo - Collector 1	-	-	-	-
	#2 Fly Ash Silo - Collector 2	-	-	-	-
	#2 Fly Ash Silo - Silo Vent	-	-	-	-
	Cooling Tower #2	-	-	-	-
	Coal Car Unloading to Belt 1	-	-	-	-
	Belt 1 to Belt 2 Transfer	-	-	-	-
	Stacker/ Reclaimer Operation	-	-	-	-
1CHF-DCO-1	Transfer Building Dust Collector	-	-	-	-
1CHF-DCO-2	Crusher Building Dust Collector	-	-	-	-
	Emergency (Reserve) Stockout Transfer	-	-	-	-
1CHF-DCO-6	Emergency (Reserve) Reclaim Dust Collector	-	-	-	-
1CHF-DCO-3	Plant Transfer Dust Collector	-	-	-	-
	Coal Storage Pile Wind Erosion	-	-	-	-
	Coal Emergency Stockout Wind Erosion	-	-	-	-
	Limestone Receiving	-	-	-	-
	Limestone Reclaim	-	-	-	-
1CHF-DCO-4	Limestone Hopper (Day Bin) Dust Collector	-	-	-	-
	Limestone Storage Pile Wind Erosion	-	-	-	-
1BMB-SLO-1	Limestone Storage Silo for Sludge Fixation	-	-	-	-
1BMB-SLO-2	Limestone Storage Silo for Sludge Fixation	-	-	-	-
	Unpaved Roads	-	-	-	-
	Paved Roads	-	-	-	-
	Bead Blasting	-	-	-	-
	Painting for Maintenance	-	-	47.4	12.3
	Service Water Tanks	-	-	-	-
	Clearwell	-	-	-	-
	Totals	**1,591**	**3,232**	**119.3**	**328**

Potential Emissions Inventory
Orlando Utilities Commission
Stanton Units 1 & 2

Source ID	Source Description	Arsenic		Beryllium	
		lb/hr	ton/yr	lb/hr	ton/yr
	Fossil Unit #1	4.67E-03	2.05E-02	7.04E-04	3.08E-03
BLR-1	Auxiliary Boiler #1	4.14E-07	1.81E-06	2.46E-07	1.08E-06
1ASB-SLO-1	#1 Fly Ash Silo - Collector 1	-	-	-	-
1ASB-SLO-1	#1 Fly Ash Silo - Collector 2	-	-	-	-
1ASB-SLO-1	#1 Fly Ash Silo - Silo Vent	-	-	-	-
CTW-1	Cooling Tower #1	-	-	-	-
	Fossil Unit #2	4.84E-03	2.12E-02	2.23E-02	9.77E-02
	#2 Fly Ash Silo - Collector 1	-	-	-	-
	#2 Fly Ash Silo - Collector 2	-	-	-	-
	#2 Fly Ash Silo - Silo Vent	-	-	-	-
	Cooling Tower #2	-	-	-	-
	Coal Car Unloading to Belt 1	-	-	-	-
	Belt 1 to Belt 2 Transfer	-	-	-	-
	Stacker/ Reclaimer Operation	-	-	-	-
1CHF-DCO-1	Transfer Building Dust Collector	-	-	-	-
1CHF-DCO-2	Crusher Building Dust Collector	-	-	-	-
	Emergency (Reserve) Stockout Transfer	-	-	-	-
1CHF-DCO-6	Emergency (Reserve) Reclaim Dust Collector	-	-	-	-
1CHF-DCO-3	Plant Transfer Dust Collector	-	-	-	-
	Coal Storage Pile Wind Erosion	-	-	-	-
	Coal Emergency Stockout Wind Erosion	-	-	-	-
	Limestone Receiving	-	-	-	-
	Limestone Reclaim	-	-	-	-
1CHF-DCO-4	Limestone Hopper (Day Bin) Dust Collector	-	-	-	-
	Limestone Storage Pile Wind Erosion	-	-	-	-
1BMB-SLO-1	Limestone Storage Silo for Sludge Fixation	-	-	-	-
1BMB-SLO-2	Limestone Storage Silo for Sludge Fixation	-	-	-	-
	Unpaved Roads	-	-	-	-
	Paved Roads	-	-	-	-
	Bead Blasting	-	-	-	-
	Painting for Maintenance				
	Service Water Tanks	-	-	-	-
	Clearwell	-	-	-	-
	Totals	**9.51E-03**	**4.17E-02**	**2.30E-02**	**1.01E-01**

Potential Emissions Inventory
Orlando Utilities Commission
Stanton Units 1 & 2

Source ID	Source Description	Cadmium		Chromium	
		lb/hr	ton/yr	lb/hr	ton/yr
	Fossil Unit #1	6.08E-04	2.66E-03	1.36E-02	5.97E-02
BLR-1	Auxiliary Boiler #1	1.08E-06	4.75E-06	6.60E-06	2.89E-05
1ASB-SLO-1	#1 Fly Ash Silo - Collector 1	-	-	-	-
1ASB-SLO-1	#1 Fly Ash Silo - Collector 2	-	-	-	-
1ASB-SLO-1	#1 Fly Ash Silo - Silo Vent	-	-	-	-
CTW-1	Cooling Tower #1	-	-	-	-
	Fossil Unit #2	6.30E-04	2.76E-03	1.41E-02	6.19E-02
	#2 Fly Ash Silo - Collector 1	-	-	-	-
	#2 Fly Ash Silo - Collector 2	-	-	-	-
	#2 Fly Ash Silo - Silo Vent	-	-	-	-
	Cooling Tower #2	-	-	-	-
	Coal Car Unloading to Belt 1	-	-	-	-
	Belt 1 to Belt 2 Transfer	-	-	-	-
	Stacker/ Reclaimer Operation	-	-	-	-
1CHF-DCO-1	Transfer Building Dust Collector	-	-	-	-
1CHF-DCO-2	Crusher Building Dust Collector	-	-	-	-
	Emergency (Reserve) Stockout Transfer	-	-	-	-
1CHF-DCO-6	Emergency (Reserve) Reclaim Dust Collector	-	-	-	-
1CHF-DCO-3	Plant Transfer Dust Collector	-	-	-	-
	Coal Storage Pile Wind Erosion	-	-	-	-
	Coal Emergency Stockout Wind Erosion	-	-	-	-
	Limestone Receiving	-	-	-	-
	Limestone Reclaim	-	-	-	-
1CHF-DCO-4	Limestone Hopper (Day Bin) Dust Collector	-	-	-	-
	Limestone Storage Pile Wind Erosion	-	-	-	-
1BMB-SLO-1	Limestone Storage Silo for Sludge Fixation	-	-	-	-
1BMB-SLO-2	Limestone Storage Silo for Sludge Fixation	-	-	-	-
	Unpaved Roads	-	-	-	-
	Paved Roads	-	-	-	-
	Bead Blasting	-	-	-	-
	Painting for Maintenance				
	Service Water Tanks	-	-	-	-
	Clearwell	-	-	-	-
	Totals	**1.24E-03**	**5.42E-03**	**2.77E-02**	**1.22E-01**

Potential Emissions Inventory
Orlando Utilities Commission
Stanton Units 1 & 2

Source ID	Source Description	Formaldehyde		Lead	
		lb/hr	ton/yr	lb/hr	ton/yr
	Fossil Unit #1	4.63E-01	2.03E+00	4.40E-03	1.93E-02
BLR-1	Auxiliary Boiler #1	-	-	8.77E-07	3.84E-06
1ASB-SLO-1	#1 Fly Ash Silo - Collector 1	-	-	-	-
1ASB-SLO-1	#1 Fly Ash Silo - Collector 2	-	-	-	-
1ASB-SLO-1	#1 Fly Ash Silo - Silo Vent	-	-	-	-
CTW-1	Cooling Tower #1	-	-	-	-
	Fossil Unit #2	4.80E-01	2.10E+00	6.43E-01	2.82E+00
	#2 Fly Ash Silo - Collector 1	-	-	-	-
	#2 Fly Ash Silo - Collector 2	-	-	-	-
	#2 Fly Ash Silo - Silo Vent	-	-	-	-
	Cooling Tower #2	-	-	-	-
	Coal Car Unloading to Belt 1	-	-	-	-
	Belt 1 to Belt 2 Transfer	-	-	-	-
	Stacker/ Reclaimer Operation	-	-	-	-
1CHF-DCO-1	Transfer Building Dust Collector	-	-	-	-
1CHF-DCO-2	Crusher Building Dust Collector	-	-	-	-
	Emergency (Reserve) Stockout Transfer	-	-	-	-
1CHF-DCO-6	Emergency (Reserve) Reclaim Dust Collector	-	-	-	-
1CHF-DCO-3	Plant Transfer Dust Collector	-	-	-	-
	Coal Storage Pile Wind Erosion	-	-	-	-
	Coal Emergency Stockout Wind Erosion	-	-	-	-
	Limestone Receiving	-	-	-	-
	Limestone Reclaim	-	-	-	-
1CHF-DCO-4	Limestone Hopper (Day Bin) Dust Collector	-	-	-	-
	Limestone Storage Pile Wind Erosion	-	-	-	-
1BMB-SLO-1	Limestone Storage Silo for Sludge Fixation	-	-	-	-
1BMB-SLO-2	Limestone Storage Silo for Sludge Fixation	-	-	-	-
	Unpaved Roads	-	-	-	-
	Paved Roads	-	-	-	-
	Bead Blasting	-	-	-	-
	Painting for Maintenance				
	Service Water Tanks	-	-	-	-
	Clearwell	-	-	-	-
	Totals	**9.43E-01**	**4.13E+00**	**6.47E-01**	**2.84E+00**

Potential Emissions Inventory
Orlando Utilities Commission
Stanton Units 1 & 2

Source ID	Source Description	Manganese		Mercury	
		lb/hr	ton/yr	lb/hr	ton/yr
	Fossil Unit #1	2.59E-02	1.13E-01	6.62E-02	2.91E-01
BLR-1	Auxiliary Boiler #1	1.38E-06	6.05E-06	2.96E-06	1.30E-06
1ASB-SLO-1	#1 Fly Ash Silo - Collector 1	-	-	-	-
1ASB-SLO-1	#1 Fly Ash Silo - Collector 2	-	-	-	-
1ASB-SLO-1	#1 Fly Ash Silo - Silo Vent	-	-	-	-
CTW-1	Cooling Tower #1	-	-	-	-
	Fossil Unit #2	2.68E-02	1.17E-01	4.71E-02	2.07E-01
	#2 Fly Ash Silo - Collector 1	-	-	-	-
	#2 Fly Ash Silo - Collector 2	-	-	-	-
	#2 Fly Ash Silo - Silo Vent	-	-	-	-
	Cooling Tower #2	-	-	-	-
	Coal Car Unloading to Belt 1	-	-	-	-
	Belt 1 to Belt 2 Transfer	-	-	-	-
	Stacker/ Reclaimer Operation	-	-	-	-
1CHF-DCO-1	Transfer Building Dust Collector	-	-	-	-
1CHF-DCO-2	Crusher Building Dust Collector	-	-	-	-
	Emergency (Reserve) Stockout Transfer	-	-	-	-
1CHF-DCO-6	Emergency (Reserve) Reclaim Dust Collector	-	-	-	-
1CHF-DCO-3	Plant Transfer Dust Collector	-	-	-	-
	Coal Storage Pile Wind Erosion	-	-	-	-
	Coal Emergency Stockout Wind Erosion	-	-	-	-
	Limestone Receiving	-	-	-	-
	Limestone Reclaim	-	-	-	-
1CHF-DCO-4	Limestone Hopper (Day Bin) Dust Collector	-	-	-	-
	Limestone Storage Pile Wind Erosion	-	-	-	-
1BMB-SLO-1	Limestone Storage Silo for Sludge Fixation	-	-	-	-
1BMB-SLO-2	Limestone Storage Silo for Sludge Fixation	-	-	-	-
	Unpaved Roads	-	-	-	-
	Paved Roads	-	-	-	-
	Bead Blasting	-	-	-	-
	Painting for Maintenance				
	Service Water Tanks	-	-	-	-
	Clearwell	-	-	-	-
	Totals	**5.27E-02**	**2.30E-01**	**1.13E-01**	**4.98E-01**

Potential Emissions Inventory
Orlando Utilities Commission
Stanton Units 1 & 2

Source ID	Source Description	Nickel lb/hr	Nickel ton/yr	Fluorides lb/hr	Fluorides ton/yr
	Fossil Unit #1	1.12E-02	4.91E-02	-	-
BLR-1	Auxiliary Boiler #1	1.68E-05	7.34E-05	-	-
1ASB-SLO-1	#1 Fly Ash Silo - Collector 1	-	-	-	-
1ASB-SLO-1	#1 Fly Ash Silo - Collector 2	-	-	-	-
1ASB-SLO-1	#1 Fly Ash Silo - Silo Vent	-	-	-	-
CTW-1	Cooling Tower #1	-	-	-	-
	Fossil Unit #2	1.16E-02	5.09E-02	1.80E+00	7.89E+00
	#2 Fly Ash Silo - Collector 1	-	-	-	-
	#2 Fly Ash Silo - Collector 2	-	-	-	-
	#2 Fly Ash Silo - Silo Vent	-	-	-	-
	Cooling Tower #2	-	-	-	-
	Coal Car Unloading to Belt 1	-	-	-	-
	Belt 1 to Belt 2 Transfer	-	-	-	-
	Stacker/ Reclaimer Operation	-	-	-	-
1CHF-DCO-1	Transfer Building Dust Collector	-	-	-	-
1CHF-DCO-2	Crusher Building Dust Collector	-	-	-	-
	Emergency (Reserve) Stockout Transfer	-	-	-	-
1CHF-DCO-6	Emergency (Reserve) Reclaim Dust Collecto	-	-	-	-
1CHF-DCO-3	Plant Transfer Dust Collector	-	-	-	-
	Coal Storage Pile Wind Erosion	-	-	-	-
	Coal Emergency Stockout Wind Erosion	-	-	-	-
	Limestone Receiving	-	-	-	-
	Limestone Reclaim	-	-	-	-
1CHF-DCO-4	Limestone Hopper (Day Bin) Dust Collector	-	-	-	-
	Limestone Storage Pile Wind Erosion	-	-	-	-
1BMB-SLO-1	Limestone Storage Silo for Sludge Fixation	-	-	-	-
1BMB-SLO-2	Limestone Storage Silo for Sludge Fixation	-	-	-	-
	Unpaved Roads	-	-	-	-
	Paved Roads	-	-	-	-
	Bead Blasting	-	-	-	-
	Painting for Maintenance				
	Service Water Tanks	-	-	-	-
	Clearwell	-	-	-	-
	Totals	**2.28E-02**	**1.00E-01**	**1.80E+00**	**7.89E+00**

Potential Emissions Inventory
Orlando Utilities Commission
Stanton Units 1 & 2

Source ID	Source Description	Chlorine	
		lb/hr	ton/yr
	Fossil Unit #1	-	-
BLR-1	Auxiliary Boiler #1	-	-
1ASB-SLO-1	#1 Fly Ash Silo - Collector 1	-	-
1ASB-SLO-1	#1 Fly Ash Silo - Collector 2	-	-
1ASB-SLO-1	#1 Fly Ash Silo - Silo Vent	-	-
CTW-1	Cooling Tower #1	0.486	2.13
	Fossil Unit #2	-	-
	#2 Fly Ash Silo - Collector 1	-	-
	#2 Fly Ash Silo - Collector 2	-	-
	#2 Fly Ash Silo - Silo Vent	-	-
	Cooling Tower #2	0.486	2.13
	Coal Car Unloading to Belt 1	-	-
	Belt 1 to Belt 2 Transfer	-	-
	Stacker/ Reclaimer Operation	-	-
1CHF-DCO-1	Transfer Building Dust Collector	-	-
1CHF-DCO-2	Crusher Building Dust Collector	-	-
	Emergency (Reserve) Stockout Transfer	-	-
1CHF-DCO-6	Emergency (Reserve) Reclaim Dust Collector	-	-
1CHF-DCO-3	Plant Transfer Dust Collector	-	-
	Coal Storage Pile Wind Erosion	-	-
	Coal Emergency Stockout Wind Erosion	-	-
	Limestone Receiving	-	-
	Limestone Reclaim	-	-
1CHF-DCO-4	Limestone Hopper (Day Bin) Dust Collector	-	-
	Limestone Storage Pile Wind Erosion	-	-
1BMB-SLO-1	Limestone Storage Silo for Sludge Fixation	-	-
1BMB-SLO-2	Limestone Storage Silo for Sludge Fixation	-	-
	Unpaved Roads	-	-
	Paved Roads	-	-
	Bead Blasting	-	-
	Painting for Maintenance		
	Service Water Tanks	1.56	6.85
	Clearwell	1.56	6.85
	Totals	**4.09E+00**	**1.80E+01**

CONVERSION FACTORS

$\mathrm{MMBtu} := 1000000 \cdot \mathrm{BTU}$

$\mathrm{Btu} := \mathrm{BTU}$

$\mathrm{bbl} := 42 \cdot \mathrm{gal}$

$\mathrm{MMscf} := 1000000 \cdot \mathrm{scf}$

$\mathrm{acfm} := \mathrm{cfm}$

$\mathrm{acf} := \mathrm{scf}$

$\mathrm{week} := 7 \cdot \mathrm{day}$

$\mathrm{cfm} := \dfrac{\mathrm{ft}^3}{\mathrm{min}}$ $\quad \mathrm{gr} := \dfrac{\mathrm{lb}}{7000}$ $\quad \mathrm{tpy} := \dfrac{\mathrm{ton}}{\mathrm{yr}}$ $\quad \mathrm{scf} := \mathrm{ft}^3$

$\mathrm{ppm} := \dfrac{1}{1000000}$ $\quad \mathrm{tph} := \dfrac{\mathrm{ton}}{\mathrm{hr}}$ $\quad \mathrm{gpm} := \dfrac{\mathrm{gal}}{\mathrm{min}}$

$\mathrm{month} := \dfrac{\mathrm{yr}}{12}$

Fossil Unit # 1

Permit Restrictions:

Btu 4136 MMBtu/hr
Operating Hours: 8760 hr/yr
0.02 gr/acf baghouses

Oil emission limits, No 6 F.O.
0.80 lb/MMBtu SO2
0.03 lb/MMBtu PM

Oil emissions limits, per Btu, are less than coal limits.

$$\mathbf{SO2} := 1.2 \cdot \frac{\mathbf{lb}}{\mathbf{MMBtu}} \cdot 4136 \cdot \frac{\mathbf{MMBtu}}{\mathbf{hr}} \qquad \mathbf{SO2} = 4963 \cdot \frac{\mathbf{lb}}{\mathbf{hr}} \qquad \text{(2-hr)}$$

$$\mathbf{SO2} := 1.14 \cdot \frac{\mathbf{lb}}{\mathbf{MMBtu}} \cdot 4136 \cdot \frac{\mathbf{MMBtu}}{\mathbf{hr}} \cdot 8760 \cdot \frac{\mathbf{hr}}{\mathbf{yr}} \qquad \mathbf{SO2} = 20652 \cdot \mathbf{tpy} \qquad \text{(3-hr)}$$

$$\mathbf{NOx} := 0.6 \cdot \frac{\mathbf{lb}}{\mathbf{MMBtu}} \cdot 4136 \cdot \frac{\mathbf{MMBtu}}{\mathbf{hr}} \qquad \mathbf{NOx} = 2481.6 \cdot \frac{\mathbf{lb}}{\mathbf{hr}} \qquad \mathbf{NOx} \cdot 8760 \cdot \frac{\mathbf{hr}}{\mathbf{yr}} = 10869 \cdot \mathbf{tpy}$$

$$\mathbf{PM} := 0.03 \cdot \frac{\mathbf{lb}}{\mathbf{MMBtu}} \cdot 4136 \cdot \frac{\mathbf{MMBtu}}{\mathbf{hr}} \qquad \mathbf{PM} = 124.1 \cdot \frac{\mathbf{lb}}{\mathbf{hr}} \qquad \mathbf{PM} \cdot 8760 \cdot \frac{\mathbf{hr}}{\mathbf{yr}} = 543.5 \cdot \mathbf{tpy}$$

Assume PM10 = PM

Fossil Unit # 1

Emissions per AP-42, 5th Ed., pulverized coal, tangential fired, wet bottom

Coal Parameters: S% = 3.5% to 4.0%
Ash = 15.5% to 18.5%, typ. 16.5%
Btu/lb = 10,900 to 11,300, typ 11,000
% Moisture = 6.5 to 8.5

No. 6 Fuel Oil: S=0.7%
Btu/lb = 17,500 to 19,000

No. 2 Fuel Oil S=0.3%
Btu/lb = 18,500 to 20,000

Permit Restrictions:

Controls: Wet Limestone Scrubbing.
ESP

Btu 4136 MMBtu/hr
Operating Hours: 8760 hr/yr

% solids removed as bottom ash/fly ash

$$\mathbf{Ash} := 4136 \cdot \frac{\mathbf{MMBtu}}{\mathbf{hr}} \cdot \frac{\mathbf{lb}}{10900 \cdot \mathbf{Btu}} \cdot 15.5 \cdot \% \qquad \mathbf{Ash} = 58815 \cdot \frac{\mathbf{lb}}{\mathbf{hr}}$$

total ash rate, uncontrolled.

$$\mathbf{Solids\_Removed} := 1 - \left(\frac{\mathbf{PM}}{\mathbf{Ash}}\right) \qquad \mathbf{Solids\_Removed} = 99.79 \cdot \%$$

Calculations below determine potential emissions of carbon monoxide and VOC, based on AP-42. These calculations are not required for Unit # 2, because Unit # 2 has regulatory limits for those pollutants.

$$\mathbf{MaxCoal} := 4136 \cdot \frac{\mathbf{MMBtu}}{\mathbf{hr}} \cdot \frac{\mathbf{lb}}{10900 \cdot \mathbf{Btu}} \cdot 8760 \cdot \frac{\mathbf{hr}}{\mathbf{yr}} \qquad \mathbf{MaxCoal} = 1661989 \cdot \mathbf{tpy}$$

$$\mathbf{CO} := 0.5 \cdot \frac{\mathbf{lb}}{\mathbf{ton}} \cdot \mathbf{MaxCoal} \qquad \mathbf{CO} = 415.5 \cdot \mathbf{tpy} \qquad 10 \cdot \mathbf{CO} = 948 \cdot \frac{\mathbf{lb}}{\mathbf{hr}}$$

AP-42 Table 1.1-1 note d

$$\mathbf{NMTOC} := 0.04 \cdot \frac{\mathbf{lb}}{\mathbf{ton}} \cdot \mathbf{MaxCoal} \qquad \mathbf{NMTOC} = 33.24 \cdot \mathbf{tpy} \qquad \mathbf{NMTOC} = 7.584 \cdot \frac{\mathbf{lb}}{\mathbf{hr}}$$

Fossil Unit # 1

Trace elements, etc. from AP42, 5th ed. (Rating "E"). Solids Removal efficiency considered conservative, since it includes bottom ash and fly ash, whereas AP42 includes only flue emissions.

$$\mathbf{As} := 538\cdot\frac{\mathbf{lb}}{10^{12}\cdot\mathbf{Btu}}\cdot 4136\cdot\frac{\mathbf{MMBtu}}{\mathbf{hr}}\cdot(1 - 0.9979\mathbf{As} = 4.67\cdot 10^{-3}\ \cdot\frac{\mathbf{lb}}{\mathbf{hr}} \qquad \mathbf{As}\cdot 8760\cdot\frac{\mathbf{hr}}{\mathbf{yr}} = 2.05\cdot 10^{-2}\ \cdot\mathbf{tpy}$$

$$\mathbf{Be} := 81\cdot\frac{\mathbf{lb}}{10^{12}\cdot\mathbf{Btu}}\cdot 4136\cdot\frac{\mathbf{MMBtu}}{\mathbf{hr}}\cdot(1 - 0.9979)\,\mathbf{Be} = 7.04\cdot 10^{-4}\ \cdot\frac{\mathbf{lb}}{\mathbf{hr}} \qquad \mathbf{Be}\cdot 8760\cdot\frac{\mathbf{hr}}{\mathbf{yr}} = 3.08\cdot 10^{-3}\ \cdot\mathbf{tpy}$$

$$\mathbf{Cd} := 70\cdot\frac{\mathbf{lb}}{10^{12}\cdot\mathbf{Btu}}\cdot 4136\cdot\frac{\mathbf{MMBtu}}{\mathbf{hr}}\cdot(1 - 0.9979)\mathbf{Cd} = 6.08\cdot 10^{-4}\ \cdot\frac{\mathbf{lb}}{\mathbf{hr}} \qquad \mathbf{Cd}\cdot 8760\cdot\frac{\mathbf{hr}}{\mathbf{yr}} = 2.66\cdot 10^{-3}\ \cdot\mathbf{tpy}$$

$$\mathbf{Cr} := 1570\cdot\frac{\mathbf{lb}}{10^{12}\cdot\mathbf{Btu}}\cdot 4136\cdot\frac{\mathbf{MMBtu}}{\mathbf{hr}}\cdot(1 - 0.997\mathbf{Cr} = 1.36\cdot 10^{-2}\ \cdot\frac{\mathbf{lb}}{\mathbf{hr}} \qquad \mathbf{Cr}\cdot 8760\cdot\frac{\mathbf{hr}}{\mathbf{yr}} = 5.97\cdot 10^{-2}\ \cdot\mathbf{tpy}$$

$$\mathbf{Pb} := 507\cdot\frac{\mathbf{lb}}{10^{12}\cdot\mathbf{Btu}}\cdot 4136\cdot\frac{\mathbf{MMBtu}}{\mathbf{hr}}\cdot(1 - 0.9979\mathbf{Pb} = 4.4\cdot 10^{-3}\ \cdot\frac{\mathbf{lb}}{\mathbf{hr}} \qquad \mathbf{Pb}\cdot 8760\cdot\frac{\mathbf{hr}}{\mathbf{yr}} = 1.93\cdot 10^{-2}\ \cdot\mathbf{tpy}$$

$$\mathbf{Mn} := 2980\cdot\frac{\mathbf{lb}}{10^{12}\cdot\mathbf{Btu}}\cdot 4136\cdot\frac{\mathbf{MMBtu}}{\mathbf{hr}}\cdot(1 - 0.99\mathbf{Mn} = 2.59\cdot 10^{-2}\ \cdot\frac{\mathbf{lb}}{\mathbf{hr}} \qquad \mathbf{Mn}\cdot 8760\cdot\frac{\mathbf{hr}}{\mathbf{yr}} = 1.13\cdot 10^{-1}\ \cdot\mathbf{tpy}$$

$$\mathbf{Hg} := 16\cdot\frac{\mathbf{lb}}{10^{12}\cdot\mathbf{Btu}}\cdot 4136\cdot\frac{\mathbf{MMBtu}}{\mathbf{hr}} \qquad \mathbf{Hg} = 6.62\cdot 10^{-2}\ \cdot\frac{\mathbf{lb}}{\mathbf{hr}} \qquad \mathbf{Hg}\cdot 8760\cdot\frac{\mathbf{hr}}{\mathbf{yr}} = 2.9\cdot 10^{-1}\ \cdot\mathbf{tpy}$$

$$\mathbf{Ni} := 1290\cdot\frac{\mathbf{lb}}{10^{12}\cdot\mathbf{Btu}}\cdot 4136\cdot\frac{\mathbf{MMBtu}}{\mathbf{hr}}\cdot(1 - 0.997\mathbf{Ni} = 1.12\cdot 10^{-2}\ \cdot\frac{\mathbf{lb}}{\mathbf{hr}} \qquad \mathbf{Ni}\cdot 8760\cdot\frac{\mathbf{hr}}{\mathbf{yr}} = 4.91\cdot 10^{-2}\ \cdot\mathbf{tpy}$$

$$\mathbf{HCOH} := 112\cdot\frac{\mathbf{lb}}{10^{12}\cdot\mathbf{Btu}}\cdot 4136\cdot\frac{\mathbf{MMBtu}}{\mathbf{hr}} \qquad \mathbf{HCOH} = 4.63\cdot 10^{-1}\ \cdot\frac{\mathbf{lb}}{\mathbf{hr}} \qquad \mathbf{HCOH}\cdot 8760\cdot\frac{\mathbf{hr}}{\mathbf{yr}} = 2.03\ \cdot\mathbf{tpy}$$

HCOH: No data for wet bottom, used "Pulverized coal, configuration unknown"

Fossil Unit # 2

Permit Restrictions:

Btu 4286 MMBtu/hr
Operating Hours: 8760 hr/yr
0.02 gr/acf baghouses

Oil emission limits, No 2 F.O.
0..51 lb/MMBtu SO2
0.015 lb/MMBtu PM
0.16 lb/MMBtu NOx

Oil emissions limits, per Btu, are less than coal limits.

$\mathbf{SO2} := 0.85 \cdot \frac{\mathbf{lb}}{\mathbf{MMBtu}} \cdot 4286 \cdot \frac{\mathbf{MMBtu}}{\mathbf{hr}}$ $\quad \mathbf{SO2} = 3643 \cdot \frac{\mathbf{lb}}{\mathbf{hr}}$ $\quad$ (3-hr)

$\mathbf{SO2} := 0.25 \cdot \frac{\mathbf{lb}}{\mathbf{MMBtu}} \cdot 4286 \cdot \frac{\mathbf{MMBtu}}{\mathbf{hr}} \cdot 8760 \cdot \frac{\mathbf{hr}}{\mathbf{yr}}$ $\quad \mathbf{SO2} = 4693 \cdot \mathbf{tpy}$ $\quad$ (30-Day)

$\mathbf{NOx} := 0.17 \cdot \frac{\mathbf{lb}}{\mathbf{MMBtu}} \cdot 4286 \cdot \frac{\mathbf{MMBtu}}{\mathbf{hr}}$ $\quad \mathbf{NOx} = 728.6 \cdot \frac{\mathbf{lb}}{\mathbf{hr}}$ $\quad \mathbf{NOx} \cdot 8760 \cdot \frac{\mathbf{hr}}{\mathbf{yr}} = 3191 \cdot \mathbf{tpy}$

$\mathbf{PM} := 0.02 \cdot \frac{\mathbf{lb}}{\mathbf{MMBtu}} \cdot 4286 \cdot \frac{\mathbf{MMBtu}}{\mathbf{hr}}$ $\quad \mathbf{PM} = 85.7 \cdot \frac{\mathbf{lb}}{\mathbf{hr}}$ $\quad \mathbf{PM} \cdot 8760 \cdot \frac{\mathbf{hr}}{\mathbf{yr}} = 375.5 \cdot \mathbf{tpy}$

Assume PM10 = PM

$\mathbf{CO} := 0.15 \cdot \frac{\mathbf{lb}}{\mathbf{MMBtu}} \cdot 4286 \cdot \frac{\mathbf{MMBtu}}{\mathbf{hr}}$ $\quad \mathbf{CO} = 642.9 \cdot \frac{\mathbf{lb}}{\mathbf{hr}}$ $\quad \mathbf{CO} \cdot 8760 \cdot \frac{\mathbf{hr}}{\mathbf{yr}} = 2815.9 \cdot \mathbf{tpy}$

$\mathbf{H2SO4} := 0.033 \cdot \frac{\mathbf{lb}}{\mathbf{MMBtu}} \cdot 4286 \cdot \frac{\mathbf{MMBtu}}{\mathbf{hr}}$ $\quad \mathbf{H2SO4} = 141.4 \cdot \frac{\mathbf{lb}}{\mathbf{hr}}$ $\quad \mathbf{H2SO4} \cdot 8760 \cdot \frac{\mathbf{hr}}{\mathbf{yr}} = 619.5 \cdot \mathbf{tpy}$

$\mathbf{VOC} := 0.015 \cdot \frac{\mathbf{lb}}{\mathbf{MMBtu}} \cdot 4286 \cdot \frac{\mathbf{MMBtu}}{\mathbf{hr}}$ $\quad \mathbf{VOC} = 64.3 \cdot \frac{\mathbf{lb}}{\mathbf{hr}}$ $\quad \mathbf{VOC} \cdot 8760 \cdot \frac{\mathbf{hr}}{\mathbf{yr}} = 281.6 \cdot \mathbf{tpy}$

$\mathbf{Be} := 5.2 \cdot 10^{-6} \cdot \frac{\mathbf{lb}}{\mathbf{MMBtu}} \cdot 4286 \cdot \frac{\mathbf{MMBtu}}{\mathbf{hr}}$ $\quad \mathbf{Be} = 2.23 \cdot 10^{-2} \cdot \frac{\mathbf{lb}}{\mathbf{hr}}$ $\quad \mathbf{Be} = 9.77 \cdot 10^{-2} \cdot \mathbf{tpy}$

$\mathbf{Hg} := 1.1 \cdot 10^{-5} \cdot \frac{\mathbf{lb}}{\mathbf{MMBtu}} \cdot 4286 \cdot \frac{\mathbf{MMBtu}}{\mathbf{hr}}$ $\quad \mathbf{Hg} = 4.71 \cdot 10^{-2} \cdot \frac{\mathbf{lb}}{\mathbf{hr}}$ $\quad \mathbf{Hg} = 2.07 \cdot 10^{-1} \cdot \mathbf{tpy}$

$\mathbf{Pb} := 1.5 \cdot 10^{-4} \cdot \frac{\mathbf{lb}}{\mathbf{MMBtu}} \cdot 4286 \cdot \frac{\mathbf{MMBtu}}{\mathbf{hr}}$ $\quad \mathbf{Pb} = 6.43 \cdot 10^{-1} \cdot \frac{\mathbf{lb}}{\mathbf{hr}}$ $\quad \mathbf{Pb} = 2.82 \cdot \mathbf{tpy}$

$\mathbf{Fluorides} := 4.2 \cdot 10^{-4} \cdot \frac{\mathbf{lb}}{\mathbf{MMBtu}} \cdot 4286 \cdot \frac{\mathbf{MMBtu}}{\mathbf{hr}}$ $\quad \mathbf{Fluorides} = 1.8 \cdot \frac{\mathbf{lb}}{\mathbf{hr}}$

$\mathbf{Fluorides} = 7.89 \cdot \mathbf{tpy}$

Fossil Unit # 2

Trace elements, etc. from AP42, 5th ed. (Rating "E"). Solids Removal efficiency considered conservative, since it includes bottom ash and fly ash, whereas AP42 includes only flue emissions.

$$\mathbf{As} := 538\cdot\frac{\mathbf{lb}}{10^{12}\cdot\mathbf{Btu}}\cdot 4286\cdot\frac{\mathbf{MMBtu}}{\mathbf{hr}}\cdot(1 - 0.9979\mathbf{As} = 4.84\cdot 10^{-3}\ \cdot\frac{\mathbf{lb}}{\mathbf{hr}} \quad \mathbf{As}\cdot 8760\cdot\frac{\mathbf{hr}}{\mathbf{yr}} = 2.12\cdot 10^{-2}\ \cdot\mathbf{tpy}$$

$$\mathbf{Cd} := 70\cdot\frac{\mathbf{lb}}{10^{12}\cdot\mathbf{Btu}}\cdot 4286\cdot\frac{\mathbf{MMBtu}}{\mathbf{hr}}\cdot(1 - 0.9979)\mathbf{Cd} = 6.3\cdot 10^{-4}\ \cdot\frac{\mathbf{lb}}{\mathbf{hr}} \quad \mathbf{Cd}\cdot 8760\cdot\frac{\mathbf{hr}}{\mathbf{yr}} = 2.76\cdot 10^{-3}\ \cdot\mathbf{tpy}$$

$$\mathbf{Cr} := 1570\cdot\frac{\mathbf{lb}}{10^{12}\cdot\mathbf{Btu}}\cdot 4286\cdot\frac{\mathbf{MMBtu}}{\mathbf{hr}}\cdot(1 - 0.997\mathbf{Cr} = 1.41\cdot 10^{-2}\ \cdot\frac{\mathbf{lb}}{\mathbf{hr}} \quad \mathbf{Cr}\cdot 8760\cdot\frac{\mathbf{hr}}{\mathbf{yr}} = 6.19\cdot 10^{-2}\ \cdot\mathbf{tpy}$$

$$\mathbf{Mn} := 2980\cdot\frac{\mathbf{lb}}{10^{12}\cdot\mathbf{Btu}}\cdot 4286\cdot\frac{\mathbf{MMBtu}}{\mathbf{hr}}\cdot(1 - 0.99\mathbf{Mn} = 2.68\cdot 10^{-2}\ \cdot\frac{\mathbf{lb}}{\mathbf{hr}} \quad \mathbf{Mn}\cdot 8760\cdot\frac{\mathbf{hr}}{\mathbf{yr}} = 1.17\cdot 10^{-1}\ \cdot\mathbf{tpy}$$

$$\mathbf{Ni} := 1290\cdot\frac{\mathbf{lb}}{10^{12}\cdot\mathbf{Btu}}\cdot 4286\cdot\frac{\mathbf{MMBtu}}{\mathbf{hr}}\cdot(1 - 0.997\mathbf{Ni} = 1.16\cdot 10^{-2}\ \cdot\frac{\mathbf{lb}}{\mathbf{hr}} \quad \mathbf{Ni}\cdot 8760\cdot\frac{\mathbf{hr}}{\mathbf{yr}} = 5.09\cdot 10^{-2}\ \cdot\mathbf{tpy}$$

$$\mathbf{HCOH} := 112\cdot\frac{\mathbf{lb}}{10^{12}\cdot\mathbf{Btu}}\cdot 4286\cdot\frac{\mathbf{MMBtu}}{\mathbf{hr}} \quad \mathbf{HCOH} = 4.8\cdot 10^{-1}\ \cdot\frac{\mathbf{lb}}{\mathbf{hr}} \quad \mathbf{HCOH}\cdot 8760\cdot\frac{\mathbf{hr}}{\mathbf{yr}} = 2.1\ \cdot\mathbf{tpy}$$

HCOH: No data for wet bottom, used "Pulverized coal, configuration unknown"

Auxiliary Boiler - One Common for Both Fossil Units

Permit restrictions for Auxiliary Boiler
No. 2. Fuel Oil emission limits:
PM 0.015 lb/MMBtu
SO2 0.51 lb/MMBtu (based on 0.5% S)
NOx 0.16 lb/MMBtu

$$\mathbf{Oil} := 6000 \cdot \frac{\mathbf{gal}}{\mathbf{yr}}$$

$$\mathbf{SO2} := 6000 \cdot \frac{\mathbf{gal}}{\mathbf{yr}} \cdot 144000 \cdot \frac{\mathbf{Btu}}{\mathbf{gal}} \cdot 0.51 \cdot \frac{\mathbf{lb}}{\mathbf{MMBtu}} \qquad \mathbf{SO2} = 2.2 \cdot 10^{-1} \cdot \mathbf{tpy} \qquad \mathbf{SO2} = 5.03 \cdot 10^{-2} \cdot \frac{\mathbf{lb}}{\mathbf{hr}}$$

$$\mathbf{PM} := 6000 \cdot \frac{\mathbf{gal}}{\mathbf{yr}} \cdot 144000 \cdot \frac{\mathbf{Btu}}{\mathbf{gal}} \cdot 0.015 \cdot \frac{\mathbf{lb}}{\mathbf{MMBtu}} \qquad \mathbf{PM} = 6.48 \cdot 10^{-3} \cdot \mathbf{tpy} \qquad \mathbf{PM} = 1.48 \cdot 10^{-3} \cdot \frac{\mathbf{lb}}{\mathbf{hr}}$$

$$\mathbf{NOx} := 6000 \cdot \frac{\mathbf{gal}}{\mathbf{yr}} \cdot 144000 \cdot \frac{\mathbf{Btu}}{\mathbf{gal}} \cdot 0.16 \cdot \frac{\mathbf{lb}}{\mathbf{MMBtu}} \qquad \mathbf{NOx} = 6.91 \cdot 10^{-2} \cdot \mathbf{tpy} \qquad \mathbf{NOx} = 1.58 \cdot 10^{-2} \cdot \frac{\mathbf{lb}}{\mathbf{hr}}$$

Assume PM10 = PM

CO Emissions (AP42, 5th ed.)

$$\mathbf{CO} := 5 \cdot \frac{\mathbf{lb}}{1000 \cdot \mathbf{gal}} \cdot \mathbf{Oil} \qquad \mathbf{CO} = 3.42 \cdot 10^{-3} \cdot \frac{\mathbf{lb}}{\mathbf{hr}} \qquad \mathbf{CO} = 1.5 \cdot 10^{-2} \cdot \mathbf{tpy}$$

Non-Methane TOC Emissions (AP-42, 5th ed.)

$$\mathbf{TOC} := 0.2 \cdot \frac{\mathbf{lb}}{1000 \cdot \mathbf{gal}} \cdot \mathbf{Oil} \qquad \mathbf{TOC} = 1.37 \cdot 10^{-4} \cdot \frac{\mathbf{lb}}{\mathbf{hr}} \qquad \mathbf{TOC} = 6 \cdot 10^{-4} \cdot \mathbf{tpy}$$

Auxiliary Boiler - One Common for Both Fossil Units

Trace Elements (AP-42, 5th ed., high end of range)

$\mathbf{As} := 4.2 \cdot \frac{\mathbf{lb}}{10^{12} \cdot \mathbf{Btu}} \cdot 144000 \cdot \frac{\mathbf{Btu}}{\mathbf{gal}} \cdot \mathbf{Oil}$ $\mathbf{As} = 4.14 \cdot 10^{-7} \cdot \frac{\mathbf{lb}}{\mathbf{hr}}$ $\mathbf{As} = 1.81 \cdot 10^{-6} \cdot \mathbf{tpy}$

$\mathbf{Be} := 2.5 \cdot \frac{\mathbf{lb}}{10^{12} \cdot \mathbf{Btu}} \cdot 144000 \cdot \frac{\mathbf{Btu}}{\mathbf{gal}} \cdot \mathbf{Oil}$ $\mathbf{Be} = 2.46 \cdot 10^{-7} \cdot \frac{\mathbf{lb}}{\mathbf{hr}}$ $\mathbf{Be} = 1.08 \cdot 10^{-6} \cdot \mathbf{tpy}$

$\mathbf{Cd} := 11 \cdot \frac{\mathbf{lb}}{10^{12} \cdot \mathbf{Btu}} \cdot 144000 \cdot \frac{\mathbf{Btu}}{\mathbf{gal}} \cdot \mathbf{Oil}$ $\mathbf{Cd} = 1.08 \cdot 10^{-6} \cdot \frac{\mathbf{lb}}{\mathbf{hr}}$ $\mathbf{Cd} = 4.75 \cdot 10^{-6} \cdot \mathbf{tpy}$

$\mathbf{Cr} := 67 \cdot \frac{\mathbf{lb}}{10^{12} \cdot \mathbf{Btu}} \cdot 144000 \cdot \frac{\mathbf{Btu}}{\mathbf{gal}} \cdot \mathbf{Oil}$ $\mathbf{Cr} = 6.6 \cdot 10^{-6} \cdot \frac{\mathbf{lb}}{\mathbf{hr}}$ $\mathbf{Cr} = 2.89 \cdot 10^{-5} \cdot \mathbf{tpy}$

$\mathbf{Pb} := 8.9 \cdot \frac{\mathbf{lb}}{10^{12} \cdot \mathbf{Btu}} \cdot 144000 \cdot \frac{\mathbf{Btu}}{\mathbf{gal}} \cdot \mathbf{Oil}$ $\mathbf{Pb} = 8.77 \cdot 10^{-7} \cdot \frac{\mathbf{lb}}{\mathbf{hr}}$ $\mathbf{Pb} = 3.84 \cdot 10^{-6} \cdot \mathbf{tpy}$

$\mathbf{Mn} := 14 \cdot \frac{\mathbf{lb}}{10^{12} \cdot \mathbf{Btu}} \cdot 144000 \cdot \frac{\mathbf{Btu}}{\mathbf{gal}} \cdot \mathbf{Oil}$ $\mathbf{Mn} = 1.38 \cdot 10^{-6} \cdot \frac{\mathbf{lb}}{\mathbf{hr}}$ $\mathbf{Mn} = 6.05 \cdot 10^{-6} \cdot \mathbf{tpy}$

$\mathbf{Hg} := 3.0 \cdot \frac{\mathbf{lb}}{10^{12} \cdot \mathbf{Btu}} \cdot 144000 \cdot \frac{\mathbf{Btu}}{\mathbf{gal}} \cdot \mathbf{Oil}$ $\mathbf{Hg} = 2.96 \cdot 10^{-7} \cdot \frac{\mathbf{lb}}{\mathbf{hr}}$ $\mathbf{Hg} = 1.3 \cdot 10^{-6} \cdot \mathbf{tpy}$

$\mathbf{Ni} := 170 \cdot \frac{\mathbf{lb}}{10^{12} \cdot \mathbf{Btu}} \cdot 144000 \cdot \frac{\mathbf{Btu}}{\mathbf{gal}} \cdot \mathbf{Oil}$ $\mathbf{Ni} = 1.68 \cdot 10^{-5} \cdot \frac{\mathbf{lb}}{\mathbf{hr}}$ $\mathbf{Ni} = 7.34 \cdot 10^{-5} \cdot \mathbf{tpy}$

Fossil Unit # 1

Fly Ash Silo 1ASB-SLO-1

Fly Ash Silo -- Two Collectors (each has three exhausters w/filters) (Emissions for each collector)

$$\mathbf{PM} := 2090 \cdot \mathbf{cfm} \cdot 3 \cdot 0.02 \cdot \frac{\mathbf{gr}}{\mathbf{acf}} \cdot 60 \cdot \frac{\mathbf{min}}{\mathbf{hr}} \cdot \frac{\mathbf{lb}}{7000 \cdot \mathbf{gr}} \qquad \mathbf{PM} = 1.075 \cdot \frac{\mathbf{lb}}{\mathbf{hr}} \qquad \mathbf{PM} \cdot 8760 \cdot \frac{\mathbf{hr}}{\mathbf{yr}} = 4.708 \cdot \mathbf{tpy}$$

$$\mathbf{PM10} := \mathbf{PM}$$

Fly Ash Silo Main Vent Baghouse

$$\mathbf{PM} := 5480 \cdot \mathbf{cfm} \cdot 0.02 \cdot \frac{\mathbf{gr}}{\mathbf{acf}} \cdot 60 \cdot \frac{\mathbf{min}}{\mathbf{hr}} \cdot \frac{\mathbf{lb}}{7000 \cdot \mathbf{gr}} \qquad \mathbf{PM} = 0.939 \cdot \frac{\mathbf{lb}}{\mathbf{hr}} \qquad \mathbf{PM} \cdot 8760 \cdot \frac{\mathbf{hr}}{\mathbf{yr}} = 4.115 \cdot \mathbf{tpy}$$

$$\mathbf{PM10} := \mathbf{PM}$$

Limestone Silo 1050 acfm

$$\mathbf{PM} := 1050 \cdot \mathbf{cfm} \cdot 0.02 \cdot \frac{\mathbf{gr}}{\mathbf{acf}} \cdot 60 \cdot \frac{\mathbf{min}}{\mathbf{hr}} \cdot \frac{\mathbf{lb}}{7000 \cdot \mathbf{gr}} \qquad \mathbf{PM} = 0.18 \cdot \frac{\mathbf{lb}}{\mathbf{hr}} \qquad \mathbf{PM} \cdot 1200 \cdot \frac{\mathbf{hr}}{\mathbf{yr}} = 0.108 \cdot \mathbf{tpy}$$

$$\mathbf{PM10} := \mathbf{PM}$$

Fossil Unit # 2

Fly Ash Silo -- Two Collectors (each has three exhausters w/filters) (Emissions for each collector)

$$\mathbf{PM} := 2090 \cdot \mathbf{cfm} \cdot 3 \cdot 0.02 \cdot \frac{\mathbf{gr}}{\mathbf{acf}} \cdot 60 \cdot \frac{\mathbf{min}}{\mathbf{hr}} \cdot \frac{\mathbf{lb}}{7000 \cdot \mathbf{gr}} \qquad \mathbf{PM} = 1.075 \cdot \frac{\mathbf{lb}}{\mathbf{hr}} \qquad \mathbf{PM} \cdot 8760 \cdot \frac{\mathbf{hr}}{\mathbf{yr}} = 4.708 \cdot \mathbf{tpy}$$

$$\mathbf{PM10} := \mathbf{PM}$$

Fly Ash Silo Main Vent Baghouse

$$\mathbf{PM} := 5480 \cdot \mathbf{cfm} \cdot 0.02 \cdot \frac{\mathbf{gr}}{\mathbf{acf}} \cdot 60 \cdot \frac{\mathbf{min}}{\mathbf{hr}} \cdot \frac{\mathbf{lb}}{7000 \cdot \mathbf{gr}} \qquad \mathbf{PM} = 0.939 \cdot \frac{\mathbf{lb}}{\mathbf{hr}} \qquad \mathbf{PM} \cdot 8760 \cdot \frac{\mathbf{hr}}{\mathbf{yr}} = 4.115 \cdot \mathbf{tpy}$$

$$\mathbf{PM10} := \mathbf{PM}$$

Unpaved Roads

k = particle size multiplier, 0.8 for TSP. Use 0.36 for PM10 (AP-42, 4th ed.)
s = silt content
S = mean vehicle speed, mph
W = mean vehicle weight, ton (includes some hvy eqpt + cars)
w = mean number of wheels
p = mean number days > 0.01 in. precipitation
Eff = Control by wetting

For TSP,

1) Limestone Deliveries

$k := 0.8 \quad s := 5 \quad S := 20 \quad w := 6 \quad p := 115.3 \quad Eff := 70\cdot\% \quad Wfull := 39 \quad Wempty := 14$

$$Efull := 5.9\cdot k\cdot\frac{s}{12}\cdot\frac{S}{30}\cdot\left(\frac{Wfull}{3}\right)^{0.7}\cdot\left(\frac{w}{4}\right)^{0.5}\cdot\frac{365-p}{365}\cdot\frac{lb}{mi} \qquad Efull = 6.616\cdot\frac{lb}{mi}$$

$$Eempty := 5.9\cdot k\cdot\frac{s}{12}\cdot\frac{S}{30}\cdot\left(\frac{Wempty}{3}\right)^{0.7}\cdot\left(\frac{w}{4}\right)^{0.5}\cdot\frac{365-p}{365}\cdot\frac{lb}{mi} \qquad Eempty = 3.229\cdot\frac{lb}{mi}$$

Design specifications for limestone use are:
3.85% S in coal, based on 1.367 MM tpy coal, yields 187,367 tpy limestone

Scaleup to accommodate max coal sulfur and max coke sulfur:
(Multiplied by 2 to account for both boilers.)

$$MaxLstone := \left(\frac{4}{3.85}\cdot 2558564+\frac{6}{3.85}\cdot 750000\right)\cdot\frac{187367}{1367000}\cdot 2 \qquad MaxLstone = 1.049\cdot 10^{6} \quad tpy$$

$$VMT1 := \frac{MaxLstone}{25}\cdot 0.1\cdot\frac{mi}{yr} \qquad VMT1 = 4196\cdot\frac{mi}{yr}$$

$$E1 := VMT1\cdot(Efull+Eempty)\cdot(1-Eff) \qquad Ehour1 := 20\cdot\frac{mi}{hr}\cdot Efull\cdot 2$$

$$E1 = 6.197\cdot tpy \qquad Ehour1 = 264.6\cdot\frac{lb}{hr}$$

2) VFL Fly Ash Transport to Landfill, large truck

$\mathbf{k} := 0.8$ $\mathbf{S} := 20$ $\mathbf{w} := 10$ $\mathbf{Eff} := 50\cdot\%$ $\mathbf{Wfull} := 50$

$\mathbf{s} := 5$ $\mathbf{p} := 115.3$ $\mathbf{Wempty} := 26$

$$\mathbf{Efull} := 5.9\cdot\mathbf{k}\cdot\frac{\mathbf{s}}{12}\cdot\frac{\mathbf{S}}{30}\cdot\left(\frac{\mathbf{Wfull}}{3}\right)^{0.7}\cdot\left(\frac{\mathbf{w}}{4}\right)^{0.5}\cdot\frac{365-\mathbf{p}}{365}\cdot\frac{\mathbf{lb}}{\mathbf{mi}} \qquad \mathbf{Efull} = 10.163\cdot\frac{\mathbf{lb}}{\mathbf{mi}}$$

$$\mathbf{Eempty} := 5.9\cdot\mathbf{k}\cdot\frac{\mathbf{s}}{12}\cdot\frac{\mathbf{S}}{30}\cdot\left(\frac{\mathbf{Wempty}}{3}\right)^{0.7}\cdot\left(\frac{\mathbf{w}}{4}\right)^{0.5}\cdot\frac{365-\mathbf{p}}{365}\cdot\frac{\mathbf{lb}}{\mathbf{mi}} \qquad \mathbf{Eempty} = 6.43\cdot\frac{\mathbf{lb}}{\mathbf{mi}}$$

85 trips per week, 52 weeks/yr based on 8% ash, ratio up for 18.5% ash.

(Multiplied by 2 to account for both boilers.)

$$\mathbf{VMT2} := 2\cdot52\cdot\frac{18.5}{8}\cdot85\cdot2\cdot0.9\cdot\frac{\mathbf{mi}}{\mathbf{yr}} \qquad \mathbf{VMT2} = 36797\cdot\frac{\mathbf{mi}}{\mathbf{yr}}$$

$$\mathbf{E2} := \mathbf{VMT2}\cdot(\mathbf{Efull}+\mathbf{Eempty})\cdot(1-\mathbf{Eff}) \qquad \mathbf{Ehour2} := 20\cdot\frac{\mathbf{mi}}{\mathbf{hr}}\cdot\mathbf{Efull}\cdot2$$

$$\mathbf{E2} = 152.6\cdot\mathbf{tpy} \qquad \mathbf{Ehour2} = 406.5\cdot\frac{\mathbf{lb}}{\mathbf{hr}}$$

3) VFL Fly Ash to Landfill, small truck

$\mathbf{k} := 0.8$ $\mathbf{S} := 20$ $\mathbf{w} := 4$ $\mathbf{Eff} := 50\cdot\%$ $\mathbf{Wfull} := 31$

$\mathbf{s} := 5$ $\mathbf{p} := 115.3$ $\mathbf{Wempty} := 11.5$

$$\mathbf{Efull} := 5.9\cdot\mathbf{k}\cdot\frac{\mathbf{s}}{12}\cdot\frac{\mathbf{S}}{30}\cdot\left(\frac{\mathbf{Wfull}}{3}\right)^{0.7}\cdot\left(\frac{\mathbf{w}}{4}\right)^{0.5}\cdot\frac{365-\mathbf{p}}{365}\cdot\frac{\mathbf{lb}}{\mathbf{mi}} \qquad \mathbf{Efull} = 4.6\cdot\frac{\mathbf{lb}}{\mathbf{mi}}$$

$$\mathbf{Eempty} := 5.9\cdot\mathbf{k}\cdot\frac{\mathbf{s}}{12}\cdot\frac{\mathbf{S}}{30}\cdot\left(\frac{\mathbf{Wempty}}{3}\right)^{0.7}\cdot\left(\frac{\mathbf{w}}{4}\right)^{0.5}\cdot\frac{365-\mathbf{p}}{365}\cdot\frac{\mathbf{lb}}{\mathbf{mi}} \qquad \mathbf{Eempty} = 2.298\cdot\frac{\mathbf{lb}}{\mathbf{mi}}$$

$\mathbf{VMT3} := \mathbf{VMT2}\cdot\frac{75}{85}$ 75 trips per week for item (3) vs. 85 trips for item (2), same miles per trip.

$$\mathbf{E3} := \mathbf{VMT3}\cdot(\mathbf{Efull}+\mathbf{Eempty})\cdot(1-\mathbf{Eff}) \qquad \mathbf{Ehour3} := 20\cdot\frac{\mathbf{mi}}{\mathbf{hr}}\cdot\mathbf{Efull}\cdot2$$

$$\mathbf{E3} = 56\cdot\mathbf{tpy} \qquad \mathbf{Ehour3} = 184\cdot\frac{\mathbf{lb}}{\mathbf{hr}}$$

4) Various other road usage (**Multiplied by 2 to account for both boilers.)**

$\mathbf{VMT4} := \frac{800 \cdot \mathbf{gal}}{\mathbf{week}} \cdot 1 \cdot \frac{\mathbf{mi}}{\mathbf{gal}} \cdot 52 \cdot \frac{\mathbf{week}}{\mathbf{yr}} \cdot 20 \cdot \% \cdot 2$ $\mathbf{VMT4} = 16640 \cdot \frac{\mathbf{mi}}{\mathbf{yr}}$

$\mathbf{k} := 0.8$ $\mathbf{S} := 20$ $\mathbf{w} := 5$ $\mathbf{Eff} := 50 \cdot \%$ $\mathbf{W} := 5$

$\mathbf{s} := 5$ $\mathbf{p} := 115.3$

$\mathbf{E} := 5.9 \cdot \mathbf{k} \cdot \frac{\mathbf{s}}{12} \cdot \frac{\mathbf{S}}{30} \cdot \left(\frac{\mathbf{W}}{3}\right)^{0.7} \cdot \left(\frac{\mathbf{w}}{4}\right)^{0.5} \cdot \frac{365 - \mathbf{p}}{365} \cdot \frac{\mathbf{lb}}{\mathbf{mi}}$ $\mathbf{E} = 1.434 \cdot \frac{\mathbf{lb}}{\mathbf{mi}}$

$\mathbf{E4} := \mathbf{VMT4} \cdot (\mathbf{E}) \cdot (1 - \mathbf{Eff})$ $\mathbf{Ehour4} := 20 \cdot \frac{\mathbf{mi}}{\mathbf{hr}} \cdot \mathbf{E} \cdot 2$

$\mathbf{E4} = 5.965 \cdot \mathbf{tpy}$ $\mathbf{Ehour4} = 57.4 \cdot \frac{\mathbf{lb}}{\mathbf{hr}}$

Total Unpaved Road

$\mathbf{PMhour} := \mathbf{Ehour1} + \mathbf{Ehour2} + \mathbf{Ehour3} + \mathbf{Ehour4}$ $\mathbf{PMhour} = 912.5 \cdot \frac{\mathbf{lb}}{\mathbf{hr}}$

$\mathbf{PMyear} := \mathbf{E1} + \mathbf{E2} + \mathbf{E3} + \mathbf{E4}$ $\mathbf{PMyear} = 220.8 \cdot \mathbf{tpy}$

PM10 -- constant is 0.36 vs 0.8 for TSP

$\frac{0.36}{0.8} \cdot \mathbf{PMhour} = 410.6 \cdot \frac{\mathbf{lb}}{\mathbf{hr}}$ $\frac{0.36}{0.8} \cdot \mathbf{PMyear} = 99.4 \cdot \mathbf{tpy}$

Paved Roads

$\mathbf{I} := 1.0$ Industrial Augmentation Factor, AP-42, 11.2.6.3
$\mathbf{n} := 2$ Number of traffic lanes
$\mathbf{s} := 12.5$ Surface material silt content, %
$\mathbf{L} := 1750$ Surface dust loading

1) Limestone Deliveries

$\mathbf{VMT1} := \mathbf{VMT1} \cdot 3 \qquad \mathbf{VMT1} = 12589.4 \cdot \frac{\mathbf{mi}}{\mathbf{yr}}$

TSP

$\mathbf{W} := 39$ Vehicle weight, tons loaded

$\mathbf{Ea} := 0.077 \cdot (\mathbf{I}) \cdot \left(\frac{4}{\mathbf{n}}\right) \cdot \left(\frac{\mathbf{s}}{10}\right) \cdot \left(\frac{\mathbf{L}}{1000}\right) \cdot \left(\frac{\mathbf{W}}{3}\right)^{0.7} \cdot \frac{\mathbf{lb}}{\mathbf{mi}} \qquad \mathbf{Ea} = 2.029 \cdot \frac{\mathbf{lb}}{\mathbf{mi}}$

$\mathbf{W} := 14$ Vehicle weight, tons empty

$\mathbf{Eb} := 0.077 \cdot (\mathbf{I}) \cdot \left(\frac{4}{\mathbf{n}}\right) \cdot \left(\frac{\mathbf{s}}{10}\right) \cdot \left(\frac{\mathbf{L}}{1000}\right) \cdot \left(\frac{\mathbf{W}}{3}\right)^{0.7} \cdot \frac{\mathbf{lb}}{\mathbf{mi}} \qquad \mathbf{Eb} = 0.99 \cdot \frac{\mathbf{lb}}{\mathbf{mi}}$

$\mathbf{E1} := \mathbf{Ea} + \mathbf{Eb} \qquad \mathbf{E1} = 3.019 \cdot \frac{\mathbf{lb}}{\mathbf{mi}}$

(PMhour values were multiplied by 2 to account for both boilers.)

$\mathbf{EffW} := 70 \cdot \%$ Control Efficiency due to wetting

$\mathbf{PM1} := \mathbf{E1} \cdot \mathbf{VMT1} \cdot (1 - \mathbf{EffW}) \qquad \mathbf{PM1} = 5.701 \cdot \mathbf{tpy} \qquad \mathbf{PMhour1} := \mathbf{E1} \cdot 20 \cdot \frac{\mathbf{mi}}{\mathbf{hr}} \cdot 2$

$\mathbf{PMhour1} = 120.763 \cdot \frac{\mathbf{lb}}{\mathbf{hr}}$

2) VFL Fly Ash Transport to Landfill, large truck

$\mathbf{VMT2} := \mathbf{VMT2} \cdot \frac{0.9}{0.6} \qquad \mathbf{VMT2} = 55194.8 \cdot \frac{\mathbf{mi}}{\mathbf{yr}}$

$\mathbf{W} := 50$ Vehicle weight, tons loaded

$\mathbf{Ea} := 0.077 \cdot (\mathbf{I}) \cdot \left(\frac{4}{\mathbf{n}}\right) \cdot \left(\frac{\mathbf{s}}{10}\right) \cdot \left(\frac{\mathbf{L}}{1000}\right) \cdot \left(\frac{\mathbf{W}}{3}\right)^{0.7} \cdot \frac{\mathbf{lb}}{\mathbf{mi}} \qquad \mathbf{Ea} = 2.414 \cdot \frac{\mathbf{lb}}{\mathbf{mi}}$

$\mathbf{W} := 26$ Vehicle weight, tons empty

$\mathbf{Eb} := 0.077 \cdot (\mathbf{I}) \cdot \left(\frac{4}{\mathbf{n}}\right) \cdot \left(\frac{\mathbf{s}}{10}\right) \cdot \left(\frac{\mathbf{L}}{1000}\right) \cdot \left(\frac{\mathbf{W}}{3}\right)^{0.7} \cdot \frac{\mathbf{lb}}{\mathbf{mi}} \qquad \mathbf{Eb} = 1.527 \cdot \frac{\mathbf{lb}}{\mathbf{mi}}$

$\mathbf{E2} := \mathbf{Ea} + \mathbf{Eb} \qquad \mathbf{E2} = 3.942 \cdot \frac{\mathbf{lb}}{\mathbf{mi}}$

$\mathbf{EffW} := 70 \cdot \%$ Control Efficiency due to wetting

$\mathbf{PM2} := \mathbf{E2} \cdot \mathbf{VMT2} \cdot (1 - \mathbf{EffW}) \quad \mathbf{PM2} = 32.633 \cdot \mathbf{tpy} \quad \mathbf{PMhour2} := \mathbf{E1} \cdot 20 \cdot \frac{\mathbf{mi}}{\mathbf{hr}} \cdot 2 \quad \mathbf{PMhour2} = 120.763 \cdot \frac{\mathbf{lb}}{\mathbf{hr}}$

3) VFL Fly Ash to Landfill, small truck

$\mathbf{VMT3} := \mathbf{VMT2}$ $\qquad$ $\mathbf{VMT3} = 55195 \cdot \frac{\mathbf{mi}}{\mathbf{yr}}$

$\mathbf{W} := 31$ Vehicle weight, tons loaded

$$\mathbf{Ea} := 0.077 \cdot (\mathbf{I}) \cdot \left(\frac{4}{\mathbf{n}}\right) \cdot \left(\frac{\mathbf{s}}{10}\right) \cdot \left(\frac{\mathbf{L}}{1000}\right) \cdot \left(\frac{\mathbf{W}}{3}\right)^{0.7} \cdot \frac{\mathbf{lb}}{\mathbf{mi}} \qquad \mathbf{Ea} = 1.728 \cdot \frac{\mathbf{lb}}{\mathbf{mi}}$$

$\mathbf{W} := 11.5$ Vehicle weight, tons empty

$$\mathbf{Eb} := 0.077 \cdot (\mathbf{I}) \cdot \left(\frac{4}{\mathbf{n}}\right) \cdot \left(\frac{\mathbf{s}}{10}\right) \cdot \left(\frac{\mathbf{L}}{1000}\right) \cdot \left(\frac{\mathbf{W}}{3}\right)^{0.7} \cdot \frac{\mathbf{lb}}{\mathbf{mi}} \qquad \mathbf{Eb} = 0.863 \cdot \frac{\mathbf{lb}}{\mathbf{mi}}$$

$\mathbf{E3} := \mathbf{Ea} + \mathbf{Eb}$ $\qquad$ $\mathbf{E3} = 2.59 \cdot \frac{\mathbf{lb}}{\mathbf{mi}}$

$\mathbf{EffW} := 70 \cdot \%$ Control Efficiency due to wetting

$\mathbf{PM3} := \mathbf{E3} \cdot \mathbf{VMT3} \cdot (1 - \mathbf{EffW})$ $\qquad$ $\mathbf{PM3} = 21.4 \cdot \mathbf{tpy}$ $\qquad$ $\mathbf{PMhour3} := \mathbf{E3} \cdot 20 \cdot \frac{\mathbf{mi}}{\mathbf{hr}} \cdot 2$

$\mathbf{PMhour3} = 103.62 \cdot \frac{\mathbf{lb}}{\mathbf{hr}}$

4) Fly Ash Sales

$\mathbf{VMT4} := 15 \cdot 0.4 \cdot \frac{\mathbf{mi}}{\mathbf{week}} \cdot 52 \cdot \frac{\mathbf{week}}{\mathbf{yr}}$ $\qquad$ $\mathbf{VMT4} = 312 \cdot \frac{\mathbf{mi}}{\mathbf{yr}}$

$\mathbf{W} := 40$ Vehicle weight, tons loaded

$$\mathbf{Ea} := 0.077 \cdot (\mathbf{I}) \cdot \left(\frac{4}{\mathbf{n}}\right) \cdot \left(\frac{\mathbf{s}}{10}\right) \cdot \left(\frac{\mathbf{L}}{1000}\right) \cdot \left(\frac{\mathbf{W}}{3}\right)^{0.7} \cdot \frac{\mathbf{lb}}{\mathbf{mi}} \qquad \mathbf{Ea} = 2.065 \cdot \frac{\mathbf{lb}}{\mathbf{mi}}$$

$\mathbf{W} := 15$ Vehicle weight, tons empty

$$\mathbf{Eb} := 0.077 \cdot (\mathbf{I}) \cdot \left(\frac{4}{\mathbf{n}}\right) \cdot \left(\frac{\mathbf{s}}{10}\right) \cdot \left(\frac{\mathbf{L}}{1000}\right) \cdot \left(\frac{\mathbf{W}}{3}\right)^{0.7} \cdot \frac{\mathbf{lb}}{\mathbf{mi}} \qquad \mathbf{Eb} = 1.039 \cdot \frac{\mathbf{lb}}{\mathbf{mi}}$$

$\mathbf{E4} := \mathbf{Ea} + \mathbf{Eb}$ $\qquad$ $\mathbf{E4} = 3.104 \cdot \frac{\mathbf{lb}}{\mathbf{mi}}$

$\mathbf{EffW} := 70 \cdot \%$ Control Efficiency due to wetting

$\mathbf{PM4} := \mathbf{E4} \cdot \mathbf{VMT4} \cdot (1 - \mathbf{EffW})$ $\qquad$ $\mathbf{PM4} = 0.145 \cdot \mathbf{tpy}$ $\qquad$ $\mathbf{PMhour4} := \mathbf{E4} \cdot 20 \cdot \frac{\mathbf{mi}}{\mathbf{hr}} \cdot 2$

$\mathbf{PMhour4} = 124.2 \cdot \frac{\mathbf{lb}}{\mathbf{hr}}$

5) Various other road usage **(Multiplied by 2 to account for both boilers.)**

$$\mathbf{VMT5} := \frac{800 \cdot \mathbf{gal}}{\mathbf{week}} \cdot 1 \cdot \frac{\mathbf{mi}}{\mathbf{gal}} \cdot 52 \cdot \frac{\mathbf{week}}{\mathbf{yr}} \cdot 80 \cdot \% \cdot 2 \qquad \mathbf{VMT5} = 66560 \cdot \frac{\mathbf{mi}}{\mathbf{yr}}$$

$\mathbf{W} := 5$ Vehicle weight, tons average

$$\mathbf{Ea} := 0.077 \cdot (\mathbf{I}) \cdot \left(\frac{4}{\mathbf{n}}\right) \cdot \left(\frac{\mathbf{s}}{10}\right) \cdot \left(\frac{\mathbf{L}}{1000}\right) \cdot \left(\frac{\mathbf{W}}{3}\right)^{0.7} \cdot \frac{\mathbf{lb}}{\mathbf{mi}} \qquad \mathbf{Ea} = 0.482 \cdot \frac{\mathbf{lb}}{\mathbf{mi}}$$

$$\mathbf{E5} := 2 \cdot \mathbf{Ea} \qquad \mathbf{E5} = 0.963 \cdot \frac{\mathbf{lb}}{\mathbf{mi}}$$

$\mathbf{EffW} := 70 \cdot \%$ Control Efficiency due to wetting

$$\mathbf{PM5} := \mathbf{E5} \cdot \mathbf{VMT5} \cdot (1 - \mathbf{EffW}) \qquad \mathbf{PM5} = 9.618 \cdot \mathbf{tpy} \qquad \mathbf{PMhour5} := \mathbf{E5} \cdot 20 \cdot \frac{\mathbf{mi}}{\mathbf{hr}} \cdot 2$$

$$\mathbf{PMhour5} = 38.535 \cdot \frac{\mathbf{lb}}{\mathbf{hr}}$$

TOTAL PM: $\mathbf{PM} := \mathbf{PM1} + \mathbf{PM2} + \mathbf{PM3} + \mathbf{PM4} + \mathbf{PM5}$ $\mathbf{PM} = 69.545 \cdot \mathbf{tpy}$

$$\mathbf{PMhour} := \mathbf{PMhour1} + \mathbf{PMhour2} + \mathbf{PMhour3} + \mathbf{PMhour4} + \mathbf{PMhouPMhour} = 507.854 \cdot \frac{\mathbf{lb}}{\mathbf{hr}}$$

PM10

$\mathbf{k} := 0.22$ particle size multiplier, PM10 (AP-42)
$\mathbf{sL} := 0.35$ Road surface silt loading, oz/yd^2

$$\mathbf{E} := \mathbf{k} \cdot (3.5) \cdot \left(\frac{\mathbf{sL}}{0.35}\right)^{0.3} \cdot \frac{\mathbf{lb}}{\mathbf{mi}} \qquad \mathbf{E} = 0.77 \cdot \frac{\mathbf{lb}}{\mathbf{mi}}$$

$$\mathbf{VMT} := \mathbf{VMT1} + \mathbf{VMT2} + \mathbf{VMT3} + \mathbf{VMT4} + \mathbf{VMT5} \qquad \mathbf{VMT} := 2 \cdot \mathbf{VMT}$$

$$\mathbf{E} \cdot \mathbf{VMT} \cdot (1 - \mathbf{EffW}) = 43.856 \cdot \mathbf{tpy} \qquad \mathbf{E} \cdot 20 \cdot \mathbf{mph} \cdot (1 - \mathbf{EffW}) \cdot 2 = 9.24 \cdot \frac{\mathbf{lb}}{\mathbf{hr}}$$

Maintenance Painting Activities (Contractor Data for 1994)

(Multiplied by 2 to account for both boilers.)

$\mathbf{Q} := 245 \cdot 12 \cdot \frac{\mathbf{gal}}{\mathbf{yr}} \cdot 1.2 \cdot 2$ $\mathbf{Q} = 7056 \cdot \frac{\mathbf{gal}}{\mathbf{yr}}$ Paint usage, scaled to 20% more than average for flexibility

$\mathbf{Q} \cdot 3.5 \cdot \frac{\mathbf{lb}}{\mathbf{gal}} = 12.348 \cdot \mathbf{tpy}$ Emissions based on maximum VOC content, 3.5 lb/gal after thinning

$\mathbf{Hours} := 8760 \cdot \frac{\mathbf{hr}}{\mathbf{yr}} \cdot \frac{8}{24} \cdot \frac{5}{7} \cdot \frac{1}{4}$ $\mathbf{Q} \cdot 3.5 \cdot \frac{\mathbf{lb}}{\mathbf{gal}} \cdot \frac{1}{\mathbf{Hours}} = 47.362 \cdot \frac{\mathbf{lb}}{\mathbf{hr}}$ Max hourly, assuming 2 hrs/shift (or 1/4 of year @ 8 hrs/shift), 5 days/week, one shift/day

Coal Car Unloading (Compare to Coal car unloading with petro coke use considerations, page 28)

Ref: AP-42, 4th ed., 11.2.3

$\mathbf{k30} := 0.74$ Particles < 30 µm $\mathbf{k10} := 0.35$ Particles < 10 µm

$\mathbf{U} := 8.5$ Mean wind speed, 7.8 mph

$\mathbf{M} := 6.5$ Moisture, %, conservative value

$\mathbf{EffW} := 70 \cdot \%$ Control Efficiency due to wetting

$\mathbf{EffE} := 70 \cdot \%$ Control Efficiency due to enclosure

$\mathbf{QA} := \mathbf{MaxCoal} \cdot \frac{4286 + 4136}{4136}$ $\mathbf{QA} = 3384252 \cdot \mathbf{tpy}$ **Scale to add Unit 2 @4286 MMBtu/hr**

$\mathbf{OPHR} := \frac{\mathbf{QA}}{3600 \cdot \mathbf{tph}}$ $\mathbf{OPHR} = 940.07 \cdot \frac{\mathbf{hr}}{\mathbf{yr}}$ for unloading.

$\mathbf{QH} := 3600 \cdot \mathbf{tph}$ from rated capacity of Belt No. 2

$\mathbf{EF30} := \mathbf{k30} \cdot (0.0032) \cdot \frac{\left(\frac{\mathbf{U}}{5}\right)^{1.3}}{\left(\frac{\mathbf{M}}{2}\right)^{1.4}} \cdot \frac{\mathbf{lb}}{\mathbf{ton}}$ $\mathbf{EF30} = 0.00091 \cdot \frac{\mathbf{lb}}{\mathbf{ton}}$ TSP emission factor

$\mathbf{EF10} := \mathbf{EF30} \cdot \frac{\mathbf{k10}}{\mathbf{k30}}$ $\mathbf{EF10} = 0.00043 \cdot \frac{\mathbf{lb}}{\mathbf{ton}}$ PM10 emission factor

TSP	PM10
$\mathbf{QA} \cdot \mathbf{EF30} \cdot (1 - \mathbf{EffW}) \cdot (1 - \mathbf{EffE}) = 0.138 \cdot \mathbf{tpy}$	$\mathbf{QA} \cdot \mathbf{EF10} \cdot (1 - \mathbf{EffW}) \cdot (1 - \mathbf{EffE}) = 0.065 \cdot \mathbf{tpy}$
$\mathbf{QH} \cdot \mathbf{EF30} \cdot (1 - \mathbf{EffW}) \cdot (1 - \mathbf{EffE}) = 0.294 \cdot \frac{\mathbf{lb}}{\mathbf{hr}}$	$\mathbf{QH} \cdot \mathbf{EF10} \cdot (1 - \mathbf{EffW}) \cdot (1 - \mathbf{EffE}) = 0.139 \cdot \frac{\mathbf{lb}}{\mathbf{hr}}$

(Use values for petroleum coke, page 28.)

Transfer Belt 1 to Belt 2 (Compare to transfer with petro coke use considerations, page 26)

Ref: AP-42, 4th ed., 11.2.3

$\mathbf{k30} := 0.74$ Particles < 30 µm $\qquad$ $\mathbf{k10} := 0.35$ Particles < 10 µm

$\mathbf{U} := 8.5$ Mean wind speed, 7.8 mph

$\mathbf{M} := 6.5$ Moisture, %, conservative value

$\mathbf{EffW} := 70 \cdot \%$ Control Efficiency due to wetting

$\mathbf{EffE} := 70 \cdot \%$ Control Efficiency due to enclosure

$\mathbf{QA} = 3384252 \cdot \mathbf{tpy}$ Coal

$\mathbf{OPHR} := \dfrac{\mathbf{QA}}{3600 \cdot \mathbf{tph}} \qquad \mathbf{OPHR} = 940.07 \cdot \dfrac{\mathbf{hr}}{\mathbf{yr}}$ for unloading.

$\mathbf{QH} := 3600 \cdot \mathbf{tph}$ from rated capacity of Belt No. 2

$$\mathbf{EF30} := \mathbf{k30} \cdot (0.0032) \cdot \frac{\left(\frac{\mathbf{U}}{5}\right)^{1.3}}{\left(\frac{\mathbf{M}}{2}\right)^{1.4}} \cdot \frac{\mathbf{lb}}{\mathbf{ton}} \qquad \mathbf{EF30} = 0.00091 \cdot \frac{\mathbf{lb}}{\mathbf{ton}}$$

TSP emission factor

$$\mathbf{EF10} := \mathbf{EF30} \cdot \frac{\mathbf{k10}}{\mathbf{k30}} \qquad \mathbf{EF10} = 0.00043 \cdot \frac{\mathbf{lb}}{\mathbf{ton}}$$

PM10 emission factor

TSP	PM10
$\mathbf{QA} \cdot \mathbf{EF30} \cdot (1 - \mathbf{EffW}) \cdot (1 - \mathbf{EffE}) = 0.138 \cdot \mathbf{tpy}$	$\mathbf{QA} \cdot \mathbf{EF10} \cdot (1 - \mathbf{EffW}) \cdot (1 - \mathbf{EffE}) = 0.065 \cdot \mathbf{tpy}$
$\mathbf{QH} \cdot \mathbf{EF30} \cdot (1 - \mathbf{EffW}) \cdot (1 - \mathbf{EffE}) = 0.294 \cdot \dfrac{\mathbf{lb}}{\mathbf{hr}}$	$\mathbf{QH} \cdot \mathbf{EF10} \cdot (1 - \mathbf{EffW}) \cdot (1 - \mathbf{EffE}) = 0.139 \cdot \dfrac{\mathbf{lb}}{\mathbf{hr}}$

(Use values for petroleum coke, page 28.)

Transfer Building Dust Collector 1CHF-DCO-1

	Parameters:	References:
Flow Rate	$\mathbf{ACFM} := 48154 \cdot \mathbf{acfm}$	Design rate
Emission Rate	$\mathbf{ER} := 0.02 \cdot \frac{\mathbf{gr}}{\mathbf{acf}}$	Permit Condition
Allowable Hours	$\mathbf{OPHR} := 8760 \cdot \frac{\mathbf{hr}}{\mathbf{yr}}$	

Potential Emissions:

$$\mathbf{PM} := 48154 \cdot \mathbf{acfm} \cdot 0.02 \cdot \frac{\mathbf{gr}}{\mathbf{acf}} \cdot 60 \cdot \frac{\mathbf{min}}{\mathbf{hr}} \cdot \frac{\mathbf{lb}}{7000 \cdot \mathbf{gr}} \qquad \mathbf{PM} = 8.255 \cdot \frac{\mathbf{lb}}{\mathbf{hr}} \qquad \mathbf{PM} \cdot 8760 \cdot \frac{\mathbf{hr}}{\mathbf{yr}} = 36.157 \cdot \mathbf{tpy}$$

$$\mathbf{PM10} := \mathbf{PM}$$

Crusher Building Dust Collector 1CHF-DCO-2

	Parameters:	References:
Flow Rate	$\mathbf{ACFM} := 33557 \cdot \mathbf{acfm}$	Design rate
Emission Rate	$\mathbf{ER} := 0.02 \cdot \frac{\mathbf{gr}}{\mathbf{acf}}$	Permit Condition
Allowable Hours	$\mathbf{OPHR} := 8760 \cdot \frac{\mathbf{hr}}{\mathbf{yr}}$	

Potential Emissions:

$$\mathbf{PM} := 33557 \cdot \mathbf{acfm} \cdot 0.02 \cdot \frac{\mathbf{gr}}{\mathbf{acf}} \cdot 60 \cdot \frac{\mathbf{min}}{\mathbf{hr}} \cdot \frac{\mathbf{lb}}{7000 \cdot \mathbf{gr}} \qquad \mathbf{PM} = 5.753 \cdot \frac{\mathbf{lb}}{\mathbf{hr}} \qquad \mathbf{PM10} := \mathbf{PM}$$

$$\mathbf{PM} \cdot 8760 \cdot \frac{\mathbf{hr}}{\mathbf{yr}} = 25.197 \cdot \mathbf{tpy}$$

Plant Transfer Dust Collector 1CHF-DCO-3

	Parameters:	References:
Flow Rate	$\mathbf{ACFM} := 79052 \cdot \mathbf{acfm}$	Design rate
Emission Rate	$\mathbf{ER} := 0.02 \cdot \frac{\mathbf{gr}}{\mathbf{acf}}$	Permit Condition
Allowable Hours	$\mathbf{OPHR} := 8760 \cdot \frac{\mathbf{hr}}{\mathbf{yr}}$	

Potential Emissions:

$$\mathbf{PM} := 79052 \cdot \mathbf{acfm} \cdot 0.02 \cdot \frac{\mathbf{gr}}{\mathbf{acf}} \cdot 60 \cdot \frac{\mathbf{min}}{\mathbf{hr}} \cdot \frac{\mathbf{lb}}{7000 \cdot \mathbf{gr}} \qquad \mathbf{PM} = 13.552 \cdot \frac{\mathbf{lb}}{\mathbf{hr}} \qquad \mathbf{PM10} := \mathbf{PM}$$

$$\mathbf{PM} \cdot 8760 \cdot \frac{\mathbf{hr}}{\mathbf{yr}} = 59.357 \cdot \mathbf{tpy}$$

Emergency (Reserve) Reclaim Dust Collector 1CHF-DCO-6

Parameters:		References:
Flow Rate	$\mathbf{ACFM} := 6451 \cdot \mathbf{acfm}$	Design rate
Emission Rate	$\mathbf{ER} := 0.02 \cdot \frac{\mathbf{gr}}{\mathbf{acf}}$	Permit Condition
Allowable Hours	$\mathbf{OPHR} := 8760 \cdot \frac{\mathbf{hr}}{\mathbf{yr}}$	

Potential Emissions:

$$\mathbf{PM} := 6451 \cdot \mathbf{acfm} \cdot 0.02 \cdot \frac{\mathbf{gr}}{\mathbf{acf}} \cdot 60 \cdot \frac{\mathbf{min}}{\mathbf{hr}} \cdot \frac{\mathbf{lb}}{7000 \cdot \mathbf{gr}} \qquad \mathbf{PM} = 1.106 \cdot \frac{\mathbf{lb}}{\mathbf{hr}} \qquad \mathbf{PM10} := \mathbf{PM}$$

$$\mathbf{PM} \cdot 8760 \cdot \frac{\mathbf{hr}}{\mathbf{yr}} = 4.844 \cdot \mathbf{tpy}$$

Limestone Hopper (Day Bin) Dust Collector 1CHF-DCO-4

Parameters:		References:
Flow Rate	$\mathbf{ACFM} := 22930 \cdot \mathbf{acfm}$	Design rate
Emission Rate	$\mathbf{ER} := 0.02 \cdot \frac{\mathbf{gr}}{\mathbf{acf}}$	Permit Condition
Allowable Hours	$\mathbf{OPHR} := 8760 \cdot \frac{\mathbf{hr}}{\mathbf{yr}}$	

Potential Emissions:

$$\mathbf{PM} := 22930 \cdot \mathbf{acfm} \cdot 0.02 \cdot \frac{\mathbf{gr}}{\mathbf{acf}} \cdot 60 \cdot \frac{\mathbf{min}}{\mathbf{hr}} \cdot \frac{\mathbf{lb}}{7000 \cdot \mathbf{gr}} \qquad \mathbf{PM} = 3.931 \cdot \frac{\mathbf{lb}}{\mathbf{hr}} \qquad \mathbf{PM10} := \mathbf{PM}$$

$$\mathbf{PM} \cdot 8760 \cdot \frac{\mathbf{hr}}{\mathbf{yr}} = 17.217 \cdot \mathbf{tpy}$$

Coal Storage Pile Wind Erosion (Compare to wind erosion with petro coke use considerations)

E = 1.7 x (s/15) x (365-p)/235 x (f/15)   lb/day/acre

where:

s = 2.2 for coal (AP-42, Table 11.2.3-1, 9/88)
s = 1.6 for limestone (AP-42, Table 11.2.3-1, 9/88)
p = number of days >0.01 inches of precipitation per year
p = 115.3
f = percent of time that unobstructed wind exceeds 12 mph at mean height of pile
f = assume 18%

$$\mathbf{E} := 1.7\cdot\left(\frac{2.2}{1.5}\right)\cdot\left(\frac{365-115.3}{235}\right)\cdot\left(\frac{18}{15}\right)\cdot\frac{\mathbf{lb}}{(\mathbf{day}\cdot\mathbf{acre})} \qquad \mathbf{E} = 3.179\cdot\frac{\mathbf{lb}}{(\mathbf{day}\cdot\mathbf{acre})}$$

$\mathbf{QA} = 3384252\cdot\mathbf{tpy}$ Tons Coal annual usage

$\mathbf{CoalStock} := \frac{\mathbf{QA}}{4}\cdot\mathbf{yr}$ $\mathbf{CoalStock} = 846063\cdot\mathbf{ton}$ 3 months storage.

$\mathbf{CoalDensity} := 1.3\cdot 62.4\cdot\frac{\mathbf{lb}}{\mathbf{ft}^3}$ $\mathbf{CoalDensity} = 81.12\cdot\frac{\mathbf{lb}}{\mathbf{ft}^3}$

Volume is approx. $\frac{\mathbf{CoalStock}}{\mathbf{CoalDensity}} = 20859549\cdot\mathbf{ft}^3$

Assume pile height of 20 ft, with l/w ratio of 3/1, and slope of 45°, then top surface is no more than

$$\frac{\mathbf{CoalStock}}{20\cdot\mathbf{ft}\cdot\mathbf{CoalDensity}} = 23.94\cdot\mathbf{acre}$$

$\mathbf{PM} := \mathbf{E}\cdot 24\cdot\mathbf{acre}\cdot 365\cdot\frac{\mathbf{day}}{\mathbf{yr}}$ $\mathbf{PM} = 13.9\cdot\mathbf{tpy}$ $\mathbf{PM} = 3.2\cdot\frac{\mathbf{lb}}{\mathbf{hr}}$ Assume PM10 = PM

(Use values for petroleum coke, page 27.)

Emergency (Reserve) Pile Wind Erosion:

5 day storage, conical pile

E = 1.7 x (s/15) x (365-p)/235 x (f/15) lb/day/acre

where:

s = 2.2 for coal (AP-42, Table 11.2.3-1, 9/88)
s = 1.6 for limestone (AP-42, Table 11.2.3-1, 9/88)
p = number of days >0.01 inches of precipitation per year
p = 115.3
f = percent of time that unobstructed wind exceeds 12 mph at mean height of pile
f = assume 18%

$$\mathbf{E} := 1.7\cdot\left(\frac{2.2}{1.5}\right)\cdot\left(\frac{365-115.3}{235}\right)\cdot\left(\frac{18}{15}\right)\cdot\frac{\mathbf{lb}}{(\mathbf{day}\cdot\mathbf{acre})} \qquad \mathbf{E} = 3.179\cdot\frac{\mathbf{lb}}{(\mathbf{day}\cdot\mathbf{acre})}$$

$\mathbf{QA} = 3384252\cdot\mathbf{tpy}$ Tons Coal annual usage

$\mathbf{CoalStock} := \frac{5\cdot\mathbf{QA}}{365}\cdot\mathbf{yr}$ $\mathbf{CoalStock} = 46360\cdot\mathbf{ton}$ 5 days storage.

$\mathbf{CoalDensity} := 1.3\cdot 62.4\cdot\frac{\mathbf{lb}}{\mathbf{ft}^3}$ $\mathbf{CoalDensity} = 81.12\cdot\frac{\mathbf{lb}}{\mathbf{ft}^3}$

Volume is approx. $\mathbf{Vol} := \frac{\mathbf{CoalStock}}{\mathbf{CoalDensity}}$ $\mathbf{Vol} = 1.143\cdot 10^{6}\ \cdot\mathbf{ft}^3$

Assume conical pile height of 30 ft, then surface is $\mathbf{Height} := 40\cdot\mathbf{ft}$

$$\mathbf{Radius} := \sqrt{\frac{3\cdot\mathbf{Vol}}{\pi\cdot\mathbf{Height}}} \qquad \mathbf{Radius} = 165.187\cdot\mathbf{ft}$$

$$\mathbf{Surf} := \pi\cdot\mathbf{Radius}\cdot\sqrt{\mathbf{Radius}^2 + (\mathbf{Height})^2}\mathbf{Surf} = 2.025\cdot\mathbf{acre}$$

$$\mathbf{PM} := \mathbf{E}\cdot\mathbf{Surf}\cdot 365\cdot\frac{\mathbf{day}}{\mathbf{yr}} \qquad \mathbf{PM} = 1.2\cdot\mathbf{tpy} \qquad \mathbf{PM} = 0.3\cdot\frac{\mathbf{lb}}{\mathbf{hr}}$$

Assume PM10 = PM

Limestone Storage Pile Wind Erosion

E = 1.7 x (s/15) x (365-p)/235 x (f/15) lb/day/acre

where:

s = 2.2 for coal (AP-42, Table 11.2.3-1, 9/88)
s = 1.6 for limestone (AP-42, Table 11.2.3-1, 9/88)
p = number of days >0.01 inches of precipitation per year
p = 115.3
f = percent of time that unobstructed wind exceeds 12 mph at mean height of pile
f = assume 18%

$$\mathbf{E} := 1.7\cdot\left(\frac{1.6}{1.5}\right)\cdot\left(\frac{365-115.3}{235}\right)\cdot\left(\frac{18}{15}\right)\cdot\frac{\mathbf{lb}}{(\mathbf{day}\cdot\mathbf{acre})} \qquad \mathbf{E} = 2.312\cdot\frac{\mathbf{lb}}{(\mathbf{day}\cdot\mathbf{acre})}$$

$$\mathbf{MaxLstone} = 1.049\cdot 10^{6}$$

$$\mathbf{LStoneStock} := \frac{\mathbf{MaxLstone}\cdot\mathbf{tpy}}{12}\cdot\mathbf{yr} \qquad \mathbf{LStoneStock} = 87426\cdot\mathbf{ton}$$

1 month storage.

$$\mathbf{LStoneDensity} := 2.1\cdot 62.4\cdot\frac{\mathbf{lb}}{\mathbf{ft}^{3}} \qquad \mathbf{LStoneDensity} = 131.04\cdot\frac{\mathbf{lb}}{\mathbf{ft}^{3}}$$

Volume is approx. $\mathbf{Vol} := \frac{\mathbf{LStoneStock}}{\mathbf{LStoneDensity}} \qquad \mathbf{Vol} = 1\cdot 10^{6}\ \cdot\mathbf{ft}^{3}$

Assume conical pile height then surface is $\mathbf{Height} := 20\cdot\mathbf{ft}$

$$\mathbf{Radius} := \sqrt{\frac{3\cdot\mathbf{Vol}}{\pi\cdot\mathbf{Height}}} \qquad \mathbf{Radius} = 252.409\cdot\mathbf{ft}$$

$$\mathbf{Surf} := \pi\cdot\mathbf{Radius}\cdot\sqrt{\mathbf{Radius}^{2} + (\mathbf{Height})^{2}} \qquad \mathbf{Surf} = 4.609\cdot\mathbf{acre}$$

$$\mathbf{PM} := \mathbf{E}\cdot\mathbf{Surf}\cdot 365\cdot\frac{\mathbf{day}}{\mathbf{yr}} \qquad \mathbf{PM} = 1.945\cdot\mathbf{tpy} \qquad \mathbf{PM} = 0.444\cdot\frac{\mathbf{lb}}{\mathbf{hr}}$$

Which supports the insignificant or presumptive exemption referenced.

Assume PM10 = PM

Well water aeration: **(Multiplied by 2 to account for both boilers.)**

$0.2\cdot\mathbf{ppm}\cdot 450000\cdot\frac{\mathbf{gal}}{\mathbf{day}}\cdot 2\cdot 365\cdot\frac{\mathbf{day}}{\mathbf{yr}}\cdot 8.34\cdot\frac{\mathbf{lb}}{\mathbf{gal}} = 0.274\,\bullet\mathbf{t|}$H2S, Insignificant

Blasting beads, outdoor blasting, no control equipment.:

$160\cdot 100\cdot\mathbf{lb}\cdot\frac{12}{\mathbf{yr}} = 96\,\bullet\mathbf{tpy}$ Tons blast beads

Assuming 90% of the material is discarded as solid waste yields 10 tpy emissions as PM.

$\mathbf{OPHR} := 8760\cdot\frac{\mathbf{hr}}{\mathbf{yr}}\cdot\frac{1}{4}\cdot\frac{5}{7}\cdot\frac{8}{24}$ $\quad$ $\mathbf{OPHR} = 521.429\,\bullet\frac{\mathbf{hr}}{\mathbf{yr}}$

$\frac{10\cdot\mathbf{tpy}}{\mathbf{OPHR}} = 38.356\,\bullet\frac{\mathbf{lb}}{\mathbf{hr}}$

Clearwell: **(Multiplied by 2 to account for both boilers.)**

$450000\cdot\frac{\mathbf{gal}}{\mathbf{day}}\cdot 2\cdot 365\cdot\frac{\mathbf{day}}{\mathbf{yr}}\cdot 5\cdot\mathbf{ppm}\cdot 8.34\cdot\frac{\mathbf{lb}}{\mathbf{gal}} = 6.849\,\bullet\mathbf{tpy}$

Cl emissions

$450000\cdot\frac{\mathbf{gal}}{\mathbf{day}}\cdot 2\cdot 5\cdot\mathbf{ppm}\cdot 8.34\cdot\frac{\mathbf{lb}}{\mathbf{gal}} = 1.564\,\bullet\frac{\mathbf{lb}}{\mathbf{hr}}$

Service water tanks: Total Cl same as for Clearwell

Stacker/Reclaimer Operation

$\mathbf{Stackout} := 3500 \cdot \mathbf{tph}$ design rates

$\mathbf{Reclaim} := 1800 \cdot \mathbf{tph}$

$\mathbf{QA} := \mathbf{MaxCoal} \cdot \frac{4286 + 4136}{4136}$ $\mathbf{QA} = 3384252 \cdot \mathbf{tpy}$ Maximum Coal Use,

Scale to add Unit 2 @4286 MMBtu/hr

Ref: AP-42, 4th ed., 11.2.3

$\mathbf{k30} := 0.74$ Particles < 30 μm $\mathbf{k10} := 0.35$ Particles < 10 μm

$\mathbf{U} := 8.5$ Mean wind speed, mph

$\mathbf{M} := 6.5$ Moisture, %, conservative value

$\mathbf{EffW} := 0 \cdot \%$ Control Efficiency due to wetting

$\mathbf{EffE} := 0 \cdot \%$ Control Efficiency due to enclosure

$\mathbf{QH} := 3600 \cdot \mathbf{tph}$ Max hourly transfer rate, from rated capacity of Belt No. 3

$$\mathbf{EF30} := \mathbf{k30} \cdot (0.0032) \cdot \frac{\left(\frac{\mathbf{U}}{5}\right)^{1.3}}{\left(\frac{\mathbf{M}}{2}\right)^{1.4}} \cdot \frac{\mathbf{lb}}{\mathbf{ton}} \qquad \mathbf{EF30} = 0.00091 \cdot \frac{\mathbf{lb}}{\mathbf{ton}}$$

TSP emission factor

$$\mathbf{EF10} := \mathbf{EF30} \cdot \frac{\mathbf{k10}}{\mathbf{k30}} \qquad \mathbf{EF10} = 0.00043 \cdot \frac{\mathbf{lb}}{\mathbf{ton}}$$

PM10 emission factor

Multiply QA by 2 to cover both reclaim and stackout; max hourly, however, is not simultaneous operation.:

TSP	PM10
$2 \cdot \mathbf{QA} \cdot \mathbf{EF30} \cdot (1 - \mathbf{EffW}) \cdot (1 - \mathbf{EffE}) = 3.068 \cdot \mathbf{tpy}$	$2 \cdot \mathbf{QA} \cdot \mathbf{EF10} \cdot (1 - \mathbf{EffW}) \cdot (1 - \mathbf{EffE}) = 1.451 \cdot \mathbf{tpy}$
$\mathbf{QH} \cdot \mathbf{EF30} \cdot (1 - \mathbf{EffW}) \cdot (1 - \mathbf{EffE}) = 3.263 \cdot \frac{\mathbf{lb}}{\mathbf{hr}}$	$\mathbf{QH} \cdot \mathbf{EF10} \cdot (1 - \mathbf{EffW}) \cdot (1 - \mathbf{EffE}) = 1.543 \cdot \frac{\mathbf{lb}}{\mathbf{hr}}$

Emergency (Reserve) Stockout Transfer:

For Potential Annual Emissions, this pile is not used if active storage is available. Assume four instances of use in a year, 5 day storage. Thus, potential emissions are as follows:

TSP	PM10
$\mathbf{QA} \cdot \mathbf{EF30} \cdot \frac{20}{365} = 0.084 \cdot \mathbf{tpy}$	$\mathbf{QA} \cdot \mathbf{EF10} \cdot \frac{20}{365} = 0.04 \cdot \mathbf{tpy}$

$\mathbf{QH} := 3600 \cdot \mathbf{tph}$ Conveyor 4 capacity

$\mathbf{QH} \cdot \mathbf{EF30} = 3.263 \cdot \frac{\mathbf{lb}}{\mathbf{hr}}$ $\mathbf{QH} \cdot \mathbf{EF10} = 1.543 \cdot \frac{\mathbf{lb}}{\mathbf{hr}}$

Limestone Receiving (by truck)

Design specifications for limestone use are:
3.85% S in coal, based on 1.367 MM tpy coal, yields 187,367 tpy limestone

$\mathbf{MaxLstone} := \mathbf{MaxLstone}\cdot\mathbf{tpy}$ $\mathbf{MaxLstone} = 1.049\cdot 10^{6}\ \cdot\mathbf{tpy}$

Ref: AP-42, 4th ed., 11.2.3

$\mathbf{k30} := 0.74$ Particles < 30 μm $\mathbf{k10} := 0.35$ Particles < 10 μm

$\mathbf{U} := 8.5$ Mean wind speed, mph

$\mathbf{M} := 13$ Moisture, %, conservative value range 13% to 15%

$\mathbf{QH} := 4\cdot 25\cdot\mathbf{tph}$ Max hourly transfer rate, 4 25-ton trucks per hour.

$$\mathbf{EF30} := \mathbf{k30}\cdot(0.0032)\cdot\frac{\left(\frac{\mathbf{U}}{5}\right)^{1.3}}{\left(\frac{\mathbf{M}}{2}\right)^{1.4}}\cdot\frac{\mathbf{lb}}{\mathbf{ton}} \qquad \mathbf{EF30} = 0.00034\cdot\frac{\mathbf{lb}}{\mathbf{ton}}$$ TSP emission factor

$$\mathbf{EF10} := \mathbf{EF30}\cdot\frac{\mathbf{k10}}{\mathbf{k30}} \qquad \mathbf{EF10} = 0.00016\cdot\frac{\mathbf{lb}}{\mathbf{ton}}$$ PM10 emission factor

TSP	PM10
$\mathbf{MaxLstone}\cdot\mathbf{EF30} = 0.18\cdot\mathbf{tpy}$	$\mathbf{MaxLstone}\cdot\mathbf{EF10} = 0.085\cdot\mathbf{tpy}$
$\mathbf{QH}\cdot\mathbf{EF30} = 0.034\cdot\frac{\mathbf{lb}}{\mathbf{hr}}$	$\mathbf{QH}\cdot\mathbf{EF10} = 0.016\cdot\frac{\mathbf{lb}}{\mathbf{hr}}$

Limestone Reclaim

Annual Potential same as for receiving, above.

TSP	PM10
$\mathbf{MaxLstone}\cdot\mathbf{EF30} = 0.18\cdot\mathbf{tpy}$	$\mathbf{MaxLstone}\cdot\mathbf{EF10} = 0.085\cdot\mathbf{tpy}$

$\mathbf{QH} := 600\cdot\mathbf{tph}\cdot 2$ Hourly rate determined by 2 reclaim conveyors @600 tph each.

$\mathbf{QH}\cdot\mathbf{EF30} = 0.412\cdot\frac{\mathbf{lb}}{\mathbf{hr}}$	$\mathbf{QH}\cdot\mathbf{EF10} = 0.195\cdot\frac{\mathbf{lb}}{\mathbf{hr}}$

Cooling Tower Emissions CTW-1, CTW-2 (Emission rates shown are for each cooling tower.)

Circulation Rate = 225,000 gpm, natural draft.
Total Dissolved Solids = 6,000 ppm

AP42, 5th ed.

Drift Rate = $\mathbf{DR} := 225000 \cdot \mathbf{gpm} \cdot 0.00088 \cdot \%$ $\mathbf{DR} = 1.98 \cdot \mathbf{gpm}$

$\mathbf{Edr} := \mathbf{DR} \cdot 8.34 \cdot \frac{\mathbf{lb}}{\mathbf{gal}} \cdot 6000 \cdot \mathbf{ppm}$ $\mathbf{Edr} = 5.945 \cdot \frac{\mathbf{lb}}{\mathbf{hr}}$

$\mathbf{Edr} \cdot 8760 \cdot \frac{\mathbf{hr}}{\mathbf{yr}} = 26.038 \cdot \mathbf{tpy}$ PM = PM10

$3500000 \cdot \frac{\mathbf{gal}}{\mathbf{day}} \cdot 2 \cdot 0.2 \cdot \mathbf{ppm} \cdot 8.34 \cdot \frac{\mathbf{lb}}{\mathbf{gal}} = 0.486 \cdot \frac{\mathbf{lb}}{\mathbf{hr}}$ Cl emissions based on makeup rate.

$3500000 \cdot \frac{\mathbf{gal}}{\mathbf{day}} \cdot 2 \cdot 0.2 \cdot \mathbf{ppm} \cdot 8.34 \cdot \frac{\mathbf{lb}}{\mathbf{gal}} \cdot 365 \cdot \frac{\mathbf{day}}{\mathbf{yr}} = 2.131 \cdot \mathbf{tpy}$

Other Solid Fuels: Petroleum Coke

Given: Usage up to 750,000 tpy (voluntary maximum, difference in potential made up by coal)
%S 3.5 to 6.0 (More conservative than coal, but SO2 limited by permit)
%Ash 0.3 to 4.0 (Results in lower emissions than coal)
Btu/lb 12,000 - 15,000 (Results in lower quantity burned per boiler rating than coal)
% Moisture (5.0 to 10.0 results in higher hourly fugitive particulate
than coal)
3-month storage (as alternative to coal)

The potential emissions analysis required is for hourly and annual potential fugitive emissions, from both fuel (coal/coke) and limestone. Affected equations are for wind erosion and transfer points, and vehicle miles traveled.

Three month storage =

$$\mathbf{QCoke} := (4286 + 4136)\cdot\frac{\mathbf{MMBtu}}{\mathbf{hr}}\cdot\frac{\mathbf{lb}}{12000\cdot\mathbf{Btu}} \qquad \mathbf{QCoke} = 701833\cdot\frac{\mathbf{lb}}{\mathbf{hr}} \qquad \mathbf{QCoke}\cdot 8760\cdot\frac{\mathbf{hr}}{\mathbf{yr}} = 3074029\cdot\mathbf{tpy}$$

$$\mathbf{QCoke} = 769017\cdot\frac{\mathbf{ton}}{3\cdot\mathbf{month}} \qquad \mathbf{MaxCoke} := 750000\cdot\mathbf{tpy}$$

Assume silt% = 5.4% (AP-42, 5th ed., high end for Coke Breeze). Then, comparing to Coal, PM and PM10 for wind erosion are:

$$\frac{5.4}{2.2}\cdot 3.2\cdot\frac{\mathbf{lb}}{\mathbf{hr}} = 7.9\cdot\frac{\mathbf{lb}}{\mathbf{hr}}$$

Using Coal and Coke for annual emissions, and taking ratios of quantities, Btu and silt%:

$$\frac{(4136 + 4286)\cdot\frac{\mathbf{MMBtu}}{\mathbf{hr}}\cdot 8760\cdot\frac{\mathbf{hr}}{\mathbf{yr}} - 750000\cdot\mathbf{tpy}\cdot 12000\cdot\frac{\mathbf{Btu}}{\mathbf{lb}}}{10900\cdot\frac{\mathbf{Btu}}{\mathbf{lb}}} = 2558564\cdot\mathbf{tpy}\ \text{Coal}$$

$$\frac{2558564}{3384252}\cdot 13.9\cdot\mathbf{tpy} + \left(\frac{750000}{3384252}\cdot\frac{5.4}{2.2}\right)\cdot 13.9\cdot\mathbf{tpy} = 18.07\cdot\mathbf{tpy}$$ Potential annual PM, PM10 emissions due to wind erosion, replace that for coal alone.

For Coal Car (Coke) unloading. difference is in moisture%:

(Multiplied by 2 to account for both boilers.)

$\mathbf{M} := 5.5$ moisture, %

$\mathbf{EF30} := \mathbf{k30} \cdot (0.0032) \cdot \frac{\left(\frac{\mathbf{U}}{5}\right)^{1.3}}{\left(\frac{\mathbf{M}}{2}\right)^{1.4}} \cdot \frac{\mathbf{lb}}{\mathbf{ton}}$ $\mathbf{EF30} = 0.00115 \cdot \frac{\mathbf{lb}}{\mathbf{ton}}$ TSP emission factor

$\mathbf{EF10} := \mathbf{EF30} \cdot \frac{\mathbf{k10}}{\mathbf{k30}}$ $\mathbf{EF10} = 0.00054 \cdot \frac{\mathbf{lb}}{\mathbf{ton}}$ PM10 emission factor

$\mathbf{QCoal} := 2558564 \cdot 2 \cdot \mathbf{tpy}$

$\mathbf{QCoke} := 750000 \cdot 2 \cdot \mathbf{tpy}$

$\mathbf{QH} := 3600 \cdot \mathbf{tph}$

TSP

$$\left(\mathbf{QCoal} \cdot 0.00091 \cdot \frac{\mathbf{lb}}{\mathbf{ton}} + \mathbf{QCoke} \cdot 0.00115 \cdot \frac{\mathbf{lb}}{\mathbf{ton}}\right) \cdot (1 - \mathbf{EffW}) \cdot (1 - \mathbf{EffE}) = 3.191 \cdot \mathbf{tpy}$$

$$\mathbf{QH} \cdot 0.00115 \cdot \frac{\mathbf{lb}}{\mathbf{ton}} \cdot (1 - \mathbf{EffW}) \cdot (1 - \mathbf{EffE}) = 4.14 \cdot \frac{\mathbf{lb}}{\mathbf{hr}}$$

PM

$$\left(\mathbf{QCoal} \cdot 0.00043 \cdot \frac{\mathbf{lb}}{\mathbf{ton}} + \mathbf{QCoke} \cdot 0.00054 \cdot \frac{\mathbf{lb}}{\mathbf{ton}}\right) \cdot (1 - \mathbf{EffW}) \cdot (1 - \mathbf{EffE}) = 1.505 \cdot \mathbf{tpy}$$

$$\mathbf{QH} \cdot 0.00054 \cdot \frac{\mathbf{lb}}{\mathbf{ton}} \cdot (1 - \mathbf{EffW}) \cdot (1 - \mathbf{EffE}) = 1.944 \cdot \frac{\mathbf{lb}}{\mathbf{hr}}$$

Replace coal unloading and transfer Belt 1 to Belt 2 with these higher potential emissions.

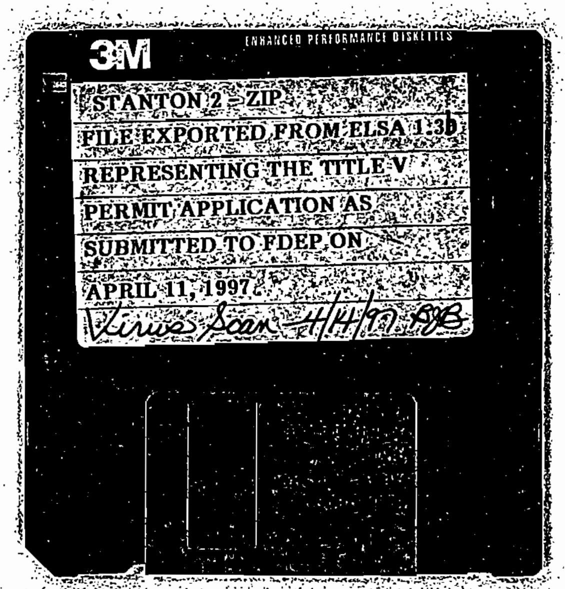

STANTON 2 - ZIP
FILE EXPORTED FROM ELSA 1.3b
REPRESENTING THE TITLE V
PERMIT APPLICATION AS
SUBMITTED TO FDEP ON
APRIL 11, 1997
Virus Scan 4/14/97 RJB