RECEIVED
NOV 1 2 2002
D.E.P.
SOUTHWEST DISTRICT

CONSTRUCTION PERMIT APPLICATION
CHARLOTTE PIPE AND FOUNDRY COMPANY
PLASTICS DIVISION
WILDWOOD, FLORIDA

PREPARED FOR:

CHARLOTTE PIPE AND FOUNDRY COMPANY
PLASTICS DIVISION
MONROE, NORTH CAROLINA

PREPARED BY:

AWARE ENVIRONMENTAL ® INC.
9305-J MONROE ROAD
CHARLOTTE, NORTH CAROLINA
AEI Job No. N188-40
June 1998
Revised October 2002

TABLE OF CONTENTS

Section No.	Title	Page No.
1.0	INTRODUCTION	1
2.0	PROCESS DESCRIPTION	2
2.1	PVC Pipe Extrusion	2
2.2	CPVC Pipe Extrusion	3
3.0	APPLICATION FOR AIR PERMIT – LONG FORM	4

LIST OF TABLES

Table 1 List of Control Devices and Emission Points

LIST OF FIGURES

Figure 1. Site Location Map

Figure 2. Site Plan

Figure 3. Process Flow Diagram

LIST OF ATTACHMENTS

Attachment A. Emission Calculations and Emission Factor Selection

Attachment B. Operation and Maintenance Plan

SECTION 1.0
INTRODUCTION

Charlotte Pipe and Foundry Company, Plastic Division is requesting a construction permit for the construction of a new facility to manufacture Polyvinyl Chloride (PVC) pipe and Chlorinated Polyvinyl Chloride (CPVC) pipe. The proposed site will be in Wildwood, Florida (Figure 1). A plant site plan and a floor plan are also attached (Figure 2-A and Figure 2-B). The equipment to be installed includes PVC/CPVC material handling systems and PVC/CPVC pipe extrusion processes (Figure 3A and Figure 3B). The only significant air emissions from the facility will result from the PVC/CPVC material handling systems, which will be controlled by baghouse filters.

SECTION 2.0
PROCESS DESCRIPTION

Pipe manufacturing at the proposed Charlotte Pipe & Foundry Company (CPFC) facility to be located in Wildwood, Florida will involve PVC/CPVC material handling and PVC/CPVC pipe extrusion. Typical equipment to be used in the proposed manufacturing operations include:

- Six (6) material storage silos;
- One (1) railcar unloading central receiver;
- One (1) waste grinder;
- Two (2) waste hoppers;
- Four (4) mixers;
- Three (3) recycled material silos;
- Ten (10) filter receivers (hoppers) for extruders (nine (9) for the first phase, one (1) to be added in the future); and
- Seven (7) pipe extrusion lines (six (6) for the first phase, one (1) to be added in the future).

A summary description of proposed manufacturing operations is presented below.

2.1 PVC Pipe Extrusion

The PVC compound used in the extrusion of PVC pipe will be delivered in bulk to CPFC via railcars. The material will be unloaded from the railcars into material transfer stations and pneumatically conveyed to storage silos. From the storage silos, the PVC material will be transferred either directly to extrusion machines for pipe manufacturing or to a mixing station to mix with recycled material. Waste PVC pipe will then be recycled back into the grinding/pulverizing machine and transferred to a mixing station. The following typical PVC pipe extrusion process material-handling scenario is presented below:

- Material Transfer Station;
- Storage Silo;
- Recycle – Grinding/Pulverizing;
- Mixing Station;
- Material Transfer Hopper (to pipe extruders), and
- PVC Pipe Extruders.

2.2 CPVC Pipe Extrusion

The CPVC compound used in the extrusion of PVC pipe will be delivered in bulk to CPFC via railcars. The material will be unloaded from the rail cars pneumatically to the storage silo. From the storage silo, the CPVC material will be transferred either directly to extrusion machines for pipe manufacturing or to a mixing station to mix with recycled material. Waste CPVC pipe will be recycled back into the grinding/pulverizing machine and transferred to a mixing station. The following typical CPVC pipe extrusion process material-handling scenario is presented below:

- Storage Silo;
- Recycle – Grinding/Pulverizing;
- Mixing Station;
- Material Transfer Hopper (to pipe extruders), and
- CPVC Pipe Extruders.

SECTION 3.0
APPLICATION FOR AIR PERMIT – LONG FORM

Department of Environmental Protection

Division of Air Resources Management

APPLICATION FOR AIR PERMIT - NON-TITLE V SOURCE

See Instructions for Form No. 62-210.900(3)

I. APPLICATION INFORMATION

Identification of Facility

1. Facility Owner/Company Name: Charlotte Pipe and Foundry, Plastics Division	
2. Site Name: Charlotte Pipe and Foundry, Plastics Division, Wildwood, Florida	
3. Facility Identification Number: 1190030 [ ] Unknown	
4. Facility Location: Street Address or Other Locator: County Road 124 A City: Wildwood County: Sumter Zip Code: 34785	
5. Relocatable Facility? [ ] Yes [X] No	6. Existing Permitted Facility? [X] Yes [ ] No

Application Contact

1. Name and Title of Application Contact: James Neubauer, Scientist
2. Application Contact Mailing Address: Organization/Firm: Aware Environmental® Inc. Street Address: 9305-J Monroe Road City: Charlotte State: NC Zip Code: 28270
3. Application Contact Telephone Numbers: Telephone: (704) 845 - 1697 Fax: (704) 845 - 1759

Application Processing Information (DEP Use)

1. Date of Receipt of Application:	
2. Permit Number:	

Purpose of Application

Air Operation Permit Application

This Application for Air Permit is submitted to obtain: (Check one)

[ ] Initial non-Title V air operation permit for one or more existing, but previously unpermitted, emissions units.

[ ] Initial non-Title V air operation permit for one or more newly constructed or modified emissions units.

Current construction permit number:_____

[ ] Non-Title V air operation permit revision to address one or more newly constructed or modified emissions units.

Current construction permit number:_____

Operation permit number to be revised:_____

[ ] Initial non-Title V air operation permit under Rule 62-210.300(2)(b), F.A.C., for an existing facility seeking classification as a synthetic non-Title V source.

Current operation/construction permit number(s):

_____

[ ] Non-Title V air operation permit revision for a synthetic non-Title V source. Give reason for revision; e.g., to address one or more newly constructed or modified emissions units.

Operation permit number to be revised:_____

Reason for revision:_____

Air Construction Permit Application

This Application for Air Permit is submitted to obtain: (Check one)

[X] Air construction permit to construct or modify one or more emissions units.

[ ] Air construction permit to make federally enforceable an assumed restriction on the potential emissions of one or more existing, permitted emissions units.

[ ] Air construction permit for one or more existing, but unpermitted, emissions units.

Owner/Authorized Representative

1. Name and Title of Owner/Authorized Representative:
   Reese Sumrall, Jr., Technical Manager
2. Owner/Authorized Representative Mailing Address:
   Organization/Firm: Charlotte Pipe and Foundry Company, Plastics Division
   Street Address: 4210 Old Charlotte Hwy.
   City: Monroe State: NC Zip Code: 28110
3. Owner/Authorized Representative Telephone Numbers:
   Telephone: (704) 291 - 3211 Fax: (704) 348 - 6406
4. Owner/Authorized Representative Statement:

I, the undersigned, am the owner or authorized representative of the facility addressed in this application. I hereby certify, based on information and belief formed after reasonable inquiry, that the statements made in this application are true, accurate and complete and that, to the best of my knowledge, any estimates of emissions reported in this application are based upon reasonable techniques for calculating emissions. The air pollutant emissions units and air pollution control equipment described in this application will be operated and maintained so as to comply with all applicable standards for control of air pollutant emissions found in the statutes of the State of Florida and rules of the Department of Environmental Protection and revisions thereof. I understand that a permit, if granted by the Department, cannot be transferred without authorization from the Department, and I will promptly notify the Department upon sale or legal transfer of any permitted emissions unit.*

Reese Sumrall Nov. 1, 2002

Signature Date

* Attach letter of authorization if not currently on file.

Professional Engineer Certification

1. Professional Engineer Name: Edward C. Fiss, Jr.
   Registration Number: 40330
2. Professional Engineer Mailing Address:
   Organization/Firm: Aware Environmental® Inc.
   Street Address: 9305-J Monroe Road
   City: Charlotte State: NC Zip Code: 28270
3. Professional Engineer Telephone Numbers:
   Telephone: (704) 845 - 1697 Fax: (704) 845 - 1759

FIGURE 3-A. PROCESS SCHEMATIC DIAGRAM

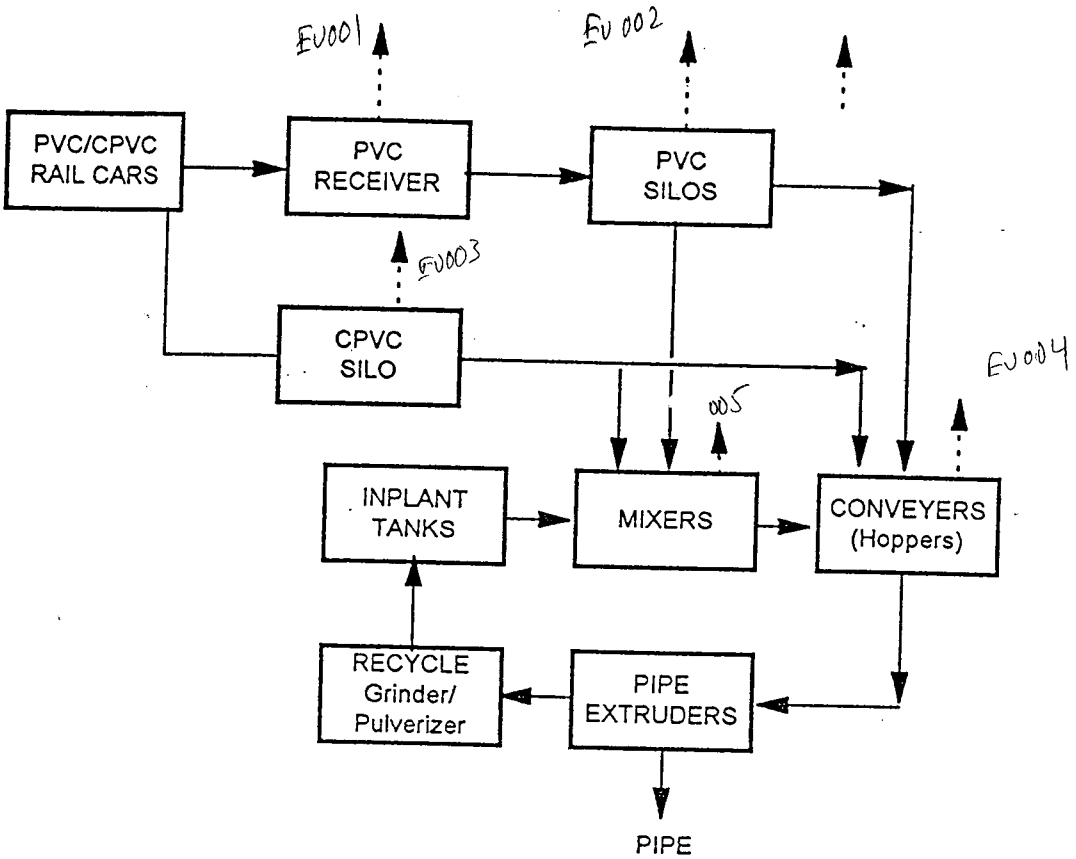

PRELIMINARY

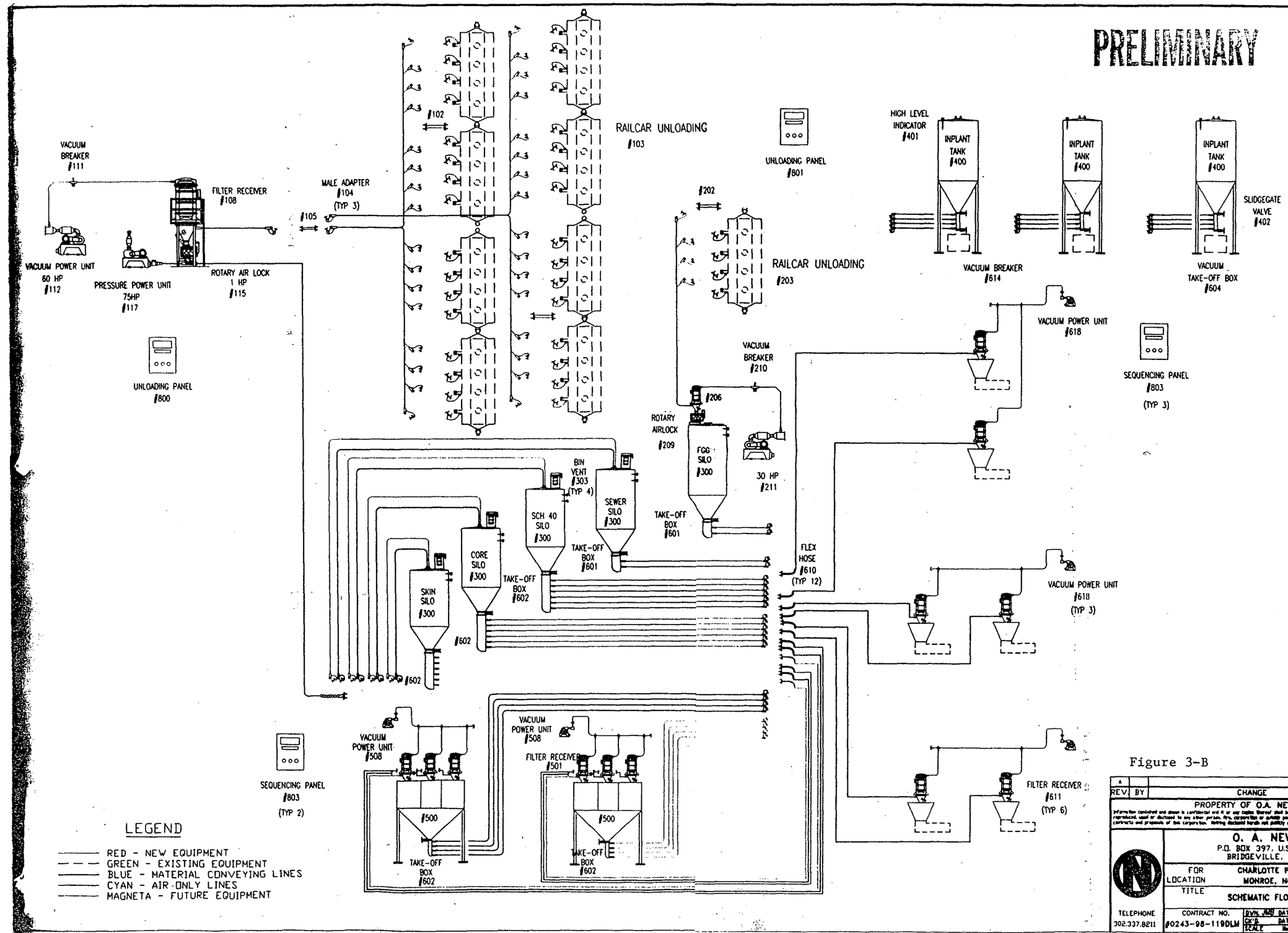

Figure 3-B

REV.	BY	CHANGE	DATE	CK'D
A				

PROPERTY OF O.A. NEWTON
Information contained and shown is confidential and it or any copies thereof shall be returned upon request. It is not to be copied, reproduced, used or disclosed to any other person, firm, corporation or outside party, but is to be used only with reference to contracts and proposals of this corporation. Nothing disclosed hereon not publicly available may be used without written permission.

O. A. NEWTON
P.O. BOX 397, U.S. RT. 13
BRIDGEVILLE, DE 19933
TELEPHONE 302.337.8211

FOR CHARLOTTE PIPE
LOCATION MONROE, NC
TITLE SCHEMATIC FLOW DIAGRAM

CONTRACT NO. #0243-98-119DLM
DWN. JAB DATE 5/13/98
CK'D DATE
SCALE None
SHEET 1 OF 1
D-XxXx
REV _

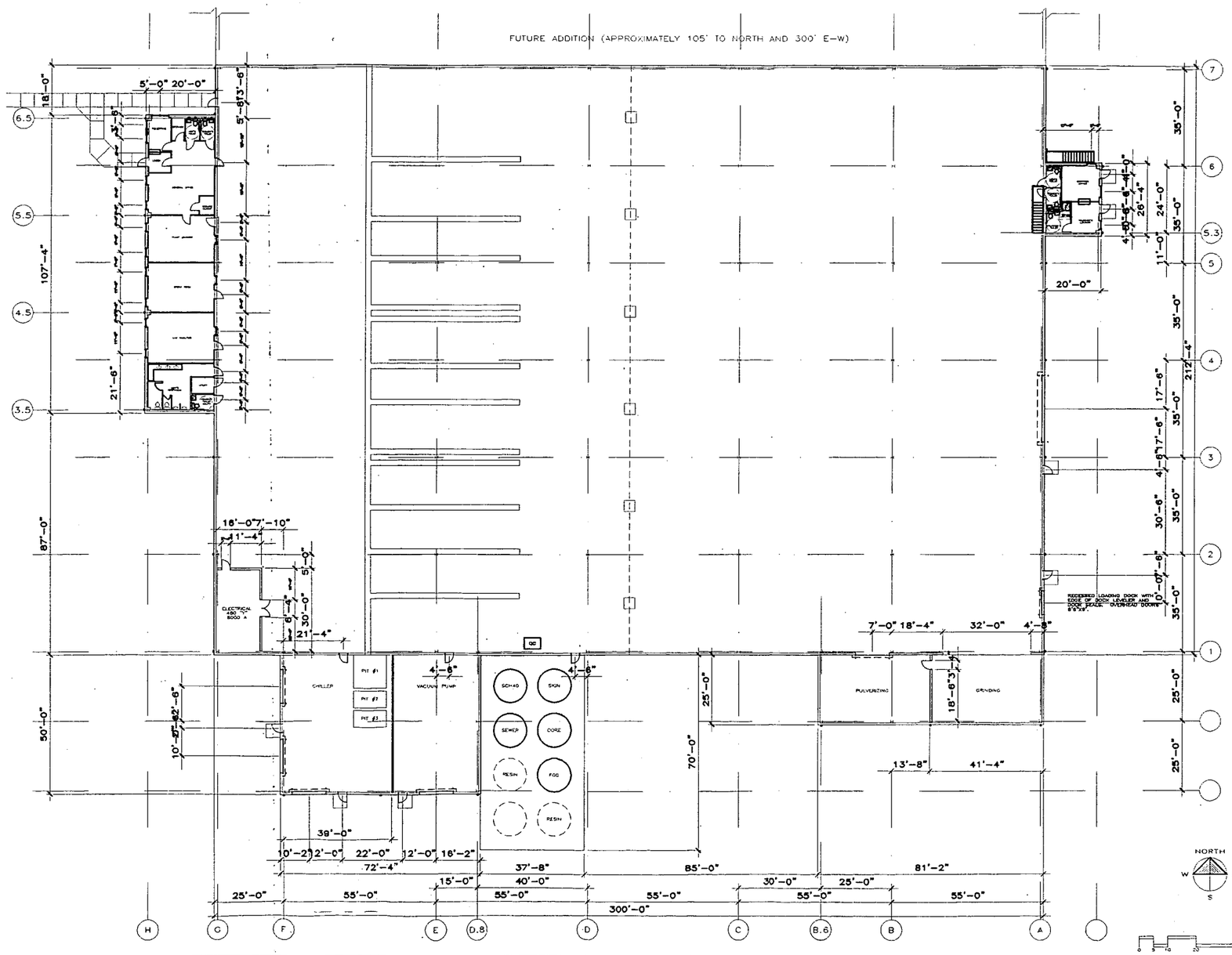

FLOOR PLAN 1"=20'-0"

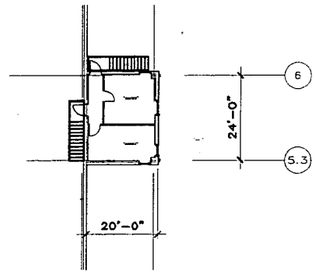

FIGURE 2-B
6/9/98

Nick Jones & Associates
Architects / Planners
1322 Bowman Street
Clermont, FL 34711
352 394-4700

consultants:

revisions

drawn by:
98CPFP

CHARLOTTE PIPE and FOUNDRY COMPANY
SUMTER COUNTY, FLORIDA

JOB XXX-98

sheet no. A-1 of ___

4. Professional Engineer Statement:

I, the undersigned, hereby certify, except as particularly noted herein, that:*

(1) To the best of my knowledge, there is reasonable assurance that the air pollutant emissions unit(s) and the air pollution control equipment described in this Application for Air Permit, when properly operated and maintained, will comply with all applicable standards for control of air pollutant emissions found in the Florida Statutes and rules of the Department of Environmental Protection; and

(2) To the best of my knowledge, any emission estimates reported or relied on in this application are true, accurate, and complete and are either based upon reasonable techniques available for calculating emissions or, for emission estimates of hazardous air pollutants not regulated for an emissions unit addressed in this application, based solely upon the materials, information and calculations submitted with this application.

If the purpose of this application is to obtain an air construction permit for one or more proposed new or modified emissions units (check here [X], if so), I further certify that the engineering features of each such emissions unit described in this application have been designed or examined by me or individuals under my direct supervision and found to be in conformity with sound engineering principles applicable to the control of emissions of the air pollutants characterized in this application.

If the purpose of this application is to obtain an initial air operation permit or operation permit revision for one or more newly constructed or modified emissions units (check here [ ], if so), I further certify that, with the exception of any changes detailed as part of this application, each such emissions unit has been constructed or modified in substantial accordance with the information given in the corresponding application for air construction permit and with all provisions contained in such permit.

Edward G. Fiss Jr. 11/08/02

Signature

Date

(seal)

* Attach any exception to certification statement.

EDWARD G. FISS JR. CERTIFICATE NO. 9003 STATE OF FLORIDA PROFESSIONAL ENGINEER

Scope of Application

Emissions Unit ID	Description of Emissions Unit	Permit Type	Processing Fee
Unknown	PVC/CPVC Compound Unloading from Railcar to Receivers	AC1F	$250.00

Application Processing Fee

Check one: [X] Attached - Amount: $ 250.00 [ ] Not Applicable

Construction/Modification Information

1. Description of Proposed Project or Alterations:

Charlotte Pipe and Foundry Company, Plastics Division, is planning to build a PVC and CPVC pipe extrusion plant in Wildwood, Florida. The planned facility includes PVC and CPVC compound handling systems and pipe extrusion processes. The primary air pollutant from the proposed facility is particulate matter (PM) from the PVC/CPVC raw material handling system. Volatile organic compounds from the pipe extrusion process is anticipated to be negligible.

2. Projected or Actual Date of Commencement of Construction: August, 1998

3. Projected Date of Completion of Construction: January, 1999

Application Comment

This permit application is to replace the original construction permit (Permit No. 1190030-001-AC). Much information included in this permit application will be reported the same as the earlier permit application, with changes coming in the construction phases and the maximum throughput for the facility.

II. FACILITY INFORMATION

A. GENERAL FACILITY INFORMATION

Facility Location and Type

1. Facility UTM Coordinates: Zone: 17 East (km): 399.0 North (km): 3,197			
2. Facility Latitude/Longitude: Latitude (DD/MM/SS): 28/53/45 Longitude (DD/MM/SS): 82/02/00			
3. Governmental Facility Code: 0	4. Facility Status Code: C	5. Facility Major Group SIC Code: 30	6. Facility SIC(s): 3084
7. Facility Comment (limit to 500 characters): This facility will be located at Country Road 124A, Wildwood, Florida 34785. This facility is a pipe extrusion facility.			

Facility Contact

1. Name and Title of Facility Contact: Reese Sumrall, Jr.
2. Facility Contact Mailing Address: Organization/Firm: Charlotte Pipe and Foundry Company, Plastics Division Street Address: 4210 Old Charlotte Hwy. City: Monroe State: NC Zip Code: 28110
3. Facility Contact Telephone Numbers: Telephone: (704) 291 - 3211 Fax: (704) 348 - 6406

Facility Regulatory Classifications

Check all that apply:

1. [ ] Small Business Stationary Source?	[X] Unknown
2. [ ] Synthetic Non-Title V Source?	
3. [ ] Synthetic Minor Source of Pollutants Other than HAPs?	
4. [ ] Synthetic Minor Source of HAPs?	
5. [ ] One or More Emissions Units Subject to NSPS?	
6. [ ] One or More Emission Units Subject to NESHAP Recordkeeping or Reporting?	
7. Facility Regulatory Classifications Comment (limit to 200 characters): This facility is a minor source for particulate matter.	

Rule Applicability Analysis

Florida Administrative Code

B. FACILITY POLLUTANTS

List of Pollutants Emitted

1. Pollutant Emitted	2. Pollutant Classif.	3. Requested Emissions Cap lb/hour	tons/year	4. Basis for Emissions Cap	5. Pollutant Comment
PM/PM10	B	17.2	4.5	Rule and other	Requested hourly emission cap is based on Rule 62-296-310 and pneumatic conveyor's max rate of 12.5 ton/hr (PVC raw material). The annual emission cap is requested so the annual particulate emissions will be below five (5) tons a year. The actual max potential is approximately 0.32 tons/yr.

C. FACILITY SUPPLEMENTAL INFORMATION

Supplemental Requirements

1. Area Map Showing Facility Location: [X] Attached, Document ID:_____ [ ] Not Applicable [ ] Waiver Requested
2. Facility Plot Plan: [X] Attached, Document ID:_____ [ ] Not Applicable [ ] Waiver Requested
3. Process Flow Diagram(s): [X] Attached, Document ID:_____ [ ] Not Applicable [ ] Waiver Requested
4. Precautions to Prevent Emissions of Unconfined Particulate Matter: [ ] Attached, Document ID:_____ [ ] Not Applicable [X] Waiver Requested
5. Supplemental Information for Construction Permit Application: [ ] Attached, Document ID:_____ [X] Not Applicable
6. Supplemental Requirements Comment: Not applicable to this facility.

III. EMISSIONS UNIT INFORMATION

A separate Emissions Unit Information Section (including subsections A through G as required) must be completed for each emissions unit addressed in this Application for Air Permit. If submitting the application form in hard copy, indicate, in the space provided at the top of each page, the number of this Emissions Unit Information Section and the total number of Emissions Unit Information Sections submitted as part of this application.

A. GENERAL EMISSIONS UNIT INFORMATION

Emissions Unit Description and Status

1. Type of Emissions Unit Addressed in This Section: (Check one)

[ ] This Emissions Unit Information Section addresses, as a single emissions unit, a single process or production unit, or activity, which produces one or more air pollutants and which has at least one definable emission point (stack or vent).

[X] This Emissions Unit Information Section addresses, as a single emissions unit, a group of process or production units and activities which has at least one definable emission point (stack or vent) but may also produce fugitive emissions.

[ ] This Emissions Unit Information Section addresses, as a single emissions unit, one or more process or production units and activities which produce fugitive emissions only.

2. Description of Emissions Unit Addressed in This Section (limit to 60 characters):

PVC and CPVC raw material handling system.

3. Emissions Unit Identification Number:
ID:
[ ] No ID
[X] ID Unknown

4. Emissions Unit Status Code: C	5. Initial Startup Date: 01/99	6. Emissions Unit Major Group SIC Code: 30

7. Emissions Unit Comment: (Limit to 500 Characters)

This PVC/CPVC material handling system consists of pneumatic conveyers, transfer stations, storage silos, mixing stations, and transfer hoppers, and associated particulate control devices-baghouse filters. The primary air pollutant from this system is anticipated to be particulate matter.

Emissions Unit Control Equipment

1. Control Equipment/Method Description (limit to 200 characters per device or method):

   The air pollution control devices are baghouse filters.

2. Control Device or Method Code(s): Baghouse filters or 018

Emissions Unit Details

1. Package Unit:
   Manufacturer: O.A. Newton
   Model Number: Not Available
2. Generator Nameplate Rating: Not Applicable
3. Incinerator Information: Not Applicable

Dwell Temperature:	°F
Dwell Time:	seconds
Incinerator Afterburner Temperature:	°F

Emissions Unit Operating Capacity and Schedule

1. Maximum Heat Input Rate: Not Applicable
2. Maximum Incineration Rate: Not Applicable
3. Maximum Process or Throughput Rate: 80,000,000 lbs/yr.
4. Maximum Production Rate: 80,000,000 lbs/yr.
5. Requested Maximum Operating Schedule:

24 hours/day	7 days/week
52 weeks/year	8760 hours/year

6. Operating Capacity/Schedule Comment (limit to 200 characters):

   The maximum process rate is a five (5) year projection.

B. EMISSION POINT (STACK/VENT) INFORMATION

Emission Point Description and Type

1. Identification of Point on Plot Plan or Flow Diagram? EP1-EP14	2. Emission Point Type Code: 3	
3. Descriptions of Emission Points Comprising this Emissions Unit for VE Tracking (limit to 100 characters per point): EP1 through EP14 are emissions points for the 21 baghouse filters of the PVC/CPVC material handling system. Only EP2 through EP8 are vented directly to the atmosphere. Others are vacuum exhausts.		
4. ID Numbers or Descriptions of Emission Units with this Emission Point in Common: Not Applicable		
5. Discharge Type Code: H	6. Stack Height: See the Attached Table #1	7. Exit Diameter: See the Attached Table #1
8. Exit Temperature: Ambient °F	9. Actual Volumetric Flow Rate: See the attached Table #1	10. Water Vapor: Not Applicable %
11. Maximum Dry Standard Flow Rate: See the attached Table #1	12. Nonstack Emission Point Height: Ground Level	
13. Emission Point UTM Coordinates: Not Applicable Zone: East (km): North (km):		
14. Emission Point Comment (limit to 200 characters): See the attached Figure #3 – Process Schematic Diagram		

C. SEGMENT (PROCESS/FUEL) INFORMATION

Segment Description and Rate: Segment _____ of _____

1. Segment Description (Process/Fuel Type) (limit to 500 characters): Not Applicable		
2. Source Classification Code (SCC):	3. SCC Units:	
4. Maximum Hourly Rate:	5. Maximum Annual Rate:	6. Estimated Annual Activity Factor:
7. Maximum % Sulfur:	8. Maximum % Ash:	9. Million Btu per SCC Unit:
10. Segment Comment (limit to 200 characters):		

Segment Description and Rate: Segment _____ of _____

1. Segment Description (Process/Fuel Type) (limit to 500 characters): Not Applicable		
2. Source Classification Code (SCC):	3. SCC Units:	
4. Maximum Hourly Rate:	5. Maximum Annual Rate:	6. Estimated Annual Activity Factor:
7. Maximum % Sulfur:	8. Maximum % Ash:	9. Million Btu per SCC Unit:
10. Segment Comment (limit to 200 characters):		

Emissions Unit Information Section _____ **of** _____

Pollutant Detail Information Page _____ **of** _____

D. EMISSIONS UNIT POLLUTANT DETAIL INFORMATION

Potential Emissions

1. Pollutant Emitted: PM	2. Pollutant Regulatory Code: EL	
3. Primary Control Device Code: 018	4. Secondary Control Device Code: N/A	5. Total Percent Efficiency of Control: 99%
6. Potential Emissions: 17.2 lb/hour 4.5 tons/year		7. Synthetically Limited? [ ] NO
8. Emission Factor: See the construction permit application Reference: See attachment A		9. Emissions Method Code: 2, 4
10. Calculation of Emissions (limit to 600 characters): See attachment A.		
11. Pollutant Potential Emissions Comment (limit to 200 characters): See attachment A.		

Allowable Emissions Allowable Emissions _____ of _____

1. Basis for Allowable Emissions Code: RULE and OTHER (maximum capacity)	2. Future Effective Date of Allowable Emissions: N/A
3. Requested Allowable Emissions and Units: See Field 4	4. Equivalent Allowable Emissions: 17.2 lb/hour 4.5 tons/year
5. Method of Compliance (limit to 60 characters): PVC/CPVC throughput and bagfilter control efficiency	
6. Allowable Emissions Comment (Desc. of Operating Method) (limit to 200 characters): The hourly allowable emissions limits are based on the maximum material handling capacity and Rule 62-296.310. The annual allowable emission limit is requested so that the emissions will be below five (5) tons per year. The actual maximum annual emissions are 0.32 tons per year.	

E. VISIBLE EMISSIONS INFORMATION
(Only Emissions Units Subject to a VE Limitation)

Visible Emissions Limitation: Visible Emissions Limitation _____ of _____

1. Visible Emissions Subtype: VE5	2. Basis for Allowable Opacity: [X] Rule [ ] Other
3. Requested Allowable Opacity: Normal Conditions: 5 % Exceptional Conditions: % Maximum Period of Excess Opacity Allowed: min/hour	
4. Method of Compliance: EPA Method 9	
5. Visible Emissions Comment (limit to 200 characters): Charlotte Pipe and Foundry Company – Plastics Division, elects an alternative standards of 5% opacity for the PVC/CPVC material handling system, instead of particulate emissions compliance test, because the facility meets the conditions specified in Rule 62-297-620.	

F. CONTINUOUS MONITOR INFORMATION
(Only Emissions Units Subject to Continuous Monitoring)

Continuous Monitoring System: Continuous Monitor _____ of _____

1. Parameter Code: Not Applicable	2. Pollutant(s):
3. CMS Requirement: [ ] Rule [ ] Other	
4. Monitor Information: Manufacturer: Model Number: Serial Number:	
5. Installation Date:	6. Performance Specification Test Date:
7. Continuous Monitor Comment (limit to 200 characters):	

G. EMISSIONS UNIT SUPPLEMENTAL INFORMATION

Supplemental Requirements

1. Process Flow Diagram [X] Attached, Document ID: Figure 3 [ ] Not Applicable [ ] Waiver Requested
2. Fuel Analysis or Specification [ ] Attached, Document ID:_____ [X] Not Applicable [ ] Waiver Requested
3. Detailed Description of Control Equipment [X] Attached, Document ID: Attachment A [ ] Not Applicable [ ] Waiver Requested
4. Description of Stack Sampling Facilities [ ] Attached, Document ID:_____ [ ] Not Applicable [X] Waiver Requested
5. Compliance Test Report [ ] Attached, Document ID:_____ [ ] Previously submitted, Date:_____ [X] Not Applicable
6. Procedures for Startup and Shutdown [ ] Attached, Document ID:_____ [X] Not Applicable [ ] Waiver Requested
7. Operation and Maintenance Plan [X] Attached, Document ID:Attachment B [ ] Not Applicable [ ] Waiver Requested
8. Supplemental Information for Construction Permit Application [ ] Attached, Document ID:_____ [X] Not Applicable
9. Other Information Required by Rule or Statute [ ] Attached, Document ID:_____ [X] Not Applicable
10. Supplemental Requirements Comment:

TABLES

TABLE 1. LIST OF PM/PM10 EMISSION CONTROL DEVICES AND EMISSION UNITS

EMISSION UNIT	EMISSION POINT DESCRIPTION	CONTROL DEVICE	# OF UNITS	MANUFACTURER	MINIMUM CONTROL EFFICIENCY	FILTER CLOTH AREA
E.U. 001	Railcar Unloading	Baghouse Filter	1	O.A. Newton	99%	360 sq. Ft.
E.U. 002	PVC Storage Silos	Baghouse Filter	6	O.A. Newton	99%	270 sq. Ft.
E.U. 004	Extruder Receiver	Baghouse Filter	7	O.A. Newton	99%	135 sq. Ft.
E.U. 004	Extruder Receiver	Baghouse Filter	2	Universal Dynamics	99%	44.4 sq. Ft.
E.U. 005	Recycled Material Storage Silos	Baghouse Filter	3	O.A. Newton	99%	112.5 sq. Ft.
E.U. 005	Waste Grinder (Pulverizer) Receiver	Baghouse Filter	1	O.A. Newton	99%	112.5 sq. Ft.
E.U. 005	Blender (Mixer) Receiver	Baghouse Filter	4	O.A. Newton	99%	135 sq. Ft.

FIGURES

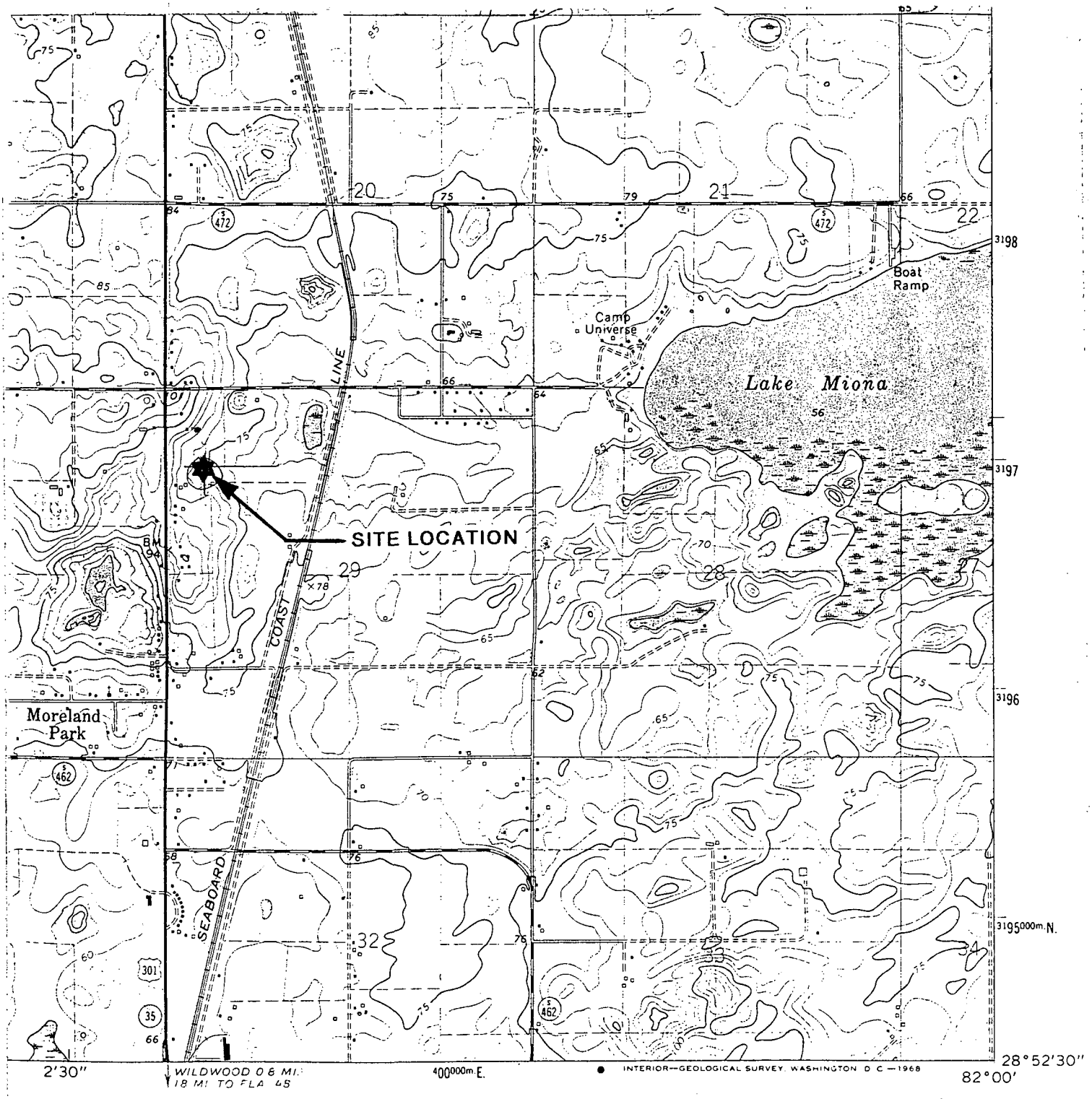

SCALE: 1:24000

1 1/2 0 1 MILE

1000 0 2000 4000 6000 8000 FEET

N

CHARLOTTE PIPE & FOUNDRY
WILDWOOD, FLORIDA

REFERENCE:
BASE MAP TAKEN FROM USGS QUADRANGLE MAP:
OXFORD, FLORIDA. DATED 1966.

FIGURE–1
SITE LOCATION MAP

AWARE ENVIRONMENTAL INC

AEI PROJECT No. N188–40

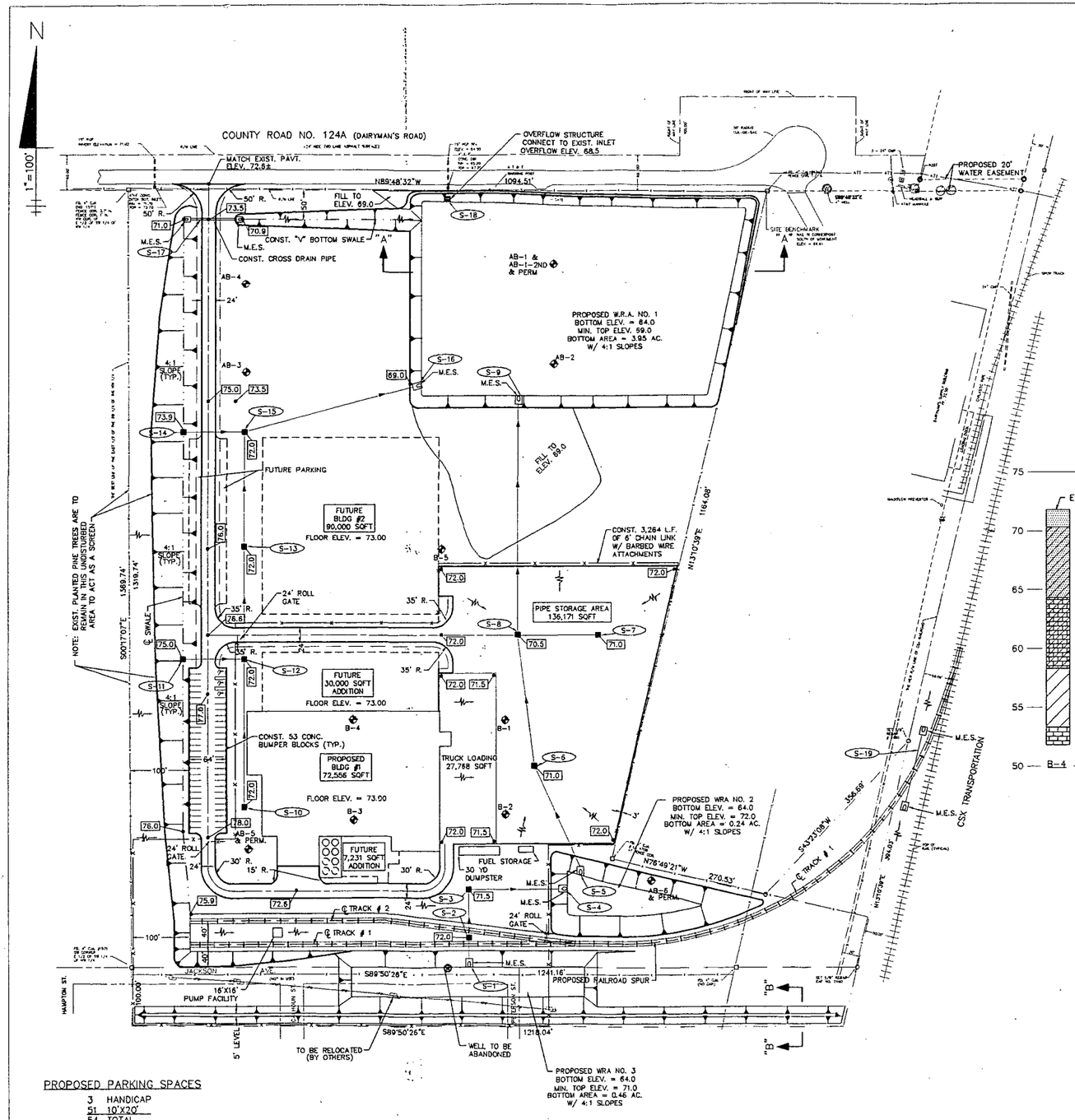

PROPOSED PARKING SPACES

3 HANDICAP
51 10'X20'
54 TOTAL

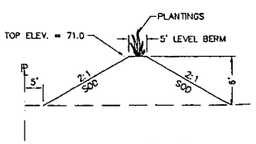

SECTION "B-B"
SCALE: 1"=20', HOR.
1"=20', VERT.

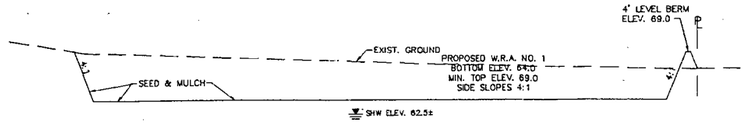

SECTION "A-A"
SCALE: 1"=50', HOR.
1"=5', VERT.

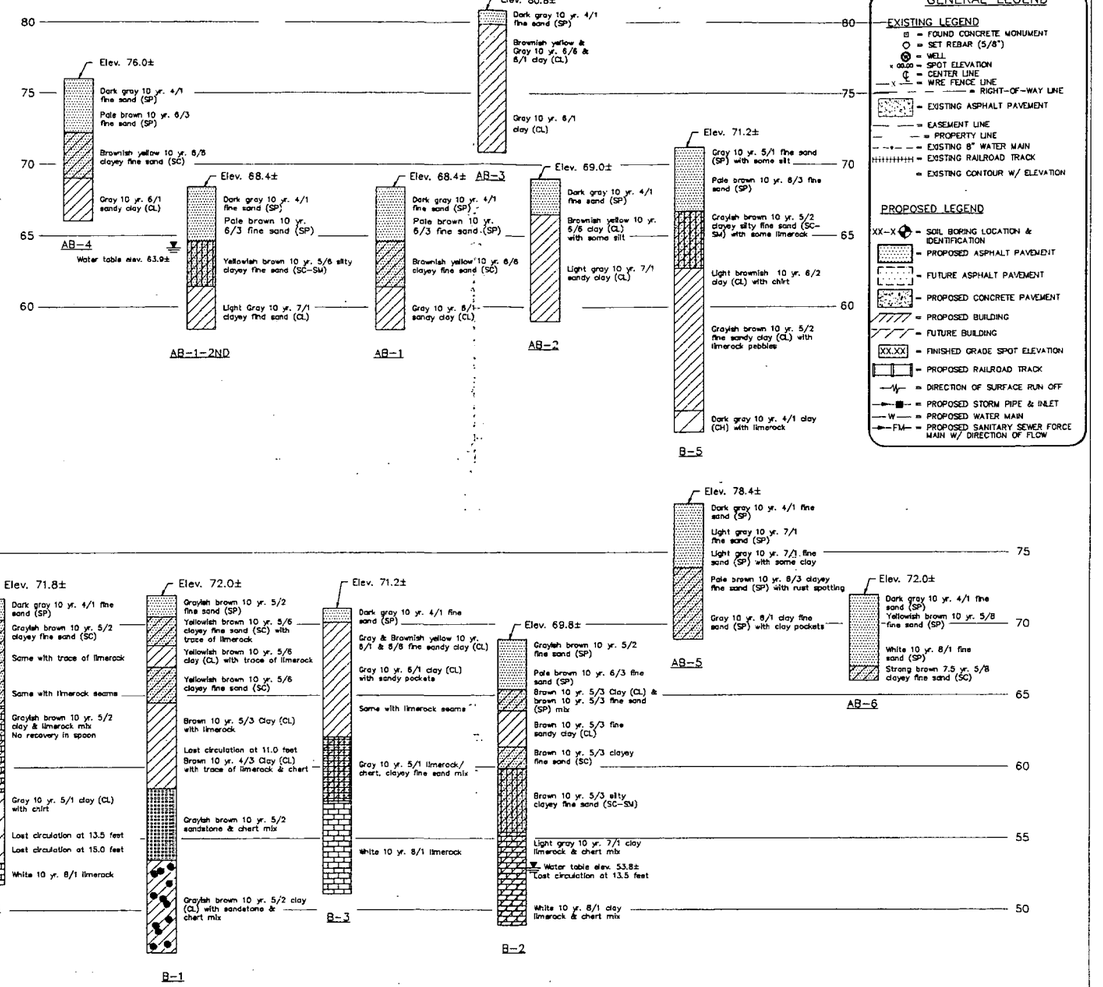

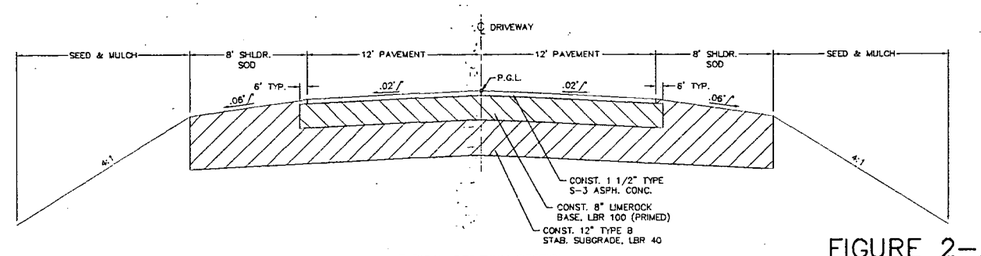

TYPICAL DRIVEWAY SECTION
SCALE: 1"=5', HOR.
1"=2', VERT.

GENERAL LEGEND

EXISTING LEGEND
- = FOUND CONCRETE MONUMENT
- = SET REBAR (5/8")
- = WELL
- = SPOT ELEVATION
- = CENTER LINE
- = WIRE FENCE LINE
- = RIGHT-OF-WAY LINE
- = EXISTING ASPHALT PAVEMENT
- = EASEMENT LINE
- = PROPERTY LINE
- = EXISTING 8" WATER MAIN
- = EXISTING RAILROAD TRACK
- = EXISTING CONTOUR W/ ELEVATION

PROPOSED LEGEND
- = SOIL BORING LOCATION & IDENTIFICATION
- = PROPOSED ASPHALT PAVEMENT
- = FUTURE ASPHALT PAVEMENT
- = PROPOSED CONCRETE PAVEMENT
- = PROPOSED BUILDING
- = FUTURE BUILDING
- = FINISHED GRADE SPOT ELEVATION
- = PROPOSED RAILROAD TRACK
- = DIRECTION OF SURFACE RUN OFF
- = PROPOSED STORM PIPE & INLET
- = PROPOSED WATER MAIN
- = PROPOSED SANITARY SEWER FORCE MAIN W/ DIRECTION OF FLOW

FIGURE 2-A
Paving/Grading/ Drainage Site Plan

PRELIMINARY

H & B CONSULTING ENGINEERS, INC.
P.O. Box 520
410B East Belt Avenue
Bushnell, Florida 33513
Phone : (352) 793-2113

Charlotte Pipe - New Industrial Plant Site Plan

REVISIONS		
DATE	DESCRIPTION	BY

Drawn: TFW | Checked: DCH | Date: 6/98 | Scale: 1"=100' | Sheet 2 Of 3

Working Date: 6/5/98
/97-170A/97170A-P.DWG

ATTACHMENT A
EMISSION CALCULATIONS AND EMISSION FACTOR SELECTION

Charlotte Pipe & Foundry Company
Wildwood, North Carolina

TABLE A-1 summarizes emissions from the proposed Charlotte Pipe and Foundry Company (CPFC) – Wildwood Facility. Emissions are calculated based on the processes described in **Section 1 – Process Description**. Emission factor selection is discussed as below.

Taking a conservative approach, particulate matter (PM) emissions from CPFC material transfer stations and storage silos were modeled using uncontrolled particulate emission factors for concrete batching found in Table 8.10-1 of the USEPA's AP-42, *Compilation of Air Pollutant Emission Factors*. An emission factor of 0.24 lb/ton was chosen to model the PM emissions from unloading bulk material to the material transfer stations and an emission factor of 0.27 lb/ton was chosen to estimate the PM emissions from the pneumatic conveyance of bulk materials to CPFC's storage silos.

A study was conducted at Charlotte Pipe and Foundry Company, Plastics Division, Monroe, North Carolina facility to develop a site-specific PM/PM10 emission factor to estimate the PM/PM10 emissions from CPFC's PVC mixing stations. It is believed that the developed emission factor is representative for the same type of operation at the proposed CPFC Wildwood, Florida facility. A daily record of the amount of material collected by each mixer's bagfilter and the corresponding material mixed was kept. An uncontrolled PM/PM10 emission rate for the mixing process was then back-calculated by assuming, as a conservative estimate, a bagfilter control efficiency of 99 percent. **Table A-2** presents the study's raw material data for mixers 1, 2, and 3, and estimates the daily controlled PM/PM10 emission rate [uncontrolled emission rate (lb/day) = material collected (lb/day) / (1 – control efficiency)]. **Table A-2** also presents the estimated PM/PM10 uncontrolled emission factor for the mixing process [uncontrolled emission factor (lb/ton) = uncontrolled emission rate / material mixed (lb/day)]. To account for sample variation, a simple regression analysis was performed on the mixers' estimated uncontrolled emission rates (lb/day) and mixing rates (ton/day) to determine the best fitting line to raw data.

Figure A-1 shows a plot of the mixers' daily emission rates verses daily mixing rates, and the best fit regression line. The slope of the regression line represents the best estimate of the emission factor associated with the mixing process. Based on the regression analysis a PM/PM10 emission factor of 0.77 lb/ton was used to estimate the emissions from CPFC's mixing stations.

CPFC's material recycling activities involve the grinding or pulverizing of waste pipe back into a useable form. A controlled emission factor for the crushing and screening of sodium carbonate found in the USEPA's Factor Information Retrieval System (FIRE) was converted to an uncontrolled emission factor and used to estimate the PM/PM10 emissions from CPFC's recycling activities. By assuming a 99.5 percent control efficiency for the sodium carbonate crushing and screening process, the controlled emission factor of 0.001 kg/Mg found in FIRE was converted to an uncontrolled emission factor of 0.4 lb/ton (0.001 kg/Mg x 2.0 Mg-lb/kg-ton / (1-0.995)). The emission factor of 0.4 lb/ton was used to estimate the uncontrolled PM/PM10 emissions from CPFC's recycling activities.

Supporting documentation for the emission factors used to estimate CPFC's PM/PM10 emissions are attached for reference.

TABLE A-1
MATERIAL HANDLING EMISSIONS SUMMARY
PVC AND CPVC HANDLING
Charlotte Pipe & Foundry - Plastics Division
Wildwood, Florida

PARTICULATE EMISSION ESTIMATE

PROCESS	HOURS OF OPERATION ACTUAL (hr/yr)	HOURS OF OPERATION POTENTIAL (hr/yr)	MATERIAL THROUGHPUT POTENTIAL (lbs/yr)	CONTROL DEVICE	CONTROL EFFICIENCY	ESTIMATED PM/PM10 UNCONTROLLED EMISSION FACTOR (lb/ton)	EMISSION ESTMATES FOR PM/PM10 BEFORE CONTROL POTENTIAL (ton/yr)	EMISSION ESTMATES FOR PM/PM10 AFTER CONTROL POTENTIAL (ton/yr)
PVC - Pipe Extrusion								
Transfer Station	8472	8760	66,500,000.00	Bagfilter	99.00%	0.24	3.990	0.040
Storage Silo	8472	8760	66,500,000.00	Bagfilter	99.00%	0.27	4.489	0.045
Mixing Station	8472	8760	66,500,000.00	Bagfilter	99.00%	0.77	12.801	0.128
Hoppers for Extrusion	8472	8760	69,700,000.00	Bagfilter	99.00%	0.27	4.705	0.047
Recycle Waste - Ground/Pulverized	8472	8760	3,200,000.00	Bagfilter	99.00%	0.4	0.320	0.003
Subtotal							**26.30**	**0.26**
CPVC - Pipe Extrusion								
Transfer Station	8472	8760	13,500,000.00	Bagfilter	99.00%	0.24	0.810	0.008
Storage Silo	8472	8760	13,500,000.00	Bagfilter	99.00%	0.27	0.911	0.009
Mixing Station	8472	8760	13,500,000.00	Bagfilter	99.00%	0.77	2.599	0.026
Hoppers for Extrusion	8472	8760	14,175,000.00	Bagfilter	99.00%	0.27	0.957	0.010
Recycle Waste - Ground/Pulverized	8472	8760	675,000.00	Bagfilter	99.00%	0.4	0.068	0.001
Subtotal							**5.34**	**0.05**
TOTAL							**31.65**	**0.32**

VOC EMISSION ESTIMATE

Maximum material throughput:	80,000,000.00	lbs/yr
PVC/CPVC vinyl chloride (VOC) residual:	< 0.3 ppm wt.	
Maximum vinyl chloride (VOC) emissions:	24	lbs/yr

TABLE A–2

MIXING EMISSION FACTOR CALCULATION

Charlotte Pipe & Foundry Company - Plastics Division

Date	MIXER NO. 1				
	Material Collected in Bagfilter (lb)	Material Processed by Mixer (tons)	Collection Efficiency (1) (%)	Uncontrolled Emission Rate (2) (lb/day)	Uncontrolled Emission Factor(3) (lb/ton)
12/12/94	22.00	48.10	99	22.22	0.46
12/13/94	61.00	63.21	99	61.62	0.97
12/14/94	43.00	79.82	99	43.43	0.54
12/15/94	94.00	93.66	99	94.95	1.01
12/16/94	44.00	54.84	99	44.44	0.81
12/17/94	64.00	66.90	99	64.65	0.97
12/18/94	52.00	101.92	99	52.53	0.52
12/19/94	60.00	59.73	99	60.61	1.01

Date	MIXER NO. 2				
	Material Collected in Bagfilter (lb)	Material Processed by Mixer (tons)	Collection Efficiency (1) (%)	Uncontrolled Emission Rate (2) (lb/day)	Uncontrolled Emission Factor(3) (lb/ton)
12/12/94	14.00	39.98	99	14.14	0.35
12/13/94	46.00	78.54	99	46.46	0.59
12/14/94	23.00	55.22	99	23.23	0.42
12/15/94	46.00	48.80	99	46.46	0.95
12/16/94	14.00	51.54	99	14.14	0.27
12/17/94	36.00	50.46	99	36.36	0.72
12/18/94	14.00	78.02	99	14.14	0.18
12/19/94	30.00	74.25	99	30.30	0.41

Date	MIXER NO. 3				
	Material Collected in Bagfilter (lb)	Material Processed by Mixer (tons)	Collection Efficiency (1) (%)	Uncontrolled Emission Rate (2) (lb/day)	Uncontrolled Emission Factor(3) (lb/ton)
12/12/94	37.00	49.93	99	37.37	0.75
12/13/94	105.00	110.39	99	106.06	0.96
12/14/94	41.00	50.63	99	41.41	0.82
12/15/94	132.00	45.18	99	133.33	2.95
12/16/94	85.00	113.56	99	85.86	0.76
12/17/94	118.00	79.69	99	119.19	1.50
12/18/94	52.00	67.67	99	52.53	0.78
12/19/94	28.00	66.40	99	28.28	0.43

NOTES:

(1) Bagfilter control efficiency was conservatively estimated at 99 percent .

(2) Uncontrolled emission rate (lb/day) = material collected in bagfilter (lb/day) + control efficiency.

(3) Uncontrolled emission factor (lb/ton) = uncontrolled emission rate (lb/day) + material processed by mixer (ton/day).

1/5/95

FILE: FACTOR.XLS

FIGURE A-1

ESTIMATED UNCONTROLLED MIXER EMISSION RATES
VS. MATERIAL PROCESS RATES
Charlotte Pipe & Foundry Company - Plastics Division

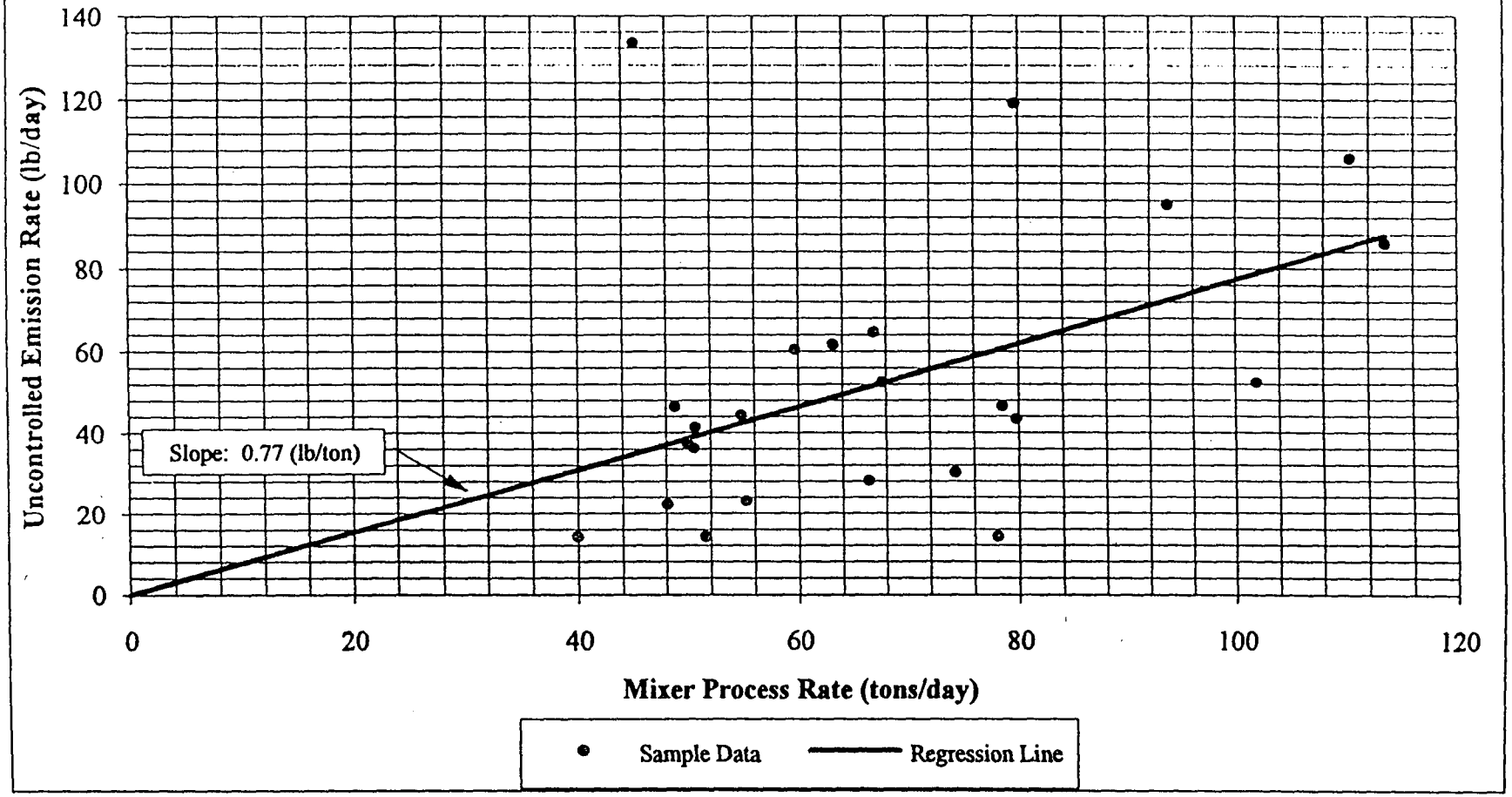

1/5/95
File: FACTOR.XLS Chart 4

crush

EMISSION FACTOR : 1.00000E-3
UNITS : kg/Mg
UNITS EXTENTION : Sodium carbamate produced
POLLUTANT NAME : PM (Particulate Matter)
CAS NUMBER :
SIC CODE : 2812
SIC NAME : Alkalies and chlorine
SCC : 30102103
SCC NAME : Chemical Manufacturing
Chemical Manufacturing
Sodium Carbonate
Trona Crushing/ Screening
SOURCE NAME : (See SCC for Source description)
PROCESS NAME : (See SCC for Process description)
REFERENCE NUMBER : 1068
SECONDARY REF # :
RESEARCHER : PES
DATE : 07/28/1993
CONTROL DEVICE 1 : MISCELLANEOUS CONTROL DEVICES
CONTROL DEVICE 2 :
DATA SOURCE : AP42_UF
FACTOR QUALITY : E
NOTES : Controlled by venturi scrubber, ESP, and/or
cyclone.
LOCATION :
METHODS :
RANGE : 6.5E-4 to 1.5E-3
PR_PARMS :
TESTS :
CORRECTION :
SEL_ID : CRI_D_1912

Table 11.12-2 (English Units). EMISSION FACTORS FOR CONCRETE BATCHING[a,b]

Source (SCC)	Filterable[c]			Condensable PM[d]	
	PM	RATING	PM-10	Inorganic	Organic
Sand and aggregate transfer to elevated bin (3-05-011-06)[e]	0.029 (0.05)	E	ND	ND	ND
Cement unloading to elevated storage silo					
Pneumatic[f]	0.27 (0.07)	D	ND	ND	ND
Bucket elevator (3-05-011-07)[g]	0.24 (0.06)	E	ND	ND	ND
Weigh hopper loading (3-05-011-08)[h]	0.02 (0.04)	E	ND	ND	ND
Mixer loading (central mix) (3-05-011-09)[h]	0.04 (0.07)	E	ND	ND	ND
Truck loading (truck mix) (3-05-011-10)[h]	0.02 (0.04)	E	ND	ND	ND
Vehicle traffic (unpaved roads) (3-05-011-__)[i]	16 (0.02)	C	ND	ND	ND
Wind erosion from sand and aggregate storage piles (3-05-011-__)[j]	3.5[k] (0.1)[l]	D	ND	ND	ND
Total process emissions (truck mix) (3-05-011-__)[m]	0.1 (0.2)	E	ND	ND	ND

[a] Factors represent uncontrolled emissions unless otherwise noted. All emission factors are in lb/ton (lb/yd^3) of material mixed unless noted. SCC = Source Classification Code. ND = no data.

[b] Based on a typical yd^3 weighing 1.818 kg (4,000 lb) and containing 227 kg (500 lb) cement, 564 kg (1,240 lb) sand, 864 kg (1,900 lb) coarse aggregate, and 164 kg (360 lb) water.

[c] Filterable PM is that PM collected on or prior to the filter of an EPA Method 5 (or equivalent) sampling train.

[d] Condensable PM is that PM collected in the impinger portion of a PM sampling train.

[e] Reference 6.

[f] For uncontrolled emissions measured before filter. Based on 2 tests on pneumatic conveying controlled by a fabric filter.

[g] Reference 7. From test of mechanical unloading to hopper and subsequent transport of cement by enclosed bucket elevator to elevated bins with fabric socks over bin vent.

[h] Reference 5. Engineering judgment, based on observations and emission tests of similar controlled sources.

[i] From Section 13.2.1, with k = 0.8, s = 12, S = 20, W = 20, w = 14, and p = 100; units of lb/vehicle miles traveled; based on facility producing 23,100 m^3/yr (30,000 yd^3/yr) of concrete, with average truck load of 6.2 m^3 (8 yd^3) and plant road length of 161 meters (0.1 mile).

[j] From Section 11.19.1, for emissions <30 micrometers from inactive storage piles.

[k] Units of lb/acre/day.

[l] Assumes 1,011 m^2 (1/4 acre) of sand and aggregate storage at plant with production of 23,000 m^3/yr (30,000 yd^3/yr).

[m] Based on pneumatic conveying of cement at a truck mix facility; does not include vehicle traffic or wind erosion from storage piles.

Predictive equations that allow for emission factor adjustment based on plant-specific conditions are given in Chapter 13. Whenever plant specific data are available, they should be used in lieu of the fugitive emission factors presented in Table 11.12-1.

ATTACHMENT B

OPERATION AND MAINTENANCE PLAN

O. A. NEWTON

Material Control Systems Group

REVERSE PULSE FILTERS

Operating Instructions

RECEIVING YOUR UNIT

Prior to accepting shipment, care must be taken to inspect all equipment received both for proper count and damage. Any and all irregularities must be noted on carrier's copy of the shipping receipt to assist in settling any claims for damage or shortages. All equipment is shipped F.O.B. Point of Origin, whether on a prepaid or collect basis.

ANY CLAIM FOR DAMAGE IN TRANSIT OR SHORTAGES MUST BE BROUGHT AGAINST THE CARRIER BY THE PURCHASER.

INSPECTION OF UNIT

Housing: Particular attention should be paid to the sheet metal housing of your collector. Unit should be inspected for dents and cracks or rips. Dented housing may seriously affect the structural integrity of the unit. Unit should be checked against the certified drawings for correctness and the manufacturer notified immediately. No corrections may be made without authority of the manufacturer.

Components: A count should be made of all pieces received, and this should be verified against the carrier's manifest. Boxes should be inspected for rough handling which may have resulted in hidden damage.

SETTING UP YOUR UNIT

Housing: Lifting lugs are normally provided for your convenience in handling the dust collector. If these cannot be used, proper care must be taken to assure safe moving and precautions taken to prevent damage to the housing or components.

Electrical: A 120 V. 60 cycle power wiring circuit must be connected to the filter's timer. The timer must be wired according to timer instruction sheet enclosed. Check solenoid wiring and program jumper. Program jumper must be installed in #3 position for (3) solenoid filters, #4 position for (4) solenoid filters and so on. Set "on" time at minimum setting of 50 milliseconds. Set "off" time at approximately 10 seconds. Refer to timer sheet attached. Then follow standard start up instructions.

U.S. Rte 13, P.O. Box 397, Bridgeville, Delaware 19933 (302) 337-8211 fax:(302) 337-3780

Compressed Air: All compressed air piping leading to the collector must be purged prior to hooking up to the distribution header located on the unit. 90 - 100 PSIG of clean, dry air is required for your unit to operate properly. It is recommended that a shut-off valve, a pressure regulator, and an inline filter should be installed immediately upstream from the distribution header.

If excessive moisture is present an after cooler and dessicant dryer is strongly recommended.

Assembling bags and cages into housing: Please refer to individual instruction sheet for filter assembly.

Doors: Hold-downs on doors should only be hand tightened. Excessive pressure can distort the door panel itself resulting in leakage.

Auxiliary Equipment: All auxiliary equipment must be installed according to manufacturer's specifications and interlocked with the entire system as needed. Direction of rotation of each items should be checked prior to start up to entire system.

START UP INSTRUCTIONS

Check air pressure available, verify 90 - 100 PSIG.

Apply current to timer and make sure the timer is cycling.

Allow unit to run under normal conveying conditions for at least 48 hours, after initial installation of bags. This will allow bags to reach their maximum operating efficiency. During initial start up there may be some minor product carry over until the bags reach maximum operating efficiency.

After 48 hours inspect the bags, bag clamps and note conveying conditions. If the product is caked on the bags or being carried through the bags or conveying rates are low, see trouble shooting section. The bags should be inspected monthly and replaced if holes or wearing are observed.

TROUBLE SHOOTING

1.) Low conveying rates due to excessive high pressure on pressure conveying systems or high vacuum on vacuum conveying systems.

   A.) Check air pressure in header.
   B.) Check timer to see if it is functioning properly. Decrease "off" time to a minimum of 3 seconds and repeat instructions described under the "Start up Instructions".
   C.) Check solenoid valves to see if they are operating properly.
   D.) Check for loose wiring.

E.) Check for moisture or oil in air lines. Check to see if upper part of filter bags are damp or caked up. Install "after cooler" following the compressor and automatic moisture drains on receiver, and provide moisture traps or dessicant type dryer at collector if moisture is present.

F.) Check dew point of dust laden air. If unit is at or below dew point it may be necessary to pre-heat collector with hot, dry gas before start-up and/or to insulate collector. If heavy moisture condenses on the bags at shut-down then the collector must be purged with hot, dry gas before final shut-down.

G.) Check if bags are "skin" tight on cages. Bags must be free on cage for proper "flex". Bags which have been cleaned or washed may shrink and must be checked for a "loose" fit. Check hopper for overloading.

1.) Check dust discharge mechanism for proper operation and capacity. Correct if necessary.

2.) Check for material bridging across hopper or sticking to hopper. Coat hopper with Epoxy or Teflon type coating or add a sufficient size rapper or vibrator to keep hopper clear.

2.) High Product Carry Over.

A.) Allow unit to run at least 48 to 96 hours after initial installation of bags before performing checks. This running time allows bags to reach their operating efficiency and dusting may stop.

B.) Check filter bags for holes and wearing, replace if necessary.

C.) Check bag installation.

3.) Poor Bag Life.

A.) Check for moisture and dew point in unit. High moisture will cause certain filter materials to shrink and shorten bag life.

B.) If localized abrasion of bags is observed an impingement baffle may be required.

C.) Check for corrosion on cages. "Rough" surfaces will cause excess bag wear. Plastic coated or 304 Stainless Steel cages are available.

If you are experiencing any difficulties not covered by the above instructions, contact your O. A. Newton Salesman.

TIMER INSTRUCTIONS

Please refer to the individual instruction sheet for timer operation.

TIMER TROUBLE SHOOTING

1.) Check for mechanical damage.
2.) Check wiring of both power and solenoid valves.
3.) If indicator light is not on, check power input.
4.) Check fuse, replace if blown.
5.) Check program jumper. Program jumper should be in #3 position for 3 solenoid units and #4 position for 4 solenoid units and so on.
6.) Refer to timer instructions for further data.

INITIAL SETTING OF TIMER

1.) Set "On" time at minimum setting of 50 milliseconds.
2.) Set "Off" time at approximately 10 seconds. Then follow standard start up instructions.

O. A. NEWTON

Pleat Plus
Cartridges

PLEAT PLUS FILTERS FOR BAGHOUSES

DESIGNED FOR 5.75" BOTTOM LOAD BAGS

TDC PLEAT PLUS CARTRIDGES OFFER:

- More efficient filtration compared with felt
- Increased media area provides lower restriction
- Reduced maintenance costs due to easier changeouts
- No cages required with pleated filters
- Longer filter life
- Improved air flow capacity
- Superior dust release
- Washability
- One piece installation (excluding clamp)

SPECIFICATIONS:

- High strength, 100% spun bond polyester media
- Continuous 200° F operating temperature
- Variable pleat height and pleat count
- Urethane or metal components
- Excellent efficiency
- Food grade construction
- Custom designs available
- Non-shedding, continuous-fiber construction
- Polyurethane top and bottom construction
- Galvanized metal inner core (304 SS or plastic optional)

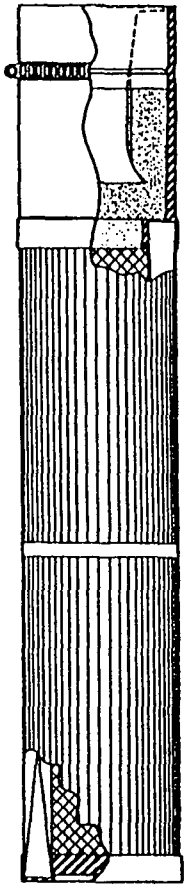

MEDIA OPTIONS:

- SB—100% spun bond polyester
- SBME—Metalized media/ground wire for static dissipation
- SBTB—Media immersed in PTFE bath to create a hydro/ oleo phobic coating (resistance to oil, water & dirt)
- SBPTFE—PTFE membrane on outer surface for ultra high efficiency, moisture resistance and ease of dust release

STANDARD SIZES* & MEDIA AREAS

Media Length	Over-All Length	30 Pleats	45 Pleats
[redacted]			
[redacted]			
36"	43.705"	15.0 ft²	22.5 ft²
[redacted]			
[redacted]			
[redacted]			

* 1" pleat height

Note: All specifications are nominal and are subject to change without notice.

U.S. Rte 13, P.O. Box 397, Bridgeville, Delaware 19933 (302) 337-8211 fax:(302) 337-3780

O. A. NEWTON

INSTALLATION OF BOTTOM LOAD PLEAT PLUS™ FILTERS

Figure 1

Figure 2

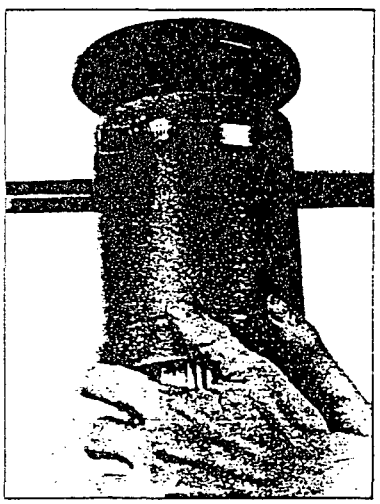

Figure 3

Figure 4

Venturi (Figure 1) or bag cup should be clean and in good repair.

Position a new clamp in the channel located near the top of the molded open end of the filter. Tighten until the clamp stays in place but is not compressing the filter top. (Figure 2)

Carefully push the open end onto the venturi, or bag cup, and slide the filter up until the internal bead snaps into the venturi, or bag cup, groove. (Figure 3)

Make sure the top is mounted evenly, all the way around. Gently pull down on the filter to assure the bead is firmly in the groove. Check to see that filters are hanging straight and are not touching another filter or sidewall.

Position the clamp toward the top of the clamp channel and tighten into place. Do not overtighten. The clamp should be tight enough to prevent the filter from turning when twisted, but not so tight that the band segments cut into the molded top. 10-14 inch pounds torque recommended. (Figure 4)

U.S. Rte 13, P.O. Box 397, Bridgeville, Delaware 19933 (302) 337-8211 fax (302) 337-3780

SEQUENCE PROGRAMMER #7929

FOR DUST COLLECTORS

SOLID STATE LOW COST

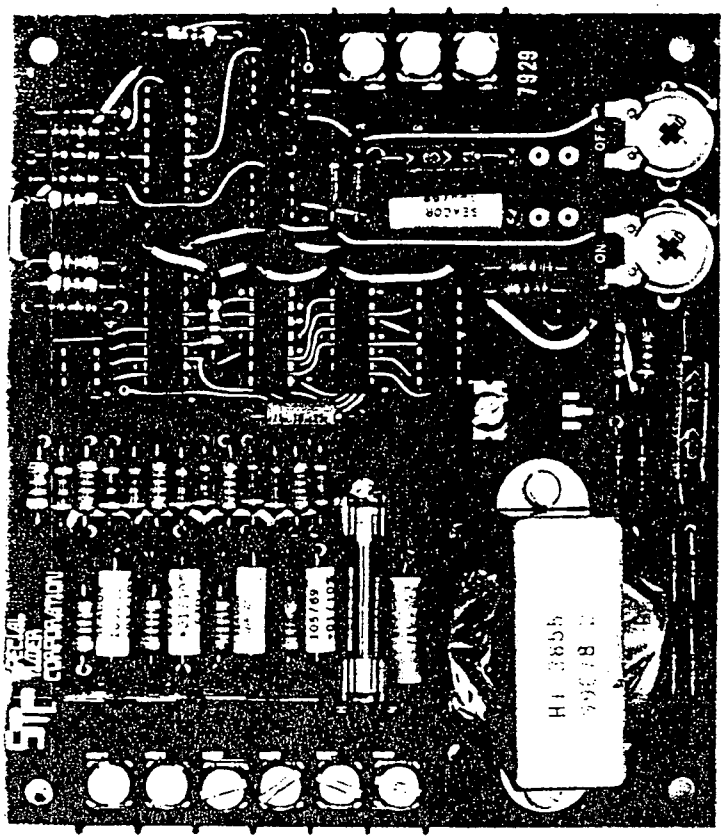

SEQUENCE:

1. No. 1 on, then No. 2 on, and so on to the last selected output, then back to No. 1, and continuing.
2. On times and off times are adjustable.
3. To extend on or off time ranges, add the proper capacitor to terms A, B & C. (+) to term B for on. (+) to term A for off and (–) to term C for both.

16VDC CAPACITOR SIZE FOR TIME RANGE

SYM	TIME RANGE	REF.
1	16 - 600 Milliseconds	.1
2	30 Milliseconds to 1.2 Seconds	.2
3	.1 - 6 Seconds	1
4	.2 - 12 Seconds	2.2
5	.3 - 20 Seconds	3.3
6	1 - 60 Seconds	10
7	2 Seconds to 2 Minutes	22
8	15 Seconds to 10 Minutes	100
9	.5 - 20 Minutes	220
10	1 - 45 Minutes	470
11	1 Minute 1.5 Hours 250	470
12	1 Minute to 8 Hours 1 M	470

RELIABLE, COMPACT, LOW COST

Here's 100% solid state reliability that features integrated circuitry and measures just 5-1/2" x 4-7/8" x 1-1/2". Available in enclosures such as moistureproof or explosionproof.

ADJUSTABLE SIGNAL INTERVALS

Signals are adjustable from 1/50 second to 8 hours. Special modifications for long timing ranges and models with complex sequences are also available. LED indication is provided for each output, and for power on indication.

STOP FUNCTION (Pressure Switch Sensing)

The sequence may be stopped at any position, on or off, restarting at that position for set time.

SELECTING PROPER PROGRAM

The gold jumper on the component side of the Control is for selecting the number of outputs. It is inserted in a small socket. To reduce the number of output positions, remove this jumper by pulling lightly until it retracts from the socket. Reinsert into the proper socket position (each hole closer to the fixed end reduces the output quantity by one) corresponding to the number of outputs desired.

INSTALLATION

1. Mount the control or enclosure in any convenient location. Direction of the control does not effect its performance.
2. Connect 115 V 50/60 Cycle supply to terminal H & N. Neutral to N, High to H.
3. Connect one wire of each load to terminals 1 thru 4 as required. The remaining wire (common) is to be connected to terminal N.
4. Output rating is 3 amps at 115 VAC, maximum.

PROGRAM UP TO 4 FUNCTIONS!

Up to 4 outputs can be provided on the Special Timer Corporation Sequence Programmer, enabling you to program any sequence of up to 4.

STC SPECIAL TIMER CORPORATION

P.O. BOX 1000 DAYTON, MINN. 55327 PHONE 612/441-4320

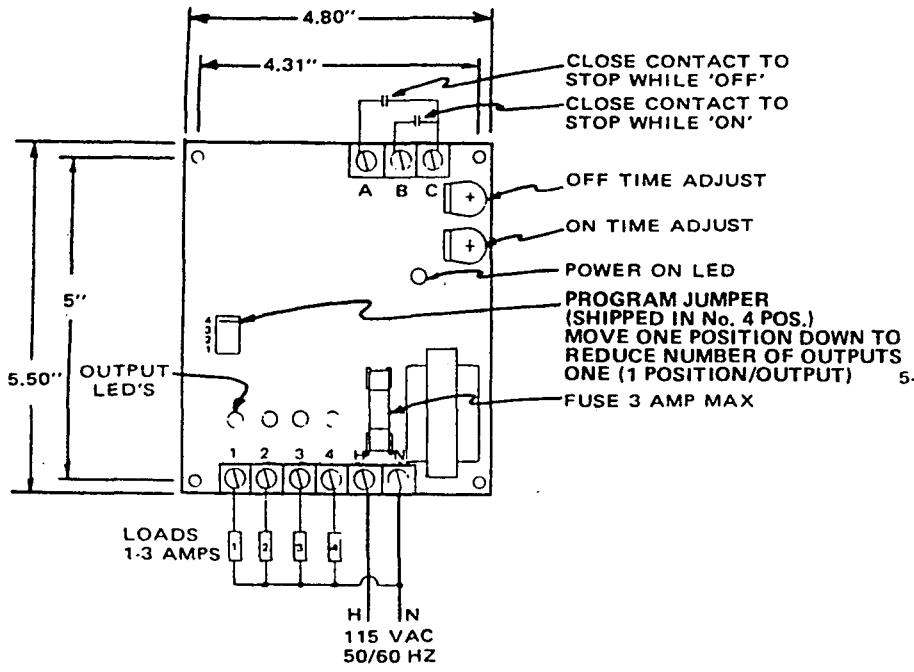

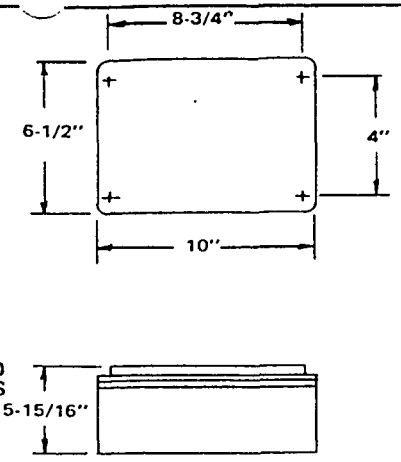

NEMA 4X FIBERGLASS

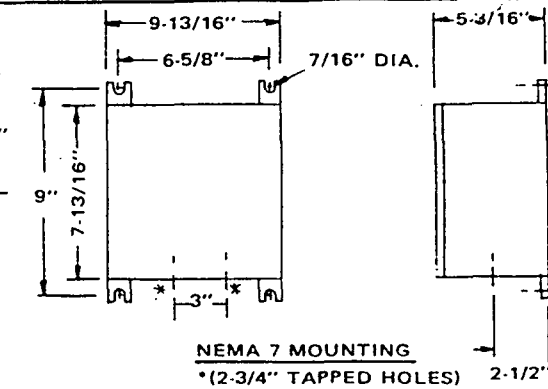

NEMA 7 MOUNTING
*(2-3/4" TAPPED HOLES)

TO ORDER/SELECT PART NUMBER 7929 - 1 - 7 - NEMA 4
SELECT FROM TABLE BELOW
- ON TIME RANGE
- OFF TIME RANGE
- ENCLOSURE IF REQUIRED

SEQUENCE:

1) No. 1 ON THEN OFF, THEN No. 2 AND SO ON TO LAST SELECTED OUTPUT THEN BACK TO No. 1 AND CONTINUING, EACH OUTPUT IDENTICAL.
2) ON TIME AND OFF TIME ARE INDEPENDENTLY ADJUSTABLE
3) FOR AVAILABLE TIME RANGES SEE TABLE AT RIGHT

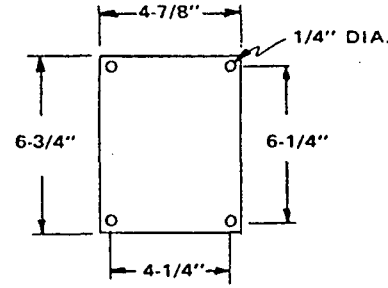

FLAT PANEL MOUNTING

NOTE: VARIATIONS OF TIME RANGES MAY BE SPECIFIED AS WELL AS LONGER TIMES. SPECIAL VOLTAGES, OR NUMBER OF OUTPUTS.

TIME RANGE MAY BE INCREASED BY ADDING CAPACITANCE FROM TERMINAL C TO TERM A OR B, C IS NEGATIVE (–) LEAD OF CAPACITOR.

16VDC CAPACITOR SIZE FOR TIME RANGE

SYM	TIME RANGE	REF.
1	16 - 600 Milliseconds	.1
2	30 Milliseconds to 1.2 Seconds	.2
3	.1 - 6 Seconds	1
4	.2 - 12 Seconds	2.2
5	.3 - 20 Seconds	3.3
6	1 - 60 Seconds	10
7	2 Seconds to 2 Minutes	22
8	15 Seconds to 10 Minutes	100
9	.5 - 20 Minutes	220
10	1 - 45 Minutes	470
11	1 Minute 1.5 Hours 250	470
12	1 Minute to 8 Hours 1 M	470

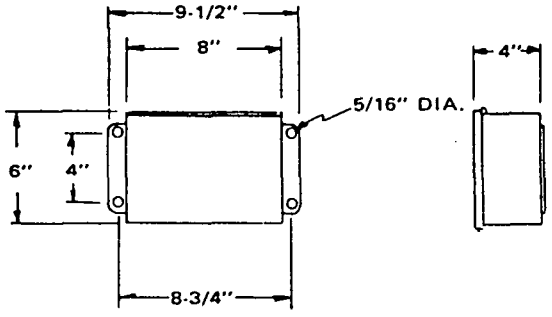

NEMA 4 & 12

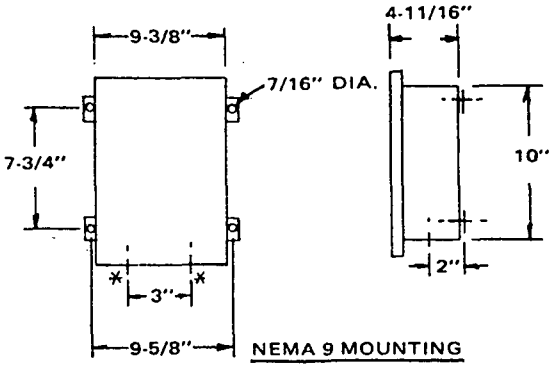

NEMA 9 MOUNTING
*(2-3/4" TAPPED HOLES)

STC SPECIAL TIMER CORPORATION

SCALE: 4	APPROVED BY: 4/24/80	DRAWN BY:
DATE: 4/16/80		DETAILED

1 TO 4 OUTPUT SEQUENCER

FIELD CONNECTION DIAGRAM — DRAWING NUMBER 792909

SEQUENCE PROGRAMMER #7937

FOR DUST COLLECTORS

SOLID STATE LOW COST

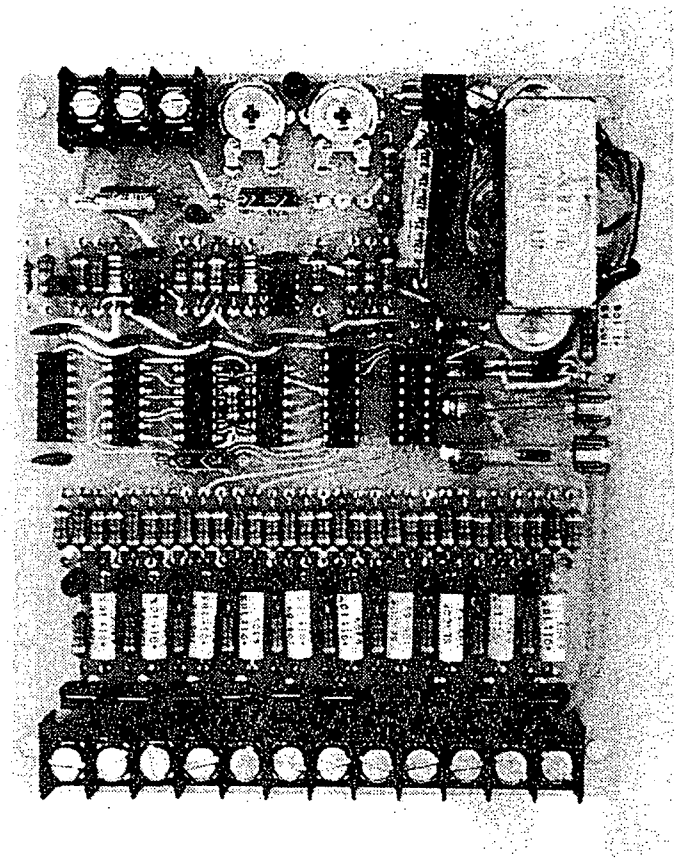

SEQUENCE:

1. No. 1 on, then No. 2 on, and so on to the last selected output, then back to No. 1, and continuing.
2. On times and off times are adjustable.
3. To extend on or off time ranges, add the proper capacitor to terms A, B & C. (+) to term B for on. (+) to term A for off and (—) to term C for both.

16VDC CAPACITOR SIZE FOR TIME RANGE

SYM	TIME RANGE	REF.
1	16 - 600 Milliseconds	.1
2	30 Milliseconds to 1.2 Seconds	.2
3	.1 - 6 Seconds	1
4	.2 - 12 Seconds	2.2
5	.3 - 20 Seconds	3.3
6	1 - 60 Seconds	10
7	2 Seconds to 2 Minutes	22
8	15 Seconds to 10 Minutes	100
9	.5 - 20 Minutes	220
10	1 - 45 Minutes	470
11	1 Minute 1.5 Hours 250	470
12	1 Minute to 8 Hours 1 M	470

RELIABLE, COMPACT, LOW COST

Here's 100% solid state reliability that features integrated circuitry and measures just 6-1/4" x 5-3/8" x 1-1/2". Ask about enclosures such as moistureproof or explosionproof.

ADJUSTABLE SIGNAL INTERVALS

Signals are adjustable from 1/50 second to 120 seconds, signals (intervals) can range to over eight hours. Special modifications for long timing ranges and models with complex sequences are also available. LED indication is provided for each output, and for power on indication.

STOP FUNCTION (Pressure Switch Sensing)

The sequence may be stopped at any position, on or off, restarting at that position for set time.

SELECTING PROPER PROGRAM

The gold jumper on the component side of the Control is for selecting the number of outputs. It is inserted in a small socket. To reduce the number of output positions, remove this jumper by pulling lightly until it retracts from the socket. Reinsert into the proper socket position (each hole closer to the fixed end reduces the output quantity by one) corresponding to the number of outputs desired.

INSTALLATION

1. Mount the control or enclosure in any convenient location. Direction of the control does not effect its performance.
2. Connect 115 V 50/60 Cycle supply to terminal 11 & 12. Neutral to 12, High to 11.
3. Connect one wire of each load to terminals 1 thru 10 as required. The remaining wire (common) is to be connected to terminal 12.
4. Output rating is 3 amps at 115 VAC.

PROGRAM UP TO 10 FUNCTIONS!

Up to 10 outputs can be provided on the Special Timer Corporation Sequence Programmer, enabling you to program any sequence of up to 10.

STC SPECIAL TIMER CORPORATION

P.O. BOX 1000 DAYTON, MINN. 55327 PHONE 612/441-4320

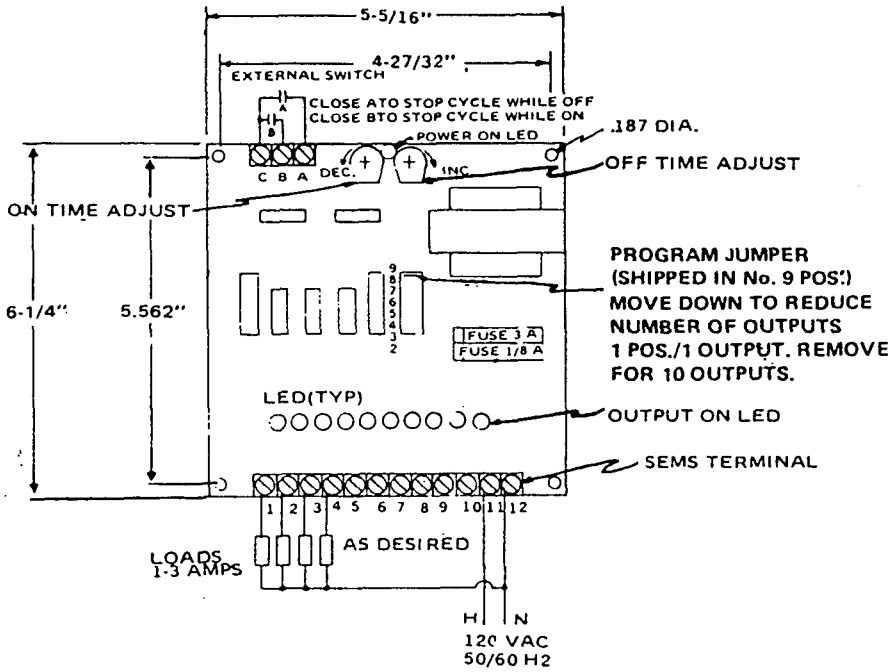

SEQUENCE:

1) No. 1 ON THEN No. 2 AND SO ON TO LAST SELECTED OUTPUT THEN BACK TO No. 1 AND CONTINUING, EACH OUTPUT IDENTICAL
2) ON TIME AND OFF TIME ARE INDEPENDENTLY ADJUSTABLE
3) FOR AVAILABLE TIMES SEE TABLE AT RIGHT AND DWG. 770409

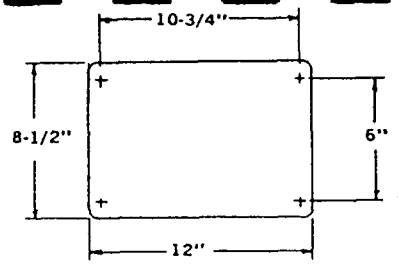

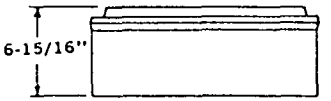

NEMA 4X MOUNTING
FIBERGLASS

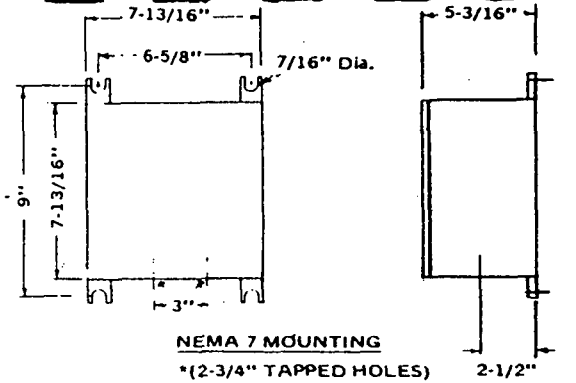

NEMA 7 MOUNTING
*(2-3/4" TAPPED HOLES)

TO ORDER SPECIFY—PART NUMBER -7937-1 - 6 NEMA 12
SELECT FROM TABLE BELOW
—ON TIME RANGE
—OFF TIME RANGE
—ENCLOSURE (If Required)

NOTE: VARIATIONS OF TIME RANGES MAY BE SPECIFIED AS WELL AS LONGER TIMES. SPECIAL VOLTAGES, OR NUMBER OF OUTPUTS.

TIME RANGE MAY BE INCREASED BY ADDING CAPACITANCE FROM TERMINAL C TO TERM A OR B, C IS NEGATIVE (–) LEAD OF CAPACITOR.

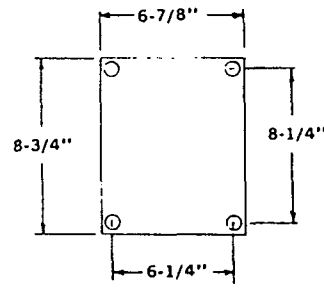

FLAT PANEL MOUNTING

16VDC CAPACITOR SIZE FOR TIME RANGE

SYM	TIME RANGE	REF.
1	16 - 600 Milliseconds	.1
2	30 Milliseconds to 1.2 Seconds	.2
3	.1 - 6 Seconds	1
4	.2 - 12 Seconds	2.2
5	.3 - 20 Seconds	[illegible]
6	1 - 60 Seconds	
7	2 Seconds to 2 Minutes	22
8	15 Seconds to 10 Minutes	100
9	.5 - 20 Minutes	220
10	1 - 45 Minutes	470
11	1 Minute 1.5 Hours 250	470
12	1 Minute to 8 Hours 1 M	470

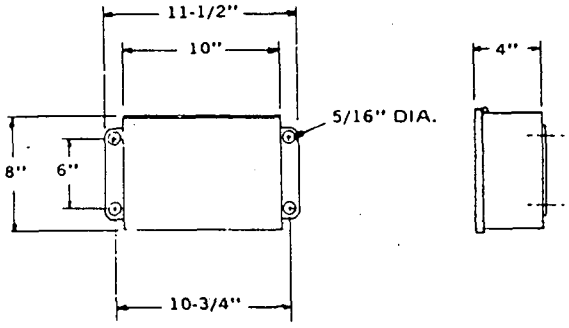

NEMA 4 & 12 M UNTING

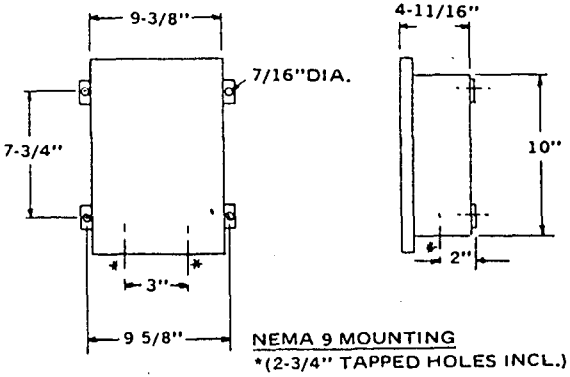

NEMA 9 MOUNTING
*(2-3/4" TAPPED HOLES INCL.)

SPECIAL TIMER CORPORATION

SEQUENCE PROGRAMMER

FIELD CONN. DIAGRAM

793709

ASCO
JOUCOMATIC
Form No. V6950

GB

GENERAL INSTALLATION AND MAINTENANCE INSTRUCTIONS

Note: These General Installation and Maintenance Instructions must be read in conjunction with the Instruction Sheet for the specific product.

INSTALLATION

ASCO/JOUCOMATIC components are intended to be used only within the technical characteristics as specified on the nameplate. Changes to the equipment are only allowed after consulting the manufacturer or its representative. Before installation depressurize the piping system and clean internally.
The equipment may be mounted in any position if not otherwise indicated on the product by means of an arrow.
The flow direction and pipe connection of valves are indicated on the body.

The pipe connections have to be in accordance with the size indicated on the nameplate and fitted accordingly.
Caution:

- Reducing the connections may cause improper operation or malfunctioning.
- For the protection of the equipment install a strainer or filter suitable for the service involved in the inlet side as close to the product as possible.
- If tape, paste, spray or a similar lubricant is used when tightening, avoid particles entering the system.
- Use proper tools and locate wrenches as close as possible to the connection point.
- To avoid damage to the equipment, DO NOT OVERTIGHTEN pipe connections.
- Do not use valve or solenoid as a lever.
- The pipe connections should not apply any force, torque or strain to the product.

ELECTRICAL CONNECTION

In case of electrical connections, they are only to be made by trained personnel and have to be in accordance with the local regulations and standards.
Caution:

- Turn off electrical power supply and de-energize the electrical circuit and voltage carrying parts before starting work.
- All electrical screw terminals must be properly tightened according to the standards before putting into service.
- Dependent upon the voltage electrical components must be provided with an earth connection and satisfy local regulations and standards

The equipment can have one of the following electrical terminals:

- Spade plug connections according to ISO-4400 or 3 x DIN-46244 (when correctly installed this connection provides IP-65 protection).
- Embedded screw terminals in metal enclosure with "Pg" cable gland.
- Spade terminals (AMP type).
- Flying leads or cables.

PUTTING INTO SERVICE

Before pressurizing the system, first carry-out an electrical test. In case of solenoid valves, energize the coil a few times and notice a metal click signifying the solenoid operation.

SERVICE

Most of the solenoid valves are equipped with coils for continuous duty service. To prevent the possibility of personal or property damage do not touch the solenoid which can become hot under normal operation conditions.

SOUND EMISSION

The emission of sound depends on the application, medium and nature of the equipment used. The exact determination of the sound level can only be carried out by the user having the valve installed in his system.

MAINTENANCE

Maintenance of ASCO/JOUCOMATIC products is dependent on service conditions. Periodic cleaning is recommended, the timing of which will depend on the media and service conditions. During servicing, components should be examined for excessive wear. A complete set of internal parts is available as a spare parts or rebuild kit. If a problem occurs during installation/maintenance or in case of doubt please contact ASCO/JOUCOMATIC or authorised representatives.

A separate Declaration of Incorporation relating to EEC-Directive 89/392/EEC Annex II B is available on request. Please provide product identification number and serial numbers of products concerned.
This product complies with the essential requirements of the EMC-Directive 89/336/EEC and amendments. A separate Declaration of Conformity is available on request. Please provide product identification number and serial numbers of the products concerned.

FR

INSTRUCTIONS GÉNÉRALES D'INSTALLATION ET D'ENTRETIEN

Nota : Ces instructions générales d'installation et d'entretien complètent la notice spécifique du produit.

MONTAGE

Les composants ASCO/JOUCOMATIC sont conçus pour les domaines de fonctionnement indiqués sur la plaque signalétique ou la documentation. Aucune modification ne peut être réalisée sur le matériel sans l'accord préalable du fabricant ou de son représentant. Avant de procéder au montage, dépressuriser les canalisations et effectuer un nettoyage interne.
A moins qu'une flèche ou la notice n'indique un sens de montage spécifique de la tête magnétique, le produit peut être monté dans n'importe quelle position.
Le sens de circulation du fluide est indiqué par repères sur le corps et dans la documentation.

La dimension des tuyauteries doit correspondre au raccordement indiqué sur le corps, l'étiquette ou la notice.
Attention :

- Une restriction des tuyauteries peut entraîner des dysfonctionnements.
- Afin de protéger le matériel, installer une crépine ou un filtre adéquat en amont, aussi près que possible du produit.
- En cas d'utilisation de ruban, pâte, aérosol ou autre lubrifiant lors du serrage, veiller à ce qu'aucun corps étranger ne pénètre dans le circuit.
- Utiliser un outillage approprié et placer les clés aussi près que possible du point de raccordement.
- Afin d'éviter toute détérioration, NE PAS TROP SERRER les raccords des tuyauteries.
- Ne pas se servir de la vanne ou de la tête magnétique comme d'un levier.
- Les tubes de raccordement ne devront exercer aucun effort, couple ou contrainte sur le produit.

RACCORDEMENT ÉLECTRIQUE

Le raccordement électrique doit être réalisé par un personnel qualifié et selon les normes et règlements locaux.
Attention :

- Avant toute intervention, couper l'alimentation électrique pour mettre hors tension les composants.
- Toutes les bornes à vis doivent être serrées correctement avant la mise en service.
- Selon la tension, les composants électriques doivent être mis à la terre conformément aux normes et règlements locaux.

Selon les cas, le raccordement électrique s'effectue par :

- Connecteur débrochable ISO4400 ou 3 x DIN46244 avec degré de protection IP65 lorsque le raccordement est correctement effectué.
- Bornes à vis solidaires du bobinage, sous boîtier métallique avec presse-étoupe "Pg - -".
- Cosses (type AMP).
- Fils ou câbles solidaires de la bobine.

MISE EN SERVICE

Avant de mettre le circuit sous pression, effectuer un essai électrique. Dans le cas d'une électrovanne, mettre la bobine sous tension plusieurs fois et écouter le "clic" métallique qui signale le fonctionnement de la tête magnétique.

FONCTIONNEMENT

La plupart des électrovannes comportent des bobinages prévus pour mise sous tension permanente. Pour éviter toute brûlure, ne pas toucher la tête magnétique qui, en fonctionnement normal et en permanence sous tension, peut atteindre une température élevée.

BRUIT DE FONCTIONNEMENT

Le bruit de fonctionnement varie selon l'utilisation, le fluide et le type de matériel employé. L'utilisateur ne pourra déterminer avec précision le niveau sonore émis qu'après avoir monté le composant sur l'installation.

ENTRETIEN

L'entretien nécessaire aux produits ASCO/JOUCOMATIC varie avec leurs conditions d'utilisation. Il est souhaitable de procéder à un nettoyage périodique dont l'intervalle varie suivant la nature du fluide, les conditions de fonctionnement et le milieu ambiant. Lors de l'intervention, les composants doivent être examinés pour détecter toute usure excessive. Un ensemble de pièces internes est proposé en pièces de rechange pour procéder à la réfection. En cas de problème lors du montage/entretien ou en cas de doute, veuillez contacter ASCO/JOUCOMATIC ou ses représentants officiels.

Conformément à la directive CEE 89/392/CEE Annexe II B, une Déclaration d'Incorporation peut être fournie sur demande. Veuillez nous indiquer le numéro d'accusé de réception (AR) et les références ou codes des produits concernés.
Ce produit est conforme aux exigences essentielles de la Directive 89/336/CEE sur la Compatibilité Electromagnétique, et amendements. Une déclaration de conformité peut être fournie sur simple demande. Veuillez nous indiquer le numéro d'accusé de réception (AR) ainsi que les numéros de série des produits concernés.

DE

ALLGEMEINE BETRIEBSANLEITUNG

ACHTUNG:Diese Allgemeine Betriebsanleitung gilt in Zusammenhang mit der jeweiligen Betriebsanleitung für die speziellen Produkte.

EINBAU

Die ASCO/JOUCOMATIC-Komponenten dürfen nur innerhalb der auf den Typenschildern angegebenen Daten eingesetzt werden.Veränderungen an den Produkten sind nur nach Rücksprache mit ASCO/JOUCOMATIC zulässig.
Vor dem Einbau der Ventile muß das Rohrleitungssystem drucklos geschaltet und innen gereinigt werden.
Die Einbaulage der Produkte ist generell beliebig. **Ausnahme:** Die mit einem Pfeil gekennzeichneten Produkte müssen entsprechend der Pfeilrichtung montiert werden.
Die Durchflußrichtung und der Eingang von Ventilen sind gekennzeichnet.

Die Rohranschlüsse sollten entsprechend den Größenangaben auf den Typenschildern mit handelsüblichen Verschraubungen durchgeführt werden. **Dabei ist folgendes zu beachten:**

- Eine Reduzierung der Anschlüsse kann zu Leistungs- und Funktionsminderungen führen.
- Zum Schutz der Ventile sollten Schmutzfänger oder Filter so dicht wie möglich in den Ventileingang integriert werden.
- Bei Abdichtung am Gewinde ist darauf zu achten, daß kein Dichtungsmaterial in die Rohrleitung oder das Ventil gelangt.
- Zur Montage darf nur geeignetes Werkzeug verwendet werden.
- Konische Verschraubungen sind sorgfältig anzuziehen. Es ist darauf zu achten, daß beim Anziehen das Gehäuse nicht beschädigt wird.
- Spule und Führungsrohr von Ventilen dürfen nicht als Gegenhalter benutzt werden.
- Die Rohrleitungsanschlüsse sollen fluchten und dürfen keine Spannungen auf das Ventil übertragen.

ELEKTRISCHER ANSCHLUß

Der elektrische Anschluß ist von Fachpersonal entsprechend den geltenden VDE- und CEE-Richtlinien auszuführen. **Es ist besonders auf folgendes zu achten:**

- Vor Beginn der Arbeiten ist sicherzustellen, daß alle elektrischen Leitungen und Netzteile spannungslos geschaltet sind.
- Alle Anschlußklemmen sind nach Beendigung der Arbeiten vorschriftsmäßig entsprechend den geltenden Regeln anzuziehen.
- Je nach Spannungsbereich muß das Ventil nach den geltenden Regeln einen Schutzleiteranschluß erhalten.

Der Magnetantrieb kann je nach Bauart folgende Anschlüsse haben:

- Anschluß für Gerätesteckdose nach DIN 43650 Form A/ISO 4400 oder 3x DIN 46244 (durch ordnungsgemäße Montage der Gerätesteckdose wird Schutzklasse IP 65 erreicht).
- Anschlüsse innerhalb eines Blechgehäuses mittels Schraubklemmen. Kabeleinführung ins Gehäuse mit PG-Verschraubung.
- Offene Spulen mit Flachsteckern (AMP-Fahnen) oder mit eingegossenen Kabelenden.

INBETRIEBNAHME

Vor Druckbeaufschlagung des Produktes sollte eine elektrische Funktionsprüfung erfolgen:
Bei Ventilen Spannung an der Magnetspule mehrmals ein- und ausschalten. **Es muß ein Klicken zu hören sein.**

BETRIEB

Die meisten Ventile sind mit Spulen für Dauerbetrieb ausgerüstet. Zur Vermeidung von Personen- und Sachschäden sollte jede Berührung mit dem Ventil vermieden werden, da die Magnetspule bei längerem Betrieb sehr heiß werden kann.

GERÄUSCHEMISSION

Diese hängt sehr stark vom Anwendungsfall, den Betriebsdaten und dem Medium, mit denen das Produkt beaufschlagt wird, ab. Eine Aussage über die Geräuschemission des Produktes muß deshalb von demjenigen getroffen werden, der das Produkt innerhalb einer Maschine in Betrieb nimmt.

WARTUNG

Die Wartung hängt von den Einsatzbedingungen ab. In entsprechenden Zeitabständen muß das Produkt geöffnet und gereinigt werden. Für die Überholung der ASCO/JOUCOMATIC-Produkte können Ersatzteilsätze geliefert werden. Treten Schwierigkeiten bei Einbau, Betrieb oder Wartung auf, sowie bei Unklarheiten, ist mit ASCO/JOUCOMATIC Rücksprache zu halten.

(ASCO/JOUCOMATIC Produkte sind entsprechend der EG-Richtlinie 89/392/EWG gefertigt.

Eine separate Herstellererklärung im Sinne der Richtlinie 89/392/EWG Anhang IIB ist auf Anfrage erhältlich. Geben Sie bitte für die Produkte die Nummer der Auftragsbestätigung und die Seriennummer an.
Das Produkt erfüllt die wesentlichen Anforderungen der EMC-Richtlinie 89/336/EWG und der entsprechenden Änderungen. Eine separate Konformitätserklärung ist auf Anfrage erhältlich. Bitte geben Sie die Auftragsbestätigungsnummer und die Seriennummern der betreffenden Produkte an.

AUTOMATIC SWITCH CO.
50-60 Hanover Road
Florham Park, New Jersey 07932
Tel. (201) 966-2000
Fax (201) 966-2628

AUTOMATIC SWITCH CO.
1561 Columbia Highway
Aiken, South Carolina 29801
Tel. (803) 641-9200
Fax (803) 641-9290

ANGAR SCIENTIFIC
54 Horsehill Road
Cedar Knolls, New Jersey 07927
Tel. (201) 538-9700
Fax (201) 538-5937

© Automatic Switch Co. All Rights Reserved.

MCMXCV Printed in U.S.A.

ES CE

INSTRUCCIONES GENERALES DE INSTALACION Y MANTENIMIENTO

Nota: Estas instrucciones Generales de Instalación y Mantenimiento deben considerarse en conjunción con la Hoja de Instrucciones de cada producto.

INSTALACION

Los componentes ASCO/JOUCOMATIC sólo deben utilizarse dentro de las especificaciones técnicas que se especifican en su placa de características o catálogo. Los cambios en el equipo sólo estarán permitidos después de consultar al fabricante o a su representante. Antes de la instalación despresurice el sistema de tuberías y limpie internamente.
El equipo puede utilizarse en cualquier posición si no estuviera indicado lo contrario sobre el mismo mediante una flecha o en el catálogo.
En el cuerpo o en el catálogo se indican el sentido del fluido y la conexión de las válvulas a la tubería.

Las conexiones a la tubería deben corresponder al tamaño indicado en la placa de características la etiqueta o el catálogo y ajustarse adecuadamente.
Precaución:

- La reducción de las conexiones puede causar operaciones incorrectas o defectos de funcionamiento.
- Para la protección del equipo se debe instalar, en la parte de la entrada y tan cerca como sea posible del producto, un filtro adecuado.
- Si se utilizara cinta, pasta, spray u otros lubricantes en el ajuste, se debe evitar que entren partículas en el producto.
- Se debe utilizar las herramientas adecuadas y colocar llaves inglesas lo mas cerca posible del punto de conexión.
- Para evitar daños al equipo, NO FORZAR las conexiones a la tubería.
- No utilizar la válvula o el solenoide como palanca.
- Las conexiones a la tubería no producirán ninguna fuerza, par o tensión sobre el producto.

CONEXION ELECTRICA

Las conexiones eléctricas serán realizadas por personal cualificado y deberán adaptarse a las normas y regulaciones locales.
Precaución:

- Antes de comenzar el trabajo, desconecte el suministro de energía eléctrica y desenergice el circuito eléctrico y los elementos portadores de tensión.
- Todos los terminales eléctricos deben estar apretados adecuadamente según normas antes de su puesta en servicio.
- Según el voltaje, los componentes eléctricos deben disponer de una conexión a tierra y satisfacer las normas y regulaciones locales.

El equipo puede tener uno de los siguientes terminales eléctricos:

- Conexiones desenchufables segun ISO 4400 o 3 x DIN-46244 (cuando se instala correctamente esta conexión proporciona una protección IP-65).
- Terminales de tornillo con carcasa metálica con entrada de cable de conexión roscada "PG".
- Conector desenchufable (tipo AMP).
- Salida de cables.

PUESTA EN MARCHA

Se debe efectuar una prueba eléctrica antes de someter a presión el sistema. En el caso de las válvulas solenoides, se debe energizar varias veces la bobina y comprobar que se produce un sonido metálico que indica el funcionamiento del solenoide.

SERVICIO

La mayor parte de las válvulas solenoides se suministran con bobinas para un servicio continuo. Con el fin de evitar la posibilidad de daños personales o materiales no se debe tocar el solenoide, ya que puede haberse calentado en condiciones normales de trabajo.

EMISION DE RUIDOS

La emisión de ruidos depende de la aplicación, medio y naturaleza del equipo utilizado. Una determinación exacta del nivel de ruido sólamente se puede llevar a cabo por el usuario que disponga la válvula instalada en su sistema.

MANTENIMIENTO

El mantenimiento de los productos ASCO/JOUCOMATIC depende de las condiciones de servicio. Se recomienda una limpieza periódica, dependiendo de las condiciones del medio y del servicio. Durante el servicio, los componentes deben ser examinados por si hubieran desgastes excesivos. Se dispone de un juego completo de partes internas como recambio o kit de montaje. Si ocurriera un problema durante la instalación/mantenimiento o en caso de duda contactar con ASCO/JOUCOMATIC o representantes autorizados.

Se dispone, por separado y bajo demanda, de una Declaración de Incorporación conforme a la Directiva CEE 89/392/EEC Anexo II B. Rogamos que nos faciliten los códigos y números de acepta-ción de pedido correspondientes.
Este producto cumple con los requisitos esenciales de la Directiva EMC 89/336/CEE y sus correspondientes modificaciones. Si lo desea, podemos facilitarle una Declaración de Conformidad por separado. Rogamos faciliten el número de confirmación de pedido y los números de serie de los respectivos productos.

IT CE

ISTRUZIONI DI INSTALLAZIONE E DI MANUTENZIONE GENERALE

Nota: Queste istruzioni devono essere lette in congiunzione con il manuale specifico del prodotto.

INSTALLAZIONE

Le elettrovalvole devono essere utilizzate esclusivamente rispettando le caratteristiche tecniche specificate sulla targhetta. Variazioni sulle valvole o sui piloti sono possinili solo dopo aver consultato il costruttore o i suoi rappresentanti. Prima dell'installazione depressurizzare i tubi e pulire internamente.
Le elettrovalvole possone essere montate in tutte le posizioni. Diversamente, una freccia posta sulla valvola indica che deve essere montata in posizione verticale e diritta.
La direzione del flusso e' indicata sui corpo della valvola per mezzo di una freccia oppure con l'etichetta "IN", "1", "A", o "P".

I raccordi devono essere conformi alla misura indicata sulla targhetta apposta.
Attenzione:

- Ridurre i raccordi puo' causare operazioni sbalgliate o malfunzionamento.
- Per proteggere il componente installare,il più vicino possibile al lato ingresso, un filtro adatto al servizio.
- Se si usano nastro, pasta, spray o lubrificanti simili durante il serraggio, evitare che delle particelle entrino nel corpo della valvola.
- Usare un'attrezzatura appropriate e utilizzare le chiavi solo sul corpo della valvola.
- Per evitare danni al corpo della valvola, NON SERRARE ECCESSIVAMENTE i tubi.
- Non usare la valvola o il pilota come una leva.
- I raccordi non devono esercitare pressione, torsione o sollecitazione sull'elettrovalvola.

ALLACCIAMENTO ELETTRICO

L'allacciamento elettrico deve essere effetuato esclusivamente dal personale specializzato e deve essere conforme alle Norme locali.
Attensione:

- Prima di mettere in funzione togliere l'alimentazione elettrica, diseccitare il circuito elettrico e le parti sotto tensione.
- I morsetti elettrici devono essere correttamente avvitati, secondo le Norme, prima della messa in servizio.
- Le elettrovalvole devone essere provviste di morsetti di terra a seconda della tensione e delle Norme di sicurezza locali.

I piloti possono avere una delle seguenti caratteristiche elettrice:

- Connettore ISO-4400 o 3 x DIN-46244 (se installato correttamente e' IP-65).
- Morsetteria racchiusa in custodia metallica. Entrata cavi con pressacavi tipo "PG".
- Bobina con attacchi FASTON (tipo AMP).
- Bobine con fili o cavo.

MESSA IN FUNZIONE

Prima di dare pressione alla valvoa, eseguire un test elettrico. Eccitare la bobina diverse volte fino a notare uno scatto metallico che dimostra il funzionamento del pilota.

SERVIZIO

Molte elettrovalvole sono provviste di bobine per funzionamento continuo. Per prevenire la possibilita' di danneggiare cose o persone, non toccare il pilota.
La custodia della bobina o del pilota puo' scaldarsi anche in normali condizioni di funzionamento.

EMISSIONE SUONI

L'emissione di suoni dipende dall'applicazione e dal tipo di elettrovalvola. L'utente puo' stabilire esattamente il livello del suono solo dopo aver installato la valvola sul suo impianto.

MANUTENZIONE

Generalmente questi componenti non necessitano spesso di manutenzione. Comunque, in alcuni casi e' necessario fare attenzione a depositi o ad eccessiva usura. Questi componenti devono essere puliti periodicamente, il tempo che intercorre tra una pulizia e l'altra varia a seconda delle condizioni di funzionamento. Il ciclo di durata dei componenti dipende dalle condizioni di funzionamento. Incaso di usura e' disponibile un set completo di parti interne per per la revisione.
Se si incontrano problemi durante l'installazione e la manutenzione o se si hanno dei dubbi, consultare ASCO/JOUCOMATIC o i suoi rappresentanti.

L'utente puo'richiedere al costruttore una dichiarazione separate riguardante le Direttive EEC 89/392/EEC e 91/368/EEC (vedere allegato II B) fornendo il numero di serie e il riferimento dell'ordine relativo.
Il prsente prodotto è conforme alle esigenze essenziali della Direttiva EMC 89/336/CEE ed agli emendamenti. Una Dichiarazione di Conformità separata può essere ottenuta su richiesta. Si prega di fornire il numero della conferma dell'ordinativo ed i numeri di serie dei relativi prodotti.

NL CE

ALGEMENE INSTALLATIE- EN ONDERHOUDSINSTRUKTIES

N.B.: Deze algemene instruktles t.a.v. installatie en onderhoud moeten in acht worden genomen tezamen met de specifieke voorschriften van het produkt.

INSTALLATIE

ASCO/JOUCOMATIC produkten mogen uitsluitend toegepast worden binnen de op de naamplaat aangegeven specificaties. Wijzigingen, zowel elektrisch als mechanisch, zijn alleen toegestaan na overleg met de fabrikant of haar vertegenwoordiger. Voor het inbouwen dient het leidingssysteem drukloos gemaakt te worden en inwendig gereinigd.
De positie van de afsluiter is naar keuze te bepalen, behalve in die gevallen waarbij het tegendeel door pijlen wordt aangegeven.
De doorstroomrichting wordt bij afsluiters aangegeven op het afsluiterhuis.

De pijpaansluiting moet overeenkomstig de naamplaatgegevens plaatsvinden.
Hierbij moet men letten op:

- Een reductie van de aansluitingen kan tot prestatie- en funktiestoornis leiden.
- Ter bescherming van de interne delen wordt een filter in het leidingnet aanbevolen.
- Bij het gebruik van draadafdichtingspasta of tape mogen er geen deeltjes in het leidingwerk geraken.
- Men dient uitsluitend geschikt gereedschap voor de montage te gebruiken.
- Bij konische/tapse koppelingen moet met een zodanig koppel worden gewerkt dat het produkt niet wordt beschadigd.
- Het produkt, de behuizing of de spoel mag niet als hefboom worden gebruikt.
- De pijpaansluitingen mogen geen krachten of momenten op het produkt overdragen.

ELEKTRISCHE AANSLUITING

In geval van elektrische aansluiting dient dit door vakkundig personeel te worden uitgevoerd volgens de door de plaatselijke overheid bepaalde richtlijnen.
Men dient in het bijzonder te letten op:

- Voordat men aan het werk begint moeten alle spanningsvoerende delen spanningsloos worden gemaakt.
- Alle aansluitklemmen moeten na het beëindigen van het werk volgens de juiste normen worden aangedraaid.
- Al naar gelang het spanningsbereik, moet het produkt volgens de geldende normen van een aarding worden voorzien.

Het produkt kan de volgende aansluitingen hebben:

- Stekeraansluiting volgens ISO-4400 of 3x DIN-46244 (bij juiste montage wordt de dichtheidsklasse IP-65 verkregen).
- Aansluiting binnen in het metalen huis d.m.v. schroefaansluiting. De kabeldoorvoer heeft een "PG" aansluiting.
- Spoelen met platte steker (AMP type).
- Losse of aangegoten kabels

IN GEBRUIK STELLEN

Voordat de druk aangesloten wordt dient een elektrische test te worden uitgevoerd. Ingeval van magneetafsluiters, legt men meerdere malen spanning op de spoel aan waarbij een duidelijk "klikken" hoorbaar moet zijn bij juist funktioneren.

GEBRUIK

De meeste magneetafsluiters zijn uitgevoerd met spoelen voor continu gebruik. Omdat persoonlijke of zakelijke schade kan ontstaan bij aanraking dient men dit te vermijden, daar bij langdurige inschakeling de spoel of het spoelhuis heet kan worden.

GELUIDSEMISSIE

Dit hangt sterk af van de toepassing en het gebruikte medium. De bepaling van het geluidsniveau kan pas uitgevoerd worden nadat het ventiel is ingebouwd.

ONDERHOUD

Het onderhoud aan de afsluiters is afhankelijk van de bedrijfsomstandigheden.
In bepaalde gevallen moet men bedacht zijn op media welke sterke vervuiling binnen in het produkt kunnen veroorzaken.
Men dient dan regelmatig inspecties uit te voeren door de afsluiter te openen en te reinigen. Indien ongewone slijtage optreedt dan zijn reserve onderdelensets beschikbaar om een inwendige revisie uit te voeren.
Ingeval problemen of onduidelijkheden tijdens montage, gebruik of onderhoud optreden dan dient men zich tot ASCO of haar vertegenwoordiger te wenden.

Een aparte fabrikanten verklaring van inbouw, in de zin van EU-richtlijn 89/392/EEG aanhangsel IIB kan door de afnemer na opgave van orderbevestigingsnummer en serienummer verkregen worden.
Dit produkt voldoet aan de fundamentele voorschriften van EMC-richtlijn 89/336/EEG en de bijbehorende wijzigingen. Een afzonderlijke verklaring van overeenstemming is op verzoek verkrijgbaar. Vermeld a.u.b. het nummer van de opdrachtbevestiging en de serienummers van de betreffende produkten.

ASCO PNEUMATIC CONTROLS
460 Greenway Industrial Drive
Suite J
Fort Mill, South Carolina 29715
Tel. (803) 548-1300 Fax (803) 548-1440

ASCOMATICA S.A. de C.V.
Bosques de Duraznos No. 65-1003A
Fraccionamiento Bosques de las Lomas
Delegacion Miguel Hildago
Mexico, D.F. CP11700
Tel. (52) 5-596-77-41 Fax (52) 5-596-77-19

ASCOLECTRIC LTD.
PO. Box 160 (Airport Road)
Brantford, Ontario N3T 5M8
Tel. (519) 758-2700
Fax (519) 758-5540

INSTALLATION AND MAINTENANCE INSTRUCTIONS

REMOTE PILOT OPERATED 2-WAY VALVES

BULLETIN **8353**

Kit No. 96-875

Form No. V-5162 R5

DESCRIPTION

Bulletin 8353 is a 2-way diaphragm type air valve designed for remote pilot operation. Valves have an angle type aluminum body with a 1/8 N.P.T. connection in the valve bonnet for connection to the ASCO remote pilot valve. Valves are designed for multi-unit installations with separately mounted ASCO pilot valves.

OPERATION

When remote pilot valve opens, pressure above the diaphragm is released allowing main line pressure to act against the underside of the diaphragm, opening the main valve orifice. When pilot valve closes, main line pressure bleeds to the top of the diaphragm and closes the main orifice.

INSTALLATION

Check valve bonnet for correct catalog number, pressure and service.

POSITIONING

Valve may be mounted in any position.

PIPING/TUBING

Connect piping to valve according to markings on valve body. Apply pipe compound sparingly to male pipe threads only; if applied to valve threads, it may enter the valve and cause operational difficulty. Pipe strain should be avoided by proper support and alignment of piping. When tightening pipe, do not use valve as a lever. Wrenches applied to valve body or piping are to be located as close as possible to connection point. The remote ASCO pilot valve should be mounted as close as possible to the main valve. For correct ASCO pilot valve, consult factory. For proper operation of valve, a specific pilot valve must be utilized. Connecting tubing lengths of ten feet or less have little effect on the pulse response. Installations with over ten feet of tubing must be tested under actual operating conditions. Tubing with 1/4 O.D. is recommended for all installations.

CAUTION: To avoid damage to the valve body, DO NOT OVER-TIGHTEN PIPE CONNECTIONS. If teflon tape, paste, spray or similar lubricant is used, use extra care due to reduced friction.

IMPORTANT: For the protection of the valve, install a strainer or filter suitable for the service involved in the inlet side as close to the valve as possible. Periodic cleaning is required, depending on the service conditions. See Bulletins 8600, 8601 and 8602 for strainers.

MAINTENANCE

WARNING: Depressurize valve and bleed air from header before making repairs. It is necessary only to remove the tubing from the remote pilot valve.

CLEANING

A periodic cleaning of all valves is desirable. The time between cleaning will vary, depending upon media and service conditions. In general, sluggish valve operation or excessive leakage or noise will indicate that cleaning is required.

PREVENTIVE MAINTENANCE

1. Keep the medium flowing through the valve as free from dirt and foreign material as possible.
2. While in service, operate valve at least once a month to insure proper opening and closing.
3. Periodic inspection (depending on media and service conditions) of internal valve parts for damage or excessive wear is recommended. Thoroughly clean all parts. Replace any parts that are worn or damaged.

IMPROPER OPERATION

1. Incorrect Pressure: Check valve pressure. Pressure to valve must be within 5-125 psi.
2. Excessive Leakage: Disassemble valve and clean all parts. Replace parts that are worn or damaged with a complete Spare Parts Kit for best results.
3. Failure to Open or Close:
   A. If diaphragm valve stays open, bleed hole may be clogged. If diaphragm valve stays closed, diaphragm may be torn. Disassemble valve and clean or replace diaphragm assembly.
   B. Failure of the remote pilot solenoid valve can also cause the diaphragm valve to stay closed or open. Inspect remote pilot solenoid valve for proper opening and closing.

VALVE DISASSEMBLY AND REASSEMBLY (Refer to Figures 1 & 2)

Depressurize valve and bleed air from headers before making repairs. Remove tubing connection from remote pilot valve. Proceed in the following manner:

1. Remove bonnet screws, valve bonnet, diaphragm spring and diaphragm assembly. If the valve you are disassembling contains a square cut gasket or a step spacer as shown in the sectioned view, Figure 2, the square cut gasket or step spacer need not be replaced unless damaged. If a replacement is required, order by the numbers indicated in Figure 2.
2. Diaphragm assembly is now accessible for cleaning or replacement. Replace diaphragm assembly if worn or damaged.
3. Reassemble in reverse order of disassembly paying careful attention to exploded view provided for identification and placement of parts.
4. Replace diaphragm assembly, (for ease of assembly, the tab may be located in any position) diaphragm spring, valve bonnet and bonnet screws. Torque bonnet screws in a crisscross manner to 10 - 11 foot-pounds.
5. Replace tubing connection from remote pilot valve.
6. After maintenance, operate the valve a few times to be sure of proper opening and closing.

SPARE PARTS KITS

Spare Parts Kits are available for ASCO valves.
Parts marked with an asterisk (*) are supplied in Spare Parts Kit.

ORDERING INFORMATION FOR SPARE PARTS KITS

When Ordering Spare Parts Kits,
Specify Valve Catalog Number and Serial Number.
Order Kit No. 96-875

For Square Cut Gasket, Order
Part No. 88-224-228A

For Step Spacer, Order
Part No. 93-834-1

Form No. V-5162R5 PRINTED IN U.S.A. 1977 Automatic Switch Co.

ASCO Valves
FLORHAM PARK, NEW JERSEY 07932

© Automatic Switch Co. 1977, ALL RIGHTS RESERVED

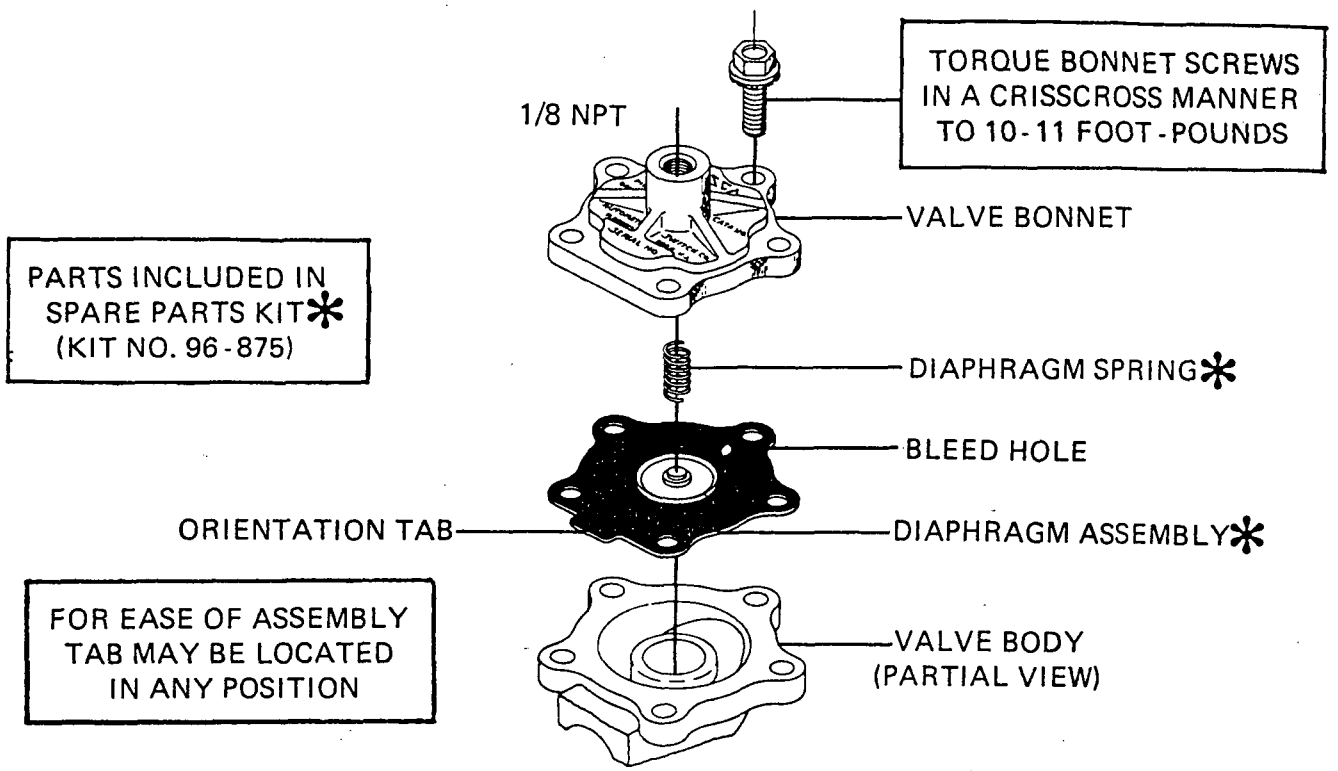

Figure 1. Bulletin 8353

IMPORTANT

THE SQUARE CUT GASKET AND STEP SPACER SHOWN BELOW ARE USED IN OLD STYLE VALVES ONLY. THEY ARE NOT SUPPLIED IN SPARE PARTS KITS, BUT IF REQUIRED, THEY MAY BE ORDERED INDIVIDUALLY BY PART NUMBER.

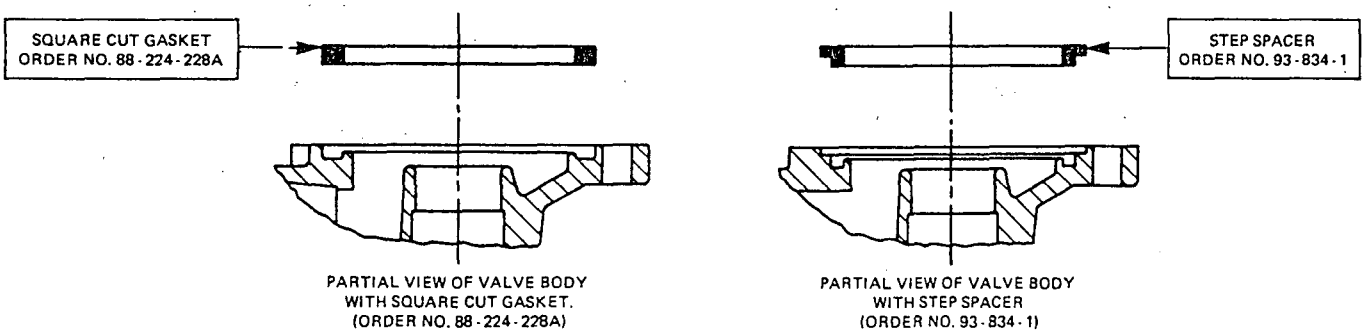

Figure 2. Bulletin 8353
Partial Views Showing Square Cut Gasket and Step Spacer used in Older Style Valves.

ASCO Valves
Automatic Switch Co. FLORHAM PARK, NEW JERSEY 07932 Form No. V-5162R5 PRINTED IN U.S.A. 1977
© Automatic Switch Co. 1977, ALL RIGHTS RESERVED

Installation & Maintenance Instructions

2-WAY DIRECT-ACTING SOLENOID VALVES
NORMALLY OPEN OR NORMALLY CLOSED OPERATION
BRASS OR STAINLESS STEEL CONSTRUCTION – 1/8", 1/4", OR 3/8" NPT

SERIES
8262
8263

Form No.V5256R8

IMPORTANT: See separate solenoid installation and maintenance instructions for information on: Wiring, Solenoid Temperature, Causes of Improper Operation, and Coil or Solenoid Replacement.

DESCRIPTION

Series 8262 and 8263 valves are 2-way direct-acting general service solenoid valves. Valves bodies are of rugged brass or stainless steel. Series 8262 or 8263 valves may be provided with a general purpose or explosionproof solenoid enclosure. Series 8262 and 8263 valves with suffix "P" in the catalog number are designed for dry inert gas and non-lubricated air service.

OPERATION

Normally Open: Valve is open when solenoid is de-energized; closed when is energized.

Normally Closed: Valve is closed when solenoid is de-energized: open when energized.

IMPORTANT: No minimum operating pressure required.

Manual Operation

Manual operator allows manual operation when desired or during an electrical power outage. Depending upon basic valve construction, three types of manual operators are available:

Push Type Manual Operator

To engage push type manual operator, push stem at base of valve body upward as far as possible. Valve will now be in the same position as when the solenoid is energized. To disengage manual operator, release stem. Manual operator will return to original position.

Screw Type Manual Operator

To engage screw type manual operator, rotate stem at base of the valve body clockwise until it hits a stop. Valve will now be in the same position as when the solenoid is energized. To disengage, rotate stem counterclockwise until it hits a stop.

⚠ **CAUTION: For valve to operate electrically, manual operator stem must be fully rotated counterclockwise.**

Stem/Lever Type Manual Operator

To engage manual operator, turn stem/lever clockwise until it hits a stop. Valve will now be in the same position as when the solenoid is energized. To disengage manual operator, turn stem/lever counterclockwise until it hits a stop.

⚠ **CAUTION: For valve to operate electrically, manual operator stem/lever must be fully rotated counterclockwise.**

Flow Metering Devices

Valves with suffix "M" in catalog number are provided with a metering device for flow control. Turn stem to right to reduce flow; left to increase flow.

INSTALLATION

Check nameplate for correct catalog number, pressure, voltage, frequency, and service. Never apply incompatible fluids or exceed pressure rating of the valve. Installation and valve maintenance to be performed by qualified personnel.

Note: Inlet port will either be marked "I" or "IN". Outlet port will be marked "2" or "OUT".

Future Service Considerations.

Provision should be made for performing seat leakage, external leakage, and operational tests on the valve with a nonhazardous,noncombustible fluid after disassembly and reassembly.

Temperature Limitations

For maximum valve ambient and fluid temperatures, refer to charts below. Check catalog number, coil prefix, suffix, and watt rating on nameplate to determine the maximum temperatures.

Wattage	Catalog Number Coil Prefix	Coil Class	Max. Ambient Temp. °F	Max. Fluid Temp. °F
6, 10.5, 12.4	none, DA or S	A	77	180
6,10.5 12.4	DF, FT or SF	F	125	180
6,10.5, 12.4	HT	H	140	180
9,10.7	none, DP or SP	F	77	180
9.7	none, FT or HT	A, F or H	77	120
11.2	none, FT or HT	A, F or H	77	150
16.7	none, DP or SP	F	77	200
17.1	none, KP SP or SD	F	125	180
17.1	HB, KB SS or SV	H	140	180

Catalog Nos.8262B200 and 8262 C200 AC construction only and Catalog Nos.8262B214 and 8262 D200 AC and DC construction are limited to 140°F fluid temperature.

Valves with Suffix V or W that are designed for AC service and normally closed operation are for use with No. 2 and 4 fuel oil service. These valves have the same maximum temperatures per the above table except Suffix W valves are limited to a maximum fluid temperature of 140°F.

Listed below are valves with Suffix V in the catalog number that are acceptable for higher temperatures.

Catalog Number Coil Prefix	Max. Ambient Temp.°F	Max. Fluid Temp.°F
FT8262, HB8262 FT8263, HB8263 8262G, 8263G	125	250*
HT or HB 8262G HT or HB 8263G	140	250

*The only exception is the 8262G and 8263G series (Class F coil) at 50 Hertz rated 11.1 and 17.1 watts are limited to 210°F fluid temperature.

Positioning

This valve is designed to perform properly when mounted in any position. However, for optimum life and performance, the solenoid should be mounted vertically and upright to reduce the possibility of foreign matter accumulating in the solenoid base sub-assembly area.

© Automatic Switch Co. MCMXCIII. All Rights Reserved

Printed in U.S.A.

Disassembly and Reassembly of Stem /T r Type Manual Operator (Refer to Figure 3)

NOTE: There are two stem/lever manual operator constructions. They are identified by the location of the core spring as *internal* or *external* spring construction.

1. Unscrew solenoid base sub–assembly from manual operator body.
2. Unscrew manual operator body from valve body. Then remove body gasket and stem retainer.
3. Slip stem/spacer sub–assembly with stem gasket from manual operator body. Remove core assembly with core spring from center of manual operator body.
4. All parts are now accessible for cleaning or replacement. Lubricate gaskets per *Valve Reassembly* step 2.
5. Position core ass / with core spring into base of manual operator body. Then install stem/spacer sub–assembly into manual operator body to engage with core assembly.
6. Reinstall stem retainer on body and stem/spacer sub–assembly.

IMPORTANT: The spacer on the stem/spacer sub–assembly must be *inside* of the stem retainer for *internal* spring construction and *outside* the stem retainer for *external* spring construction.

7. Replace body gasket and install manual operator assembly in valve body. Torque manual operator body to 175 ± 25 in–lbs [19,8 ± 2,8 Nm].
8. Replace solenoid base gasket and solenoid base sub–assembly. Torque solenoid base sub–assembly to 175 ± 25 in–lbs [19,8 ± 2,8 Nm].
9. Check manual operator for proper operation. Turn stem clockwise and counterclockwise; stem should turn freely without binding.

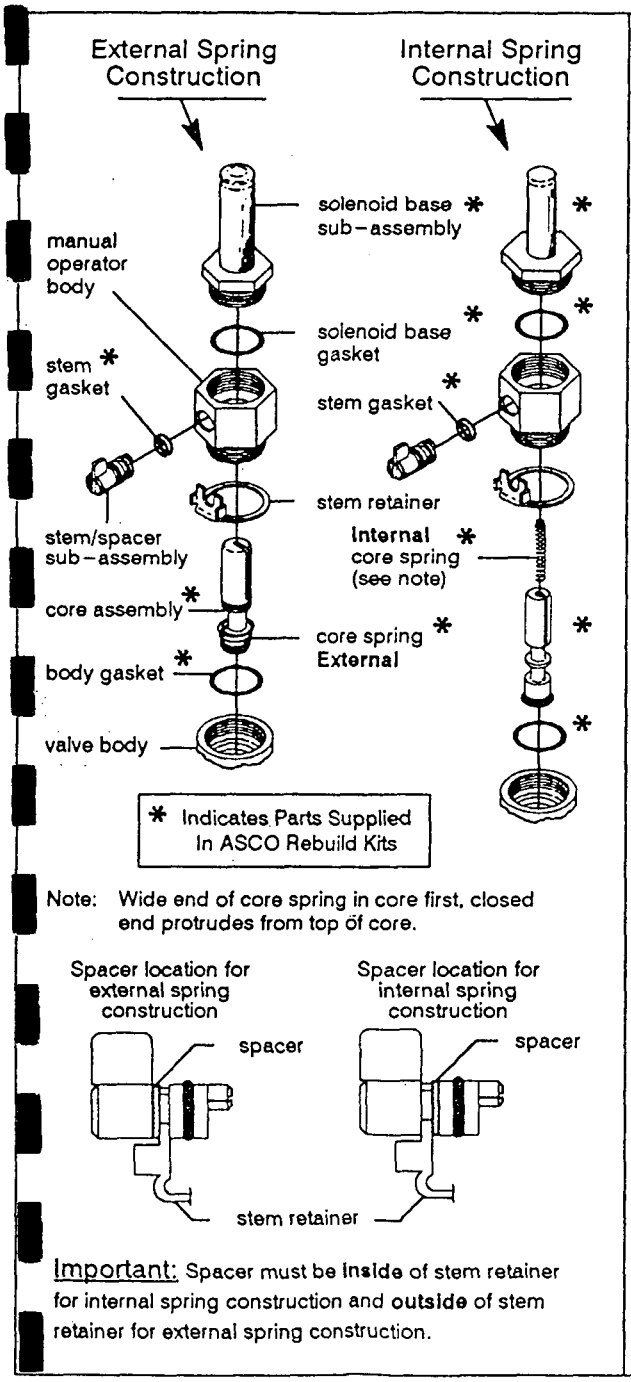

Figure 3. Stem/lever type manual operators

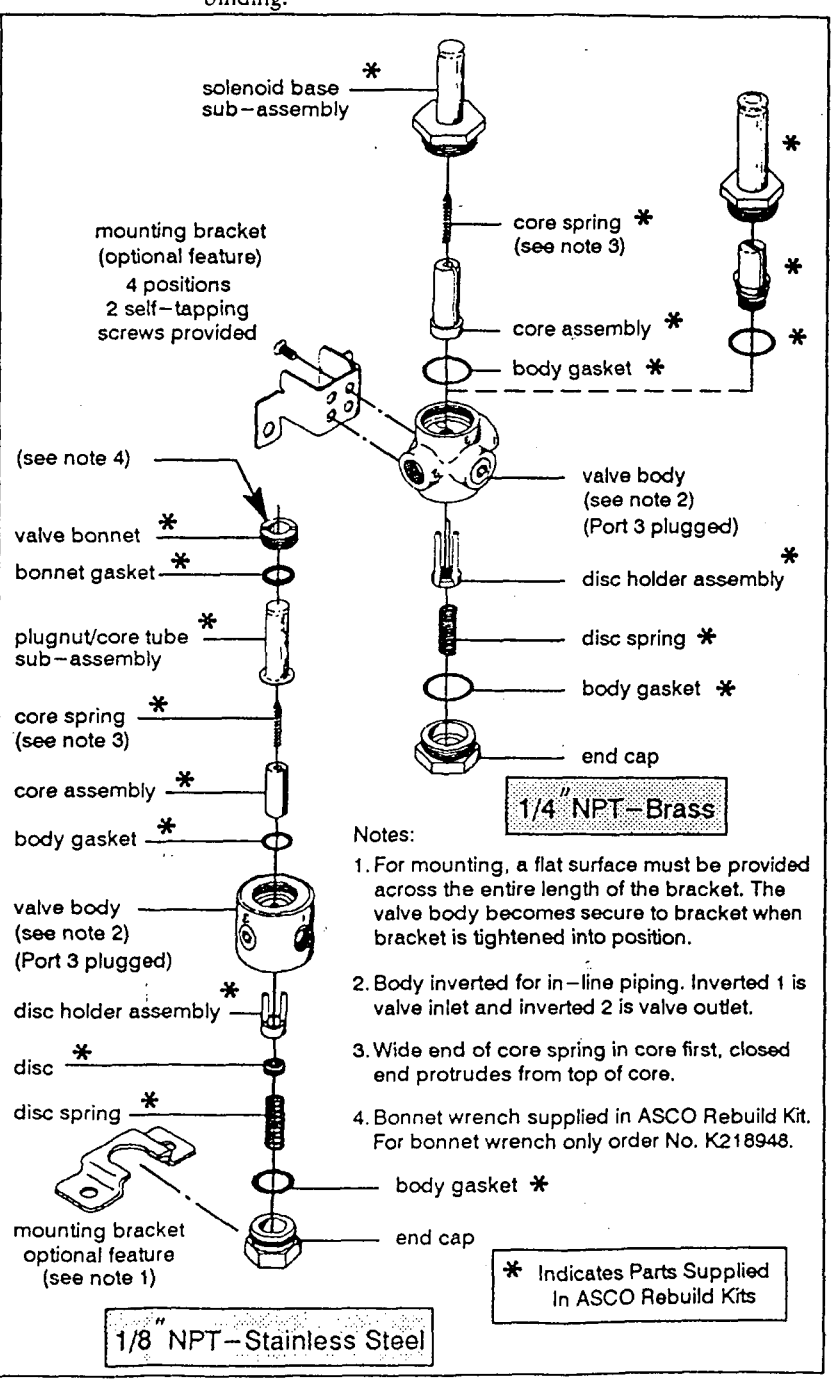

Figure 4. Series 8262, normally open construction.

ASCO Valves Automatic Switch Co. 50–60 Hanover Road, Florham Park, New Jersey 07932

Installation & Maintenance Instructions

OPEN–FRAME SOLENOIDS

SERIES
U8016
US8016

Form No.V6917

NOTICE: See separate valve installation and maintenance instructions for information on: Operation, Positioning, Mounting, Piping, Strainer or Filter Requirements, Flow Controls, Cleaning, Preventive Maintenance, Causes of Improper Operation, Disassembly and Reassembly of Basic Valve.

DESCRIPTION

Series U8016 are open–frame, pull type solenoid operators. When installed just as a solenoid and not attached to an ASCO valve, the core has a 0.250–28 UNF–2B tapped hole with 0.38 minimum full thread.

Series US8016 open–frame solenoid operators are the same as Series U8016 except they are provided with spade terminal coils.

OPERATION

When the solenoid is energized, the core is drawn into the solenoid base sub–assembly.

IMPORTANT: When the solenoid is de–energized, the initial return force for the core, whether developed by spring, pressure or weight, must exert a minimum force to overcome residual magnetism created by the solenoid. Minimum return force for AC construction is 11 ounces; 5 ounces for DC construction.

INSTALLATION

Check nameplate for correct catalog number, voltage, frequency, wattage and service.

⚠ CAUTION: To protect the solenoid valve or operator, install a strainer or filter, suitable for the service involved in the inlet side as close to the valve or operator as possible. Clean periodically depending on service conditions. See ASCO Series 8600, 8601 and 8602 for strainers.

⚠ WARNING: To prevent the possibility of electrical shock from the accessibility of live parts, install the open–frame solenoid in an enclosure.

Positioning

This solenoid is designed to perform properly when mounted in any position. However, for optimum life and performance, the solenoid should be mounted vertically and upright to reduce the possibility of foreign matter accumulating in the solenoid base sub–assembly area.

If open–frame solenoid is supplied on an ASCO valve, check basic valve instructions for positioning.

Mounting

Refer to Figure 1 (below) for mounting.

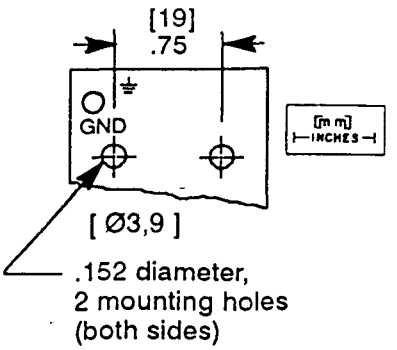

⚠ CAUTION: Be sure mounting screws do not penetrate yoke far enough to damage coil.

Figure 1. Yoke mounting dimension (partial view).

Wiring

Wiring must comply with local codes and the National Electrical Code. Coils are provided with lead wires or 1/4" spade terminals. The solenoid yoke is provided with a hole for a grounding screw, see Figure 2. Grounding screw not supplied with solenoid. To facilitate wiring, the solenoid may be rotated 360° by removing the retaining cap, clip or hi–shock clip.

⚠ CAUTION: When metal retaining clip disengages, it will spring upward.

Rotate solenoid enclosure to desired position. Then replace retaining cap, clip or hi–shock clip before operating. Be sure hi–shock retaining clip seat in circular groove around side wall of solenoid base sub–assembly. Tighten retaining clip securely so that the retaining clip ends meet.

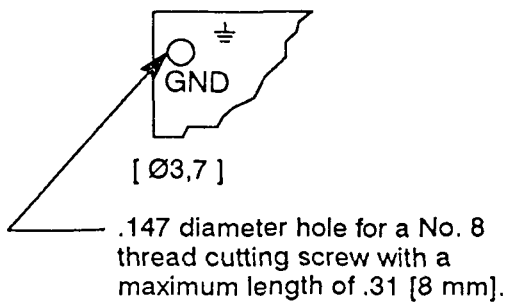

Figure 2. Hole for grounding screw (partial view).

© Automatic Switch Co. MCMXCV All Rights Reserved.

Printed in U.S.A.

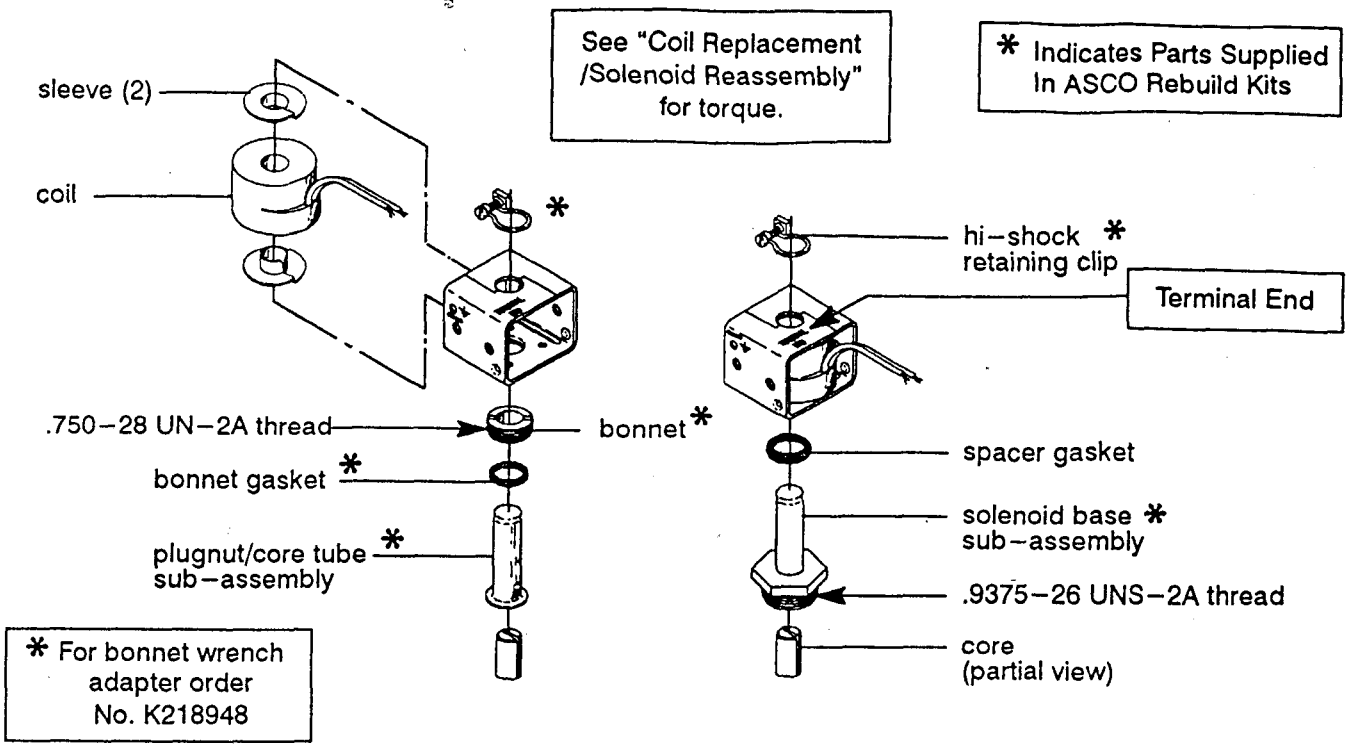

Figure 5. Series U8016 hi–shock clip construction – open–frame solenoid with leaded coil.

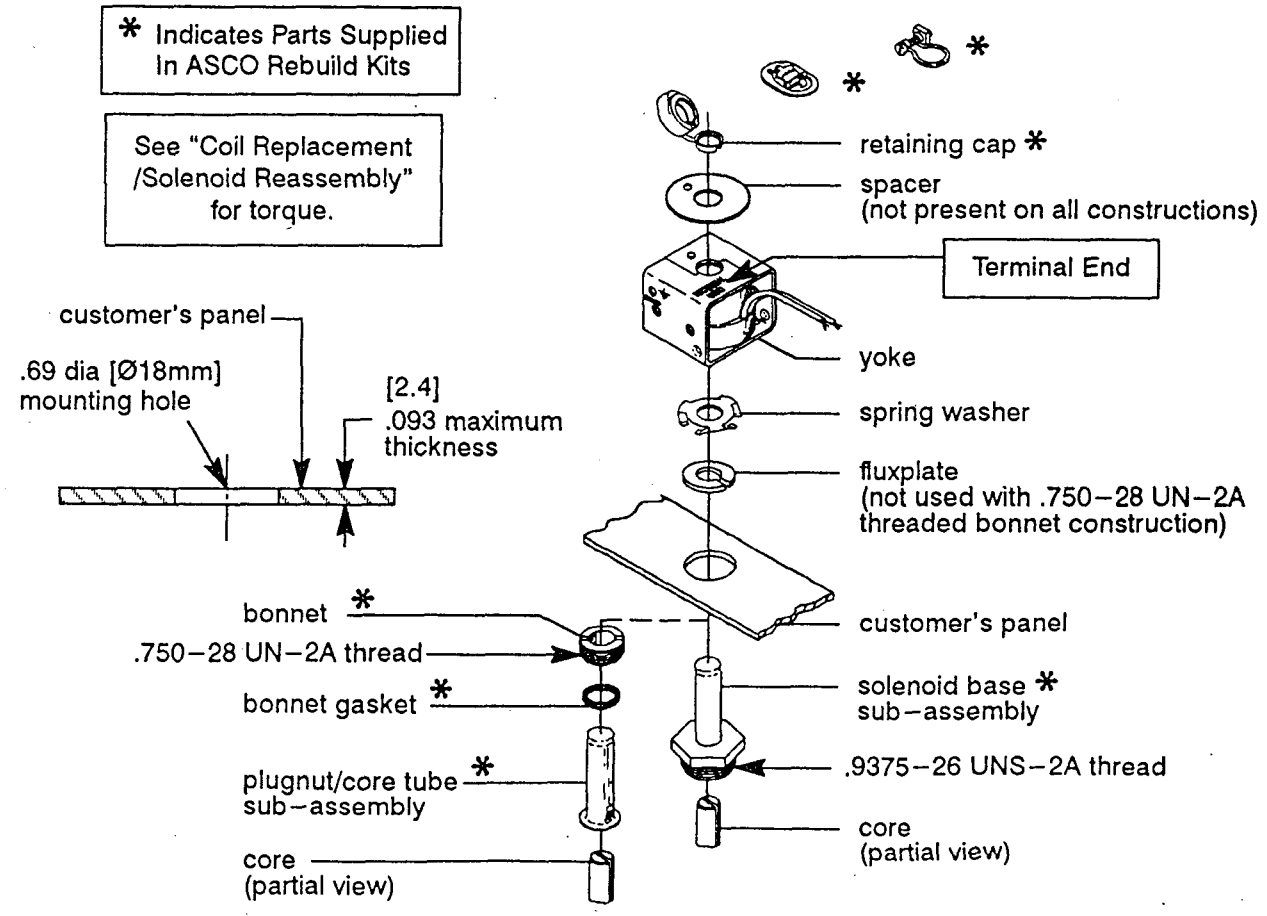

Figure 6. Series U8016 open–frame panel mount solenoid with leaded coil.

ASCO Valves Automatic Switch Co. 50–60 Hanover Road, Florham Park, New Jersey 07932