Seminole Energy, LLC
46280 Dylan Drive, Suite 200, Novi, Mi 48377

May 3, 2012

RECEIVED
MAY 15 2012
DIVISION OF AIR
RESOURCE MANAGEMENT

Mr. Syed Arif, P.E.
Emissions Monitoring Section Administrator
Florida Department of Environmental Protection
Bureau of Air Regulation
2600 Blair Stone Road
Mail Station 5510
Tallahassee, FL 32301

Subject: Stack Test Report for the verification of select emissions and opacity determinations from a landfill gas-fueled internal combustion engine operated at the Seminole Energy, L.L.C. facility in Geneva, Florida.
DEP File No.: 1170084-009-AC

Dear Mr. Arif:

Seminole Energy, L.L.C. is submitting the enclosed test report for the verification of volatile organic compounds, nitrogen oxides, carbon monoxide, and opacity determinations from the Unit #4 (EU005) CAT Model No. G3520C 2,233 brake-horsepower landfill gas-fueled engine used for electricity generation at the Seminole Energy, L.L.C. facility located at the Osceola Road Solid Waste Management Facility in Geneva, Florida.

Contact information is provided in the enclosed Stack Test Plan documentation, should you have any questions or require additional information.

Sincerely,

SEMINOLE ENERGY, L.L.C.

Rick DiGia
President and CEO

Enclosure

Phone: (248) 380-3920 Fax: (248) 380-2038

EMISSIONS TEST REPORT

Title	Compliance Test Report for the ICE #4-EU005 Landfill Gas Fueled G3520C Internal Combustion Engine Operated at the Seminole Energy, L.L.C., Osceola Road Solid Waste Management Facility, Seminole County, Florida
Report Date	May 1, 2012
Test Date(s)	March 22, 2012

Facility Information	
Name	Seminole Energy, L.L.C., Osceola Road Solid Waste Management Facility
City, County	Geneva, Seminole

Facility Permit Information			
DEP File No.:	1170084-009-AC	Permit No.:	PSD-FL-376B

Testing Contractor	
Company	Derenzo and Associates, Inc.
Mailing Address	39395 Schoolcraft Road Livonia, MI 48150
Phone	(734) 464-3880
Project No.	1201046

TABLE OF CONTENTS

LIST OF TABLES

LIST OF FIGURE(S)

LIST OF APPENDICES

COMPLIANCE TEST REPORT
FOR THE
LANDFILL GAS FUELED G3520C INTERNAL COMBUSTION ENGINE
OPERATED AT THE
SEMINOLE ENERGY, L.L.C.
OSCEOLA ROAD SOLID WASTE MANAGEMENT FACILITY
SEMINOLE COUNTY, FLORIDA

1.0 SOURCE INFORMATION

Seminole Energy, L.L.C. (Seminole Energy) is located at Osceola Solid Waste Management facility in Osceola County, Florida. The Facility File No. is 1170084-009-AC and the Permit No. is PSD-FL-376B. At its landfill gas to energy (LFGTE) facility, Seminole Energy is permitted to operate emission units (EU) 002 – 005 which consist of four (4) Caterpillar G3520C Lean Burn Reciprocating Engines and electricity generator sets. These engines are fueled with methane-rich gas, which is generated at the Osceola Solid Waste Management Facility Landfill, to power base load electricity generator operations.

The FDEP permit requires performance testing of a representative engine for the determination of specified pollutant emissions while the unit is operated at near base load conditions.

Compliance testing was performed to measure nitrogen oxides (NO_X), carbon monoxide (CO), Volatile Organic Compounds (VOC), and oxygen (O_2), concentrations and emission rates and opacity from the exhaust of the ICE #4 (EU005) engine pursuant to the testing requirements specified in the FDEP Air Construction Permit.

The compliance testing was performed on March 22, 2012 by Derenzo and Associates, Inc. personnel Michael Brack, Daniel Wilson, and Robert Bingham. Process operation coordination for the compliance demonstration was preformed by Landfill Energy Systems Operations Manager Damian Schmitt.

The exhaust gas sampling and analysis was performed using procedures specified in the submitted Test Protocol dated February 13, 2012.

Questions regarding this emission test report should be directed to:

Mr. Michael Brack
Field Services Manager
Derenzo and Associates, Inc.
39395 Schoolcraft Road
Livonia, MI 48150
(734) 464-3880

Mr. Damian Schmitt
Operations Manager
Landfill Energy Systems
46280 Dylan Drive, Suite 200
Novi, Mi 48377
(248) 380-3920

2.0 PLANT AND SAMPLING LOCATION DESCRIPTION

2.1 General Process Description

Methane-rich landfill gas (LFG) is produced in the Osceola Solid Waste Management Landfill from the anaerobic decomposition of disposed waste materials. The methane-rich LFG is collected from both active and capped landfill cells using a system of wells that are connected to a central header (gas collection system). The collected LFG is directed to the Seminole Energy facility where it is treated and used as fuel for the IC engine generators that produce electricity for transfer to the local utility.

The Seminole Energy facility currently consists of four (4) CAT Model No.G3520C IC internal combustion engines that are connected to individual electricity generators.

A process flow diagram for the LFG to electricity process is presented subsequent to the summary tables in this report. The engine tested is identified as EU005 in the FDEP Permit No. PSD-FL-376B.

2.2 Rated Capacities, Type and Quantity of Raw Materials Used

The representative CAT G3520C IC engine generator set was operated at base load conditions (i.e., +/- 10% of the design capacity of 2,233 brake horsepower) to produce a peak electricity output of 1,600 kilowatts (kW). Fuel (treated landfill gas) consumption is regulated to maintain the required heat input rate to support engine operations and is dependent on the fuel heat value (methane content). The average engine fuel consumption rate during the test periods was 673 scfm based on data recorded from the fuel flow meter installed and operated by Seminole Energy.

Appendix E provides engine generator process operating data collected during the compliance test.

2.3 Emission Control System Description

The engines incorporate state of the art technology in order to fire lean fuel mixtures and produce low combustion by-product emissions. Emissions from the combustion of LFG are released uncontrolled into the ambient air through a stack connected to the IC engine exhaust manifold and noise control system (noise muffler).

2.4 Sampling Locations (USEPA Method 1)

The exhaust stack sampling port for the Model G3520C IC engine satisfied the USEPA Method 1 criteria for a representative sample location. The inner diameter of the engine exhaust stacks is 15.5 inches. The stack is equipped with two (2) sample ports, opposed 90°, that provide a sampling location 53 inches (3.4 duct diameters) downstream and 124 inches (8 duct diameters) upstream from any flow disturbance.

Velocity pressure traverse locations for the sampling points were determined in accordance with USEPA Method 1 for the representative engine.

Included, following the summary tables is a diagram presenting the performance test sampling locations.

NOx, CO, and VOC results are calculated from the velocity pressure traverse pre-test and post-test averages for each 60-minute sampling period.

3.0 SUMMARY AND DISCUSSION OF TEST RESULTS

3.1 Purpose and Objectives of the Tests

Stack testing is required for engines EU- 002 through EU-005 to demonstrate compliance with the NO_X, CO, VOC, and opacity emission limits by permit conditions. The facility is required to perform initial, annual and permit renewal testing during a six-year period. This test event satisfies the 2012 annual performance test required by the permit.

The exhausts from the LFG-fueled IC engines were monitored for three (3) one-hour test periods during which the NO_X, CO, VOC, CO_2 and O_2 exhaust gas concentrations were measured using instrumental analyzers. The engine measurements consisted of triplicate 60-minute tests.

Exhaust gas moisture content from the representative engine was determined by gravimetric analysis of the weight gain in the chilled impingers. Velocity and volumetric flow rates were measured prior to and subsequent of each 60-minute test for the gaseous samples (i.e., NO_X and CO).

Opacity observations were made during one of the 60-minute test periods and were observed at the point of greatest opacity in the portion of the plume where condensed water vapor is not present, with continuous readings taken every 15 seconds.

The testing was performed while the IC engine was operated at normal base load conditions (1600 kW peak electricity output +/- 5%).

3.2 Variations from Normal Sampling Procedures or Operating Conditions

Testing for all pollutants were performed in accordance with the Test Protocol dated February 13, 2012 and specified USEPA test methods.

Instrument calibrations and sampling period results satisfied the quality assurance verifications required by USEPA Methods 3A, 7E, 10 and Alt 078.

3.3 Operating Conditions during Compliance Tests

The representative LFG-fueled IC engine was operated at base load (100% capacity +/- 10%) conditions during the compliance testing. The average kilowatt (kW) output values and fuel use values were recorded by the in 15 minute intervals during each test event. Process operating data was recorded by Seminole Energy personnel. The average LFG consumption rate during the testing was 673 standard cubic feet per minute (scfm). The average electrical output rate during the test event was 1,625 kW.

3.4 Air Pollutant Sampling Results

The following table presents the IC engine #4, (EU005) three-test average emission rates from the annual performance evaluation:

	Emission Parameter	Unit #4 (005) Emissions	Permit Limit
NOx	NO_X emissions (lb/hr)	2.33	3.00
	NO_X emissions (g/bhp-hr)	0.47	0.60
CO	CO emissions (lb/hr)	12.15	17.2
	CO emissions (g/bhp-hr)	2.52	3.5
VOC	VOC emissions (lb/hr)	1.28	1.40
	VOC emissions (g/bhp-hr)	0.26	0.28
O_2	Oxygen concentration (%)	7.37	-
Opacity	Highest 6-minute average (%)	0.0	10
HCl	HCl Emission Factor (lb/MMscf)	0.22	10.9
SO_2	SO_2 Emission Factor (lb/MMscf)	8.56	27.5

Notes
(lb/hr) pounds per hour, (g/bhp-hr) grams per brake horsepower hour, (lb/MMscf) pounds per million standard cubic feet

Summary Table 1, following the text portion of this report, present individual 60-minute measured gas conditions, and pollutant emission rates for the representative LFG-fueled IC engine.

Appendix A provides computer generated and field data sheets for the IC engine tests.

Appendix G provides raw instrumental analyzer response data for each test period.

4.0 SAMPLING AND ANALYTICAL PROCEDURES

A test protocol for the compliance testing was prepared by Derenzo and Associates and reviewed by the FDEP. This section provides a summary of the sampling and analytical procedures that were used during the test and presented in the test plan.

Appendix F presents diagrams of the USEPA sampling trains used for this compliance demonstration.

4.1 Exhaust Gas Velocity and Flowrate Determination (USEPA Method 2)

To properly determine air pollutant emission rates on a mass basis (e.g., pound per hour), IC engine exhaust stack gas velocities, and volumetric flow rates were determined using USEPA Method 2 prior to conducting tests. An S-type pitot tube, connected to a red-oil manometer, was used to determine velocity pressures at each measurement point. Gas temperatures were measured using a K-type thermocouple mounted to Type-S Pitot tube. The stainless-steel Pitot tube and connective tubing were leak-checked prior to each measurement event to verify the integrity of the measurement system.

The absence of cyclonic flow for each sampling location was verified using an S-type Pitot tube and oil manometer. The Pitot tube was positioned at all of the velocity traverse points with the planes of the face openings of the Pitot tube perpendicular to the stack cross-sectional plane. The Pitot tube was then rotated to determine the null angle (rotational angle as measured from the perpendicular, or reference, position at which the differential pressure is equal to zero).

Exhaust gas velocity pressure and temperature measurements were conducted prior to and subsequent of each 60-minute sampling period in accordance with USEPA Method 2.

4.2 Exhaust Gas Molecular Weight Determination (USEPA Method 3A)

CO_2 and O_2 content in the IC engine exhaust gas stream was measured continuously throughout each one-hour test period in accordance with USEPA Method 3A. The CO_2 content of the exhaust was monitored using a non-dispersive infrared (NDIR) gas analyzer. The O_2 content of the exhaust was monitored using a gas analyzer that utilizes a zirconia-ion sensor.

During each one-hour sampling period, a continuous sample of the IC engine exhaust gas stream was extracted from the stack using a stainless steel probe connected to a Teflon® heated sample line. The sampled gas was conditioned by removing moisture prior to being introduced to the analyzer; therefore, measurement of O_2 and CO_2 concentrations correspond to standard dry gas conditions. The instrument was calibrated using appropriate calibration gases to determine accuracy and system bias (described in Section 5.5 of this document).

4.3 Exhaust Gas Moisture Content Determinations (Method 4)

Moisture content of the IC engine exhaust gas was determined in accordance with USEPA Method 4 using a chilled impinger sampling train, which was performed concurrently with the instrumental analyzer sampling methodologies. During each sampling period, a gas sample was extracted at a predetermined rate from the source where moisture was removed from the sampled gas stream using impingers that were submersed in an ice bath. At the conclusion of each sampling period, the moisture gain in the impingers was determined gravimetrically by weighing each impinger to determine net weight gain.

Appendix F presents detailed gas sampling procedures for the USEPA sampling trains.

4.4 NO_x and CO Concentration Measurements (USEPA Method 7E and 10)

NO_X and CO pollutant concentrations in the exhaust of the IC engine were determined using a chemiluminescence NO_X analyzer and NDIR CO analyzer.

Three (3) one-hour sampling periods were performed for the IC engine exhaust testing. Throughout each one-hour test period, a continuous sample of the engine exhaust gas was extracted from the stack using the Teflon® heated sample line and gas conditioning system described in Appendix F of this document, and delivered to the instrumental analyzers. Instrument response for each analyzer was recorded on a data logging system that monitored the analog output of the instrumental analyzers continuously and logged data as one-minute averages. Prior to, and at the conclusion of each test, the instruments were calibrated using appropriate upscale calibration and zero gas to determine analyzer calibration error and system bias. Sampling times were recorded on field data sheets.

4.5 Measurement of VOC concentrations (USEPA Alt 078)

VOC as non-methane hydrocarbon (NMHC or NMOC) concentrations in the IC engine exhaust were determined using a Thermo Environmental Instruments, Inc. (TEI), Model 55C Methane-NMHC analyzer in accordance with USEPA Alternate Method (ALT) 078 for direct measurement of NMHC concentrations in exhaust gases for IC engines.

The TEI 55C is an automated batch analyzer that repeatedly collects and analyzes samples of the exhaust gas stream that are drawn into the instrument by the internal sampling pump. The sampled gas is separated by an internal gas chromatography (GC) column into methane and non- methane fractions and each fraction is analyzed separately using a flame ionization detector (FID), in accordance with USEPA Method 25A.

Samples of the exhaust gas will be delivered to the instrument analyzer using an extractive gas sampling system that prevents condensation or contamination of the sample. The exhaust gas samples will be delivered directly to the instrument analyzer. Therefore, VOC measurements correspond to standard conditions with no moisture correction (wet basis).

The specified instrument analyzer will be calibrated using certified propane concentrations in hydrocarbon-free air.

Appendix F provides information of a typical extractive gas sampling and conditioning system that was used to deliver engine exhaust gas samples to the gaseous analyzers.

4.6 Hydrogen Chloride Emission Factor based on Influent Gas Chlorinated Compounds

A representative sample of inlet landfill gas was collected in high-pressure stainless steel cylinders from the LFG common header at a location after the discharge side of the gas blower. The sampling system consisted of Teflon® connective tubing, a 7-micron stainless steel particulate filter, and an evacuated stainless steel sample cylinder.

Prior to shipment to the sampling site, the stainless steel sample cylinder was leak checked at the laboratory, by evacuating the tank within 10 millimeters of mercury (mm Hg) absolute pressure

and filled with helium to an absolute pressure of 345 mm Hg, and allowed to sit for at least 60 minutes. If no change in vacuum is observed on a mercury manometer or vacuum gauge, each tank is then considered to have an acceptable pre-test leak check. Final cylinder pressure was recorded at the sampling site prior to shipment to the laboratory. The cylinder pressure/vacuum was verified by laboratory personnel upon receipt to confirm sample container integrity.

The gas sample was shipped to Air Toxics, Ltd. (Folsom, California) and analyzed for specific chlorinated hydrocarbons, according to the procedures found in Compendium Method TO-15 of the USEPA. The target analytes included all chlorinated compounds listed in the TO-15 scan capabilities specified by the laboratory, as well as chlorinated compounds specified under USEPA Compilation of Air Pollutant Emission Factors, AP-42, Fifth Edition, Volume 1: *Stationary Point and Area Sources*, Table 2.4-1 (11/98) *Default Concentrations for LFG Constituents*. Target analytes that were not detected in the landfill gas sample were not included in the available chlorine atom total.

The LFG HCl emission factors were calculated by totaling the available chloride atoms in the fuel gas (as pounds per million standard cubic foot) and incorporating the fuel usage rate (as standard cubic feet per minute) for the test period. The resultant emission rate is reported in units of pounds per million standard cubic feet (lb/MMscf) fuel burned.

HCl emission factor calculations are presented in Appendix A. Laboratory data is presented in Appendix C.

4.7 Sulfur Dioxide Emission Factor based on Influent Gas Sulfur Bearing Compounds

Three separate integrated samples of the fuel used in the representative IC engine was sampled using a pre-cleaned Tedlar bag and analyzed for sulfur bearing compounds by Columbia Analytical Services, Simi Valley, California, using ASTM D-5504-01.

The Sulfur Dioxide (SO_2) emission rates were calculated by totaling the available sulfur atoms in the fuel gas (as lb/MMscf) and incorporating the fuel usage rate (as scfm) for the test period. The resultant emission rate is reported in units of lb/MMscf fuel burned.

SO_2 emission factor calculations are presented in Appendix A. Laboratory data is presented in Appendix C.

4.8 Visible Emissions Determinations (USEPA Method 9)

Opacity determinations were performed using USEPA Method 9 where 15-second readings recorded on an observation report for a total of 60 minutes. Observations were performed by a certified reader of opacity in accordance USEPA Method 9.

5.0 INTERNAL QA/QC ACTIVITIES

5.1 NO_x Converter Efficiency Test

The NO_2 – NO conversion efficiency of the TEI Model 42C instrumental analyzer was verified prior to the commencement of the performance tests. The instrument analyzer NO_2 – NO converter uses a catalyst at high temperatures to convert the NO_2 to NO for measurement. A USEPA Protocol 1 certified NO_2 calibration gas was used to verify the efficiency of the NO_2 – NO converter.

The NO_2 – NO conversion efficiency test satisfied the USEPA Method 7E criteria (the calculated NO_2 – NO conversion efficiency is greater than or equal to 90%).

5.2 Sampling System Response Time Determination

The response time of the sampling system was determined prior to the compliance test program by introducing upscale gas and zero gas, in series, into the sampling system using a tee connection at the base of the sample probe. The elapsed time for the analyzer to display a reading of 95% of the expected concentration was determined using a stopwatch.

5.3 Determination of Exhaust Gas Stratification

A stratification test for the representative IC engine exhaust stack was performed during the first 60-minute emissions test sampling period. The stainless steel sample probe was positioned at sample points correlating to 16.7, 50.0 (centroid) and 83.3% of the stack diameter. Pollutant concentration data was recorded at each sample point for a minimum of twice the maximum system response time.

The recorded data for the IC engine exhaust stack gas indicated that the measured CO concentrations did not vary by more than 5% of the mean across the stack diameter. Therefore, the stack gas was considered unstratified and the compliance test sampling was performed at a single sampling location which was closest to the mean CO concentration measured during the stratification test.

5.4 Instrumental Analyzer Interference Check

The instrumental analyzers used to measure NOx, CO, O_2 and CO_2 have had an interference response test performed prior to their use in the field, pursuant to the interference response test procedures specified in USEPA Method 7E. The appropriate interference test gases (i.e. gases that would be encountered in the exhaust gas stream) were introduced into each analyzer, separately and as a mixture with the analyte that each analyzer is designed to measure. All of analyzers exhibited a composite deviation of less than 3.0% of the span for all measured interferent gases. No major analytical components of the analyzers have been replaced since performing the original interference tests.

5.5 Instrument Calibration and System Bias Checks

At the beginning of each day, initial three-point instrument calibrations were performed by injecting calibration gas directly into the inlet sample port for each instrument. System bias checks were then preformed prior to and at the conclusion of each sampling period by introducing the appropriate upscale calibration gas and zero gas into the sampling system (at the base of the stainless steel sampling probe prior to the particulate filter and Teflon® heated sample line) and verifying the instrument response against the initial instrument calibration readings.

The instruments were calibrated with USEPA Protocol 1 certified concentrations of NO_X, CO, Propane, CO_2, O_2, and were zeroed using pure nitrogen or hydrocarbon-free air (for VOC measurements).

5.6 Meter Box Calibrations

The isokinetic sampling console, which was used for moisture testing, was calibrated prior to and after the testing program. This calibration uses the critical orifice calibration technique presented in USEPA Method 5. The metering consol calibration exhibited no data outside the acceptable ranges presented in USEPA Method 5.

All tests were within the required ± 10% isokinetic sampling rate required by USEPA Method 4.

Appendix B presents test equipment quality assurance data (i.e., NO_2 – NO conversion efficiency test data, instrument calibration and system bias check records, calibration gas certifications, interference test results, meter box calibration records, cyclonic flow determinations sheets, pitot tube calibration records, and opacity observation certification).

This test report has been reviewed and is approved for submittal to FDEP by the following representatives:

I hereby certify that the information given in this report is correct to the best of my knowledge.

Report Prepared By:

Daniel Wilson
Field Technician
Derenzo and Associates, Inc.

Report Reviewed By:

Michael J. Brack
Field Services Manager
Derenzo and Associates, Inc.

Report Certification

I certify that all data required and provided to the person conducting the test are true and correct to the best of my knowledge.

Report Certified By:

Rick DiGia
President and CEO
Seminole Energy, L.L.C.

Table 1. Summary of Engine #4 (EU005) Exhaust Emissions Test Results (CAT G3520C)
Seminole Energy, LLC - Geneva, Florida

Test No.	1	2	3	
Test date	03/22/12	03/22/12	03/22/12	Test
Test period (24-hr clock)	09:55 - 10:55	11:45 - 12:45	13:45 - 14:35	Avg.
Generator Output (kW)	1,632	1,616	1,628	1,625
Engine Horsepower (Hp)	2,278	2,255	2,272	2,268
Exhaust gas composition				
CO_2 content (% vol)	12.2	12.1	12.0	12.1
O_2 content (% vol)	7.34	7.37	7.39	7.37
Moisture (% vol)	13.3	14.0	12.8	13.4
Exhaust gas flowrate				
Standard conditions (scfm)	5,313	5,448	5,433	5,398
Dry basis (dscfm)	4,587	4,717	4,738	4,681
Nitrogen oxides emission rates				
NO_X conc. (ppmvd)*	67.5	69.8	70.8	69.4
NO_X emissions (lb/hr NO_2)	2.22	2.36	2.40	2.33
NO_X permit limit (lb/hr)				*3.00*
NO_X emissions (g/bhp-hr)	0.44	0.48	0.48	0.47
NO_X permit limit (g/bhp-hr)				*0.60*
Carbon monoxide emission rates				
CO conc. (ppmvd)*	596.7	594.7	592.8	594.7
CO emissions (lb/hr)	11.94	12.24	12.26	12.15
CO permit limit (lb/hr)				*17.20*
CO emissions (g/bhp-hr)	2.38	2.46	2.45	2.43
CO permit limit (g/bhp-hr)				*3.50*
VOC/NMHC emission rates				
VOC conc. (ppmv C_3)	34.5	34.4	34.4	34.5
VOC emissions (lb/hr)	1.26	1.29	1.29	1.28
VOC permit limit (lb/hr)				*1.40*
VOC emissions (g/bhp-hr)	0.25	0.26	0.26	0.26
VOC permit limit (g/bhp-hr)				*0.28*
Opacity observations				
Visible emissions (%)- Highest 6-minute average				0.00
Visible emissions (%)- Highest 6-minute average limit				*10.00*

* Corrected for calibration bias.

Table 2. Summary of Engine #4 (EU005) Emissions based on Fuel Characterization
Seminole Energy, LLC - Geneva, Florida

Sulfur Dioxide Emission Factor for LFG Combustion

LFG Influent Sulfur Compound	Measured Concentrations (ppmv)	Molecular Formula	No. Sulfur Atoms	Sulfur Content as H_2S (ppmv)	Resulting SO_2 Emission Factor (lb/MMscf)
Hydrogen sulfide	41.6	H_2S	1	41.6	6.89
Methyl mercaptan	4.9	CH_4S	1	4.93	0.8
Dimethyl sulfide	5.2	C_2H_6S	1	5.2	0.86
Total SO2 emission factor (lb/MMscf)				**51.7**	**8.56**
			SO_2 permit limit(lb/MMscf)		*27.5*

Hydrogen Chloride Emission Factor for LFG Combustion

LFG Influent Chlorine Compounds[1]	Measured Concentration (ppm)	Molecular Formula	No. Chlorine Atoms	HCl Content (ppmv)	Resulting HCl Emission Factor (lb/MMscf)
Freon 12 (Dichlorodifluoromethane)	0.220	CCl_2F_2	2	0.44	0.041
1,2-Dichloroethene (as cis-1,2-Dichloroethene)	0.220	$C_2H_2Cl_2$	2	0.44	0.041
1,2-Dichloroethane	0.066	$C_2H_4Cl_2$	2	0.13	0.012
Trichloroethene	0.087	C_2HCl_3	3	0.26	0.025
Tetrachloroethene (Perchloroethene)	0.160	C_2Cl_4	4	0.64	0.060
Chlorobenzene	0.087	C_6H_5Cl	1	0.09	0.008
1,4-Dichlorobenzene	0.167	$C_6H_4Cl_2$	2	0.33	0.031
Total HCl emission factor (lb/MMscf)				**2.33**	**0.22**
			HCl permit limit (lb/MMscf)		*10.9*

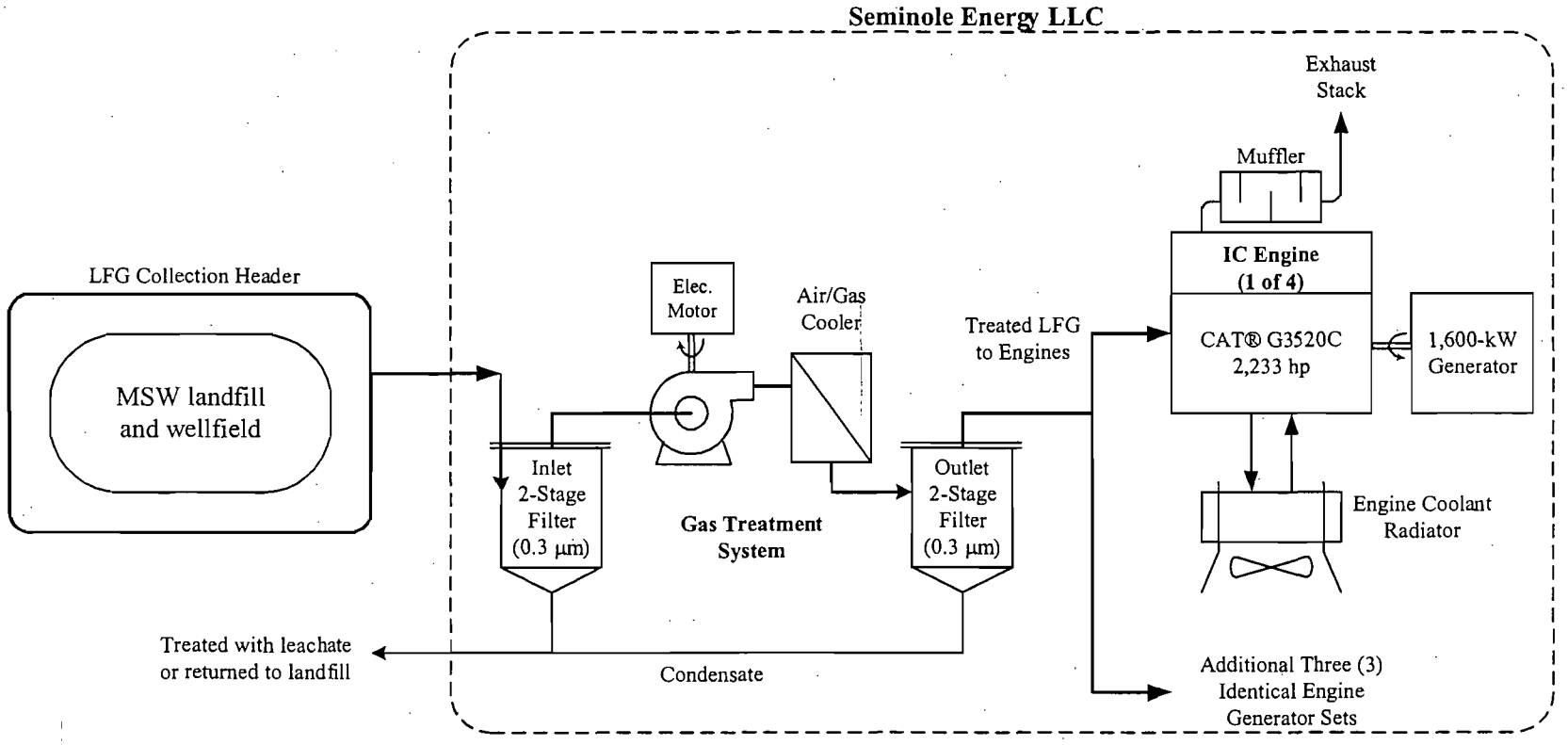

Figure 1.

Seminole Energy LLC LFG Electricity Generation Facility		
Scale None	Sheet 1 of 1	Derenzo and Associates Project No. 1201046

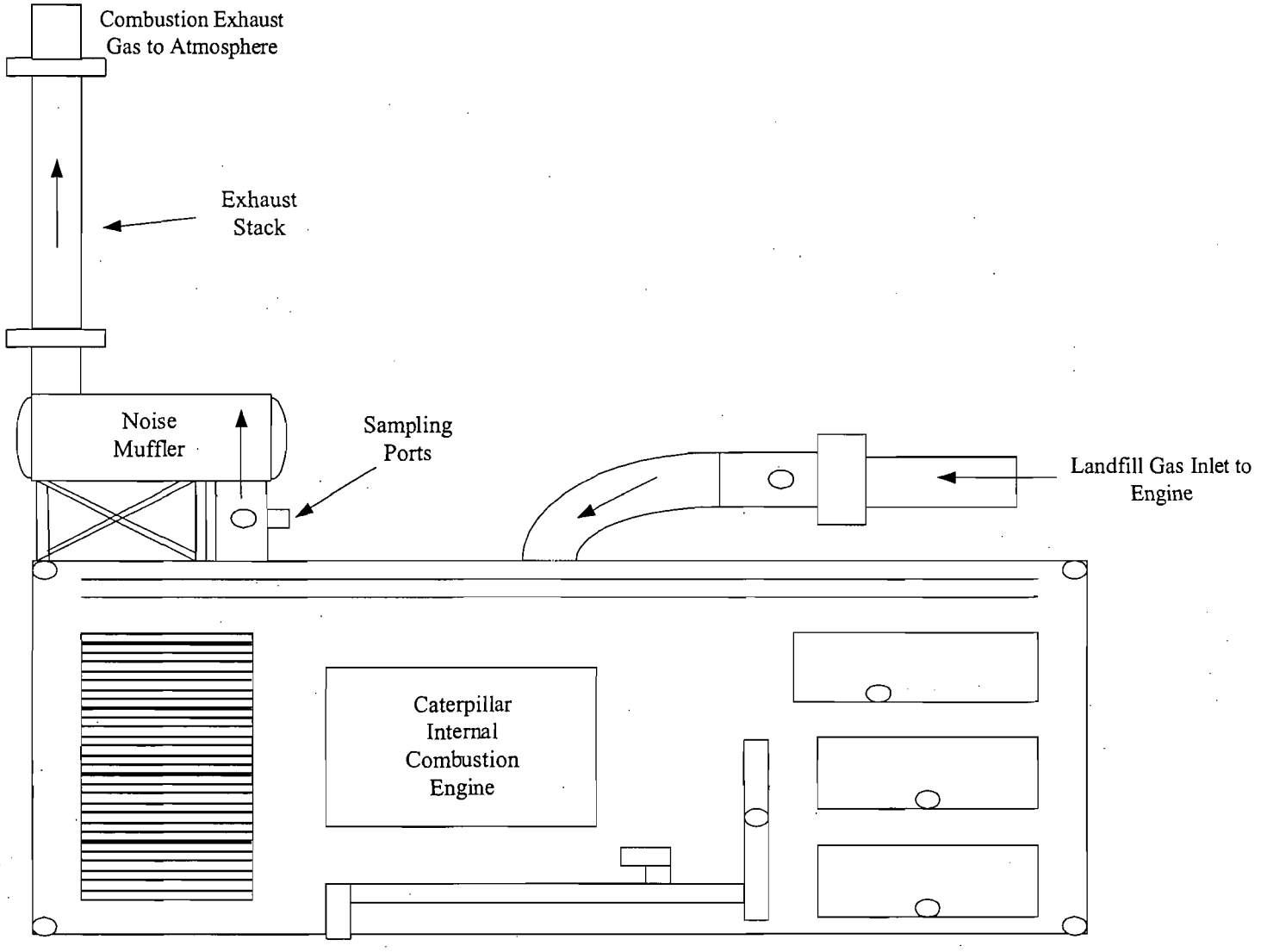

Figure 2

2/7/2012	**Seminole Energy LLC General Engine Operation Flow Diagram**		
	Scale None	Sheet 1 of 1	Derenzo and Associates Project No. 1201046

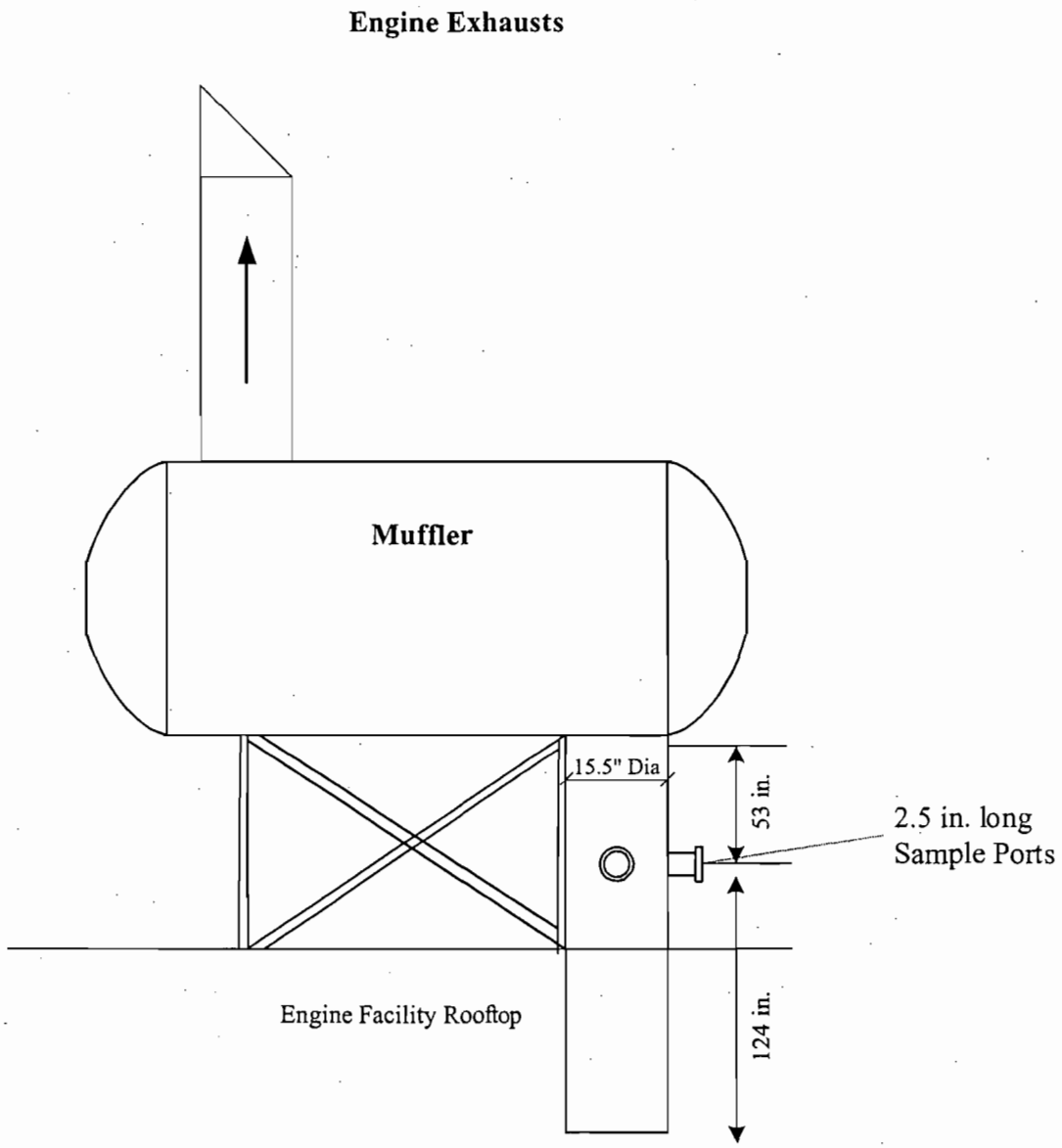

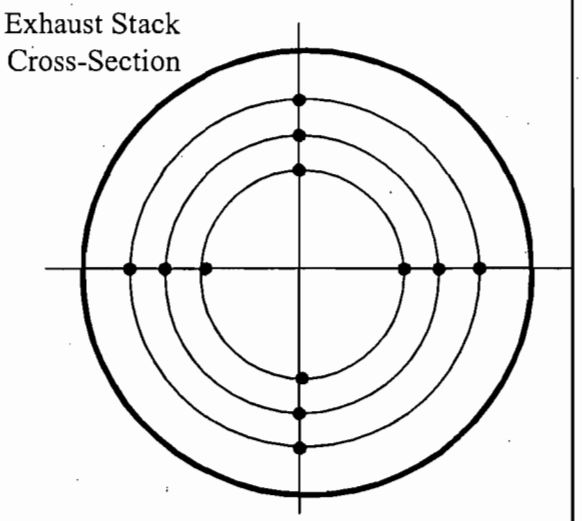

Velocity sample locations as measured from sample port opening

Sample Port	
Pt. #	in.
1	3.18
2	4.76
3	7.09
4	13.41
5	15.74
6	17.32

Figure 3

Seminole Energy LLC
Exhaust Sample Locations

Scale	Sheet	Derenzo and Associates
None	1 of 1	Project No. 1201046

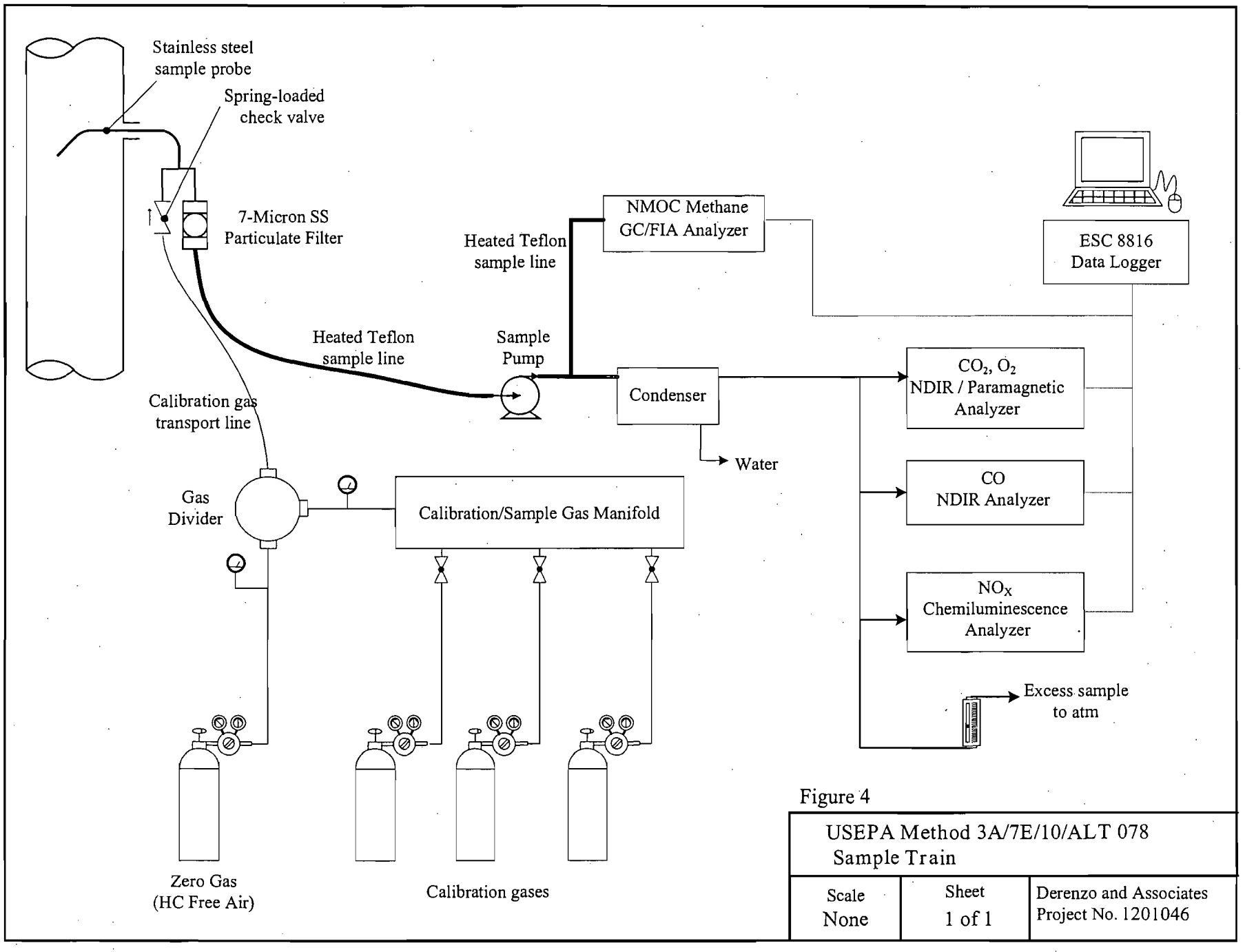

Figure 4

USEPA Method 3A/7E/10/ALT 078 Sample Train

Scale	Sheet	Derenzo and Associates
None	1 of 1	Project No. 1201046

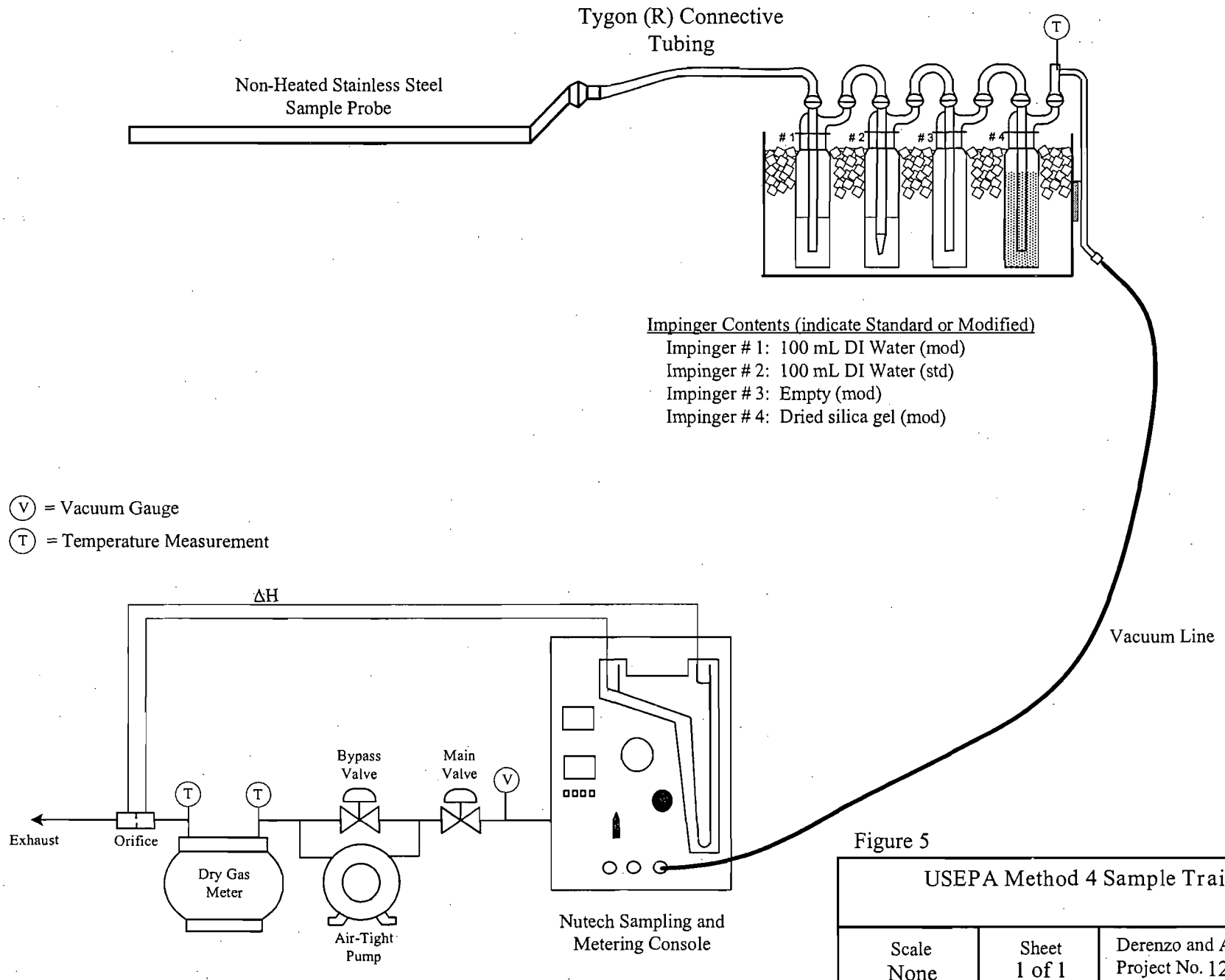

Figure 5

USEPA Method 4 Sample Train		
Scale None	Sheet 1 of 1	Derenzo and Associates Project No. 1201046

APPENDIX A

COMPUTER GENERATED AND FIELD DATA

Derenzo & Associates, Inc.

EPA Method 25A/ALT 078 NMOC Calculation Summary

Company	Seminole Energy
Location	Geneva, FL
Source	EU005 (ICE#4)
Date	03/22/12
Measurement	NMOC by TEI 55C - USEPA Method Alt-078

		Test 1	Test 2	Test 3	
Average NMOC concentration, as C_3H_8	=	34.48	34.43	34.45	ppmv

NMOC Emission Rate lb/hr as Propane

Volumetric flow rate	=	5,313	5,448	5,433	scfm
$E_{VOC} = (C_{d\ dry\ as\ C3H8})\ (Qwstd)\ (60\ min/hr)\ (MW_{C3H8})\ /\ (V_M)$	=	1.26	1.29	1.29	lb/hr

where:

C_d	= observed NMOC concentration, wet basis (ft^3 NMOC / 10^6 ft^3 stack gas)
$Q_d$std	= stack gas flowrate (scfm)
$MW_{propane}$	= molecular weight Propane (44.01 lb/lb-mol)
V_M	= molar volume of ideal gas at std conditions (385 ft^3/lb-mol)

NMOC Emission Factor g/bHp*hr as Propane

Average generator kilowatt output	=	1,632	1,616	1,628	kW
Engine Output (bHp*hr) = (kWavg)/(0.961)/(0.7457 kW/bHp*hr)	=	2278	2255	2272	bHp

where:

kW_{avg}	= average recorded generator kilowatt output
0.961	= engine to generator efficiency
0.7457	= conversion factor, kilowatts to brake horsepower * hour

(E_{VOC}) (453.6 g/lb) / (bHp*hr)	=	0.25	0.26	0.26	g/bHp*hr

where:

E_{CO}	= NMOC emission rate (lb/hr as Propane)
453.6	= conversion factor, grams to pounds
bHp*hr	= engine brake horsepower hour

Derenzo & Associates, Inc.
EPA Method 7E NOx Calculation Summary

Company	Seminole Energy
Location	Geneva, FL
Source	EU005 (ICE#4)
Date	3/22/2012

		Test 1	Test 2	Test 3	
Average NOx concentration	=	66.85	68.65	69.19	ppmv
Average pre-test and post-test instrument zero	=	0.96	0.96	0.69	ppmv
Average pre-test and post-test instrument calibration	=	78.37	77.85	77.44	ppmv
Midrange calibration gas concentration	=	79.3	79.3	79.3	ppmv
Volumetric flow rate	=	4,587	4,717	4,738	dscfm
Average generator kilowatt output	=	1,632	1,616	1,628	kW

NOx CONCENTRATION CORRECTED FOR CALIBRATION AND ZERO DRIFT

C_d = (NOx conc.-Avg. zero)x(Cal. gas conc.)/(Avg. cal.-Avg. zero)	=	67.5	69.8	70.8	ppmv

NOx EMISSION RATE, AS NO_2

$E_{NOx} = (C_d)\ (Q_d std)\ (60\ min/hr)\ (MW_{NO2})\ /\ (V_M)$	=	2.22	2.36	2.41	lb/hr as NO_2

where:
C_d = observed NOx concentration, dry basis (ft^3 NOx / 10^6 ft^3 stack gas)
$Q_d$std = stack gas flowrate (dscfm)
MW_{NOx} = molecular weight NO_2 (46.0 lb/lb-mol)
V_M = molar volume of ideal gas at std conditions (385 ft^3/lb-mol)

Engine Output (bHp) = $(kW_{avg})/(0.961)/(0.7457\ kW/bHp)$	=	2278	2255	2272	bHp

where:
kW_{avg} = average recorded generator kilowatt output
0.96 = engine to generator efficiency
0.7457 = conversion factor, kilowatts to brake horsepower

(E_{NOx}) (453.6 g/lb) / (bHp)	=	0.44	0.48	0.48	g/bHp*hr

where:
E_{NOx} = NOx emission rate (lb/hr)
453.6 = conversion factor, grams to pounds
bHp = engine brake horsepower

Derenzo & Associates, Inc.
EPA Method 10 CO Calculation Summary

Company: Seminole Energy
Location: Geneva, FL
Source: EU005 (ICE#4)
Date: 3/22/2012

		Test 1	Test 2	Test 3	
Average CO concentration	=	594.4	594.2	593.2	ppmv
Average pre-test and post-test instrument zero	=	0.29	0.92	1.85	ppmv
Average pre-test and post-test instrument calibration	=	781.2	783.4	784.2	ppmv
Midrange calibration gas concentration	=	784.3	784.3	784.3	ppmv
Volumetric flow rate	=	4,587	4,717	4,738	dscfm
Average generator kilowatt output	=	1,632	1,616	1,628	kW

CO CONCENTRATION CORRECTED FOR CALIBRATION AND ZERO DRIFT

C_d = (CO conc.-Avg. zero)x(Cal. gas conc.)/(Avg. cal.-Avg. zero)	=	596.7	594.7	592.8	ppmv

CO EMISSION RATE

$E_{CO} = (C_d)\ (Q_d std)\ (60\ min/hr)\ (MW_{CO})\ /\ (V_M)$	=	11.95	12.25	12.26	lb/hr

where:
C_d = observed CO concentration, dry basis (ft^3 CO / 10^6 ft^3 stack gas)
$Q_d$std = stack gas flowrate (dscfm)
MW_{CO} = molecular weight CO (28.0 lb/lb-mol)
V_M = molar volume of ideal gas at std conditions (385 ft^3/lb-mol)

Engine Output (bHp) = $(kW_{avg})/(0.961)/(0.7457\ kW/bHp)$	=	2278	2255	2272	bHp

where:
kW_{avg} = average recorded generator kilowatt output
0.961 = engine to generator efficiency
0.7457 = conversion factor, kilowatts to brake horsepower

(E_{CO}) (453.6 g/lb) / (bHp)	=	2.38	2.46	2.45	g/bHp*hr

where:
E_{CO} = CO emission rate (lb/hr)
453.6 = conversion factor, grams to pounds
bHp = engine brake horsepower

Derenzo & Associates, Inc.

EPA Method 3A CO_2 Calculation Summary

Company:	Seminole Energy
Location:	Geneva, FL
Source:	EU005 (ICE#4)
Date:	3/22/2012

Test ID	=	1	2	3
Average CO_2 concentration	=	11.97	11.92	11.89 %
Average pre-test and post-test instrument zero	=	0.02	0.02	0.02 %
Average pre-test and post-test instrument calibration	=	13.48	13.48	13.51 %
Midrange calibration gas concentration	=	13.70	13.70	13.70 %

CO_2 CONCENTATION CORRECTED FOR CALIBRATION AND ZERO DRIFT

(CO_2 conc.-Avg. zero)x(Cal. gas conc.)/(Avg. cal.-Avg. zero)	=	12.2	12.1	12.0 %

Derenzo & Associates, Inc.
EPA Method 3A O_2 Calculation Summary

Company: Seminole Energy
Location: Geneva, FL
Source: EU005 (ICE#4)
Date: 3/22/2012

Test ID	=	1	2	3	
Average O_2 concentration	=	7.32	7.34	7.36	%
Average pre-test and post-test instrument zero	=	0.01	0.01	0.01	%
Average pre-test and post-test instrument calibration	=	8.36	8.35	8.35	%
Midrange calibration gas concentration	=	8.38	8.38	8.38	%

O_2 CONCENTATION CORRECTED FOR CALIBRATION AND ZERO DRIFT

(O_2 conc.-Avg. zero)x(Cal. gas conc.)/(Avg. cal.-Avg. zero)	=	7.34	7.37	7.39	%

EXHAUST GAS VELOCITY, MOISTURE, AND FLOWRATE CALCULATION SHEET

Company	Seminole Energy		
Source Designation	ICE4 (EU005)	**Pitot Tube Number**	5F-1
Test Date	3/22/2012	**Pitot Tube Corr. Factor**	0.84
Test Number	Pre 1	**% CO_2**	12.16
Time	9:25	**% O_2**	7.34
Barometric Pressure	30.26	**% CO**	0.00
Stack Static Pressure	9.0	**% N_2**	80.50
Stack Diameter (in.)	15.5	**Md**	30.24
Traverse points	12	**Ms**	28.61
Operator	RB/DW	**Moisture Content (%)**	13.3

Traverse Point Number	Stack Temp. (°F)	Velocity Pres. ("H2O)	Traverse Point Number	Stack Temp. (°F)	Velocity Pres. ("H2O)
Side A			Side B		
1	982	2.70	1	973	3.35
2	983	2.75	2	972	3.75
3	981	3.05	3	971	3.95
4	978	3.40	4	970	4.05
5	964	3.90	5	961	4.20
6	958	3.95	6	949	4.15
Average	974	3.29		966	3.91

Average Velocity Pressure ("H_2O)	3.600
Average Velocity Pressure Sqrt ("H_2O)	1.892
Meter Pressure ("Hg)	30.44
Stack Pressure ("Hg)	30.92
Stack Gas Specific Gravity (Gs)	0.99
Average Stack Temperature (°F)	970
Average Stack Velocity (fps)	172.8
Average Stack Velocity (fpm)	10366.5
Area of Stack (ft^2)	1.310
Flowrate (Actual-CFM)	13,584
Flowrate (Standard Wet-SCFM)	5,183
Flowrate (Standard Dry-DSCFM)	4,493

Moisture Calculation	
Bws=	0.133
Cond. Vol.=	3.84
Samp. Vol. std=	24.99
Vwc=	72.5
Wsg=	9
Vmf=	240.010
Vmi=	214.544
Ym=	0.9971
Delta H=	2.5
Tm=	86

Dry Gas Meter Temperatures

Minutes	DGM Temp In	DGM Temp Out
0	81	80
5	87	81
10	89	81
15	92	82
20	94	82
25	95	83

EXHAUST GAS VELOCITY, MOISTURE, AND FLOWRATE CALCULATION SHEET

Company	Seminole Energy		
Source Designation	ICE4 (EU005)	**Pitot Tube Number**	5F-1
Test Date	3/22/2012	**Pitot Tube Corr. Factor**	0.84
Test Number	Pre 2	**% CO_2**	12.11
Time	11:40	**% O_2**	7.37
Barometric Pressure	30.26	**% CO**	0.00
Stack Static Pressure	8.60	**% N_2**	80.52
Stack Diameter (in.)	15.5	**Md**	30.23
Traverse points	12	**Ms**	28.52
Operator	RB/DW	**Moisture Content (%)**	14.0

Traverse Point Number	Stack Temp. (°F)	Velocity Pres. ("H2O)	Traverse Point Number	Stack Temp. (°F)	Velocity Pres. ("H2O)
Side A			Side B		
1	962	3.50	1	964	3.80
2	963	3.70	2	967	3.85
3	964	4.00	3	966	3.90
4	967	3.95	4	966	3.70
5	962	4.30	5	959	3.85
6	959	4.30	6	957	4.25
Average	963	3.96		963	3.89

Average Velocity Pressure ("H_2O)	3.925
Average Velocity Pressure Sqrt ("H_2O)	1.980
Meter Pressure ("Hg)	30.44
Stack Pressure ("Hg)	30.89
Stack Gas Specific Gravity (Gs)	0.98
Average Stack Temperature (°F)	963
Average Stack Velocity (fps)	180.7
Average Stack Velocity (fpm)	10843.7
Area of Stack (ft^2)	1.310
Flowrate (Actual-CFM)	14,209
Flowrate (Standard Wet-SCFM)	5,444
Flowrate (Standard Dry-DSCFM)	4,680

Moisture Calculation	
Bws=	0.140
Cond. Vol.=	4.09
Samp. Vol. std=	25.06
Vwc=	77.5
Wsg=	9.3
Vmf=	266.135
Vmi=	240.297
Ym=	0.9971
Delta H=	2.5
Tm=	92

Dry Gas Meter Temperatures

Minutes	DGM Temp In	DGM Temp Out
0	86	85
5	92	86
10	97	87
15	100	88
20	102	88
25	103	90

EXHAUST GAS VELOCITY, MOISTURE, AND FLOWRATE CALCULATION SHEET

Company	Seminole Energy		
Source Designation	ICE4 (EU005)	**Pitot Tube Number**	5F-1
Test Date	3/22/2012	**Pitot Tube Corr. Factor**	0.84
Test Number	Pre 3	**% CO_2**	12.05
Time	13:22	**% O_2**	7.39
Barometric Pressure	30.26	**% CO**	0.00
Stack Static Pressure	8.70	**% N_2**	80.56
Stack Diameter (in.)	15.5	**Md**	30.22
Traverse points	12	**Ms**	28.66
Operator	RB/DW	**Moisture Content (%)**	12.8

Traverse Point Number	Stack Temp. (°F)	Velocity Pres. ("H2O)	Traverse Point Number	Stack Temp. (°F)	Velocity Pres. ("H2O)
Side A			Side B		
1	954	3.50	1	959	3.80
2	959	3.80	2	962	4.05
3	960	4.05	3	964	4.10
4	964	3.95	4	964	4.10
5	956	4.10	5	957	4.00
6	952	4.05	6	952	3.80
Average	958	3.91		960	3.98

Average Velocity Pressure ("H_2O)	3.942
Average Velocity Pressure Sqrt ("H_2O)	1.985
Meter Pressure ("Hg)	30.44
Stack Pressure ("Hg)	30.90
Stack Gas Specific Gravity (Gs)	0.99
Average Stack Temperature (°F)	959
Average Stack Velocity (fps)	180.4
Average Stack Velocity (fpm)	10824.1
Area of Stack (ft^2)	1.310
Flowrate (Actual-CFM)	14,183
Flowrate (Standard Wet-SCFM)	5,452
Flowrate (Standard Dry-DSCFM)	4,754

Moisture Calculation	
Bws=	0.128
Cond. Vol.=	3.66
Samp. Vol. std=	24.93
Vwc=	71.9
Wsg=	5.8
Vmf=	292.250
Vmi=	266.463
Ym=	0.9971
Delta H=	2.5
Tm=	94

Dry Gas Meter Temperatures

Minutes	DGM Temp In	DGM Temp Out
0	88	88
5	94	89
10	98	89
15	101	90
20	103	91
25	104	91

EXHAUST GAS VELOCITY, MOISTURE, AND FLOWRATE CALCULATION SHEET

Company	Seminole Energy		
Source Designation	ICE4 (EU005)	**Pitot Tube Number**	5F-1
Test Date	3/22/2012	**Pitot Tube Corr. Factor**	0.84
Test Number	Post 3	**% CO_2**	12.05
Time	14:45	**% O_2**	7.39
Barometric Pressure	30.26	**% CO**	0.00
Stack Static Pressure	8.90	**% N_2**	80.56
Stack Diameter (in.)	15.5	**Md**	30.22
Traverse points	12	**Ms**	28.66
Operator	RB/DW	**Moisture Content (%)**	12.8

Traverse Point Number	Stack Temp. (°F)	Velocity Pres. ("H2O)	Traverse Point Number	Stack Temp. (°F)	Velocity Pres. ("H2O)
Side A			Side B		
1	963	3.60	1	958	3.70
2	965	3.75	2	962	3.95
3	964	3.90	3	963	4.05
4	965	3.85	4	967	4.00
5	960	3.90	5	959	3.90
6	952	4.10	6	953	4.00
Average	962	3.85		960	3.93

Average Velocity Pressure ("H_2O)	3.892
Average Velocity Pressure Sqrt ("H_2O)	1.972
Meter Pressure ("Hg)	30.44
Stack Pressure ("Hg)	30.91
Stack Gas Specific Gravity (Gs)	0.99
Average Stack Temperature (°F)	961
Average Stack Velocity (fps)	179.4
Average Stack Velocity (fpm)	10762.4
Area of Stack (ft^2)	1.310
Flowrate (Actual-CFM)	14,103
Flowrate (Standard Wet-SCFM)	5,415
Flowrate (Standard Dry-DSCFM)	4,722

Moisture Calculation	
Bws=	0.128
Cond. Vol.=	3.66
Samp. Vol. std=	24.93
Vwc=	71.9
Wsg=	5.8
Vmf=	292.250
Vmi=	266.463
Ym=	0.9971
Delta H=	2.5
Tm=	94

Dry Gas Meter Temperatures

Minutes	DGM Temp In	DGM Temp Out
0	88	88
5	94	89
10	98	89
15	101	90
20	103	91
25	104	91

Derenzo and Associates, Inc.

Six-Minute USEPA Method 9 Opacity Averages
for the
Unit #4 (EU005) Caterpillar Model G3520C Engine
at
Seminole Energy, L.L.C.
Osceola Road Solid Waste Facility - Seminole County, Florida
Test Date: March 22, 2012

Start Time: 9:59 End Time: 10:59 Page 1 of 1

Minute	Second				6-min
	0	15	30	45	Average
1	0	0	0	0	—
2	0	0	0	0	—
3	0	0	0	0	—
4	0	0	0	0	—
5	0	0	0	0	—
6	0	0	0	0	0.0
7	0	0	0	0	0.0
8	0	0	0	0	0.0
9	0	0	0	0	0.0
10	0	0	0	0	0.0
11	0	0	0	0	0.0
12	0	0	0	0	0.0
13	0	0	0	0	0.0
14	0	0	0	0	0.0
15	0	0	0	0	0.0
16	0	0	0	0	0.0
17	0	0	0	0	0.0
18	0	0	0	0	0.0
19	0	0	0	0	0.0
20	0	0	0	0	0.0
21	0	0	0	0	0.0
22	0	0	0	0	0.0
23	0	0	0	0	0.0
24	0	0	0	0	0.0
25	0	0	0	0	0.0
26	0	0	0	0	0.0
27	0	0	0	0	0.0
28	0	0	0	0	0.0
29	0	0	0	0	0.0
30	0	0	0	0	0.0
31	0	0	0	0	0.0
32	0	0	0	0	0.0
33	0	0	0	0	0.0
34	0	0	0	0	0.0
35	0	0	0	0	0.0
36	0	0	0	0	0.0
37	0	0	0	0	0.0
38	0	0	0	0	0.0
39	0	0	0	0	0.0
40	0	0	0	0	0.0
41	0	0	0	0	0.0
42	0	0	0	0	0.0
43	0	0	0	0	0.0
44	0	0	0	0	0.0
45	0	0	0	0	0.0
46	0	0	0	0	0.0
47	0	0	0	0	0.0
48	0	0	0	0	0.0
49	0	0	0	0	0.0
50	0	0	0	0	0.0
51	0	0	0	0	0.0
52	0	0	0	0	0.0
53	0	0	0	0	0.0
54	0	0	0	0	0.0
55	0	0	0	0	0.0
56	0	0	0	0	0.0
57	0	0	0	0	0.0
58	0	0	0	0	0.0
59	0	0	0	0	0.0
60	0	0	0	0	0.0
			6-minute average maximum		0.0

Seminole Energy, LLC (March 27, 2012 Sample)

Sulfur Dioxide Emission Factor for LFG Combustion

LFG Influent Sulfur Compound	Analytical Report Concentrations[A] (ppmv)	Molecular Formula	No. Sulfur Atoms	Sulfur Content[B] as H_2S (ppmv)	Resulting SO_2 Emission Rate (lb./MMcf)
Hydrogen sulfide	41.6	H_2S	1	41.6	6.89 *
Carbonyl sulfide	<0.80	CSO	1	<0.80	<0.13
Methyl mercaptan	4.9	CH_4S	1	4.93	0.8
Ethyl mercaptan	<0.80	C_2H_6S	1	<0.80	<0.13
Dimethyl sulfide	5.2	C_2H_6S	1	5.2	0.86
Carbon disulfide	<1.00	CS_2	2	<2.00	<0.33
Isopropyl mercaptan	<0.80	C_3H_6S	1	<0.80	<0.13
tert-Butyl mercaptan	<0.80	$C_4H_{10}S$	1	<0.80	<0.13
n-Propyl mercaptan	<0.80	C_3H_8S	1	<0.80	<0.13
Ethyl methyl sulfide	<0.80	C_3H_8S	1	<0.80	<0.13
Thiophene	<0.80	C_4H_4S	1	<0.80	<0.13
Isobutyl mercaptan	<0.80	$C_4H_{10}S$	1	<0.80	<0.13
Diethyl sulfide	<0.80	$CH_3CH_2SCH_2CH_3$	1	<0.80	<0.13
n-Butyl mercaptan	<0.80	$C_4H_{10}S$	1	<0.80	<0.13
3-Methyl Thiophene	<0.80	C_5H_6S	1	<0.80	<0.13
Dimethyl disulfide	<0.80	CH_3SSCH_3	2	<1.60	<0.26
Tetrahydrothiophene	<0.80	$C_4H_8O_2S$	1	<0.80	<0.13
2-Ethylthiophene	<0.80	C_6H_8S	1	<0.80	<0.13
2,5-Dimethylthiopene	<0.80	C_6H_8S	1	<0.80	<0.13
Diethyl disulfide	<0.80	CH_3SSCH_3	2	<1.60	<0.26
Total				**<68.1**	**<11.28** [C]

Notes

A. March 28, 2012 LFG sample laboratory analytical results (see Attachment) (average of 3 smaples)

B. Determined by multiplying concentration by number of sulfur atoms in the molecule.

C. Calculation of SO_2 emission factor from sulfur content, as H_2S:

(68.1 scf H_2S/MMcf LFG) (1 scf SO_2/scf H_2S) (64.06 lb.SO_2/mol) / (387 ft^3/mol)
= 11.3 lb SO_2/MMcf LFG

* Sample calculation: SO_2 generation from hydrogen sulfide (H_2S):

(41.6 scf H_2S/MMcf LFG) (1 scf SO_2/scf H_2S) (64.06 lb.SO_2/mol) / (387 ft^3/mol)
= 6.89 lb SO_2/MMcf LFG

Seminole Energy, LLC (March 27, 2012 Sample)

Sulfur Dioxide Emission Factor for LFG Combustion

LFG Influent Sulfur Compound	Measured Concentrations[A] (ppmv)	Molecular Formula	No. Sulfur Atoms	Sulfur Content[B] as H_2S (ppmv)	Resulting SO_2 Emission Rate (lb./MMcf)
Hydrogen sulfide	41.6	H_2S	1	41.6	6.89 *
Methyl mercaptan	4.9	CH_4S	1	4.93	0.8
Dimethyl sulfide	5.2	C_2H_6S	1	5.2	0.86
Total				**51.7**	**8.56**

Notes

A. March 28, 2012 LFG sample laboratory analytical results (see Attachment) (average of 3 smaples)

B. Determined by multiplying concentration by number of sulfur atoms in the molecule.

* Sample calculation: SO_2 generation from hydrogen sulfide (H_2S):

(41.6 scf H_2S/MMcf LFG) (1 scf SO_2/scf H_2S) (64.06 lb.SO_2/mol) / (387 ft^3/mol)

= 6.89 lb SO_2/MMcf LFG

Seminole Energy, LLC (March 22, 2012 Sample)

LFG Combustion Hydrogen Chloride Emission Factor

LFG Influent Chlorine Coumpounds	Analytical Report Concentration[1] (ppm)	Molecular Formula	No. Chlorine Atoms	HCl Emission Factor (lb./MMcf)
Freon 12 (Dichlorodifluoromethane)	0.220	CCl_2F_2	2	0.041 *
Freon 114 (Dichlorotetrafluroethane)	<0.050	$C_2Cl_2F_4$	2	<0.009
Chloromethane	<0.500	CH_3Cl	1	<0.047
Vinyl Chloride	<0.050	C_2HCl	1	<0.005
Chloroethane	<0.200	C_2H_5Cl	1	<0.019
Freon 11 (Fluorotrichloromethane)	<0.050	$CFCl_3$	3	<0.014
Freon 113 (1,1,2-trichloro-1,2,2-trifluoroethane)	<0.050	$C_2Cl_2F_3$	2	<0.009
3-Chloropropene	<0.200	C_3H_5Cl	1	<0.019
Methylene Chloride (Dichloromethane)	<0.500	CH_2Cl_2	2	<0.094
1,2-Dichloroethene (as cis-1,2-Dichloroethene)	0.220	$C_2H_2Cl_2$	2	0.041
1,2-Dichloroethene (as trans-1,2-Dichloroethene)	<0.050	$C_2H_2Cl_2$	2	<0.009
1,1-Dichloroethane	<0.050	$C_2H_4Cl_2$	2	<0.009
1,1-Dichloroethene	<0.050	$C_2H_2Cl_2$	2	<0.009
Chloroform	<0.050	$CHCl_3$	3	<0.014
1,1,1-Trichloroethane	<0.050	$C_2H_3Cl_3$	3	<0.014
Carbon Tetrachloride	<0.050	CCl_4	4	<0.019
1,2-Dichloroethane	0.066	$C_2H_4Cl_2$	2	0.012
Trichloroethene	0.087	C_2HCl_3	3	0.025
1,2-dichloropropane	<0.050	$C_3H_6Cl_2$	2	<0.009
Bromodichloromethane	<0.050	$CBrCl_2$	2	<0.009
1,3-Dichloropropene (as cis-1,3-Dichloropropene)	<0.050	$C_3H_4Cl_2$	2	<0.009
1,3-Dichloropropene (as trans-1,3-Dichloropropene)	<0.050	$C_3H_4Cl_2$	2	<0.009
1,1,2-Trichloroethane	<0.050	$C_2H_3Cl_3$	3	<0.014
Tetrachloroethene (Perchloroethene)	0.160	C_2Cl_4	4	0.060
Dibromochloromethane	<0.050	$CHBr_2Cl$	1	<0.005
Chlorobenzene	0.087	C_6H_5Cl	1	0.008
1,1,2,2-Tetrachloroethane	<0.050	$C_2H_2Cl_4$	4	<0.019
1,3-Dichlorobenzene	<0.050	$C_6H_4Cl_2$	2	<0.009
1,4-Dichlorobenzene	0.167	$C_6H_4Cl_2$	2	0.031
alpha-Chlorotoluene	<0.050	C_7H_7Cl	1	<0.005
1,2-Dichlorobenzene	<0.050	$C_6H_4Cl_2$	2	<0.009
1,2,4-Trichlorobenzene	<0.200	$C_6H_3Cl_3$	3	<0.057
Hexachlorobutadiene	<0.200	C_4Cl_6	6	<0.113
Total hydrogen chloride emission factor (lb./MMcf)				**<0.78**

Notes

1. March 24, 2012 LFG sample laboratory analytical results (average of 3 samples).

* Example calculation for Freon 12 that assumes complete conversion of chloride to HCl

(0.220 ft^3 Freon 12/MMcf LFG) (2 mol HCl/mol Freon 12) (36.46 lb. HCl/mol) / (387 ft^3/mol)

= 0.041 lb. HCl/MMcf LFG

Seminole Energy, LLC (March 22, 2012 Sample)

LFG Combustion Hydrogen Chloride Emission Factor

LFG Influent Chlorine Compounds[1]	Measured Concentration (ppm)	Molecular Formula	No. Chlorine Atoms	HCl Emission Factor (lb./MMcf)
Freon 12 (Dichlorodifluoromethane)	0.220	CCl_2F_2	2	0.041 *
1,2-Dichloroethene (as cis-1,2-Dichloroethene)	0.220	$C_2H_2Cl_2$	2	0.041
1,2-Dichloroethane	0.066	$C_2H_4Cl_2$	2	0.012
Trichloroethene	0.087	C_2HCl_3	3	0.025
Tetrachloroethene (Perchloroethene)	0.160	C_2Cl_4	4	0.060
Chlorobenzene	0.087	C_6H_5Cl	1	0.008
1,4-Dichlorobenzene	0.167	$C_6H_4Cl_2$	2	0.031
Total hydrogen chloride emission factor (lb./MMcf)				**0.22**

Notes

1. March 24, 2012 LFG sample laboratory analytical results (average of 3 samples).

* Example calculation for Freon 12 that assumes complete conversion of chloride to HCl
(0.220 ft^3 Freon 12/MMcf LFG) (2 mol HCl/mol Freon 12) (36.46 lb. HCl/mol) / (387 ft^3/mol)
= 0.041 lb. HCl/MMcf LFG

PITOT TUBE INSPECTION CRITERIA CHECKLIST

Tube #: 5F-1

Date: 3/15/12

$3/16" \leq D_t \leq 3/8"$ — Yes No

$P_A = P_B$ — Yes No

$1.05D_t \leq P_{A,B} \leq 1.5D_t$ — Yes No

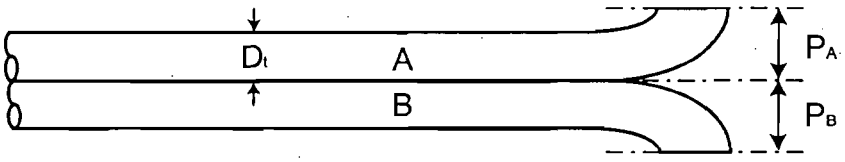

α_1 and $\alpha_2 < 10°$ — Yes No

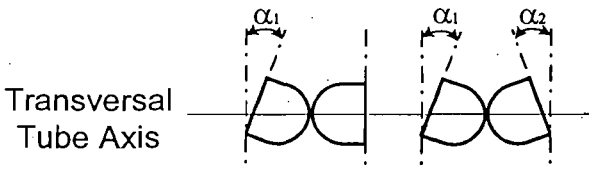

β_1 and $\beta_2 < 5°$ — Yes No

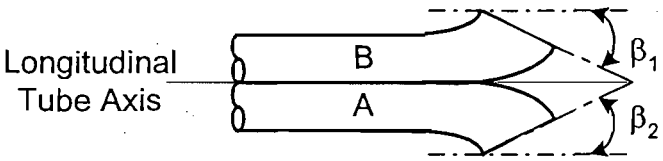

$z < 0.32$ cm — Yes No

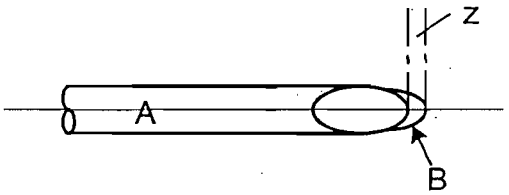

$w < 0.08$ cm — Yes No

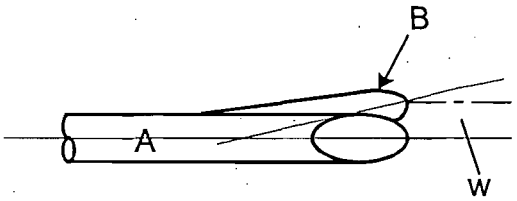

Pitot Tube Correction Factor: 0.84

MTB

BEST AVAILABLE COPY

Derenzo and Associates, Inc.

USEPA Method 2

Gas Velocity Measurement Data Sheet

Company	Seminole Energy	No. of Points	12
Source Designation	ICE #4 (E4005)	Operator(s)	DW/RB
Test Date	3/21/12	Pitot Type	Type S or Standard
Test Number	Pre-lim	Pitot Identification	6F
Time (24-hr clock)	1357-1405	O_2 Content (%)	
Barometric Press. (in. Hg)	30.28	CO_2 Content (%)	
Static Pressure (in. H_2O)	+8.9	Wet Bulb Temp.	

Inches from Stack Wall	Traverse Point Number	Stack Temperature (°F)	Velocity Head (in. H_2O)	Null Angel (zero angle)
3.18	1	963	3.60	
4.76	2	965	3.95	
7.09	3	967	4.20	
13.41	4	968	4.10	
15.74	5	962	4.55	
17.32	6	952	4.60	
	1	962	3.75	
	2	966	3.85	
	3	970	3.90	
	4	972	3.60	
	5	969	3.40	
	6	965	3.60	

Stack / Duct Measurements

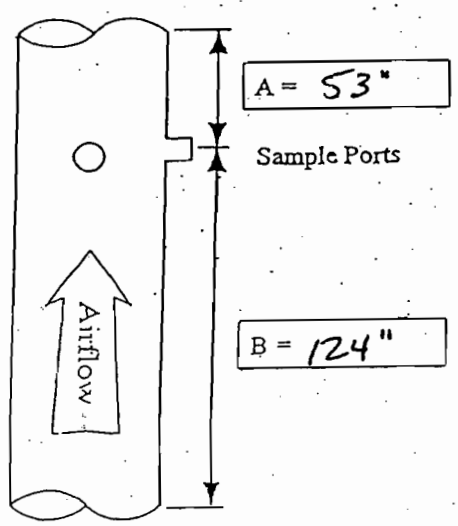

Round Duct Dia. (D) 15.5"

Square Duct (LxW) x

Square Duct Dia. (De): De = 2LW / (L+W)

Straight Length: (diameters) A / D

B / D

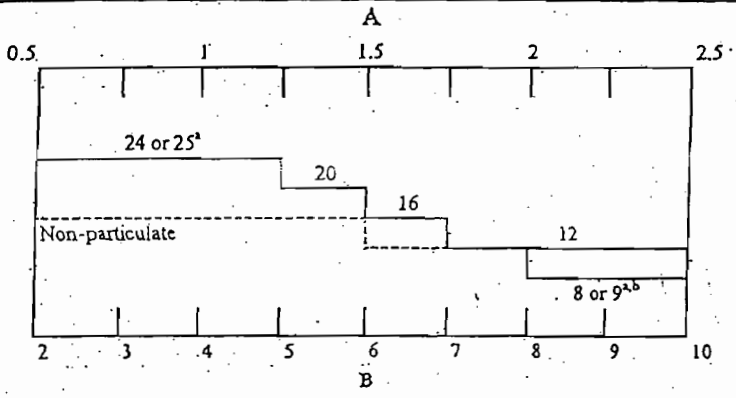

a- Higher No. for rectanguar stacks

b- For stacks between 12 and 24 in.

Traverse Point	No. of Traverse Points Per Dia. 6	8	10	12
1	4.4	3.2	2.6	2.1
2	14.6	10.5	8.2	6.7
3	29.6	19.4	14.6	11.8
4	70.4	32.3	22.6	17.7
5	85.4	67.7	34.2	25.0
6	95.6	80.6	65.8	35.6
7		89.5	77.4	64.4
8		96.8	85.4	75.0
9			91.8	82.3
10			97.4	88.2
11				93.3
12				97.9

Strat Pt - 1) - 5 ok 2) 10.2 ok 2) 15 ok

Derenzo and Associates, Inc.

USEPA Method 2
Gas Velocity Measurement Data Sheet

Company	Seminole Energy	No. of Points	12
Source Designation	ICC #4 (E4005)	Operator(s)	DW / RB
Test Date	3/22/12	Pitot Type	Type S or Standard
Test Number	Pre-1	Pitot Identification	5F
Time (24-hr clock)	9:25	O_2 Content (%)	
Barometric Press. (in. Hg)	30.26	CO_2 Content (%)	
Static Pressure (in. H_2O)	+9.0	Wet Bulb Temp.	

Inches from Stack Wall	Traverse Point Number	Stack Temperature (°F)	Velocity Head (in. H_2O)	Null Angel (zero angle)
	1	982	2.70	0
	2	983	2.75	2
	3	981	3.05	2
	4	978	3.40	2
	5	964	3.90	5
	6	958	3.95	3
	1	973	3.35	7
	2	972	3.75	8
	3	971	3.95	6
	4	970	4.05	2
	5	961	4.20	1
	6	949	4.15	3

Stack / Duct Measurements

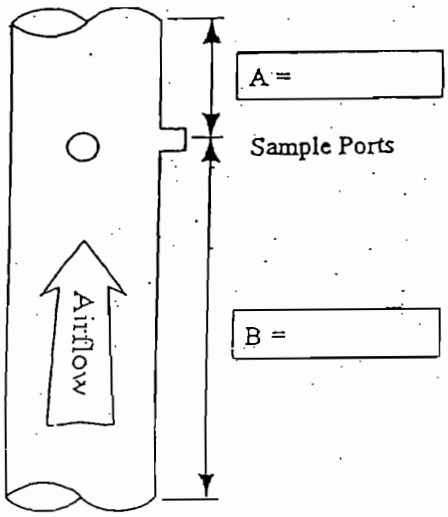

Round Duct Dia. (D) _____

Square Duct (LxW) _____ x _____

Square Duct Dia. (De): _____
De = 2LW / (L+W)

Straight Length: (diameters) A / D _____
B / D _____

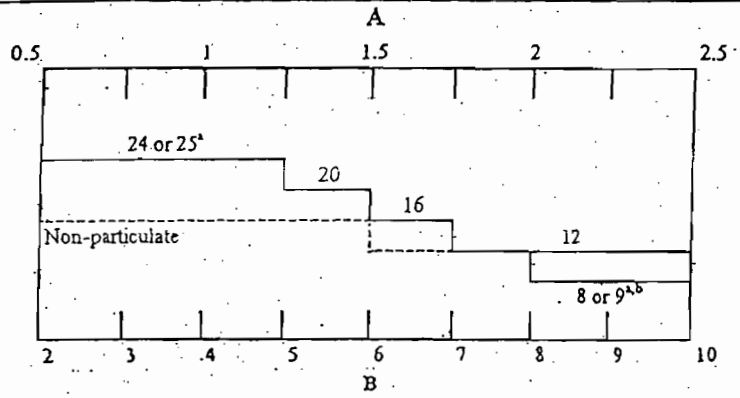

a- Higher No. for rectanguar stacks
b- For stacks between 12 and 24 in.

Traverse Point	No. of Traverse Points Per Dia. 6	8	10	12
1	4.4	3.2	2.6	2.1
2	14.6	10.5	8.2	6.7
3	29.6	19.4	14.6	11.8
4	70.4	32.3	22.6	17.7
5	85.4	67.7	34.2	25.0
6	95.6	80.6	65.8	35.6
7		89.5	77.4	64.4
8		96.8	85.4	75.0
9			91.8	82.3
10			97.4	88.2
11				93.3
12				97.9

Method 4 Isokinetic Field Sampling Data Sheet

Company	Seminole Energy				
Source Designation	ICE #4 (EU005)				
Test Date	3/22/12	Pitot Number	–	Leak Rate Init	0.000 @ 15
Test Number	M-1	Meter Number	N-3	Leak Rate Fin.	0.000 @ 8"
Operator	DW/MB	Kiso	1661.932	Traverse points	–
Filter Numbers	–	Delta H@	1.897	Pitot Cp	0.84
Bar. Press (Pb)	30.28	Assumed H2O	11	Meter Yd Factor	0.9971
Static Press (Ps)		Cond.Vol. (Vlc-1)	72.5	Molecular Weight (%)	
Stack Dia (in.)	15.5	SG Gain (Vlc-2)	9.0	O_2	CCM
		Nozzle Dia (in.)	–	CO_2	DATA

Impinger	Final Wt (ml / g)	Initial Wt (ml / g)	Net Gain (ml / g)
1st	746.5	701.7	44.8
2nd	691.9	685.7	6.2
3rd	617.7	616.2	1.5
Silica Gel	863.4	854.4	9.0

Traverse Point Number	Sampling Time (Min) ø	Time (24 hour)	Train Vacuum ("Hg)	Orifice Differential ("H2O) ΔH	Sample Vol (ft3) Vm	DGM Temp. Inlet (°F) Tm	DGM Temp. Outlet (°F) Tm	Last Imp. Temp. (°F)
centroid	0	1005	7	2.5	214.544	81	80	65
	5	1010	6	2.5	218.81	87	81	65
	10	1015	6	2.5	223.09	89	81	65
	15	1020	6	2.5	227.32	92	82	65
	20	1025	6	2.5	231.56	94	82	65
	25	1030	6	2.5	235.78	95	83	66
	30	1035	–	–	240.010	–	–	–

ΔH = Mf * (Tm/Ts) * (ΔP)

Note: All temperatures are °R (°F+460)

Yc= (10/Vm)*((0.0319*(Tm))/Pb)^0.5

Mf = 846.72 * (Dn^4) * (ΔH@) * (Cp^2) * ((1-(Bws/100))^2) * (Md/Ms) * (Ps/Pm)

Mf = 846.72 * (_____) * (_____) * (_____) * (_____) * (_____) * (_____)

Mf = _____

Nozzle Determination:

ΔH@ / Kiso*(Cp)^2*(1-(Bws/100))^2*(Md/Ms)*(Ps/Pm)*(Tm/Ts)*$\Delta P_{(average)}$ = $\sqrt[4]{\text{\_\_\_\_\_}}$ Dn

(Recommend multiplying calculate nozzle size by 5%) Dn *1.05= _____

Pm = _____ Pbar + (ΔH@/13.6)

Ps = _____ Pbar + (Pstat/13.6)

Md = _____ 0.44(%CO_2)+0.32(%O_2)+0.28(%N_2+%CO)

Ms = _____ (Md)(1-(Bws/100))+18(Bws/100)

Bws = _____ (Vwc+Vwsg)/(Vwc+Vwsg+Vm)

Vwc = _____ 0.04706(Vf-Vi)

Vwsg = _____ 0.04715(Wf-Wi)

Derenzo and Associates, Inc.

USEPA Method 2
Gas Velocity Measurement Data Sheet

Company	Seminole	No. of Points	12
Source Designation	ICG #4 (Enviro-C)	Operator(s)	DW/RB
Test Date	3/22/12	Pitot Type	Type S or Standard
Test Number	Post 1 / Pre 2	Pitot Identification	5F
Time (24-hr clock)	1140	O_2 Content (%)	CEM Data
Barometric Press. (in. Hg)	30.26	CO_2 Content (%)	
Static Pressure (in. H_2O)	8.6	Wet Bulb Temp.	

Inches from Stack Wall	Traverse Point Number	Stack Temperature (°F)	Velocity Head (in. H_2O)	Null Angel (zero angle)
	1	962	3.50	
	2	963	3.70	
	3	964	4.0	
	4	967	3.95	
	5	962	4.30	
	6	959	4.30	
	1	964	3.80	
	2	967	3.85	
	3	966	3.9	
	4	966	3.7	
	5	959	3.85	
	6	957	4.25	

Stack / Duct Measurements

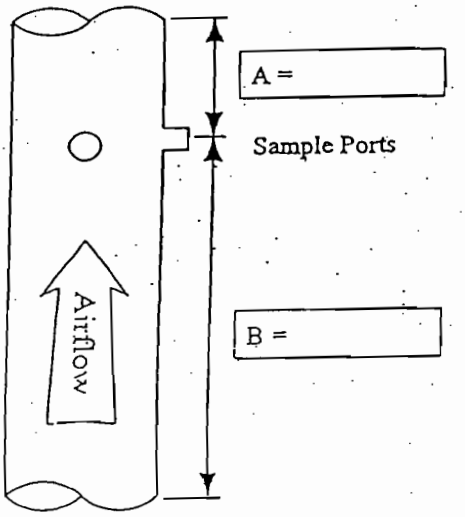

Round Duct Dia. (D) _____

Square Duct (LxW) _____ x _____

Square Duct Dia. (De): _____
De = 2LW / (L+W)

Straight Length: (diameters) A / D _____
B / D _____

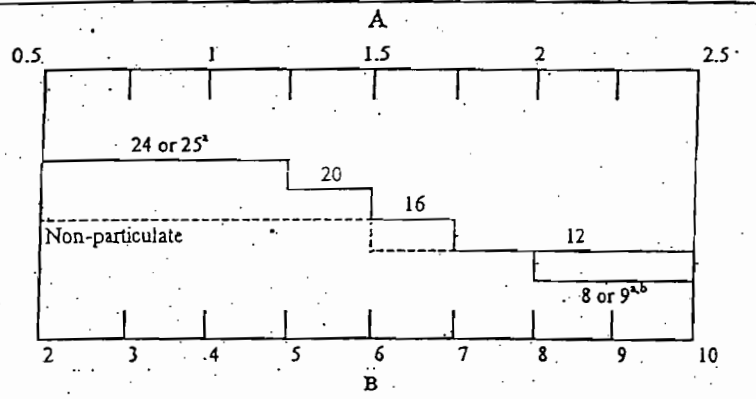

a- Higher No. for rectanguar stacks
b- For stacks between 12 and 24 in.

Traverse Point	No. of Traverse Points Per Dia. 6	8	10	12
1	4.4	3.2	2.6	2.1
2	14.6	10.5	8.2	6.7
3	29.6	19.4	14.6	11.8
4	70.4	32.3	22.6	17.7
5	85.4	67.7	34.2	25.0
6	95.6	80.6	65.8	35.6
7		89.5	77.4	64.4
8		96.8	85.4	75.0
9			91.8	82.3
10			97.4	88.2
11				93.3
12				97.9

Method 4 Isokinetic Field Sampling Data Sheet

Company	Seminole Energy				
Source Designation	ICE #4 (EU005)				
Test Date	3/22/12	Pitot Number	–	Leak Rate Init	0.004 @ 15"
Test Number	M-2	Meter Number	N-3	Leak Rate Fin	0.006 @ 4"
Operator	DW/MB	Kiso	1.661.932	Traverse points	–
Filter Numbers	–	Delta H@	1.897	Pitot Cp	0.84
Bar. Press (Pb)	30.26	Assumed H2O	11	Meter Yd Factor	0.9971
Static Press (Ps)		Cond.Vol. (Vlc-1)	72.5	Molecular Weight (%)	
Stack Dia (in.)	15.5	SG Gain (Vlc-2)	9.3	O_2	CEM
		Nozzle Dia (in.)	–	CO_2	Data

Impinger	Final Wt (ml / g)	Initial Wt (ml / g)	Net Gain (ml / g)
1st	673.1	610.8	62.3
2nd	708.8	696.0	12.8
3rd	602.6	600.2	2.4
Silica Gel	956.2	946.9	9.3

Traverse Point Number	Sampling Time (Min) ø	Sampling Time Time (24 hour)	Train Vacuum ("Hg)	Orifice Differential ("H2O) ΔH	Sample Vol (ft3) Vm	DGM Temp. Inlet (°F) Tm	DGM Temp. Outlet (°F) Tm	Last Imp. Temp. (°F)
centroid	0	1155	3	2.5	240.297	86	85	66
	5	1200	3	2.5	244.70	92	86	67
	10	1205	3	2.5	248.97	97	87	66
	15	1210	3	2.5	253.26	100	88	67
	20	1215	3	2.5	257.57	102	88	68
	25	1220	3	2.5	261.84	103	90	67
~~Cent~~	30	1225	–	–	266.135	–	–	–

ΔH = Mf * (Tm/Ts) * (ΔP)

Note: All temperatures are °R (°F+460)

Yc= (10/Vm)*((0.0319*(Tm))/Pb)^0.5

Mf = 846.72 * (Dn^4) * (ΔH@) * (Cp^2) * ((1-(Bws/100))^2) * (Md/Ms) * (Ps/Pm)

Mf = 846.72 * (_____) * (_____) * (_____) * (_____) * (_____) * (_____)

Mf = _____

Nozzle Determination:

ΔH@ / Kiso*(Cp)^2*(1-(Bws/100))^2*(Md/Ms)*(Ps/Pm)*(Tm/Ts)*$\Delta P_{(average)}$ = $\sqrt[4]{Dn}$

(Recommend multiplying calculate nozzle size by 5%) Dn *1.05= _____

Pm = _____ Pbar + (ΔH@/13.6)

Ps = _____ Pbar + (Pstat/13.6)

Md = _____ 0.44(%CO_2)+0.32(%O_2)+0.28(%N_2+%CO)

Ms = _____ (Md)(1-(Bws/100))+18(Bws/100)

Bws = _____ (Vwc+Vwsg)/(Vwc+Vwsg+Vm)

Vwc = _____ 0.04706(Vf-Vi)

Vwsg = _____ 0.04715(Wf-Wi)

Derenzo and Associates, Inc.

USEPA Method 2
Gas Velocity Measurement Data Sheet

Company	Seminole Energy	No. of Points	12
Source Designation	ICE #4 (EU005)	Operator(s)	DW/RB
Test Date	3/22/12	Pitot Type	Type S or Standard
Test Number	Post 2/Pre 3	Pitot Identification	SP
Time (24-hr clock)	1322	O_2 Content (%)	
Barometric Press. (in. Hg)	30.26	CO_2 Content (%)	
Static Pressure (in. H_2O)	8.7	Wet Bulb Temp.	

Inches from Stack Wall	Traverse Point Number	Stack Temperature (°F)	Velocity Head (in. H_2O)	Null Angel (zero angle)
	1	954	3.50	
	2	959	3.80	
	3	960	4.05	
	4	964	3.95	
	5	956	4.10	
	6	952	4.05	
	1	959	3.80	
	2	962	4.05	
	3	964	4.10	
	4	964	4.10	
	5	957	4.0	
	6	952	3.8	

Stack / Duct Measurements

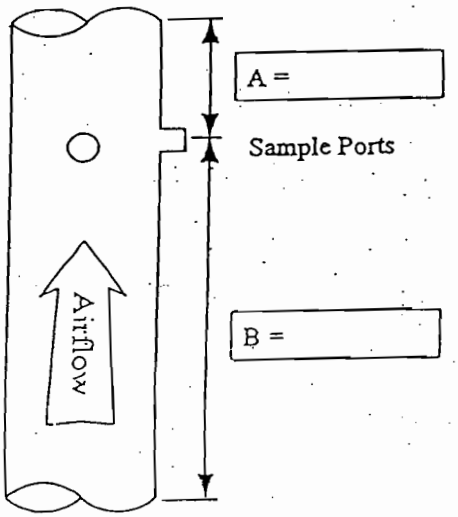

Round Duct Dia. (D) _____

Square Duct (LxW) _____ x _____

Square Duct Dia. (De): _____
De = 2LW / (L+W)

Straight Length: (diameters) A / D _____
B / D _____

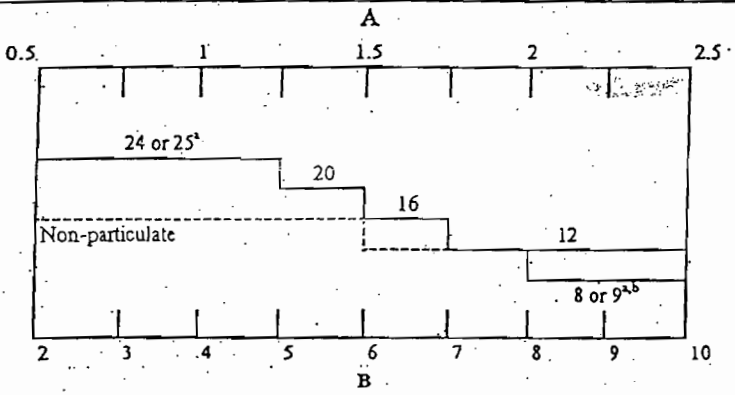

a- Higher No. for rectanguar stacks
b- For stacks between 12 and 24 in.

Traverse Point	No. of Traverse Points Per Dia. 6	8	10	12
1	4.4	3.2	2.6	2.1
2	14.6	10.5	8.2	6.7
3	29.6	19.4	14.6	11.8
4	70.4	32.3	22.6	17.7
5	85.4	67.7	34.2	25.0
6	95.6	80.6	65.8	35.6
7		89.5	77.4	64.4
8		96.8	85.4	75.0
9			91.8	82.3
10			97.4	88.2
11				93.3
12				97.9

Method 4 Isokinetic Field Sampling Data Sheet.

Company	Seminole Energy				
Source Designation	ICE #4				
Test Date	3/22/12	Pitot Number	–	Leak Rate Init	0.000@15"
Test Number	M-3	Meter Number	N-3	Leak Rate Fin.	0.000 @7"
Operator	DW/MB	Kiso	1661.932	Traverse points	–
Filter Numbers	–	Delta H@	1.897	Pitot Cp	0.84
Bar. Press (Pb)	30.26	Assumed H2O	11	Meter Yd Factor	0.9971
Static Press (Ps)		Cond.Vol. (Vlc-1)	71.9	Molecular Weight (%)	
Stack Dia (in.)	15.5	SG Gain (Vlc-2)	5.8	O_2	Cem
		Nozzle Dia (in.)	–	CO_2	Data

Impinger	Final Wt (ml / g)	Initial Wt (ml / g)	Net Gain (ml / g)
1st	754.7	691.2	63.5
2nd	698.8	691.9	6.9
3rd	619.2	617.7	1.5
Silica Gel	869.2	863.4	5.8

Traverse Point Number	Sampling Time (Min) ø	Time (24 hour)	Train Vacuum ("Hg)	Orifice Differential ("H2O) ΔH	Sample Vol (ft3) Vm	DGM Temp. Inlet (°F) Tm	DGM Temp. Outlet (°F) Tm	Last Imp. Temp. (°F)
Centroid	0	13:53	6	2.5	266.463	89	88	63
	5	13:58	6	2.5	270.81	94	89	63
	10	14:03	6	2.5	275.12	98	89	60
	15	14:08	6	2.5	279.41	101	90	62
	20	14:13	6	2.5	283.69	103	91	64
	25	14:18	6	2.5	287.96	104	91	65
	30	14:23	–	–	292.250	–	–	–

ΔH = Mf * (Tm/Ts) * (ΔP)

Note: All temperatures are °R (°F+460)

Yc= (10/Vm)*((0.0319*(Tm))/Pb)^0.5

Mf = 846.72 * (Dn^4) * (ΔH@) * (Cp^2) * ((1-(Bws/100))^2) * (Md/Ms) * (Ps/Pm)

Mf = 846.72 * (_____) * (_____) * (_____) * (_____) * (_____) * (_____)

Mf = _____

Nozzle Determination:

ΔH@ / Kiso*(Cp)^2*(1-(Bws/100))^2*(Md/Ms)*(Ps/Pm)*(Tm/Ts)*$\Delta P_{(average)}$ = $\sqrt[4]{\text{Dn}}$

(Recommend multiplying calculate nozzle size by 5%) Dn *1.05= _____

Pm = _____ Pbar + (ΔH@/13.6)

Ps = _____ Pbar + (Pstat/13.6)

Md = _____ 0.44(%CO_2)+0.32(%O_2)+0.28(%N_2+%CO)

Ms = _____ (Md)(1-(Bws/100))+18(Bws/100)

Bws = _____ (Vwc+Vwsg)/(Vwc+Vwsg+Vm)

Vwc = _____ 0.04706(Vf-Vi)

Vwsg = _____ 0.04715(Wf-Wi)

Derenzo and Associates, Inc.

USEPA Method 2
Gas Velocity Measurement Data Sheet

Company	Seminole Energy	No. of Points	12
Source Designation	ICE#4 (EU005)	Operator(s)	DW/RB
Test Date	3/22/12	Pitot Type	Type S or Standard
Test Number	Post 3	Pitot Identification	5F
Time (24-hr clock)	1445	O_2 Content (%)	
Barometric Press. (in. Hg)	30.26	CO_2 Content (%)	
Static Pressure (in. H_2O)	8.9	Wet Bulb Temp.	

Inches from Stack Wall	Traverse Point Number	Stack Temperature (°F)	Velocity Head (in. H_2O)	Null Angel (zero angle)
	1	963	3.60	
	2	965	3.75	
	3	964	3.90	
	4	965	3.85	
	5	960	3.90	
	6	952	4.10	
	1	958	3.70	
	2	962	3.95	
	3	963	4.05	
	4	967	4.00	
	5	959	3.90	
	6	953	4.00	

Stack / Duct Measurements

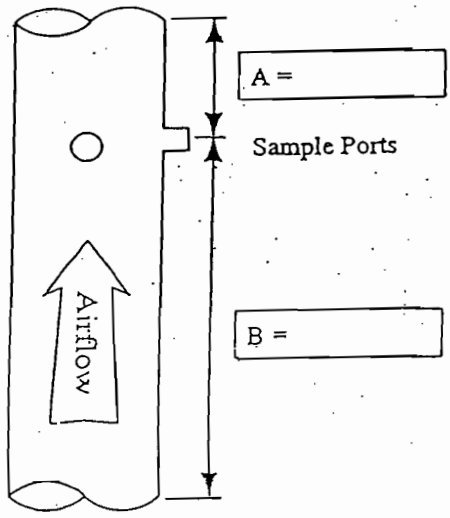

Round Duct Dia. (D) _____

Square Duct (LxW) _____ x _____

Square Duct Dia. (De): _____
De = 2LW / (L+W)

Straight Length: (diameters) A / D _____
B / D _____

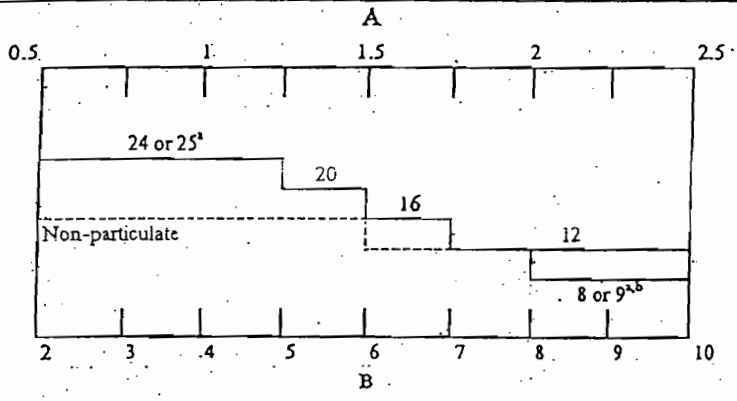

a- Higher No. for rectanguar stacks
b- For stacks between 12 and 24 in.

Traverse Point	No. of Traverse Points Per Dia. 6	8	10	12
1	4.4	3.2	2.6	2.1
2	14.6	10.5	8.2	6.7
3	29.6	19.4	14.6	11.8
4	70.4	32.3	22.6	17.7
5	85.4	67.7	34.2	25.0
6	95.6	80.6	65.8	35.6
7		89.5	77.4	64.4
8		96.8	85.4	75.0
9			91.8	82.3
10			97.4	88.2
11				93.3
12				97.9

Derenzo and Associates, Inc.

Visible Emission Observation Form

Method Used			
(Method 9)	203a	203b	other:

Obsv. Date	page	of
3/22/12	1	1

Company Name LGS		
Facility Name SEMINOLE ENERGY		
Street Address		
City GENEVA	State FL	Zip 32732

Process Unit	Unit	Op. Mode 100%
Control Equipment		Op. Mode

Describe Emission Point ICE #4 (EU005) EXHAUST	
height of em. pt. start 25' end	height relative to obsv. start 25' end
distance to em. pt. start 300' end	direction to em. pt. (deg) start 316° end

vertical angle to obsv. pt. start end	direction to obsv. start SE end
distance and direction to em pt to obsv pt start 300' NW end	

Describe emissions start end	
emission color start end	water droplet plume (circle) attached detached (none)

Describe plume background start SKY end	
background color start BLUE/WHT end	sky conditions start SCATTERED end
wind speed start 5-10MPH end	wind directions start end
ambient temp start 70° end	wet bulb relative humidity

Source layout sketch

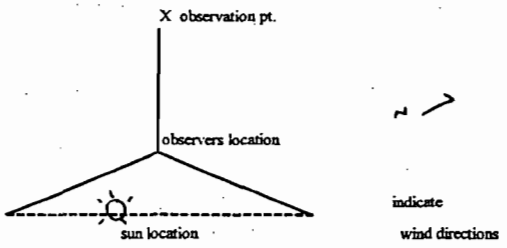

longitude 81° 05' 20" W	
latitude 28° 47' 25" N	

additional information	

	start 9:59				end 10:59			
	seconds					seconds		
min	0	15	30	45	min	0	15	30	45
0	0	0	0	0	30	0	0	0	0
1	0	0	0	0	31	0	0	0	0
2	0	0	0	0	32	0	0	0	0
3	0	0	0	0	33	0	0	0	0
4	0	0	0	0	34	0	0	0	0
5	0	0	0	0	35	0	0	0	0
6	0	0	0	0	36	0	0	0	0
7	0	0	0	0	37	0	0	0	0
8	0	0	0	0	38	0	0	0	0
9	0	0	0	0	39	0	0	0	0
10	0	0	0	0	40	0	0	0	0
11	0	0	0	0	41	0	0	0	0
12	0	0	0	0	42	0	0	0	0
13	0	0	0	0	43	0	0	0	0
14	0	0	0	0	44	0	0	0	0
15	0	0	0	0	45	0	0	0	0
16	0	0	0	0	46	0	0	0	0
17	0	0	0	0	47	0	0	0	0
18	0	0	0	0	48	0	0	0	0
19	0	0	0	0	49	0	0	0	0
20	0	0	0	0	50	0	0	0	0
21	0	0	0	0	51	0	0	0	0
22	0	0	0	0	52	0	0	0	0
23	0	0	0	0	53	0	0	0	0
24	0	0	0	0	54	0	0	0	0
25	0	0	0	0	55	0	0	0	0
26	0	0	0	0	56	0	0	0	0
27	0	0	0	0	57	0	0	0	0
28	0	0	0	0	58	0	0	0	0
29	0	0	0	0	59	0	0	0	0

Comments

Observer's name ROBERT BINGHAM	date 3/22/12
Observer's signature	
organization name DERENZO & ASSOCIATES	
certified by EPA	date 10/6/11

BEST AVAILABLE COPY

CEM CALIBRATION SUMMARY

Company: Bemina Energy
Location: Geneva, FL
Source Designation: ICE#4 (EU005)
Date: 3/21/12
Operator(s): MB

Cylinder ID	Analyte	Concentration	Unit
	O_2	20.95	%
	O_2	12.55	%

Pre 1: Run High, Mid, Low, Zero, for CH_4, NMOC, THC
Run High, Mid, Zero, for NO_X, O_2, CO, CO_2, SO_2

	Time	Procedure	Response (ppm)	Exp. Value (ppm)	Notes
	—	M-205	—	—	—
Test 1	1131	Just O_2 Hi	20.98	20.95	
Start Time:	1135	Mid	12.52	12.57	
	1138	Low	8.34	8.38	
Stop Time:	1142	Zero	0.01	0.0	
	1148	Hi	21.00	20.95	
	1153	Mid	12.53	12.57	
	1157	Low	8.34	8.38	
	1201	Zero	0.01	0.0	
	1206	Hi	20.97	20.95	
	1211	Mid	12.52	12.57	
	1215	Low	8.34	8.38	
	1220	Zero	0.00	0.0	
	1225	Mid level	12.57	12.55	
	1229	Zero	0.01	0.0	
	1234	Mid	12.59	12.55	
Test 2	1238	Zero	0.0	0.0	
Start Time:	1243	Mid	12.61	12.55	
	1247	Zero	0.01	0.0	
Stop Time:					
Test 3					
Start Time:					
Stop Time:					

Calibration Error $=(C_{dir} - C_v)/CS \times 100$ (must be $\leq 2\%$)

Initial System Bias (SB) $= (C_s - C_{dir})/CS * 100$ (must be $\leq 5\%$)

Calibration Drift $=(SB_f - SBi)$ (must be $\leq 3\%$)

Cdir = Concentration direct instrument reading
Cv = Concentration value
Cs = Concentration of system
CS = Calibration Span
SBf = System Bias final
SBi = System Bias initial

CEM CALIBRATION SUMMARY

Company: Seminole Energy
Location: Gunnison, FL
Source Designation: ICE#4 (EU005) Exhaust
Date: 3/23/12
Operator(s): MB
30.26 Pb

Pre 1: Run High, Mid, Low, Zero, for CH_4, NMOC, THC
Run High, Mid, Zero, for NO_X, O_2, CO, CO_2, SO_2

Cylinder ID	Analyte	Concentration	Unit
	NOx	198.3	ppm
	CO	980.4	ppm
	CO2	22.83	%
	O2	20.95	%
	VOC	85.46	ppm
	NO2	49.17	ppm

	Time	Procedure	Response (ppm)	Exp. Value (ppm)	Notes			
	814	NOx Inst Hi	199.34	198.3				
Test 1	817	Mid	78.63	79.32	40%			
Start Time: 955	809	Zero	0.46	0.0				
	820	CO Inst Hi	981.03	980.4				
Stop Time: 1055	823	Mid	782.92	784.32	80%			
	816	Zero	0.02	0.0				
NOx - 66.854	827	CO2 Inst Hi	22.85	22.83				
CO - 594.386	830	Mid	13.65	13.70	60%			
	816	Zero	0.0	0.0				
CO2 - 11.866	804	O2 Inst Hi	21.00	20.95				
O2 - 7.323	810	Mid	8.35	8.38	40%			
VOC - 34.481	759	Zero	0.01	0.0		start	Stop	Net
	900	NOx SB upscale	78.62	78.63	40%	85635	85830	115
	905	down	0.95	0.46		90135	90330	115
	906	CO SB upscale	780.69	782.92	80%	90135	90245	70
	913	down	0.61	0.02		90930	91037	67
Test 2	914	CO2 SB upscale	13.50	13.65	60%	90930	91045	75
Start Time: 1145	922	down	0.02	0.0		91500	91615	75
	920	O2 SB upscale	8.36	8.35	40%	91500	91635	95
Stop Time: 1245	925	down	0.01	0.01		92100	92252	112
	931	VOC SB Hi	83.80	85.46		92625	92915	170
NOx - 68.654	941	Mid	51.29	~~50.71~~	50.43			
CO - 594.205	945	Low	34.47	~~33.49~~	33.75			
	920	Zero	0.38	0.0				
CO2 - 11.923	–	Post Test 1	–	–	–	–	–	–
	1115	NOx SB upscale	78.11	78.63				
O2 - 7.344	1110	down	0.96	0.46				
	1120	CO SB up	781.72	782.92				
VOC - 34.427	1109	down	-0.04	0.02				
	1126	CO2 SB up	13.46	13.65				
	1115	down	0.01	0.0				
	1131	O2 SB up	8.35	8.35				
Test 3	1120	down	0.01	0.01				
Start Time: 1345	1112	VOC SB Mid	34.47	~~32.29~~	34.47	40%		
	1120	Zero	0.38	0.38				
Stop Time: 1445	835-849	NOx Converter	50.71	49.17				
NOx - 69.223	852	NOx Inst Mid	79.27	78.63				
CO - 593.368	849	Zero	0.97	0.46				
CO2 - 11.886								
O2 - 7.361		Next Page						
VOC - 34.446								

Calibration Error $=(C_{dir} - C_v)/CS \times 100$ (must be $\leq 2\%$)

Initial System Bias (SB) $= (C_s - C_{dir})/CS * 100$ (must be $\leq 5\%$)

Calibration Drift $=(SB_f - SBi)$ (must be $\leq 3\%$)

Cdir = Concentration direct instrument reading
Cv = Concentration value
Cs = Concentration of system
CS = Calibration Span
SBf = System Bias final
SBi = System Bias initial

CEM CALIBRATION SUMMARY

Company: Seminole Energy
Location: Geneva FL
Source Designation: ICEH4 (EU005)
Date: 3/22/12
Operator(s): MB

Cylinder ID	Analyte	Concentration	Unit

Pre 1: Run High, Mid, Low, Zero, for CH_4, NMOC, THC
Run High, Mid, Zero, for NO_X, O_2, CO, CO_2, SO_2

	Time	Procedure	Response (ppm)	Exp. Value (ppm)	Notes
	–	Post Test 2	–	–	– – –
Test 1	1323	NOx SB upscale	77.59	78.63	40%
Start Time:	1309	down	0.95	0.46	
	1318	CO SB up	785.02	782.92	80%
Stop Time:	1308	down	1.87	0.02	
	1315	CO2 SB up	13.50	13.65	60%
	1308	down	0.02	0.0	
	1309	O2 SB up	8.35	8.35	40%
	1304	down	0.01	0.01	
	1300	VOC SB Mid	34.28	34.47	40%
	1255	Zero	0.40	0.38	
	–	Post Test 3	–	–	– – –
	1555	NOx SB upscale	77.29	78.63	
	1543	down	0.43	0.46	
	1552	CO SB up	783.3	782.92	
	1542	down	1.83	0.02	
Test 2	1542	CO2 SB up	13.50	13.65	
Start Time:	1508	down	0.01	0.0	
	1523	O2 SB up	8.35	8.35	
Stop Time:	1517	down	0.01	0.01	Actual / Expected
1508	~~1300~~	VOC SB Mid	~~34.28~~	~~34.47~~ →	32.67 / 34.28
1503	~~1255~~	Zero	~~0.40~~	~~0.38~~ →	0.38 / 0.40
Test 3					
Start Time:					
Stop Time:					

Calibration Error $=(C_{dir} - C_v)/CS \times 100$ (must be $\leq 2\%$)

Initial System Bias (SB) $= (C_s - C_{dir})/CS * 100$ (must be $\leq 5\%$)

Calibration Drift $=(SB_f - SBi)$ (must be $\leq 3\%$)

Cdir = Concentration direct instrument reading
Cv = Concentration value
Cs = Concentration of system
CS = Calibration Span
SBf = System Bias final
SBi = System Bias initial

DERENZO AND ASSOCIATES, INC.
USEPA METHOD 3C/25C
FIELD SAMPLING DATA SHEET

Job #: 1201046

Facility: Seminole Energy

Location: Geneva, FL

Date: 3/22/12

Operator: DW/MB

Control Device: N/A

Sample Location: GC Inlet

Ambient Temperature: 79

Barometric Pressure: 30.26

Contract Laboratory: Air Toxics

SAMPLE 1

Tank #: 34747

Initial Vacuum: 26

Final Vacuum: 4.0

TIME	VACUUM ("Hg)
9:57	26
10:02	24
10:12	19
10:19	14
10:28	11
10:34	9
10:39	7
10:49	4.5
10:51	4.0

Leak Rate Pre:

Leak Rate Post:

SAMPLE 2

Tank #: 32106

Initial Vacuum: 26.5

Final Vacuum: 3.5

TIME	VACUUM ("Hg)
11:50	26.5
12:00	20.5
12:05	17.5
12:10	14.5
12:20	10.0
12:30	6.5
12:35	4
12:39	3.5

Leak Rate Pre:

Leak Rate Post:

SAMPLE 3

Tank #: 31433

Initial Vacuum: 26

Final Vacuum: 3.0

TIME	VACUUM ("Hg)
1350	26
1400	22
14:10	16.5
14:20	12.5
14:30	7.5
14:40	4.5
1445	3.0

Leak Rate Pre:

Leak Rate Post:

APPENDIX B

EQUIPMENT CALIBRATION DATA
AND
OPACITY CERTIFICATION

METHOD 5 DRY GAS METER CALIBRATION USING CRITICAL ORIFICES

DERENZO & ASSOCIATES, INC

1) Select three critical orifices to calibrate the dry gas meter which bracket the expected operating range.
2) Record barometric pressure before and after calibration procedure.
3) Run at maximum attainable vacuum (open coarse valve, close fine valve), for period of 5 minutes minimum for large orifice up to 10 minutes for smallest orifice.
4) Record readings in outlined boxes below, other columns are automatically calculated.

DATE: 03/05/12

METER PART #: N3

METER SERIAL #: N3

CRITICAL ORIFICE SET SERIAL #: 1318

	INITIAL	FINAL	AVG (P_{bar})
BAROMETRIC PRESSURE (In Hg):	29.58	29.60	29.58

IF Y VARIATION EXCEEDS 2.00%, ORIFICE SHOULD BE RECALIBRATED

ORIFICE #	RUN #	K' FACTOR (AVG)	TESTED VACUUM (In Hg)	DGM READINGS (FT^3) INITIAL	DGM READINGS (FT^3) FINAL	DGM READINGS (FT^3) NET (V_m)	TEMPERATURES °F AMBIENT	DGM INLET INITIAL	DGM INLET FINAL	DGM OUTLET INITIAL	DGM OUTLET FINAL	DGM AVG	ELAPSED TIME (MIN) θ	DGM ΔH (In H_2O)	(1) V_m (STD)	(2) V_{cr} (STD)	(3) Y	Y VARIATION (%)
#29	1	0.7968	18	31.063	36.24	5.177	67	78	78	67	68	72.25	5.00	3.6	5.1237	5.1350	1.0022	
Brass	2	0.7968	18	36.24	41.43	5.190	67	78	78	68	68	73	5.00	3.6	5.1293	5.1350	1.0011	
	3	0.7968	18	41.43	46.632	5.202	67	78	78	68	69	73.25	5.00	3.6	5.1388	5.1350	0.9993	
																AVG =	1.0009	0.38
#24	1	0.6534	19.5	46.632	55.25	8.618	68	77	76	69	69	72.75	10.00	2.4	8.4960	8.4137	0.9903	
Brass	2	0.6534	19.5	55.25	63.86	8.610	68	76	76	69	70	72.75	10.00	2.4	8.4881	8.4137	0.9912	
	3	0.6534	19.5	63.86	72.516	8.656	68	76	73	70	70	72.25	10.00	2.4	8.5415	8.4137	0.9850	
																AVG =	0.9889	-0.83
#20	1	0.5333	21	72.516	79.5	6.984	69	77	77	72	72	74.5	10.00	1.6	6.8490	6.8607	1.0017	
Brass	2	0.5333	21	79.5	86.48	8.980	68	77	77	72	72	74.5	10.00	1.6	8.8451	8.8672	1.0032	
	3	0.5333	21	86.48	93.488	7.008	68	77	77	72	73	74.75	10.00	1.6	6.8694	6.8672	0.9997	
																AVG =	1.0015	0.45

USING THE CRITICAL ORIFICES AS CALIBRATION STANDARDS:
The following equations are used to calculate the standard volumes of air passed through the DGM, V_m (std), and the critical orifice, V_{cr} (std), and the DGM calibration factor, Y. These equations are automatically calculated in the spreadsheet above.

AVERAGE DRY GAS METER CALIBRATION FACTOR, Y = 0.9971

Y-5%= 0.947 1.047

Delta H@ 1.897

Kiso 1661.932

(1) $V_m\,(std) = K_1\, V_m \dfrac{P_{bar} + (\Delta H/13.6)}{T_m}$ = Net volume of gas sample passed through DGM, corrected to standard conditions

K_1 = 17.64 °R/in. Hg (English), 0.3858 °K/mm Hg (Metric)

T_m = Absolute DGM avg. temperature (°R - English, °K - Metric)

(2) $V_{cr}\,(std) = K' \sqrt{\dfrac{P_{bar}\,\theta}{T_{amb}}}$ = Volume of gas sample passed through the critical orifice, corrected to standard conditions

T_{amb} = Absolute ambient temperature (°R - English, °K - Metric)

K' = Average K' factor from Critical Orifice Calibration

(3) $Y = \dfrac{V_{cr}\,(std)}{V_m\,(std)}$ = DGM calibration factor

PYROMETER CALIBRATION

Meter	32	99	251	499	1003	1502
Omega	32	100	250	500	1000	1500
% Differencs	0.0	-1.0	0.4	-0.2	0.3	0.1

METHOD 5 DRY GAS METER CALIBRATION USING CRITICAL ORIFICES

DERENZO & ASSOCIATES, INC

1) Select three critical orifices to calibrate the dry gas meter which bracket the expected operating range.
2) Record barometric pressure before and after calibration procedure.
3) Run at maximum attainable vacuum (open coarse valve, close fine valve), for period of 5 minutes minimum for large orifice up to 10 minutes for smallest orifice.
4) Record readings in outlined boxes below, other columns are automatically calculated.

DATE: 4/4/12 | METER SERIAL #: N3 | BAROMETRIC PRESSURE (In Hg): INITIAL 29.28 | FINAL 29.25 | AVG (P_{bar}) 29.27

METER PART #: N3 | CRITICAL ORIFICE SET SERIAL #: 1318

IF Y VARIATION EXCEEDS 2.00%, ORIFICE SHOULD BE RECALIBRATED

ORIFICE #	RUN #	K' FACTOR (AVG)	TESTED VACUUM (In Hg)	DGM READINGS (FT^3) INITIAL	DGM READINGS (FT^3) FINAL	DGM READINGS (FT^3) NET (V_m)	TEMPERATURES °F AMBIENT	DGM INLET INITIAL	DGM INLET FINAL	DGM OUTLET INITIAL	DGM OUTLET FINAL	DGM AVG	ELAPSED TIME (MIN) θ	DGM ΔH (In H_2O)	(1) V_m (STD)	(2) V_{cr} (STD)	(3) Y	Y VARIATION (%)
#29	1	0.7968	18	523.655	528.83	5.175	63	76	77	65	66	71	5.00	3.6	5.0796	5.0997	1.0040	
Brass	2	0.7968	18	528.83	534.	5.170	63	77	77	66	66	71.5	5.00	3.6	5.0699	5.0997	1.0059	
	3	0.7968	18	534.	539.165	5.165	64	77	77	66	67	71.75	5.00	3.6	5.0626	5.0948	1.0064	
																AVG =	1.0054	0.37
#24	1	0.6534	19.5	539.165	547.75	8.585	64	77	76	67	68	72	10.00	2.4	8.3857	8.3558	0.9964	
Brass	2	0.6534	19.5	547.75	556.35	8.600	64	76	75	68	69	72	10.00	2.4	8.4004	8.3558	0.9947	
	3	0.6534	19.5	556.35	564.973	8.623	65	75	76	69	70	72.5	10.00	2.4	8.4149	8.3479	0.9920	
																AVG =	0.9944	-0.73
#20	1	0.5333	21	564.973	571.93	6.957	66	76	75	70	70	72.75	10.00	1.6	6.7724	6.8070	1.0051	
Brass	2	0.5333	21	571.93	578.88	6.950	65	75	75	70	71	72.75	10.00	1.6	6.7656	6.8135	1.0071	
	3	0.5333	21	578.88	585.848	6.966	66	75	75	71	71	73	10.00	1.6	6.7799	6.8070	1.0040	
																AVG =	1.0054	0.37

USING THE CRITICAL ORIFICES AS CALIBRATION STANDARDS:
The following equations are used to calculate the standard volumes of air passed through the DGM, V_m (std), and the critical orifice, V_{cr} (std), and the DGM calibration factor, Y. These equations are automatically calculated in the spreadsheet above.

AVERAGE DRY GAS METER CALIBRATION FACTOR, Y = 1.0017

Y-5%= 0.952 | 1.052
Delta H@ 1.910
Kiso 1694.554

(1) $V_m\,(std) = K_1\, V_m \dfrac{P_{bar} + (\Delta H/13.6)}{T_m}$ = Net volume of gas sample passed through DGM, corrected to standard conditions
K_1 = 17.64 °R/in. Hg (English), 0.3858 °K/mm Hg (Metric)
T_m = Absolute DGM avg. temperature (°R - English, °K - Metric)

(2) $V_{cr}\,(std) = K' \sqrt{\dfrac{P_{bar}\,\theta}{T_{amb}}}$ = Volume of gas sample passed through the critical orifice, corrected to standard conditions
T_{amb} = Absolute ambient temperature (°R - English, °K - Metric)
K' = Average K' factor from Critical Orifice Calibration

(3) $Y = \dfrac{V_{cr}\,(std)}{V_m\,(std)}$ = DGM calibration factor

PYROMETER CALIBRATION

Meter	32	99	252	500	1004	1503
Omega	32	100	250	500	1000	1500
% Difference	0.0	-1.0	0.8	0.0	0.4	0.2

Horiba Instruments
5900 Hines Drive
Ann Arbor, MI 48108

Certificate of Calibration

Certificate Number: 2011197-122811

The calibration was performed using reference standards which have traceability to the International System of Units (SI) through the United States National Institute of Standards and Technology (NIST). This calibration is accredited and meets the requirements of ISO-17025:2005 as verified by ACLASS. Refer to certificate and scope of accreditation (Certificate #ACT-1312).The calibration was performed using the procedure number stated below.

Customer: Derenzo & Associates, Inc.
Customer Address: 39395 Schoolcraft
Livonia, MI 48150-5036

Manufacturer: STEC
Description: Gas Divider
Condition Received: Passed
Cal Procedure: WI-QM-B-010
Date Calibrated: 12/28/11
Calibration Gas: Zero N_2

Part Number: SGD-SC-5L
Serial Number: 2011197
Condition Returned: Passed
Uncertainty: +/- 0.0481 L/min
Recomm. Recalibration Due: 12/28/12
Lot Number: 32-400025828-1

Standards Traceability

Mfr./Model Number	Serial #	Test Number	Cal. Date	Due Date
DHI/3E5	1015	LAB144B	4/27/11	4/27/12
DHI/3E5	1016	LAB144B	4/27/11	4/27/12
DHI/Molbox 1A	448	LAB145B	4/22/11	4/22/12

Service Technician: Barry A. Fife **Date:** 12/28/11

QA Manager: Don Flumi **Date:** 12/28/11

This certificate/report may not be reproduced, except in full, without the written approval of Horiba. The calibrated system is operating within the specification. The recommended calibration cycle implies system usage in normal, non extreme, environmental conditions. The uncertainty is calculated at a 95% confidence interval with a coverage factor of k=2.
This certificate is issued under the authority of: Horiba Instruments, 2890 John R Road, Troy, MI 48083.

SGD-A10, SGD-710, SGD-SC-5L GAS DIVIDERS VERIFICATION CHECK SHEET

As Found Data

CUSTOMER: Derenzo DATE: 12/28/11

MODEL: SGD-SC-5L SERIAL NUMBER: 2011197

CUT PT.	COMP A MIXTURE GAS	COMP B DILUTANT GAS	TOTAL FLOW POINT	MIXTURE FLOW %	%POINT ERROR >2.0%	STATUS
0	0.0000	3.9991	3.9991	0.000	0.000	Pass
20	0.8019	3.2014	4.0033	20.031	-0.155	Pass
40	1.5970	2.4032	4.0002	39.923	0.193	Pass
60	2.3960	1.6050	4.0010	59.885	0.192	Pass
80	3.1940	0.8028	3.9968	79.914	0.108	Pass
100	3.9924	0.0000	3.9924	100.000	0.000	Pass

STD. DEV. 0.0038 LPM

MIXTURE GAS INLET PRESSURE TO DIVIDER: 21.0 PSIG
(At 100% CUTPOINT)

DILUTION GAS INLET PRESSURE TO DIVIDER: 17.0 PSIG
(AT 0.0% CUTPOINT)

OUTLET FLOW FROM GAS DIVIDER: 4.00 LPM

Method 7E Interference Response Verification

Date: 7/26/2006
Analyzer: Thermo Model 42c

Tested Calibration Span: 44.0 ppm

Test Gas Type	*Concentration (ppm)*	*Analyzer Response*[1]	*Deviation from Expected Response (ppm)*
CO_2/NO_x	1.72% / 26.4	26.20	0.20
CO_2	4.29%	-0.10	0.10
O_2/NO_x	8.36% / 26.4	26.27	0.13
O_2	20.9%	0.00	0.00
CO/NO_x	23.88 / 26.4	26.40	0.00
CO	59.70	-0.11	0.11
CH_4/NO_x	33.6 / 26.4	26.10	0.30
CH_4	84.0	-0.11	0.11
SO_2/NO_x	8.16 / 26.4	26.20	0.20
SO_2	20.4	-0.10	0.10
C_3H_8/NO_x	33.32 / 26.4	26.34	0.06
C_3H_8	83.3	-0.11	0.11
		Total Deviation (ppm)[2]	1.05
		% of Calibration Span[3]	2.38

1 - Measured concentrations were corrected for system bias.
2 - In summing the total deviation use the larger of the absolute values obtained for the interferent tested with and without the pollutant present.
3 - Total Interference must be less than 2.50% of the calibration span.

Method 7E Interference Response Verification

Date: 7/26/2006
Analyzer: Fuji ZRF CO Cell

Tested Calibration Span: 298.8 ppm

Test Gas Type	*Concentration (ppm)*	*Analyzer Response* [1]	*Deviation from Expected Response (ppm)*
CO_2/CO	1.72% / 179.3	179.1	0.20
CO_2	1.72%	0.06	0.06
O_2/CO	8.36% / 179.3	180.6	1.37
O_2	20.9%	-0.09	0.09
NO_x/CO	26.4 / 179.3	179.3	0.02
NO_x	44.0	-0.10	0.10
CH_4/CO	33.6 / 179.3	180.6	1.28
CH_4	84.0	-0.01	0.01
SO_2/CO	8.16 / 179.3	179.08	0.20
SO_2	20.4	1.29	1.29
C_3H_8/CO	33.32 / 179.3	179.42	0.14
C_3H_8	83.3	0.02	0.02
		Total Deviation (ppm)[2]	4.38
		% of Calibration Span[3]	1.46

1 - Measured concentrations were corrected for system bias.
2 - In summing the total deviation use the larger of the absolute values obtained for the interferent tested with and without the pollutant present.
3 - Total Interference must be less than 2.50% of the calibration span.

Method 7E Interference Response Verification

Date: 7/26/2006

Analyzer: Fuji ZRF CO_2 Cell

Tested Calibration Span: 4.29 %

Test Gas Type	*Concentration (ppm)*	*Analyzer Response*[1]	*Deviation from Expected Response (ppm)*
NO_x/CO_2	26.4 / 1.72%	1.72	0.01
NO_x	44.0	0.00	0.00
O_2/CO_2	8.36% / 1.72%	1.73	0.02
O_2	20.9%	0.00	0.00
CO/CO_2	23.88 / 2.57%	2.57	0.00
CO	59.70	0.00	0.00
CH_4/CO_2	33.6 / 2.57%	2.57	0.00
CH_4	84.0	0.00	0.00
C_3H_8/CO_2	33.32 / 2.57	2.57	0.00
C_3H_8	83.3	0.00	0.00
		Total Deviation (ppm)[2]	0.03
		% of Calibration Span[3]	0.59

1 - Measured concentrations were corrected for system bias.

2 - In summing the total deviation use the larger of the absolute values obtained for the interferent tested with and without the pollutant present.

3 - Total Interference must be less than 2.50% of the calibration span.

Method 7E Interference Response Verification

Date: 7/26/2006

Analyzer: Fuji ZFK3 O_2 Cell

Tested Calibration Span: 20.9 %

Test Gas Type	*Concentration (ppm)*	*Analyzer Response*[1]	*Deviation from Expected Response (ppm)*
CO_2/O_2	1.72% / 12.54%	12.62	0.08
CO_2	4.29%	0.00	0.00
NO_x/O_2	26.4 / 8.36%	8.41	0.05
NO_x	44.0	0.00	0.00
CO/O_2	23.88 / 12.54	12.56	0.02
CO	59.70	0.00	0.00
SO_2/O_2	8.16 / 12.54	12.62	0.08
SO_2	20.4	0.29	0.29
C_3H_8/O_2	33.32 / 12.54	12.58	0.04
C_3H_8	83.3	0.00	0.00
		Total Deviation (ppm)[2]	0.48
		% of Calibration Span[3]	2.30

1 - Measured concentrations were corrected for system bias.

2 - In summing the total deviation use the larger of the absolute values obtained for the interferent tested with and without the pollutant present.

3 - Total Interference must be less than 2.50% of the calibration span.

BEST AVAILABLE COPY

Airgas

Airgas Great Lakes, Inc.
2009 Bellaire Ave.
Royal Oak, MI 48067
Ph: (248) 399-9150
Fax: (248) 584-2540
http://www.airgas.com

CERTIFICATE OF ANALYSIS
Grade of Product: EPA Protocol

Customer:	DERENZO		
Part Number:	E02NI99E15A0284	Reference Number:	32-400026149-1
Cylinder Number:	CC201382	Cylinder Volume:	144 Cu.Ft.
Laboratory:	MIC - Royal Oak-32 (SAP) - MI	Cylinder Pressure:	2015 PSIG
PGVP Number:	B62011	Valve Outlet:	660
		Analysis Date:	Nov 09, 2011

Expiration Date: Nov 09, 2013

Certification performed in accordance with "EPA Traceability Protocol (Sept. 1997)" using the assay procedures listed. Analytical Methodology does not require correction for analytical interferences. This cylinder has a total analytical uncertainty as stated below with a confidence level of 95%. There are no significant impurities which affect the use of this calibration mixture. All concentrations are on a volume/volume basis unless otherwise noted.
Do Not Use This Cylinder below 150 psig.i.e. 1 Mega Pascal

ANALYTICAL RESULTS

Component	Requested Concentration	Actual Concentration	Protocol Method	Total Relative Uncertainty
NITRIC OXIDE	200.0 PPM	198.7 PPM	G1	±2% NIST Traceable
NITROGEN	Balance			

Total oxides of nitrogen	200.1 PPM	For Reference Only

CALIBRATION STANDARDS

Type	Lot ID	Cylinder No	Concentration	Expiration Date
NTRM	11060139	CC332059	248.4PPM NITRIC OXIDE/NITROGEN	Jan 11, 2017

ANALYTICAL EQUIPMENT

Instrument/Make/Model	Analytical Principle	Last Multipoint Calibration
E/N 54, 250ppmFS NO, Nicolet 6700	Fourier Transform Infrared (FTIR)	Oct 13, 2011

Triad Data Available Upon Request

Notes:

Approved for Release

Airgas

Airgas Speciality Gases
12722 S. Wentworth Ave.
Chicago, IL 60628
(773) 785-3000 Fax: (773) 785-1928
www.airgas.com

CERTIFICATE OF ANALYSIS
Grade of Product: EPA Protocol

Part Number:	E03NI99E15A1376	Reference Number:	54-124284457-1
Cylinder Number:	CC111390	Cylinder Volume:	144 Cu.Ft.
Laboratory:	ASG - Chicago - IL	Cylinder Pressure:	2015 PSIG
PGVP Number:	B12011	Valve Outlet:	660
Gas Code:	NO2	Analysis Date:	Oct 21, 2011

Expiration Date: Apr 21, 2012

Certification performed in accordance with "EPA Traceability Protocol (Sept. 1997)" using the assay procedures listed. Analytical Methodology does not require correction for analytical interferences. This cylinder has a total analytical uncertainty as stated below with a confidence level of 95%. There are no significant impurities which affect the use of this calibration mixture. All concentrations are on a volume/volume basis unless otherwise noted.
Do Not Use This Cylinder below 150 psig.i.e. 1 Mega Pascal

ANALYTICAL RESULTS

Component	Requested Concentration	Actual Concentration	Protocol Method	Total Relative Uncertainty
NITROGEN DIOXIDE	50.00 PPM	49.17 PPM		
NITROGEN	Balance			

CALIBRATION STANDARDS

Type	Lot ID	Cylinder No	Concentration	Expiration Date
GMIS/NO2	124233681115	CC283668	61.18PPM NITROGEN DIOXIDE/	Mar 07, 2013

ANALYTICAL EQUIPMENT

Instrument/Make/Model	Analytical Principle	Last Multipoint Calibration
(CH-3) ECO PHYSICS CLD822S	Chemiluminescence	Oct 13, 2011

Triad Data Available Upon Request

Notes:

Approved for Release

BEST AVAILABLE COPY

Airgas

Airgas Great Lakes
2009 Bellaire Ave.
Royal Oak, MI 48067-8020
www.airgas.com

CERTIFICATE OF ANALYSIS
Grade of Product: EPA Protocol

Customer:	DERENZO		
Part Number:	E02NI77E15A0000	Reference Number:	32-400036312-1
Cylinder Number:	CC148234	Cylinder Volume:	159 Cu.Ft.
Laboratory:	MIC - Royal Oak-32 (SAP) - MI	Cylinder Pressure:	2015 PSIG
PGVP Number:	B62012	Valve Outlet:	580
Gas Code:	CO2	Analysis Date:	Jan 17, 2012

Expiration Date: Jan 17, 2015

Certification performed in accordance with "EPA Traceability Protocol (Sept. 1997)" using the assay procedures listed. Analytical Methodology does not require correction for analytical interferences. This cylinder has a total analytical uncertainty as stated below with a confidence level of 95%. There are no significant impurities which affect the use of this calibration mixture. All concentrations are on a volume/volume basis unless otherwise noted.
Do Not Use This Cylinder below 150 psig.i.e. 1 Mega Pascal

ANALYTICAL RESULTS

Component	Requested Concentration	Actual Concentration	Protocol Method	Total Relative Uncertainty
CARBON DIOXIDE	22.75 %	22.83 %	G2	1.0 % NIST Traceable
NITROGEN	Balance			

CALIBRATION STANDARDS

Type	Lot ID	Cylinder No	Concentration	Expiration Date
NTRM	08061311	CC254763	20.09% CARBON DIOXIDE/NITROGEN	Jul 15, 2012

ANALYTICAL EQUIPMENT

Instrument/Make/Model	Analytical Principle	Last Multipoint Calibration
E/N 54, 20% FS CO_2, Nicolet 6700	Fourier Transform Infrared (FTIR)	Dec 21, 2011

Triad Data Available Upon Request

Notes:

AZM

Approved for Release

Airgas

Airgas Great Lakes
2009 Bellaire Ave.
Royal Oak, MI 48067-8020
www.airgas.com

CERTIFICATE OF ANALYSIS
Grade of Product: EPA Protocol

Customer:	DERENZO & ASSOCIATES		
Part Number:	E02AI99E15A0461	Reference Number:	32-400030138-1
Cylinder Number:	CC198052	Cylinder Volume:	146 Cu.Ft.
Laboratory:	MIC - Royal Oak-32 (SAP) - MI	Cylinder Pressure:	2015 PSIG
PGVP Number:	B62011	Valve Outlet:	590
		Analysis Date:	Dec 07, 2011

Expiration Date: Dec 07, 2014

Certification performed in accordance with "EPA Traceability Protocol (Sept. 1997)" using the assay procedures listed. Analytical Methodology does not require correction for analytical interferences. This cylinder has a total analytical uncertainty as stated below with a confidence level of 95%. There are no significant impurities which affect the use of this calibration mixture. All concentrations are on a volume/volume basis unless otherwise noted.
Do Not Use This Cylinder below 150 psig.i.e. 1 Mega Pascal

ANALYTICAL RESULTS

Component	Requested Concentration	Actual Concentration	Protocol Method	Total Relative Uncertainty
PROPANE	85.00 PPM	85.46 PPM	G1	+/- 1% NIST Traceable
Air	Balance			

CALIBRATION STANDARDS

Type	Lot ID	Cylinder No	Concentration	Expiration Date
NTRM	090617	CC301772	97.82PPM PROPANE/AIR	Oct 02, 2013

ANALYTICAL EQUIPMENT

Instrument/Make/Model	Analytical Principle	Last Multipoint Calibration
E/N 54, 250ppmFS C3H8, Nicolet 6700	Fourier Transform Infrared (FTIR)	Nov 18, 2011

Triad Data Available Upon Request

Notes:

Approved for Release

BEST AVAILABLE COPY

Airgas

Airgas Great Lakes
2009 Bellaire Ave.
Royal Oak, MI 48067-8020
www.airgas.com

CERTIFICATE OF ANALYSIS
Grade of Product: EPA Protocol

Customer:	DERENZO & ASSOIATES		
Part Number:	E02NI79E15AC375	Reference Number:	32-400035860-1
Cylinder Number:	SG9160230BAL	Cylinder Volume:	146 Cu.Ft.
Laboratory:	MIC - Royal Oak-32 (SAP) - MI	Cylinder Pressure:	2015 PSIG
PGVP Number:	B62012	Valve Outlet:	590
Gas Code:	O2	Analysis Date:	Jan 17, 2012

Expiration Date: Jan 17, 2015

Certification performed in accordance with "EPA Traceability Protocol (Sept. 1997)" using the assay procedures listed. Analytical Methodology does not require correction for analytical interferences. This cylinder has a total analytical uncertainty as stated below with a confidence level of 95%. There are no significant impurities which affect the use of this calibration mixture. All concentrations are on a volume/volume basis unless otherwise noted.
Do Not Use This Cylinder below 150 psig.i.e. 1 Mega Pascal

ANALYTICAL RESULTS

Component	Requested Concentration	Actual Concentration	Protocol Method	Total Relative Uncertainty
OXYGEN	22.51%	22.51%	G1	NIST traceable
NITROGEN	Balance			

CALIBRATION STANDARDS

Type	Lot ID	Cylinder No	Concentration	Expiration Date
NTRM	6060823	CC207967	22.51% OXYGEN/NITROGEN	May 01, 2016

ANALYTICAL EQUIPMENT

Instrument/Make/Model	Analytical Principle	Last Multipoint Calibration
E/N 51, 25%FS O2, Rosemont 755R	Paramagnetic (Para)	Dec 22, 2011

Triad Data Available Upon Request

Notes:

Approved for Release

BEST AVAILABLE COPY

Airgas

Airgas Great Lakes, Inc.
2009 Bellaire Ave.
Royal Oak, MI 48067
Ph: (248) 399-9150
Fax: (248) 584-2540
http://www.airgas.com

CERTIFICATE OF ANALYSIS
Grade of Product: EPA Protocol

Customer:	DERENZO 160625		
Part Number:	E02NI87E15A2082	Reference Number:	32-112275343-2
Cylinder Number:	XC011948B	Cylinder Volume:	146 Cu.Ft.
Laboratory:	MIC - Royal Oak-32 - MI	Cylinder Pressure:	2015 PSIG
Analysis Date:	May 04, 2011	Valve Outlet:	590

Expiration Date: May 04, 2014

Certification performed in accordance with "EPA Traceability Protocol (Sept. 1997)" using the assay procedures listed. Analytical Methodology does not require correction for analytical interferences. This cylinder has a total analytical uncertainty as stated below with a confidence level of 95%. There are no significant impurities which affect the use of this calibration mixture. All concentrations are on a volume/volume basis unless otherwise noted.
Do Not Use This Cylinder below 150 psig.i.e. 1 Mega Pascal

ANALYTICAL RESULTS

Component	Requested Concentration	Actual Concentration	Protocol Method	Total Relative Uncertainty
OXYGEN	12.50 %	12.53 %	G1	0.7% NIST Traceable
NITROGEN	Balance			

CALIBRATION STANDARDS

Type	Lot ID	Cylinder No	Concentration	Expiration Date
NTRM	980509	SG9168307BAL	16.04% OXYGEN/NITROGEN	Dec 01, 2015

ANALYTICAL EQUIPMENT

Instrument/Make/Model	Analytical Principle	Last Multipoint Calibration
E/N 51, 25%FS O2, Rosemont 755R	Paramagnetic (Para)	Apr 28, 2011

Triad Data Available Upon Request

Notes:

Approved for Release

VISIBLE EMISSIONS EVALUATOR

Bingham Robert

This is to certify that the above named observer has met the specifications of Federal Reference Method 9 and is qualified as a visible emissions evaluator. Maximum deviation on white and black smoke did not exceed 7.5% opacity and no single error exceeding 15% opacity was incurred during the certification test conducted by Eastern Technical Associates, Inc. of Raleigh, N.C.

This certificate is valid for six months from date of issue.

399149	BIN659898
Certificate Number	Student ID Number
10/5/2011	Detroit, MI
Date of Certification	Location
4/5/2012	DETF09
Certification Expiration Date	Last Lecture

Jody Monk

Director of Training

Derenzo and Associates, Inc.

METHOD 205 - DILUTION MODULE VERIFICATION

Date: **3/21/2012**
Client: **Seminole Energy**

Evaluate dilution module at two (2) dilutions within the range of the module. Repeat twice (total of 3 trials). Calculate average instrument response for each triplicate injection.

Gas used: 20.95 %, O_2 calibration gas

Divider Setting	Expected Concentration	Injection No. 1	Injection No. 2	Injection No. 3	Average	%Error
100%	20.95	20.98	21.00	20.97	20.98	0.16%
60%	12.57	12.52	12.53	12.52	12.52	-0.37%
40%	8.38	8.34	8.34	8.34	8.34	-0.48%
0%	0.00	0.01	0.01	0.00	0.01	-

Individual Response Errors as Compared to Average		
0.0%	0.1%	-0.1%
0.0%	0.1%	0.0%
0.0%	0.0%	0.0%
-	-	-

Introduce mid-level protocol gas (instrument). Repeat twice (total of 3 injections).

Mid-Range Gas	Expected Concentration	Injection No. 1	Injection No. 2	Injection No. 3	Average	%Error
O_2	12.55	12.57	12.59	12.61	12.59	0.32%

Individual Response Errors as Compared to Average		
-0.2%	0.0%	0.2%

Criteria:

1. Each injection shall differ no more than 2% from the triplicate average.
2. No average shall be greater than 2% of the predicted value.

Derenzo and Associates, Inc.

METHOD 7E - NOx CONVERTER VERIFICATION

Date: **3/22/2012**
Client: **Seminole Energy**

Pre Test Analyzer Calibration Introduce high, mid, low calibration gases (must be within 2% of calibration span).

Gas	Time	Expected Concentration (ppmv)	Observed Concentration (ppmv)	Percent Error
High	8:14	198.3	199.3	**0.52**
Mid	8:17	79.3	78.63	**-0.35**
Low	8:09	0.00	0.46	**0.23**

NO_2 Cal gas (ppm) =	**49.17**	**Date**	**Time**	**NOx**	**Average NOx**
				(ppmv)	(ppmv)
START NOx Converter		3/22/2012	8:35	49.82	-
NOx Converter		3/22/2012	8:36	50.13	49.98
NOx Converter		3/22/2012	8:37	50.56	50.17
NOx Converter		3/22/2012	8:38	50.56	50.27
NOx Converter		3/22/2012	8:39	50.72	50.36
NOx Converter		3/22/2012	8:40	51.06	50.61
NOx Converter		3/22/2012	8:41	51.06	50.56
NOx Converter		3/22/2012	8:42	51.06	50.74
NOx Converter		3/22/2012	8:43	51.06	50.87
END NOx Converter		3/22/2012	8:44	51.06	50.71

$Eff_{NO2} = (C_{dir}/C_v) \times 100 =$ 103.1 % 50.71

The NO_2 to NOx conversion efficiency (Eff_{NO2}), calculated according to equation 7E-7, must be equal to or greater than 90 percent.

Post Test Analyzer Calibration Introduce a calibration gas that most closely matches the concentration observed during the test (must be within 1% of calibration span).

Gas	Time	Expected Concentration (ppmv)	Observed Concentration (ppmv)	Percent Error
Mid	11:32	79.3	79.27	**-0.03**
Zero	11:23	0.00	0.97	**0.49**

Derenzo and Associates, Inc.

Determination of Stratification
USEPA Method 7E Section 8.1.2

Date: 3/22/2012
Client: Seminole Energy
Source: EU-005 - CAT3520 (ICE#4)

Measure three points located at 16.7%, 50.0% and 83.3% of stack diameter for twice the system response time. Determine the pecent difference of the response at each point compared to the three point average.

Sample Point	Time	CO (ppmv)	Variance (% of mean)	Status
Point 1	0955-1014	594.8	0.09%	pass
Point 2	1015-1034	593.9	0.06%	pass
Point 3	1035-1054	594.1	0.03%	pass
	Mean	594.3		

Source considered to be unstratified if concentration at each point differs from the mean concentration by no more than:

a) +/- 5% of the mean, or
b) +/- 0.5 ppmv, whichever is less restrictive

+5% mean	-5% mean
624	594

Date	Hour	CO	Hour	CO
3/22/2012	9:55	585.59	10:25	582.45
3/22/2012	9:56	599.89	10:26	595.94
3/22/2012	9:57	607.45	10:27	586.82
3/22/2012	9:58	597.14	10:28	597.79
3/22/2012	9:59	580.68	10:29	598.88
3/22/2012	10:00	610.61	10:30	592.13
3/22/2012	10:01	605.19	10:31	574.76
3/22/2012	10:02	593.61	10:32	591.29
3/22/2012	10:03	583.35	10:33	600.92
3/22/2012	10:04	594.9	10:34	595.06
3/22/2012	10:05	598.17	10:35	593.08
3/22/2012	10:06	582.46	10:36	599.27
3/22/2012	10:07	587	10:37	593.54
3/22/2012	10:08	590.24	10:38	592.65
3/22/2012	10:09	598.28	10:39	596.87
3/22/2012	10:10	604.11	10:40	590.21
3/22/2012	10:11	590.36	10:41	609.72
3/22/2012	10:12	600.3	10:42	598.92
3/22/2012	10:13	598.66	10:43	597.3
3/22/2012	10:14	588.84	10:44	593.62
3/22/2012	10:15	594.91	10:45	580.05
3/22/2012	10:16	592.43	10:46	587.08
3/22/2012	10:17	615.17	10:47	593.23
3/22/2012	10:18	593.75	10:48	589.63
3/22/2012	10:19	582.04	10:49	585.71
3/22/2012	10:20	596.75	10:50	582.54
3/22/2012	10:21	584.02	10:51	591.06
3/22/2012	10:22	613.73	10:52	603.28
3/22/2012	10:23	594.59	10:53	595.47
3/22/2012	10:24	596.01	10:54	609.7

Derenzo and Associates, Inc.

Calibration Error, System Bias, Drift Worksheet

Location: Seminole Energy EU005 (ICE#4)
Date: 3/22/12

NOx	Calibration span (CS)	198.3 ppmv	
CO	Calibration span (CS)	980.4 ppmv	
CO2	Calibration span (CS)	22.83 %	
O2	Calibration span (CS)	20.95 %	

Abbreviations
CS = calibration span
ACE = analyzer calibration error
SB = system bias
dir = direct instrument injection

Initial 3 point instrument calibration

			Actual	Expected	ACE (% of CS)	Criteria
NOx	high	direct (Cdir)	199.34	198.30	0.7%	2%
NOx	mid	direct (Cdir)	78.63	79.32	-0.4%	2%
NOx	zero	direct (Cdir)	0.46	0.00	0.2%	2%
CO	high	direct (Cdir)	981.03	980.40	0.1%	2%
CO	mid	direct (Cdir)	782.92	784.32	-0.1%	2%
CO	zero	direct (Cdir)	0.02	0.00	0.0%	2%
CO2	high	direct (Cdir)	22.85	22.83	0.1%	2%
CO2	mid	direct (Cdir)	13.65	13.70	-0.2%	2%
CO2	zero	direct (Cdir)	0.00	0.00	0.0%	2%
O2	high	direct (Cdir)	21.00	20.95	0.2%	2%
O2	mid	direct (Cdir)	8.35	8.38	-0.1%	2%
O2	zero	direct (Cdir)	0.01	0.00	0.0%	2%

Initial system bias check/ENG#4 Pretest 1 System Bias

			Actual	Cdir	SB (% of CS)	Criteria	Response Time	sec
NOx	upscale	system (Cs)	78.62	78.63	0.0%	5%	Upscale	115
NOx	zero	system (Cs)	0.95	0.46	0.2%	5%	Downscale	115
CO	upscale	system (Cs)	780.69	782.92	-0.2%	5%	Upscale	70
CO	zero	system (Cs)	0.61	0.02	0.1%	5%	Downscale	67
CO2	upscale	system (Cs)	13.50	13.65	-0.7%	5%	Upscale	75
CO2	zero	system (Cs)	0.02	0.00	0.1%	5%	Downscale	75
O2	upscale	system (Cs)	8.36	8.35	0.0%	5%	Upscale	95
O2	zero	system (Cs)	0.01	0.01	0.0%	5%	Downscale	112

ENG#4 Postest 1 Pretest 2 System Bias

			Actual	Cdir	SB (% of CS)	Criteria	Drift (SBi-SBf)	Criteria
NOx	upscale	system (Cs)	78.11	78.63	-0.3%	5%	0.3%	3%
NOx	zero	system (Cs)	0.96	0.46	0.3%	5%	0.1%	3%
CO	upscale	system (Cs)	781.72	782.92	-0.1%	5%	0.1%	3%
CO	zero	system (Cs)	-0.04	0.02	0.0%	5%	0.1%	3%
CO2	upscale	system (Cs)	13.46	13.65	-0.8%	5%	0.2%	3%
CO2	zero	system (Cs)	0.01	0.00	0.0%	5%	0.0%	3%
O2	upscale	system (Cs)	8.35	8.35	0.0%	5%	0.0%	3%
O2	zero	system (Cs)	0.01	0.01	0.0%	5%	0.0%	3%

ENG#4 Postest 2 Pretest 3 System Bias

			Actual	Cdir	SB (% of CS)	Criteria	Drift (SBi-SBf)	Criteria
NOx	upscale	system (Cs)	77.59	78.63	-0.7%	5%	0.3%	3%
NOx	zero	system (Cs)	0.95	0.46	0.3%	5%	0.0%	3%
CO	upscale	system (Cs)	785.02	782.92	0.2%	5%	0.3%	3%
CO	zero	system (Cs)	1.87	0.02	0.2%	5%	0.2%	3%
CO2	upscale	system (Cs)	13.50	13.65	-0.7%	5%	0.2%	3%
CO2	zero	system (Cs)	0.02	0.00	0.1%	5%	0.0%	3%
O2	upscale	system (Cs)	8.35	8.35	0.0%	5%	0.0%	3%
O2	zero	system (Cs)	0.01	0.01	0.0%	5%	0.0%	3%

Derenzo and Associates, Inc.

Calibration Error, System Bias, Drift Worksheet

Location: Seminole Energy EU005 (ICE#4)
Date: 3/22/12

ENG#4 Postest 3

			Actual	Cdir	SB (% of CS)	Criteria	Drift (SBi-SBf)	Criteria
NOx	upscale	system (Cs)	77.29	78.63	-0.8%	5%	0.2%	3%
NOx	zero	system (Cs)	0.43	0.46	0.0%	5%	0.3%	3%
CO	upscale	system (Cs)	783.30	782.92	0.0%	5%	0.2%	3%
CO	zero	system (Cs)	1.83	0.02	0.2%	5%	0.0%	3%
CO2	upscale	system (Cs)	13.52	13.65	-0.6%	5%	0.1%	3%
CO2	zero	system (Cs)	0.01	0.00	0.0%	5%	0.0%	3%
O2	upscale	system (Cs)	8.35	8.35	0.0%	5%	0.0%	3%
O2	zero	system (Cs)	0.01	0.01	0.0%	5%	0.0%	3%

Average Calibration Responses

		EU005 (ICE#4)		
		Test 1	Test 2	Test 3
NOx	upscale	78.37	77.85	77.44
NOx	zero	0.96	0.96	0.69
CO	upscale	781.21	783.37	784.16
CO	zero	0.29	0.92	1.85
CO2	upscale	13.48	13.48	13.51
CO2	zero	0.02	0.02	0.02
O2	upscale	8.36	8.35	8.35
O2	zero	0.01	0.01	0.01

Derenzo and Associates, Inc.

SOURCE COMPANY:	Seminole Energy
SOURCE TESTED:	ICE#4 (EU005) Exhaust
TESTING COMPANY:	Derenzo and Associates, Inc.
REFERENCE METHODS:	ALT-078
DATE OF TEST:	March 22, 2012
ANALYTE:	NMOC
Upscale SB Response Time:	170 Seconds

Calibration Error Check
Linearity Check (Must be within **5%**)

	Zero Gas	Low Gas Propane	Mid Gas Propane	High Gas Propane
		25-35% of Span	45-55% of Span	80-90% of Span
		50	90	160
		70	110	180
Cal. Gas Serial #				
Tag Value	0.00	34.18	51.28	85.46
Monitor	0.38			83.80
Expected		33.75	50.43	
Monitor		34.47	52.29	
Diff.	0.38	0.72	1.86	-1.66
% Diff	0.19%	2.11%	3.62%	-1.94%
	Pass	Pass	Pass	Pass

VOC Reference Method Analyzer
Sampling System Bias Check

NMOC RM Monitor Span = 200.00 PPM

Run No.	(Co)i Initial Zero Gas	(Co)f Final Zero Gas	Zero Gas Drift	Z-Drift Pass if **< 3%**
1	0.38	0.38	0.00%	Pass
2	0.38	0.40	0.01%	Pass
3	0.40	0.38	-0.01%	Pass

Run No.	(Cm)i Initial Upscale	(Cm)f Final Upscale	Upscale Gas Drift	Up-Drift Pass if **< 3%**
1	34.47	34.47	0.00%	Pass
2	34.47	34.28	-0.09%	Pass
3	34.28	32.67	-0.81%	Pass

APPENDIX C

LABORATORY DATA

eurofins | Air Toxics

3/26/2012
Mr. David Derenzo
Derenzo & Associates
39395 Schoolcraft Road

Livonia MI 48150

Project Name: Seminole
Project #: 1201046
Workorder #: 1203521

Dear Mr. David Derenzo

The following report includes the data for the above referenced project for sample(s) received on 3/23/2012 at Air Toxics Ltd.

The data and associated QC analyzed by Modified TO-15 are compliant with the project requirements or laboratory criteria with the exception of the deviations noted in the attached case narrative.

Thank you for choosing Air Toxics Ltd. for your air analysis needs. Air Toxics Ltd. is committed to providing accurate data of the highest quality. Please feel free to contact the Project Manager: Ausha Scott at 916-985-1000 if you have any questions regarding the data in this report.

Regards,

Ausha Scott
Project Manager

eurofins | Air Toxics

WORK ORDER #: 1203521

Work Order Summary

CLIENT:	Mr. David Derenzo Derenzo & Associates 39395 Schoolcraft Road Livonia, MI 48150	**BILL TO:**	Ms. Donna Povich Derenzo & Associates 39395 Schoolcraft Road Livonia, MI 48150
PHONE:	734-464-3880	**P.O. #**	FLD-15
FAX:	734-464-4368	**PROJECT #**	1201046 Seminole
DATE RECEIVED:	03/23/2012	**CONTACT:**	Ausha Scott
DATE COMPLETED:	03/26/2012		

FRACTION #	NAME	TEST	RECEIPT VAC./PRES.	FINAL PRESSURE
01A	SEB-1	Modified TO-15	Tedlar Bag	Tedlar Bag
02A	SEB-2	Modified TO-15	Tedlar Bag	Tedlar Bag
03A	SEB-3	Modified TO-15	Tedlar Bag	Tedlar Bag
04A	Lab Blank	Modified TO-15	NA	NA
05A	CCV	Modified TO-15	NA	NA
06A	LCS	Modified TO-15	NA	NA
06AA	LCSD	Modified TO-15	NA	NA

CERTIFIED BY: Linda J. Freeman

Laboratory Director

DATE: 03/26/12

Certfication numbers: AZ Licensure AZ0719, CA NELAP - 02110CA, LA NELAP - 02089, NY NELAP - 11291, TX NELAP - T104704434-11-3, UT NELAP -CA009332011-1, WA NELAP - C935
Name of Accrediting Agency: NELAP/Florida Department of Health, Scope of Application: Clean Air Act, Accreditation number: E87680, Effective date: 07/01/11 , Expiration date: 06/30/12.
Air Toxics Ltd. certifies that the test results contained in this report meet all requirements of the NELAC standards

180 BLUE RAVINE ROAD, SUITE B FOLSOM, CA - 95630
(916) 985-1000 . (800) 985-5955 . FAX (916) 985-1020

LABORATORY NARRATIVE
EPA Method TO-15
Derenzo & Associates
Workorder# 1203521

Three 1 Liter Tedlar Bag samples were received on March 23, 2012. The laboratory performed analysis via EPA Method TO-15 using GC/MS in the full scan mode.

This workorder was independently validated prior to submittal using 'USEPA National Functional Guidelines' as generally applied to the analysis of volatile organic compounds in air. A rules-based, logic driven, independent validation engine was employed to assess completeness, evaluate pass/fail of relevant project quality control requirements and verification of all quantified amounts.

Receiving Notes

There were no receiving discrepancies.

Analytical Notes

All Quality Control Limit exceedances and affected sample results are noted by flags. Each flag is defined at the bottom of this Case Narrative and on each Sample Result Summary page. Target compound non-detects in the samples that are associated with high bias in QC analyses have not been flagged.

Method TO-15 is validated for samples collected in specially treated canisters. As such, the use of Tedlar bags for sample collection is outside the scope of the method and not recommended for ambient or indoor air samples. It is the responsibility of the data user to determine the usability of TO-15 results generated from Tedlar bags.

Definition of Data Qualifying Flags

Eight qualifiers may have been used on the data analysis sheets and indicates as follows:

B - Compound present in laboratory blank greater than reporting limit (background subtraction not performed).
J - Estimated value.
E - Exceeds instrument calibration range.
S - Saturated peak.
Q - Exceeds quality control limits.
U - Compound analyzed for but not detected above the reporting limit.
UJ- Non-detected compound associated with low bias in the CCV and/or LCS.
N - The identification is based on presumptive evidence.

File extensions may have been used on the data analysis sheets and indicates as follows:
a-File was requantified
b-File was quantified by a second column and detector
r1-File was requantified for the purpose of reissue

eurofins | Air Toxics

Summary of Detected Compounds
EPA METHOD TO-15 GC/MS FULL SCAN

Client Sample ID: SEB-1

Lab ID#: 1203521-01A

Compound	Rpt. Limit (ppbv)	Amount (ppbv)	Rpt. Limit (ug/m3)	Amount (ug/m3)
Freon 12	50	220	250	1100
Ethanol	200	36000 E	380	68000 E
Acetone	500	20000	1200	47000
2-Propanol	200	5300	490	13000
Hexane	50	270	180	960
2-Butanone (Methyl Ethyl Ketone)	200	16000	590	46000
cis-1,2-Dichloroethene	50	220	200	860
Tetrahydrofuran	50	1800	150	5200
Cyclohexane	50	260	170	910
2,2,4-Trimethylpentane	50	130	230	600
Benzene	50	1500	160	4800
1,2-Dichloroethane	50	74	200	300
Heptane	50	510	200	2100
Trichloroethene	50	96	270	510
4-Methyl-2-pentanone	50	1000	200	4200
Toluene	50	6800	190	26000
Tetrachloroethene	50	160	340	1100
Chlorobenzene	50	83	230	380
Ethyl Benzene	50	3300	220	14000
m,p-Xylene	50	5100	220	22000
o-Xylene	50	1600	220	6800
Styrene	50	340	210	1400
Cumene	50	410	240	2000
Propylbenzene	50	270	240	1300
4-Ethyltoluene	50	930	240	4600
1,3,5-Trimethylbenzene	50	410	240	2000
1,2,4-Trimethylbenzene	50	870	240	4300
1,4-Dichlorobenzene	50	150	300	890

Client Sample ID: SEB-2

Lab ID#: 1203521-02A

Compound	Rpt. Limit (ppbv)	Amount (ppbv)	Rpt. Limit (ug/m3)	Amount (ug/m3)

eurofins | Air Toxics

Summary of Detected Compounds
EPA METHOD TO-15 GC/MS FULL SCAN

Client Sample ID: SEB-2

Lab ID#: 1203521-02A

Compound	Rpt. Limit (ppbv)	Amount (ppbv)	Rpt. Limit (ug/m3)	Amount (ug/m3)
Freon 12	50	210	250	1000
Ethanol	200	38000 E	380	72000 E
Acetone	500	20000 E	1200	48000 E
2-Propanol	200	5500	490	13000
Hexane	50	280	180	1000
2-Butanone (Methyl Ethyl Ketone)	200	16000	590	47000
cis-1,2-Dichloroethene	50	230	200	900
Tetrahydrofuran	50	1800	150	5300
Cyclohexane	50	270	170	930
2,2,4-Trimethylpentane	50	130	230	610
Benzene	50	1500	160	4900
Heptane	50	490	200	2000
Trichloroethene	50	82	270	440
4-Methyl-2-pentanone	50	1100	200	4600
Toluene	50	7000	190	26000
Tetrachloroethene	50	160	340	1100
Chlorobenzene	50	90	230	420
Ethyl Benzene	50	3600	220	16000
m,p-Xylene	50	5600	220	24000
o-Xylene	50	1800	220	7700
Styrene	50	380	210	1600
Cumene	50	490	240	2400
Propylbenzene	50	310	240	1500
4-Ethyltoluene	50	1100	240	5400
1,3,5-Trimethylbenzene	50	490	240	2400
1,2,4-Trimethylbenzene	50	1000	240	5100
1,4-Dichlorobenzene	50	180	300	1100

Client Sample ID: SEB-3

Lab ID#: 1203521-03A

Compound	Rpt. Limit (ppbv)	Amount (ppbv)	Rpt. Limit (ug/m3)	Amount (ug/m3)
Freon 12	50	200	250	990

eurofins | Air Toxics

Summary of Detected Compounds
EPA METHOD TO-15 GC/MS FULL SCAN

Client Sample ID: SEB-3

Lab ID#: 1203521-03A

Ethanol	200	38000 E	380	72000 E
Acetone	500	20000	1200	46000
2-Propanol	200	5300	490	13000
Hexane	50	260	180	930
2-Butanone (Methyl Ethyl Ketone)	200	16000	590	46000
cis-1,2-Dichloroethene	50	210	200	850
Tetrahydrofuran	50	1800	150	5400
Cyclohexane	50	260	170	880
2,2,4-Trimethylpentane	50	120	230	570
Benzene	50	1400	160	4600
1,2-Dichloroethane	50	74	200	300
Heptane	50	500	200	2000
Trichloroethene	50	84	270	450
4-Methyl-2-pentanone	50	1100	200	4500
Toluene	50	6800	190	26000
Tetrachloroethene	50	160	340	1000
Chlorobenzene	50	89	230	410
Ethyl Benzene	50	3500	220	15000
m,p-Xylene	50	5500	220	24000
o-Xylene	50	1700	220	7400
Styrene	50	380	210	1600
Cumene	50	440	240	2200
Propylbenzene	50	320	240	1600
4-Ethyltoluene	50	1100	240	5400
1,3,5-Trimethylbenzene	50	480	240	2400
1,2,4-Trimethylbenzene	50	1000	240	5100
1,4-Dichlorobenzene	50	170	300	1000

eurofins | Air Toxics

Client Sample ID: SEB-1

Lab ID#: 1203521-01A

EPA METHOD TO-15 GC/MS FULL SCAN

File Name:	**3032409**	**Date of Collection:**	**3/22/12 10:50:00 AM**
Dil. Factor:	**100**	**Date of Analysis:**	**3/24/12 11:47 AM**

Compound	Rpt. Limit (ppbv)	Amount (ppbv)	Rpt. Limit (ug/m3)	Amount (ug/m3)
Freon 12	50	220	250	1100
Freon 114	50	Not Detected	350	Not Detected
Chloromethane	500	Not Detected	1000	Not Detected
Vinyl Chloride	50	Not Detected	130	Not Detected
1,3-Butadiene	50	Not Detected	110	Not Detected
Bromomethane	500	Not Detected	1900	Not Detected
Chloroethane	200	Not Detected	530	Not Detected
Freon 11	50	Not Detected	280	Not Detected
Ethanol	200	36000 E	380	68000 E
Freon 113	50	Not Detected	380	Not Detected
1,1-Dichloroethene	50	Not Detected	200	Not Detected
Acetone	500	20000	1200	47000
2-Propanol	200	5300	490	13000
Carbon Disulfide	200	Not Detected	620	Not Detected
3-Chloropropene	200	Not Detected	630	Not Detected
Methylene Chloride	500	Not Detected	1700	Not Detected
Methyl tert-butyl ether	50	Not Detected	180	Not Detected
trans-1,2-Dichloroethene	50	Not Detected	200	Not Detected
Hexane	50	270	180	960
1,1-Dichloroethane	50	Not Detected	200	Not Detected
2-Butanone (Methyl Ethyl Ketone)	200	16000	590	46000
cis-1,2-Dichloroethene	50	220	200	860
Tetrahydrofuran	50	1800	150	5200
Chloroform	50	Not Detected	240	Not Detected
1,1,1-Trichloroethane	50	Not Detected	270	Not Detected
Cyclohexane	50	260	170	910
Carbon Tetrachloride	50	Not Detected	310	Not Detected
2,2,4-Trimethylpentane	50	130	230	600
Benzene	50	1500	160	4800
1,2-Dichloroethane	50	74	200	300
Heptane	50	510	200	2100
Trichloroethene	50	96	270	510
1,2-Dichloropropane	50	Not Detected	230	Not Detected
1,4-Dioxane	200	Not Detected	720	Not Detected
Bromodichloromethane	50	Not Detected	340	Not Detected
cis-1,3-Dichloropropene	50	Not Detected	230	Not Detected
4-Methyl-2-pentanone	50	1000	200	4200
Toluene	50	6800	190	26000
trans-1,3-Dichloropropene	50	Not Detected	230	Not Detected
1,1,2-Trichloroethane	50	Not Detected	270	Not Detected
Tetrachloroethene	50	160	340	1100
2-Hexanone	200	Not Detected	820	Not Detected

eurofins | Air Toxics

Client Sample ID: SEB-1

Lab ID#: 1203521-01A

EPA METHOD TO-15 GC/MS FULL SCAN

File Name:	**3032409**	**Date of Collection:**	**3/22/12 10:50:00 AM**
Dil. Factor:	**100**	**Date of Analysis:**	**3/24/12 11:47 AM**

Compound	Rpt. Limit (ppbv)	Amount (ppbv)	Rpt. Limit (ug/m3)	Amount (ug/m3)
Dibromochloromethane	50	Not Detected	420	Not Detected
1,2-Dibromoethane (EDB)	50	Not Detected	380	Not Detected
Chlorobenzene	50	83	230	380
Ethyl Benzene	50	3300	220	14000
m,p-Xylene	50	5100	220	22000
o-Xylene	50	1600	220	6800
Styrene	50	340	210	1400
Bromoform	50	Not Detected	520	Not Detected
Cumene	50	410	240	2000
1,1,2,2-Tetrachloroethane	50	Not Detected	340	Not Detected
Propylbenzene	50	270	240	1300
4-Ethyltoluene	50	930	240	4600
1,3,5-Trimethylbenzene	50	410	240	2000
1,2,4-Trimethylbenzene	50	870	240	4300
1,3-Dichlorobenzene	50	Not Detected	300	Not Detected
1,4-Dichlorobenzene	50	150	300	890
alpha-Chlorotoluene	50	Not Detected	260	Not Detected
1,2-Dichlorobenzene	50	Not Detected	300	Not Detected
1,2,4-Trichlorobenzene	200	Not Detected	1500	Not Detected
Hexachlorobutadiene	200	Not Detected	2100	Not Detected

E = Exceeds instrument calibration range.

Container Type: 1 Liter Tedlar Bag

Surrogates	%Recovery	Method Limits
Toluene-d8	102	70-130
1,2-Dichloroethane-d4	101	70-130
4-Bromofluorobenzene	101	70-130

eurofins | Air Toxics

Client Sample ID: SEB-2

Lab ID#: 1203521-02A

EPA METHOD TO-15 GC/MS FULL SCAN

File Name:	**3032410**	**Date of Collection:**	**3/22/12 12:30:00 PM**
Dil. Factor:	**100**	**Date of Analysis:**	**3/24/12 12:27 PM**

Compound	Rpt. Limit (ppbv)	Amount (ppbv)	Rpt. Limit (ug/m3)	Amount (ug/m3)
Freon 12	50	210	250	1000
Freon 114	50	Not Detected	350	Not Detected
Chloromethane	500	Not Detected	1000	Not Detected
Vinyl Chloride	50	Not Detected	130	Not Detected
1,3-Butadiene	50	Not Detected	110	Not Detected
Bromomethane	500	Not Detected	1900	Not Detected
Chloroethane	200	Not Detected	530	Not Detected
Freon 11	50	Not Detected	280	Not Detected
Ethanol	200	38000 E	380	72000 E
Freon 113	50	Not Detected	380	Not Detected
1,1-Dichloroethene	50	Not Detected	200	Not Detected
Acetone	500	20000 E	1200	48000 E
2-Propanol	200	5500	490	13000
Carbon Disulfide	200	Not Detected	620	Not Detected
3-Chloropropene	200	Not Detected	630	Not Detected
Methylene Chloride	500	Not Detected	1700	Not Detected
Methyl tert-butyl ether	50	Not Detected	180	Not Detected
trans-1,2-Dichloroethene	50	Not Detected	200	Not Detected
Hexane	50	280	180	1000
1,1-Dichloroethane	50	Not Detected	200	Not Detected
2-Butanone (Methyl Ethyl Ketone)	200	16000	590	47000
cis-1,2-Dichloroethene	50	230	200	900
Tetrahydrofuran	50	1800	150	5300
Chloroform	50	Not Detected	240	Not Detected
1,1,1-Trichloroethane	50	Not Detected	270	Not Detected
Cyclohexane	50	270	170	930
Carbon Tetrachloride	50	Not Detected	310	Not Detected
2,2,4-Trimethylpentane	50	130	230	610
Benzene	50	1500	160	4900
1,2-Dichloroethane	50	Not Detected	200	Not Detected
Heptane	50	490	200	2000
Trichloroethene	50	82	270	440
1,2-Dichloropropane	50	Not Detected	230	Not Detected
1,4-Dioxane	200	Not Detected	720	Not Detected
Bromodichloromethane	50	Not Detected	340	Not Detected
cis-1,3-Dichloropropene	50	Not Detected	230	Not Detected
4-Methyl-2-pentanone	50	1100	200	4600
Toluene	50	7000	190	26000
trans-1,3-Dichloropropene	50	Not Detected	230	Not Detected
1,1,2-Trichloroethane	50	Not Detected	270	Not Detected
Tetrachloroethene	50	160	340	1100
2-Hexanone	200	Not Detected	820	Not Detected

eurofins | Air Toxics

Client Sample ID: SEB-2

Lab ID#: 1203521-02A

EPA METHOD TO-15 GC/MS FULL SCAN

File Name:	**3032410**	**Date of Collection:**	**3/22/12 12:30:00 PM**
Dil. Factor:	**100**	**Date of Analysis:**	**3/24/12 12:27 PM**

Compound	Rpt. Limit (ppbv)	Amount (ppbv)	Rpt. Limit (ug/m3)	Amount (ug/m3)
Dibromochloromethane	50	Not Detected	420	Not Detected
1,2-Dibromoethane (EDB)	50	Not Detected	380	Not Detected
Chlorobenzene	50	90	230	420
Ethyl Benzene	50	3600	220	16000
m,p-Xylene	50	5600	220	24000
o-Xylene	50	1800	220	7700
Styrene	50	380	210	1600
Bromoform	50	Not Detected	520	Not Detected
Cumene	50	490	240	2400
1,1,2,2-Tetrachloroethane	50	Not Detected	340	Not Detected
Propylbenzene	50	310	240	1500
4-Ethyltoluene	50	1100	240	5400
1,3,5-Trimethylbenzene	50	490	240	2400
1,2,4-Trimethylbenzene	50	1000	240	5100
1,3-Dichlorobenzene	50	Not Detected	300	Not Detected
1,4-Dichlorobenzene	50	180	300	1100
alpha-Chlorotoluene	50	Not Detected	260	Not Detected
1,2-Dichlorobenzene	50	Not Detected	300	Not Detected
1,2,4-Trichlorobenzene	200	Not Detected	1500	Not Detected
Hexachlorobutadiene	200	Not Detected	2100	Not Detected

E = Exceeds instrument calibration range.

Container Type: 1 Liter Tedlar Bag

Surrogates	%Recovery	Method Limits
Toluene-d8	102	70-130
1,2-Dichloroethane-d4	102	70-130
4-Bromofluorobenzene	102	70-130

eurofins | Air Toxics

Client Sample ID: SEB-3

Lab ID#: 1203521-03A

EPA METHOD TO-15 GC/MS FULL SCAN

File Name:	**3032411**	**Date of Collection:**	**3/22/12 2:30:00 PM**
Dil. Factor:	**100**	**Date of Analysis:**	**3/24/12 12:57 PM**

Compound	Rpt. Limit (ppbv)	Amount (ppbv)	Rpt. Limit (ug/m3)	Amount (ug/m3)
Freon 12	50	200	250	990
Freon 114	50	Not Detected	350	Not Detected
Chloromethane	500	Not Detected	1000	Not Detected
Vinyl Chloride	50	Not Detected	130	Not Detected
1,3-Butadiene	50	Not Detected	110	Not Detected
Bromomethane	500	Not Detected	1900	Not Detected
Chloroethane	200	Not Detected	530	Not Detected
Freon 11	50	Not Detected	280	Not Detected
Ethanol	200	38000 E	380	72000 E
Freon 113	50	Not Detected	380	Not Detected
1,1-Dichloroethene	50	Not Detected	200	Not Detected
Acetone	500	20000	1200	46000
2-Propanol	200	5300	490	13000
Carbon Disulfide	200	Not Detected	620	Not Detected
3-Chloropropene	200	Not Detected	630	Not Detected
Methylene Chloride	500	Not Detected	1700	Not Detected
Methyl tert-butyl ether	50	Not Detected	180	Not Detected
trans-1,2-Dichloroethene	50	Not Detected	200	Not Detected
Hexane	50	260	180	930
1,1-Dichloroethane	50	Not Detected	200	Not Detected
2-Butanone (Methyl Ethyl Ketone)	200	16000	590	46000
cis-1,2-Dichloroethene	50	210	200	850
Tetrahydrofuran	50	1800	150	5400
Chloroform	50	Not Detected	240	Not Detected
1,1,1-Trichloroethane	50	Not Detected	270	Not Detected
Cyclohexane	50	260	170	880
Carbon Tetrachloride	50	Not Detected	310	Not Detected
2,2,4-Trimethylpentane	50	120	230	570
Benzene	50	1400	160	4600
1,2-Dichloroethane	50	74	200	300
Heptane	50	500	200	2000
Trichloroethene	50	84	270	450
1,2-Dichloropropane	50	Not Detected	230	Not Detected
1,4-Dioxane	200	Not Detected	720	Not Detected
Bromodichloromethane	50	Not Detected	340	Not Detected
cis-1,3-Dichloropropene	50	Not Detected	230	Not Detected
4-Methyl-2-pentanone	50	1100	200	4500
Toluene	50	6800	190	26000
trans-1,3-Dichloropropene	50	Not Detected	230	Not Detected
1,1,2-Trichloroethane	50	Not Detected	270	Not Detected
Tetrachloroethene	50	160	340	1000
2-Hexanone	200	Not Detected	820	Not Detected

eurofins | Air Toxics

Client Sample ID: SEB-3

Lab ID#: 1203521-03A

EPA METHOD TO-15 GC/MS FULL SCAN

File Name:	**3032411**	**Date of Collection:**	**3/22/12 2:30:00 PM**
Dil. Factor:	**100**	**Date of Analysis:**	**3/24/12 12:57 PM**

Compound	Rpt. Limit (ppbv)	Amount (ppbv)	Rpt. Limit (ug/m3)	Amount (ug/m3)
Dibromochloromethane	50	Not Detected	420	Not Detected
1,2-Dibromoethane (EDB)	50	Not Detected	380	Not Detected
Chlorobenzene	50	89	230	410
Ethyl Benzene	50	3500	220	15000
m,p-Xylene	50	5500	220	24000
o-Xylene	50	1700	220	7400
Styrene	50	380	210	1600
Bromoform	50	Not Detected	520	Not Detected
Cumene	50	440	240	2200
1,1,2,2-Tetrachloroethane	50	Not Detected	340	Not Detected
Propylbenzene	50	320	240	1600
4-Ethyltoluene	50	1100	240	5400
1,3,5-Trimethylbenzene	50	480	240	2400
1,2,4-Trimethylbenzene	50	1000	240	5100
1,3-Dichlorobenzene	50	Not Detected	300	Not Detected
1,4-Dichlorobenzene	50	170	300	1000
alpha-Chlorotoluene	50	Not Detected	260	Not Detected
1,2-Dichlorobenzene	50	Not Detected	300	Not Detected
1,2,4-Trichlorobenzene	200	Not Detected	1500	Not Detected
Hexachlorobutadiene	200	Not Detected	2100	Not Detected

E = Exceeds instrument calibration range.

Container Type: 1 Liter Tedlar Bag

Surrogates	%Recovery	Method Limits
Toluene-d8	102	70-130
1,2-Dichloroethane-d4	101	70-130
4-Bromofluorobenzene	104	70-130

eurofins | Air Toxics

Client Sample ID: Lab Blank

Lab ID#: 1203521-04A

EPA METHOD TO-15 GC/MS FULL SCAN

File Name:	**3032408**	**Date of Collection: NA**	
Dil. Factor:	**1.00**	**Date of Analysis: 3/24/12 11:13 AM**	

Compound	Rpt. Limit (ppbv)	Amount (ppbv)	Rpt. Limit (ug/m3)	Amount (ug/m3)
Freon 12	0.50	Not Detected	2.5	Not Detected
Freon 114	0.50	Not Detected	3.5	Not Detected
Chloromethane	5.0	Not Detected	10	Not Detected
Vinyl Chloride	0.50	Not Detected	1.3	Not Detected
1,3-Butadiene	0.50	Not Detected	1.1	Not Detected
Bromomethane	5.0	Not Detected	19	Not Detected
Chloroethane	2.0	Not Detected	5.3	Not Detected
Freon 11	0.50	Not Detected	2.8	Not Detected
Ethanol	2.0	Not Detected	3.8	Not Detected
Freon 113	0.50	Not Detected	3.8	Not Detected
1,1-Dichloroethene	0.50	Not Detected	2.0	Not Detected
Acetone	5.0	Not Detected	12	Not Detected
2-Propanol	2.0	Not Detected	4.9	Not Detected
Carbon Disulfide	2.0	Not Detected	6.2	Not Detected
3-Chloropropene	2.0	Not Detected	6.3	Not Detected
Methylene Chloride	5.0	Not Detected	17	Not Detected
Methyl tert-butyl ether	0.50	Not Detected	1.8	Not Detected
trans-1,2-Dichloroethene	0.50	Not Detected	2.0	Not Detected
Hexane	0.50	Not Detected	1.8	Not Detected
1,1-Dichloroethane	0.50	Not Detected	2.0	Not Detected
2-Butanone (Methyl Ethyl Ketone)	2.0	Not Detected	5.9	Not Detected
cis-1,2-Dichloroethene	0.50	Not Detected	2.0	Not Detected
Tetrahydrofuran	0.50	Not Detected	1.5	Not Detected
Chloroform	0.50	Not Detected	2.4	Not Detected
1,1,1-Trichloroethane	0.50	Not Detected	2.7	Not Detected
Cyclohexane	0.50	Not Detected	1.7	Not Detected
Carbon Tetrachloride	0.50	Not Detected	3.1	Not Detected
2,2,4-Trimethylpentane	0.50	Not Detected	2.3	Not Detected
Benzene	0.50	Not Detected	1.6	Not Detected
1,2-Dichloroethane	0.50	Not Detected	2.0	Not Detected
Heptane	0.50	Not Detected	2.0	Not Detected
Trichloroethene	0.50	Not Detected	2.7	Not Detected
1,2-Dichloropropane	0.50	Not Detected	2.3	Not Detected
1,4-Dioxane	2.0	Not Detected	7.2	Not Detected
Bromodichloromethane	0.50	Not Detected	3.4	Not Detected
cis-1,3-Dichloropropene	0.50	Not Detected	2.3	Not Detected
4-Methyl-2-pentanone	0.50	Not Detected	2.0	Not Detected
Toluene	0.50	Not Detected	1.9	Not Detected
trans-1,3-Dichloropropene	0.50	Not Detected	2.3	Not Detected
1,1,2-Trichloroethane	0.50	Not Detected	2.7	Not Detected
Tetrachloroethene	0.50	Not Detected	3.4	Not Detected
2-Hexanone	2.0	Not Detected	8.2	Not Detected

eurofins | Air Toxics

Client Sample ID: Lab Blank

Lab ID#: 1203521-04A

EPA METHOD TO-15 GC/MS FULL SCAN

File Name:	**3032408**	**Date of Collection: NA**	
Dil. Factor:	**1.00**	**Date of Analysis: 3/24/12 11:13 AM**	

Compound	Rpt. Limit (ppbv)	Amount (ppbv)	Rpt. Limit (ug/m3)	Amount (ug/m3)
Dibromochloromethane	0.50	Not Detected	4.2	Not Detected
1,2-Dibromoethane (EDB)	0.50	Not Detected	3.8	Not Detected
Chlorobenzene	0.50	Not Detected	2.3	Not Detected
Ethyl Benzene	0.50	Not Detected	2.2	Not Detected
m,p-Xylene	0.50	Not Detected	2.2	Not Detected
o-Xylene	0.50	Not Detected	2.2	Not Detected
Styrene	0.50	Not Detected	2.1	Not Detected
Bromoform	0.50	Not Detected	5.2	Not Detected
Cumene	0.50	Not Detected	2.4	Not Detected
1,1,2,2-Tetrachloroethane	0.50	Not Detected	3.4	Not Detected
Propylbenzene	0.50	Not Detected	2.4	Not Detected
4-Ethyltoluene	0.50	Not Detected	2.4	Not Detected
1,3,5-Trimethylbenzene	0.50	Not Detected	2.4	Not Detected
1,2,4-Trimethylbenzene	0.50	Not Detected	2.4	Not Detected
1,3-Dichlorobenzene	0.50	Not Detected	3.0	Not Detected
1,4-Dichlorobenzene	0.50	Not Detected	3.0	Not Detected
alpha-Chlorotoluene	0.50	Not Detected	2.6	Not Detected
1,2-Dichlorobenzene	0.50	Not Detected	3.0	Not Detected
1,2,4-Trichlorobenzene	2.0	Not Detected	15	Not Detected
Hexachlorobutadiene	2.0	Not Detected	21	Not Detected

Container Type: NA - Not Applicable

Surrogates	%Recovery	Method Limits
Toluene-d8	102	70-130
1,2-Dichloroethane-d4	100	70-130
4-Bromofluorobenzene	103	70-130

eurofins | Air Toxics

Client Sample ID: CCV

Lab ID#: 1203521-05A

EPA METHOD TO-15 GC/MS FULL SCAN

File Name:	**3032402**	**Date of Collection: NA**	
Dil. Factor:	**1.00**	**Date of Analysis: 3/24/12 08:26 AM**	

Compound	%Recovery
Freon 12	119
Freon 114	114
Chloromethane	134 Q
Vinyl Chloride	117
1,3-Butadiene	112
Bromomethane	113
Chloroethane	114
Freon 11	119
Ethanol	111
Freon 113	114
1,1-Dichloroethene	119
Acetone	117
2-Propanol	115
Carbon Disulfide	117
3-Chloropropene	111
Methylene Chloride	120
Methyl tert-butyl ether	113
trans-1,2-Dichloroethene	124
Hexane	115
1,1-Dichloroethane	120
2-Butanone (Methyl Ethyl Ketone)	115
cis-1,2-Dichloroethene	110
Tetrahydrofuran	115
Chloroform	118
1,1,1-Trichloroethane	116
Cyclohexane	110
Carbon Tetrachloride	119
2,2,4-Trimethylpentane	110
Benzene	121
1,2-Dichloroethane	130
Heptane	124
Trichloroethene	121
1,2-Dichloropropane	120
1,4-Dioxane	119
Bromodichloromethane	123
cis-1,3-Dichloropropene	121
4-Methyl-2-pentanone	120
Toluene	118
trans-1,3-Dichloropropene	122
1,1,2-Trichloroethane	116
Tetrachloroethene	120
2-Hexanone	124

eurofins | Air Toxics

Client Sample ID: CCV

Lab ID#: 1203521-05A

EPA METHOD TO-15 GC/MS FULL SCAN

File Name:	**3032402**	**Date of Collection: NA**	
Dil. Factor:	**1.00**	**Date of Analysis: 3/24/12 08:26 AM**	

Compound	**%Recovery**
Dibromochloromethane	120
1,2-Dibromoethane (EDB)	119
Chlorobenzene	115
Ethyl Benzene	116
m,p-Xylene	114
o-Xylene	114
Styrene	117
Bromoform	117
Cumene	111
1,1,2,2-Tetrachloroethane	113
Propylbenzene	115
4-Ethyltoluene	112
1,3,5-Trimethylbenzene	110
1,2,4-Trimethylbenzene	112
1,3-Dichlorobenzene	112
1,4-Dichlorobenzene	112
alpha-Chlorotoluene	110
1,2-Dichlorobenzene	112
1,2,4-Trichlorobenzene	108
Hexachlorobutadiene	111

Q = Exceeds Quality Control limits.

Container Type: NA - Not Applicable

Surrogates	**%Recovery**	**Method Limits**
Toluene-d8	101	70-130
1,2-Dichloroethane-d4	104	70-130
4-Bromofluorobenzene	105	70-130

eurofins | Air Toxics

Client Sample ID: LCS

Lab ID#: 1203521-06A

EPA METHOD TO-15 GC/MS FULL SCAN

File Name:	**3032405**	**Date of Collection: NA**	
Dil. Factor:	**1.00**	**Date of Analysis: 3/24/12 09:49 AM**	

Compound	%Recovery
Freon 12	100
Freon 114	96
Chloromethane	112
Vinyl Chloride	96
1,3-Butadiene	93
Bromomethane	98
Chloroethane	109
Freon 11	101
Ethanol	90
Freon 113	99
1,1-Dichloroethene	107
Acetone	100
2-Propanol	97
Carbon Disulfide	125
3-Chloropropene	108
Methylene Chloride	104
Methyl tert-butyl ether	97
trans-1,2-Dichloroethene	119
Hexane	98
1,1-Dichloroethane	104
2-Butanone (Methyl Ethyl Ketone)	100
cis-1,2-Dichloroethene	96
Tetrahydrofuran	95
Chloroform	104
1,1,1-Trichloroethane	101
Cyclohexane	97
Carbon Tetrachloride	102
2,2,4-Trimethylpentane	97
Benzene	102
1,2-Dichloroethane	105
Heptane	103
Trichloroethene	100
1,2-Dichloropropane	101
1,4-Dioxane	96
Bromodichloromethane	103
cis-1,3-Dichloropropene	99
4-Methyl-2-pentanone	97
Toluene	97
trans-1,3-Dichloropropene	100
1,1,2-Trichloroethane	96
Tetrachloroethene	102
2-Hexanone	99

eurofins | Air Toxics

Client Sample ID: LCS

Lab ID#: 1203521-06A

EPA METHOD TO-15 GC/MS FULL SCAN

File Name:	**3032405**	**Date of Collection: NA**	
Dil. Factor:	**1.00**	**Date of Analysis: 3/24/12 09:49 AM**	

Compound	%Recovery
Dibromochloromethane	99
1,2-Dibromoethane (EDB)	102
Chlorobenzene	98
Ethyl Benzene	98
m,p-Xylene	96
o-Xylene	96
Styrene	99
Bromoform	97
Cumene	97
1,1,2,2-Tetrachloroethane	98
Propylbenzene	99
4-Ethyltoluene	92
1,3,5-Trimethylbenzene	94
1,2,4-Trimethylbenzene	94
1,3-Dichlorobenzene	96
1,4-Dichlorobenzene	97
alpha-Chlorotoluene	88
1,2-Dichlorobenzene	98
1,2,4-Trichlorobenzene	98
Hexachlorobutadiene	96

Container Type: NA - Not Applicable

Surrogates	%Recovery	Method Limits
Toluene-d8	100	70-130
1,2-Dichloroethane-d4	106	70-130
4-Bromofluorobenzene	102	70-130

eurofins | Air Toxics

Client Sample ID: LCSD

Lab ID#: 1203521-06AA

EPA METHOD TO-15 GC/MS FULL SCAN

File Name:	**3032406**	**Date of Collection: NA**	
Dil. Factor:	**1.00**	**Date of Analysis: 3/24/12 10:17 AM**	

Compound	%Recovery
Freon 12	99
Freon 114	95
Chloromethane	105
Vinyl Chloride	94
1,3-Butadiene	95
Bromomethane	97
Chloroethane	96
Freon 11	98
Ethanol	88
Freon 113	98
1,1-Dichloroethene	107
Acetone	100
2-Propanol	96
Carbon Disulfide	124
3-Chloropropene	109
Methylene Chloride	102
Methyl tert-butyl ether	96
trans-1,2-Dichloroethene	116
Hexane	97
1,1-Dichloroethane	101
2-Butanone (Methyl Ethyl Ketone)	99
cis-1,2-Dichloroethene	95
Tetrahydrofuran	94
Chloroform	100
1,1,1-Trichloroethane	98
Cyclohexane	94
Carbon Tetrachloride	99
2,2,4-Trimethylpentane	96
Benzene	100
1,2-Dichloroethane	104
Heptane	104
Trichloroethene	100
1,2-Dichloropropane	100
1,4-Dioxane	97
Bromodichloromethane	100
cis-1,3-Dichloropropene	99
4-Methyl-2-pentanone	96
Toluene	97
trans-1,3-Dichloropropene	99
1,1,2-Trichloroethane	95
Tetrachloroethene	99
2-Hexanone	98

eurofins | Air Toxics

Client Sample ID: LCSD

Lab ID#: 1203521-06AA

EPA METHOD TO-15 GC/MS FULL SCAN

File Name:	**3032406**	**Date of Collection: NA**	
Dil. Factor:	**1.00**	**Date of Analysis: 3/24/12 10:17 AM**	

Compound	%Recovery
Dibromochloromethane	98
1,2-Dibromoethane (EDB)	101
Chlorobenzene	97
Ethyl Benzene	95
m,p-Xylene	97
o-Xylene	97
Styrene	98
Bromoform	96
Cumene	96
1,1,2,2-Tetrachloroethane	100
Propylbenzene	99
4-Ethyltoluene	92
1,3,5-Trimethylbenzene	94
1,2,4-Trimethylbenzene	97
1,3-Dichlorobenzene	96
1,4-Dichlorobenzene	97
alpha-Chlorotoluene	88
1,2-Dichlorobenzene	98
1,2,4-Trichlorobenzene	98
Hexachlorobutadiene	97

Container Type: NA - Not Applicable

Surrogates	%Recovery	Method Limits
Toluene-d8	101	70-130
1,2-Dichloroethane-d4	104	70-130
4-Bromofluorobenzene	103	70-130

Air Toxics LTD.

CHAIN-OF-CUSTODY RECORD

Sample Transportation Notice
Relinquishing signature on this document indicates that sample is being shipped in compliance with all applicable local, State, Federal, national, and international laws, regulations and ordinances of any kind. Air Toxics Limited assumes no liability with respect to the collection, handling or shipping of these samples. Relinquishing signature also indicates agreement to hold harmless, defend, and indemnify Air Toxics Limited against any claim, demand, or action, of any kind, related to the collection, handling, or shipping of samples. D.O.T. Hotline (800) 467-4922

180 BLUE RAVINE ROAD, SUITE B
FOLSOM, CA 95630-4719
(916) 985-1000 FAX (916) 985-1020

Page 1 of 1

Project Manager: Mike Brack

Collected by: (Print and Sign) Mike Brack

Company: Dorenzo & Assoc. Email: mbrack@dorenzo.com

Address: 39395 Schoolcraft City: Livonia State: MI Zip: 48150

Phone: 734-464-3880 Fax: 734-464-4368

Project Info:
P.O. #: FLD-15
Project #: 1201046
Project Name: Seminole

Turn Around Time:
☐ Normal
☐ Rush 24 hrs (specify)

Lab Use Only
Pressurized by:
Date:
Pressurization Gas: N_2 He

Lab I.D.	Field Sample I.D. (Location)	Can #	Date of Collection	Time of Collection	Analyses Requested	Canister Pressure/Vacuum Initial	Final	Receipt	Final (psi)
01A	SEB-1	—	3/22/12	10:50	TO-15 modified	—	—		
02A	SEB-2	—	↓	12:30	↓	—	—		
03A	SEB-3	—	↓	14:30	↓	—	—		

Relinquished by: (signature)	Date/Time	Received by: (signature)	Date/Time
[signature]	3/22/12	[signature]	3/23/12 0850
Relinquished by: (signature)	Date/Time	Received by: (signature)	Date/Time
Relinquished by: (signature)	Date/Time	Received by: (signature)	Date/Time

Notes: Chlorinated Compound List !!

Lab Use Only	Shipper Name	Air Bill #	Temp (°C)	Condition	Custody Seals Intact?	Work Order #
	FED EX		NA	Good	Yes No None	1203521

Form 1293 rev.11

Air Toxics LTD.

CHAIN-OF-CUSTODY RECORD

Sample Transportation Notice
Relinquishing signature on this document indicates that sample is being shipped in compliance with all applicable local, State, Federal, national, and international laws, regulations and ordinances of any kind. Air Toxics Limited assumes no liability with respect to the collection, handling or shipping of these samples. Relinquishing signature also indicates agreement to hold harmless, defend, and indemnify Air Toxics Limited against any claim, demand, or action, of any kind, related to the collection, handling, or shipping of samples. D.O.T. Hotline (800) 467-4922

180 BLUE RAVINE ROAD, SUITE B
FOLSOM, CA 95630-4719
(916) 985-1000 FAX (916) 985-1020

Page 1 of 1

Project Manager: Mike Brack
Collected by: (Print and Sign) Will Brown
Company: Seminole Energy Email: see below
Address: 39395 Schoolcraft City: Livonia State: MI Zip: 48150
Phone: 734-464-3880 Fax: mbrack@derenzo.com

Project Info:
P.O. #: Derenzo FLD-15
Project #: 1201046
Project Name: Seminole Sulfur

Turn Around Time:
☐ Normal
☐ Rush
specify

Lab Use Only:
Pressurized by:
Date:
Pressurization Gas: N_2 He

Lab I.D.	Field Sample I.D. (Location)	Can #	Date of Collection	Time of Collection	Analyses Requested	Canister Pressure/Vacuum Initial	Final	Receipt	Final (psi)
01A	SEB-1	–			D-5504	–	–		
02A	SEB-2	–			↓	–	–		
03A	SEB-3	–			↓	–	–		

Relinquished by: (signature)	Date/Time	Received by: (signature)	Date/Time
[signature]	3/27/12 15:05	[signature] ATL	3/28/12 0900
Relinquished by: (signature)	Date/Time	Received by: (signature)	Date/Time
Relinquished by: (signature)	Date/Time	Received by: (signature)	Date/Time

Notes:

Lab Use Only	Shipper Name	Air Bill #	Temp (°C)	Condition	Custody Seals Intact?	Work Order #
	FED EX		NA	GOOD	Yes No None	1203592

Form 1293 rev.11

eurofins | Air Toxics

4/2/2012
Mr. David Derenzo
Derenzo & Associates
39395 Schoolcraft Road

Livonia MI 48150

Project Name: Seminole Sulfur
Project #: 1201046
Workorder #: 1203592

Dear Mr. David Derenzo

The following report includes the data for the above referenced project for sample(s) received on 3/28/2012 at Air Toxics Ltd.

The data and associated QC analyzed by ASTM D-5504 are compliant with the project requirements or laboratory criteria with the exception of the deviations noted in the attached case narrative.

Thank you for choosing Air Toxics Ltd. for your air analysis needs. Air Toxics Ltd. is committed to providing accurate data of the highest quality. Please feel free to contact the Project Manager: Ausha Scott at 916-985-1000 if you have any questions regarding the data in this report.

Regards,

Ausha Scott
Project Manager

eurofins | Air Toxics

WORK ORDER #: 1203592

Work Order Summary

CLIENT:	Mr. David Derenzo Derenzo & Associates 39395 Schoolcraft Road Livonia, MI 48150	**BILL TO:**	Ms. Donna Povich Derenzo & Associates 39395 Schoolcraft Road Livonia, MI 48150
PHONE:	734-464-3880	**P.O. #**	Derenzo FLD-15
FAX:	734-464-4368	**PROJECT #**	1201046 Seminole Sulfur
DATE RECEIVED:	03/28/2012	**CONTACT:**	Ausha Scott
DATE COMPLETED:	04/02/2012		

FRACTION #	NAME	TEST	RECEIPT VAC./PRES.	FINAL PRESSURE
01A	SEB-1	ASTM D-5504	Tedlar Bag	Tedlar Bag
02A	SEB-2	ASTM D-5504	Tedlar Bag	Tedlar Bag
03A	SEB-3	ASTM D-5504	Tedlar Bag	Tedlar Bag
04A	Lab Blank	ASTM D-5504	NA	NA
05A	LCS	ASTM D-5504	NA	NA
05AA	LCSD	ASTM D-5504	NA	NA

CERTIFIED BY: Linda J. Freeman

Laboratory Director

DATE: 04/02/12

Certfication numbers: AZ Licensure AZ0719, CA NELAP - 02110CA, LA NELAP - 02089, NY NELAP - 11291, TX NELAP - T104704434-11-3, UT NELAP -CA009332011-1, WA NELAP - C935
Name of Accrediting Agency: NELAP/Florida Department of Health, Scope of Application: Clean Air Act, Accreditation number: E87680, Effective date: 07/01/11 , Expiration date: 06/30/12.
Air Toxics Ltd. certifies that the test results contained in this report meet all requirements of the NELAC standards

180 BLUE RAVINE ROAD, SUITE B FOLSOM, CA - 95630
(916) 985-1000 . (800) 985-5955 . FAX (916) 985-1020

LABORATORY NARRATIVE
ASTM D-5504
Derenzo & Associates
Workorder# 1203592

Three 1 Liter Tedlar Bag samples were received on March 28, 2012. The laboratory performed the analysis of sulfur compounds via ASTM D-5504 using GC/SCD. The method involves direct injection of the air sample into the GC via a fixed 2.0 mL sampling loop. See the data sheets for the reporting limits for each compound.

Receiving Notes

A collection date and time for sulfur samples SEB-1, SEB-2 and SEB-3 was not provided on the Chain of Custody. The client was contacted and a collection date of 3/27/2012 and times of 1530, 1600, and 1630 were provided.

Analytical Notes

Samples SEB-1, SEB-2 and SEB-3 were analyzed past the method specified 24 hour hold time.

Definition of Data Qualifying Flags

Seven qualifiers may have been used on the data analysis sheets and indicate as follows:
B - Compound present in laboratory blank greater than reporting limit.
J - Estimated value.
E - Exceeds instrument calibration range.
S - Saturated peak.
Q - Exceeds quality control limits.
U - Compound analyzed for but not detected above the detection limit.
M - Reported value may be biased due to apparent matrix interferences.
File extensions may have been used on the data analysis sheets and indicates as follows:
a-File was requantified
b-File was quantified by a second column and detector
r1-File was requantified for the purpose of reissue

eurofins | Air Toxics

Summary of Detected Compounds
SULFUR GASES BY ASTM D-5504 GC/SCD

Client Sample ID: SEB-1

Lab ID#: 1203592-01A

Compound	Rpt. Limit (ppbv)	Amount (ppbv)
Hydrogen Sulfide	800	43000
Methyl Mercaptan	800	5100
Dimethyl Sulfide	800	5300

Client Sample ID: SEB-2

Lab ID#: 1203592-02A

Compound	Rpt. Limit (ppbv)	Amount (ppbv)
Hydrogen Sulfide	800	40000
Methyl Mercaptan	800	4700
Dimethyl Sulfide	800	5200

Client Sample ID: SEB-3

Lab ID#: 1203592-03A

Compound	Rpt. Limit (ppbv)	Amount (ppbv)
Hydrogen Sulfide	800	42000
Methyl Mercaptan	800	5000
Dimethyl Sulfide	800	5200

eurofins | Air Toxics

Client Sample ID: SEB-1

Lab ID#: 1203592-01A

SULFUR GASES BY ASTM D-5504 GC/SCD

File Name:	**I032822**	**Date of Collection:**	**3/27/12 3:30:00 PM**
Dil. Factor:	**200**	**Date of Analysis:**	**3/28/12 02:33 PM**

Compound	Rpt. Limit (ppbv)	Amount (ppbv)
Hydrogen Sulfide	800	43000
Carbonyl Sulfide	800	Not Detected
Methyl Mercaptan	800	5100
Ethyl Mercaptan	800	Not Detected
Dimethyl Sulfide	800	5300
Carbon Disulfide	1000	Not Detected
Isopropyl Mercaptan	800	Not Detected
tert-Butyl Mercaptan	800	Not Detected
n-Propyl Mercaptan	800	Not Detected
Ethyl Methyl Sulfide	800	Not Detected
Thiophene	800	Not Detected
Isobutyl Mercaptan	800	Not Detected
Diethyl Sulfide	800	Not Detected
n-Butyl Mercaptan	800	Not Detected
Dimethyl Disulfide	800	Not Detected
3-Methylthiophene	800	Not Detected
Tetrahydrothiophene	800	Not Detected
2-Ethylthiophene	800	Not Detected
2,5-Dimethylthiophene	800	Not Detected
Diethyl Disulfide	800	Not Detected

Container Type: 1 Liter Tedlar Bag

eurofins | Air Toxics

Client Sample ID: SEB-2

Lab ID#: 1203592-02A

SULFUR GASES BY ASTM D-5504 GC/SCD

File Name:	**I032823**	**Date of Collection:**	**3/27/12 4:00:00 PM**
Dil. Factor:	**200**	**Date of Analysis:**	**3/28/12 02:56 PM**

Compound	Rpt. Limit (ppbv)	Amount (ppbv)
Hydrogen Sulfide	800	40000
Carbonyl Sulfide	800	Not Detected
Methyl Mercaptan	800	4700
Ethyl Mercaptan	800	Not Detected
Dimethyl Sulfide	800	5200
Carbon Disulfide	1000	Not Detected
Isopropyl Mercaptan	800	Not Detected
tert-Butyl Mercaptan	800	Not Detected
n-Propyl Mercaptan	800	Not Detected
Ethyl Methyl Sulfide	800	Not Detected
Thiophene	800	Not Detected
Isobutyl Mercaptan	800	Not Detected
Diethyl Sulfide	800	Not Detected
n-Butyl Mercaptan	800	Not Detected
Dimethyl Disulfide	800	Not Detected
3-Methylthiophene	800	Not Detected
Tetrahydrothiophene	800	Not Detected
2-Ethylthiophene	800	Not Detected
2,5-Dimethylthiophene	800	Not Detected
Diethyl Disulfide	800	Not Detected

Container Type: 1 Liter Tedlar Bag

eurofins | Air Toxics

Client Sample ID: SEB-3

Lab ID#: 1203592-03A

SULFUR GASES BY ASTM D-5504 GC/SCD

File Name:	**I032824**	**Date of Collection:**	**3/27/12 4:30:00 PM**
Dil. Factor:	**200**	**Date of Analysis:**	**3/28/12 03:21 PM**

Compound	Rpt. Limit (ppbv)	Amount (ppbv)
Hydrogen Sulfide	800	42000
Carbonyl Sulfide	800	Not Detected
Methyl Mercaptan	800	5000
Ethyl Mercaptan	800	Not Detected
Dimethyl Sulfide	800	5200
Carbon Disulfide	1000	Not Detected
Isopropyl Mercaptan	800	Not Detected
tert-Butyl Mercaptan	800	Not Detected
n-Propyl Mercaptan	800	Not Detected
Ethyl Methyl Sulfide	800	Not Detected
Thiophene	800	Not Detected
Isobutyl Mercaptan	800	Not Detected
Diethyl Sulfide	800	Not Detected
n-Butyl Mercaptan	800	Not Detected
Dimethyl Disulfide	800	Not Detected
3-Methylthiophene	800	Not Detected
Tetrahydrothiophene	800	Not Detected
2-Ethylthiophene	800	Not Detected
2,5-Dimethylthiophene	800	Not Detected
Diethyl Disulfide	800	Not Detected

Container Type: 1 Liter Tedlar Bag

eurofins | Air Toxics

Client Sample ID: Lab Blank

Lab ID#: 1203592-04A

SULFUR GASES BY ASTM D-5504 GC/SCD

File Name:	I032812	**Date of Collection: NA**	
Dil. Factor:	1.00	**Date of Analysis: 3/28/12 10:56 AM**	

Compound	Rpt. Limit (ppbv)	Amount (ppbv)
Hydrogen Sulfide	4.0	Not Detected
Carbonyl Sulfide	4.0	Not Detected
Methyl Mercaptan	4.0	Not Detected
Ethyl Mercaptan	4.0	Not Detected
Dimethyl Sulfide	4.0	Not Detected
Carbon Disulfide	5.0	Not Detected
Isopropyl Mercaptan	4.0	Not Detected
tert-Butyl Mercaptan	4.0	Not Detected
n-Propyl Mercaptan	4.0	Not Detected
Ethyl Methyl Sulfide	4.0	Not Detected
Thiophene	4.0	Not Detected
Isobutyl Mercaptan	4.0	Not Detected
Diethyl Sulfide	4.0	Not Detected
n-Butyl Mercaptan	4.0	Not Detected
Dimethyl Disulfide	4.0	Not Detected
3-Methylthiophene	4.0	Not Detected
Tetrahydrothiophene	4.0	Not Detected
2-Ethylthiophene	4.0	Not Detected
2,5-Dimethylthiophene	4.0	Not Detected
Diethyl Disulfide	4.0	Not Detected

Container Type: NA - Not Applicable

eurofins | Air Toxics

Client Sample ID: LCS

Lab ID#: 1203592-05A

SULFUR GASES BY ASTM D-5504 GC/SCD

File Name:	**I032810**	**Date of Collection: NA**
Dil. Factor:	**1.00**	**Date of Analysis: 3/28/12 10:14 AM**

Compound	%Recovery
Hydrogen Sulfide	95
Carbonyl Sulfide	86
Methyl Mercaptan	93
Ethyl Mercaptan	87
Dimethyl Sulfide	94
Carbon Disulfide	95
Isopropyl Mercaptan	85
tert-Butyl Mercaptan	82
n-Propyl Mercaptan	83
Ethyl Methyl Sulfide	91
Thiophene	92
Isobutyl Mercaptan	88
Diethyl Sulfide	91
n-Butyl Mercaptan	91
Dimethyl Disulfide	91
3-Methylthiophene	93
Tetrahydrothiophene	98
2-Ethylthiophene	102
2,5-Dimethylthiophene	88
Diethyl Disulfide	101

Container Type: NA - Not Applicable

eurofins | Air Toxics

Client Sample ID: LCSD

Lab ID#: 1203592-05AA

SULFUR GASES BY ASTM D-5504 GC/SCD

File Name:	I032828	**Date of Collection: NA**	
Dil. Factor:	1.00	**Date of Analysis: 3/28/12 06:46 PM**	

Compound	%Recovery
Hydrogen Sulfide	100
Carbonyl Sulfide	93
Methyl Mercaptan	105
Ethyl Mercaptan	97
Dimethyl Sulfide	105
Carbon Disulfide	106
Isopropyl Mercaptan	93
tert-Butyl Mercaptan	96
n-Propyl Mercaptan	94
Ethyl Methyl Sulfide	109
Thiophene	102
Isobutyl Mercaptan	97
Diethyl Sulfide	102
n-Butyl Mercaptan	100
Dimethyl Disulfide	104
3-Methylthiophene	103
Tetrahydrothiophene	110
2-Ethylthiophene	113
2,5-Dimethylthiophene	98
Diethyl Disulfide	109

Container Type: NA - Not Applicable

APPENDIX D

SAMPLE CALCULATIONS

EXAMPLE CALCULATIONS

Equation 1a - Dry Molecular Weight:

MWd = 0.440(%CO2) + 0.320(%O2) + 0.280(%N2 + %CO)

Equation 1b - Wet Molecular Weight:

MWw = MWd(1-B*ws*) + 18.0(B*ws*)

Equation 2a - Meter Volume at Standard Conditions:

$$Vm(std) = VmY \frac{(Tstd)(Pbar + \square H/13.6)}{(Tm)(Pstd)}$$

Equation 2b - Volume of Water Vapor Condensed:

Vwc(std) = K1(Wf-Wi)

Equation 2c - Moisture Content:

B*ws* = Vwc(std)/(Vwc(std) + Vm(std))

Equation 3a - Velocity at a Traverse Point:

$$Vd = KpCp(Ts\square P/PsMWw)^{1/2}$$

Equation 3b - Volumetric Flow Rate (Actual Basis):

Q = Vd(avg)Ad 60

Equation 3c - Volumetric Flow Rate (Standard Basis):

$$Qstd = Q \frac{(Tstd)(Ps)}{(Ts)(Pstd)}$$

Equation 3d - Volumetric Flow Rate (Standard Dry Basis):

Qstd(dry) = Qstd(1-B*ws*)

Equation 4a – Nitrogen Oxides Concentration (ppmvd)

NOxC = ((NOx ppmvd-avg. zero) x Cal. Gas conc.)) / Avg. cal. – Avg. zero)

Equation 4b – Nitrogen Oxides Emission Rate: (lb/hr)

NOxER (lb/hr) = NOxC x Qstd(dry) x 46.01 x 0.07524/28950000

Equation 4c – Nitrogen Oxides Emission Rate: (g/bHp-hr)

NOxER (g/bHp-hr) = NOxER (lb/hr) *(453.6 g/lb) 0.7457 kW/bHp) / (kW /0.96)

Equation 5a – Carbon Monoxide Concentration (ppmvd)

COC (ppmvd) = (ppmCO x (1-(%CO_2/100)))-avg. zero) x Cal. Gas conc.))/ Avg. cal. – Avg. zero)

Equation 5b – – Carbon Monoxide Emission Rate: (lb/hr)

COER (lb/hr) = COC x Qstd(dry) x 28.20 x 0.07524/28950000

Equation 5c – Carbon monoxide Emission Rate: (g/bHp-hr)

COER (g/bHP-hr) = (COER (lb/hr) *(453.6 g/lb) 0.7457 kW/bHp) / (kW /0.96)

Equation 6a – Brake-horse Power (bHp)

bHp = (kW/0.961) * bHp/0.7457kW

Equation 7a – Hydrogen Chloride Concentration: (ppmv)

HClC (ppmv) = Laboratory Report

Equation 7b – Hydrogen Chloride Emission Factor: (lb/MMscf)

HClER (lb/MMscf) = ppmv*chlorine atoms*(36.46 lb HCl/mol) / (387 ft3/mol)

Equation 8a – Sulfur Dioxide Concentration: (ppmv)

SO2C (ppmv) = Laboratory Report

Equation 8b – Hydrogen Chloride Emission Factor: (lb/MMscf)

SO2ER (lb/MMscf) = ppmv*sulfur atoms*(64.06 lb SO2/mol) / (387 ft3/mol)

SYMBOL IDENTIFICATION

Ad	=	Area of duct (ft^2)
bHp	=	Brake-horse Power
B*ws*	=	Water vapor in gas stream, proportional by volume
COC	=	Carbon monoxide concentration (ppmvd)
COER	=	Carbon monoxide emission rate (lb/hr)
Cp	=	Pitot tube calibration factor (unitless)
K1	=	Constant (0.04715 ft^3/g)
Kp	=	Constant (85.49)
kW	=	Kilowatt
lb/MMscf	=	pounds per million standard cubic foot
MWd	=	Duct gas dry molecular weight (lb/lb-mole)
MWw	=	Duct gas wet molecular weight (lb/lb-mole)
NOxC	=	Nitrogen Oxides Concentration (ppmvd)
NOxER	=	Nitrogen Oxides Emission Rate (g/bHp-hr)
Pbar	=	Barometric pressure ("Hg)
Ps	=	Absolute stack pressure ("Hg)
Pstd	=	Standard pressure (29.92"Hg)
Q	=	Duct volumetric flow rate (actual cfm)
Qstd	=	Duct volumetric flow rate (scfm)
Qstd(dry)	=	Duct volumetric flow rate (dscfm)
Tm	=	Absolute temperature at meter (^oR)
Ts	=	Absolute temperature of duct gas (^oR)
Tstd	=	Standard temperature (528^oR)
Vd	=	Duct velocity at a traverse point (ft/s)

Vm	=	Dry test meter volume (cf)
Vm(std)	=	Dry test meter volume at standard conditions (scf)
Vwc(std)	=	Volume of water vapor condensed at standard conditions (scf)
Wf	=	Final weight of impinger/absorber train (g)
Wi	=	Initial weight of impinger/absorber train (g)
Y	=	Dry test meter calibration factor (unitless)
%CO2	=	Duct gas carbon dioxide content (%volume)
%CO	=	Duct gas carbon monoxide content (%volume)
%N2	=	Duct gas nitrogen content (%volume)
%O2	=	Duct gas oxygen content (%volume)
ΔH	=	Pressure drop across orifice ("H2O)
ΔP	=	Pressure drop across pitot tube ("H2O)

APPENDIX E

PROCESS OPERATING DATA

Derenzo and Associates, Inc.

Seminole Energy Unit 4 (EU-005) Operating Data
March 22, 2012

	CEM Time	Kw	Fuel Flow
Test 1	9:55 - 10:55	1632	669
Test 2	11:45 - 12:45	1616	678
Test 3	13:45 - 14:45	1628	673

Time	Gen kW	Gen Fuel Flow	Plant Fuel Flow	Plant kW
9:55	1648	689	1302	2977
10:10	1644	663	1284	3099
10:25	1636	677	1270	2982
10:40	1613	649	1284	2987
10:55	1620	669	1273	2965
11:10	1616	667	1277	3007
11:25	1608	673	1305	3012
11:40	1605	681	1294	2940
11:45	1619	675	1280	3011
12:00	1608	663	1293	2992
12:15	1610	688	1287	3087
12:30	1627	680	1276	3025
12:45	1615	684	1300	3062
13:00	1618	679	1292	2982
13:15	1632	676	1288	3047
13:30	1617	674	1278	3033
13:45	1611	661	1305	3089
14:00	1623	669	1299	3013
14:15	1638	684	1282	2974
14:30	1641	672	1275	3051
14:45	1629	679	1284	3077

APPENDIX F

DETAILED DESCRIPTIONS OF SAMPLING PROCEDURES

INSTRUMENT SAMPLING AND CALIBRATION PROCEDURES

1.0 Extractive Gas Sampling System for Instrumental Analyzers

The extractive gas sampling system that serves the instrumental analyzers used for Methods 3A, 7E, 10 and Alt 078 is configured as described below.

Sample probe - Stainless steel single opening probe placed at the required sampling location.

Three-way valve - A stainless steel three-way valve is installed between the sample probe and a stainless steel particulate filter to allow the introduction of calibration gases into the sampling system. The three-way valve is turned toward the desired gas flow direction during this sampling. During system bias checks, excess calibration gas exits the sampling probe tip to avoid the introduction of process gas or ambient air during calibration.

Tee and poppet check valve - A stainless steel "Tee" was installed between the sample probe and a stainless steel particulate filter to allow the introduction of calibration gases through a stainless steel 10 psig poppet check valve into the sampling system. When sampling, the poppet check valve is normally closed, though upon the introduction of pressurized (i.e. > 10 psig) calibration gases from a remote

Teflon® line to the poppet check valve, the check valve opens and allows the calibration gases to be introduced near the base of the sample probe. During this dynamic calibration (or sampling system bias check) procedure, excess calibration gas exits the sampling probe tip to avoid the introduction of process gas during calibration.

Heated sample line – A heated Teflon® line is used to transport the sample gas from the stack to the instrument rack. The heated Teflon® line is equipped with a temperature controller which maintains the temperature of the sample line at approximately 250°F to prevent moisture condensation.

Sample pump and flow control valve – A single head 100% oil-free vacuum pump fitted with a stainless steel flow control valve is used to transfer sampled gases from the heated sample line to the instrumental analyzer. The vacuum pump is leak-free and non-reactive to the gases being sampled. Subsequent sample transport lines and fittings are either stainless steel or Teflon®.

Gas Conditioner – thermal-electric based condenser equipped with a peristaltic pump is used to remove moisture from the sampled gas stream that is directed to the instrumental analyzers, which require a conditioned (or dry) gas samples. From the moisture removal system, a sample gas manifold constructed of Teflon® transport lines and stainless steel Tee fittings is used to continuously deliver the sampled gas to the instrumental analyzers. Since the instrumental analyzers are equipped with internal sampling pumps, the end of the sample gas manifold is equipped with an atmospheric dump (or bypass discharge vent) to avoid over pressurization of the instrumental analyzers.

Data Logger – A data logging system is used to record 1-minute average data from the analog output of the instrumental analyzers.

2.0 Instrumental Analyzer Quality Assurance / Calibration Procedures

Upon site arrival, the instrumental analyzers are set-up in accordance with the manufacturer's written recommended procedures. Upon setting the appropriate range for the instrument, zero and appropriate

span gases are introduced sequential order to verify instrument accuracy (three-point analyzer calibration error test).

Prior to the first test run, appropriate upscale and low-range (zero) span gases are introduced in series at the three-way valve in the sampling system. This dynamic calibration procedure is the sampling system bias check, and the analyzer's response time is recorded.

The start of the test run occurs when the calibration gases are cleared from the sampling system and the data acquisition system records a consistent instrumental analyzer response on the stack gas sample (at least twice the system response time is allowed to verify representative readings).

At the conclusion of the sampling period, an appropriate upscale and low-range (zero) gases are re-introduced in series at the three-way valve in the sampling system to check against the method's performance specifications for calibration drift and zero drift error. If the drift error is within 3% of the span over the period of the test run, the test run will be considered acceptable.

Calibration gas dilution equipment

A STEC Model SGD-SC-5L five-step gas divider may potentially be used to obtain appropriate calibration span gases in the field, as necessary. The five-step gas divider is National Institute of Standards and Technology (NIST)-certified for primary flow standards in accordance with USEPA Method 205. When cut with an appropriate zero gas, the five-step gas divider delivers calibration gas values at 0, 20, 40, 60, 80, and 100% of the introduced USEPA Protocol 1 calibration gas. The field evaluation procedures described in Section 3.2 of USEPA Method 205 will be performed prior to the compliance testing program, in order to validate the use of the five-step gas divider.

3.0 Evacuated Canister Sampling System and Procedures for LFG Chlorine Content

An evacuated SUMMA passivated sampling canister was utilized to sample the landfill gas for chlorine analysis. The canister was conditioned in accordance with US EPA Method TO-15 guidelines, which includes evacuation of the canister to within 10mm of absolute pressure and allowing the canister to sit for 30 minutes. The tank was acceptable if no change more than ± 2 mm is noted. The leak check value was included in the results report. The canister is then pre-charged with Helium for shipment purposes so that the samples will not be considered hazardous.

Sampling was conducted at a flow rate equivalent to filling the remainder of the canister so that it is approximately 80% full at the completion of the testing. Sampling was conducted at a flow rate of 50 – 70 cc/min. All sample train components consist of Teflon and stainless steel. The samples were clearly and uniquely marked prior to shipment. Chain-of-custody forms were prepared prior to departing the test site. Sample analysis shall be conducted using Air Toxics, LTD.

4.0 Exhaust Gas Moisture Determination - USEPA Method 4 Chilled Impinger

The moisture content of the IC Engine exhaust gas was determined in accordance with the USEPA Method 4 chilled impinger method. A gas sample was e extracted at a constant rate from the source and bubbled through a condenser where moisture will be removed from the sample stream, and determined gravimetrically.

The moisture sampling train consisted of a non-heated probe connected to the first chilled impinger by a sufficient length of tubing. The impinger train consisted of four (4) impingers, connected in series and immersed in an ice bath. Crushed ice was placed around the impingers to keep the temperatures of the

gases leaving the last impinger at 68 °F or less. Each impinger was weighed gravimetrically before and after each test to determine the net moisture gain. The impinger train was constructed and charged as follows:

modified Greensburg-Smith (G-S) impinger containing 100 ml of distilled water;
standard G-S impinger containing 100 ml of distilled water;
modified G-S impinger, dry, to serve as a knockout; and;
modified G-S impinger containing approximately 200 - 300 grams of pre-dried silica gel and glass fiber.

An umbilical line was used to connect the sample probe and impinger train to the Nutech® Metering System. The umbilical line includes type K thermocouples, used to measure the impinger outlet.

A Nutech® Metering System was used to maintain a constant sampling rate. The system consists of a vacuum gauge, leak-free carbon vane pump, calibrated dry gas meter and thermocouples. The thermocouples were connected to a digital thermometer that displays temperature readings from the thermocouples on the umbilical line and dry gas meter.

Prior to each test run, the moisture sampling train was assembled and leak-checked at the sampling site by plugging the inlet to the probe and pulling a vacuum of approximately 15 in. Hg. At the conclusion of the test run, a post test leak check was performed by drawing a vacuum equal to or greater than the highest vacuum measured during the test run.

During sampling, a single representative sample location was used in lieu of collecting the sample across the velocity traverse profile. At 5-minute intervals, sampling train data was recorded. An aneroid-type barometer was used to measure the barometric pressure of the ambient air. All sampling data were recorded on field data sheets. Percent moisture was calculated using the measured mass gain of the impingers along with the metering console and calibration data.

5.0 Tedlar Bag Sampling Procedures for SO2 Emission Factor

Samples of the fuel gas were obtained into a tedlar bag by purging the Teflon sample line and introducing the gad directly into the bag. The fuel feed was under pressure limiting any potential for dilution. Upon conclusion of the bag sampling the valve was securely closed and the bag will be placed in a rigid metal container for shipment.

APPENDIX G

RAW INSTRUMENTAL ANALYZER RESPONSE DATA

Seminole Energy March 21, 2012 CEM Data

Date	Hour	O2%	Date	Hour	O2%
3/21/2012	11:30	20.97	3/21/2012	12:11	12.52
3/21/2012	11:31	20.98	3/21/2012	12:12	12.51
3/21/2012	11:32	14.39	3/21/2012	12:13	9.97
3/21/2012	11:33	12.67	3/21/2012	12:14	8.41
3/21/2012	11:34	12.55	3/21/2012	12:15	8.34
3/21/2012	11:35	12.52	3/21/2012	12:16	8.32
3/21/2012	11:36	9.46	3/21/2012	12:17	2.43
3/21/2012	11:37	8.4	3/21/2012	12:18	0.22
3/21/2012	11:38	8.34	3/21/2012	12:19	0.01
3/21/2012	11:39	7.92	3/21/2012	12:20	0
3/21/2012	11:40	0.84	3/21/2012	12:21	0.45
3/21/2012	11:41	0.14	3/21/2012	12:22	11.3
3/21/2012	11:42	0.01	3/21/2012	12:23	12.4
3/21/2012	11:43	4.58	3/21/2012	12:24	12.54
3/21/2012	11:44	20.08	3/21/2012	12:25	12.57
3/21/2012	11:45	20.79	3/21/2012	12:26	8.3
3/21/2012	11:46	20.95	3/21/2012	12:27	0.53
3/21/2012	11:47	20.99	3/21/2012	12:28	0.12
3/21/2012	11:48	21	3/21/2012	12:29	0.01
3/21/2012	11:49	20.88	3/21/2012	12:30	0.01
3/21/2012	11:50	13.69	3/21/2012	12:31	9.73
3/21/2012	11:51	12.65	3/21/2012	12:32	12.38
3/21/2012	11:52	12.55	3/21/2012	12:33	12.55
3/21/2012	11:53	12.53	3/21/2012	12:34	12.59
3/21/2012	11:54	12.52	3/21/2012	12:35	6.11
3/21/2012	11:55	9.25	3/21/2012	12:36	0.42
3/21/2012	11:56	8.4	3/21/2012	12:37	0.07
3/21/2012	11:57	8.34	3/21/2012	12:38	0
3/21/2012	11:58	6.68	3/21/2012	12:39	0
3/21/2012	11:59	0.48	3/21/2012	12:40	4.76
3/21/2012	12:00	0.09	3/21/2012	12:41	12.22
3/21/2012	12:01	0.01	3/21/2012	12:42	12.53
3/21/2012	12:02	1.6	3/21/2012	12:43	12.61
3/21/2012	12:03	19.41	3/21/2012	12:44	6.23
3/21/2012	12:04	20.72	3/21/2012	12:45	0.42
3/21/2012	12:05	20.91	3/21/2012	12:46	0.08
3/21/2012	12:06	20.97	3/21/2012	12:47	0
3/21/2012	12:07	20.28	3/21/2012	12:48	0.19
3/21/2012	12:08	13.15	3/21/2012	12:49	10.1
3/21/2012	12:09	12.63	3/21/2012	12:50	0.81
3/21/2012	12:10	12.54	3/21/2012	12:51	0.23
			3/21/2012	12:52	0.04

		NMHC	NOX	NO	NO2	CO	CO2	O2
Test 1	9:55 - 10:55	34.48	66.85	16.44	50.67	594.39	11.97	7.32
Test 2	11:45 - 12:45	34.43	68.65	9.13	59.77	594.21	11.92	7.34
Test 3	13:45 - 14:45	34.45	69.19	6.72	62.75	593.18	11.89	7.36

Date	Hour	NMHC	NOX	NO	NO2	CO	CO2	O2
3/22/2012	8:00	-0.01	1.56	0.34	1.38	15.14	0.09	2.15
3/22/2012	8:01	-0.01	1.4	0.43	0.99	15.43	0.08	19.58
3/22/2012	8:02	-0.01	0.97	0.34	0.88	15.13	0.07	20.67
3/22/2012	8:03	-0.01	0.97	0.35	0.89	14.15	0.06	20.87
3/22/2012	8:04	-0.01	0.96	0.34	0.89	0.49	0	21
3/22/2012	8:05	-0.01	0.66	0.35	0.88	0.46	0	19.04
3/22/2012	8:06	-0.01	0.46	0.34	0.58	0.28	0	9.02
3/22/2012	8:07	-0.01	0.47	0.35	0.39	0.27	0	8.49
3/22/2012	8:08	-0.01	0.46	0.34	0.39	0.42	0	8.38
3/22/2012	8:09	-0.01	0.46	0.35	0.39	0.36	0	8.36
3/22/2012	8:10	-0.01	0.47	0.35	0.39	0.02	0	8.35
3/22/2012	8:11	-0.01	0.46	0.34	0.39	0	0	5.6
3/22/2012	8:12	-0.01	123.11	125.57	3.51	0.15	0	0.39
3/22/2012	8:13	-0.01	197.98	197.37	0.81	0.04	0	0.06
3/22/2012	8:14	-0.01	199.34	199.6	0	0.35	0	0.01
3/22/2012	8:15	-0.01	199.27	198.77	0.67	0.52	0	0.01
3/22/2012	8:16	-0.01	99.38	107.56	-1.43	0.32	0	0.01
3/22/2012	8:17	-0.01	78.63	77.95	0.88	0.21	0	0.01
3/22/2012	8:18	-0.01	78.61	77.95	0.88	212.81	0	0.01
3/22/2012	8:19	-0.01	38.73	41.05	-0.99	1061.67	0	0.01
3/22/2012	8:20	-0.01	1.05	0.44	0.88	981.03	0	0.01
3/22/2012	8:21	-0.01	0.96	0.35	0.88	976.12	0	0.01
3/22/2012	8:22	-0.01	0.81	0.34	0.49	797.33	0	0.01
3/22/2012	8:23	-0.01	0.46	0.35	0.38	782.92	0	0.01
3/22/2012	8:24	-0.01	0.46	0.35	0.39	763.7	0.17	0.01
3/22/2012	8:25	-0.01	0.46	0.35	0.39	70.61	21.03	0.01
3/22/2012	8:26	-0.01	0.46	0.35	0.39	4.47	22.84	0.01
3/22/2012	8:27	-0.01	0.46	0.35	0.39	3.9	22.85	0.01
3/22/2012	8:28	-0.01	0.46	0.35	0.39	0.57	15.94	0.01
3/22/2012	8:29	-0.01	0.46	0.35	0.39	0.4	13.65	0.01
3/22/2012	8:30	-0.01	0.46	0.35	0.39	0.44	13.65	0.01
3/22/2012	8:31	-0.01	0.46	0.35	0.39	0.26	13.65	0.01
3/22/2012	8:32	-0.01	0.47	0.35	0.39	0.21	12.51	0.04
3/22/2012	8:33	-0.01	12.18	1.07	11.39	0.04	0.62	0.3
3/22/2012	8:34	-0.01	39.11	1.85	37.53	-0.01	0.12	0.29
3/22/2012	8:35	-0.01	49.82	1.85	48.33	-0.13	0.09	0.29
3/22/2012	8:36	-0.01	50.13	1.77	48.88	0.2	0.07	0.29
3/22/2012	8:37	-0.01	50.56	1.35	49.22	-0.05	0.05	0.29
3/22/2012	8:38	-0.01	50.56	1.34	49.48	-0.1	0.04	0.29
3/22/2012	8:39	-0.01	50.72	1.35	49.48	-0.14	0.03	0.29
3/22/2012	8:40	-0.01	51.06	1.35	49.64	-0.15	0.02	0.29
3/22/2012	8:41	0	51.06	1.35	49.98	-0.09	0.01	0.29
3/22/2012	8:42	0	51.06	1.35	49.98	-0.2	0	0.29
3/22/2012	8:43	0	51.06	1.35	49.98	-0.03	0	0.29
3/22/2012	8:44	0	51.06	1.35	49.98	-0.13	0	0.29
3/22/2012	8:45	-0.01	51.29	1.35	49.98	-0.03	0.03	0.28
3/22/2012	8:46	-0.01	28.83	0.95	27.98	-0.14	0	0.01
3/22/2012	8:47	-0.01	1.82	0.35	1.65	-0.11	0	0.01
3/22/2012	8:48	-0.01	1.22	0.35	1.14	-0.07	0	0.01
3/22/2012	8:49	-0.01	0.97	0.35	0.88	-0.21	0	0.01
3/22/2012	8:50	0	0.97	0.35	0.89	-0.04	0	0.01
3/22/2012	8:51	-0.01	45.29	39.64	7.09	0.07	0	0.01
3/22/2012	8:52	-0.01	79.27	77.37	2.06	-0.08	0	0.01
3/22/2012	8:53	-0.01	79.11	78.29	1.14	-0.14	0	0.01
3/22/2012	8:54	-0.01	79.69	75.03	4.9	35.05	0.42	1.23
3/22/2012	8:55	-0.01	12.56	15.45	-1.45	-0.01	0	0.11
3/22/2012	8:56	0.43	1.71	0.84	1.05	-0.17	0	0.01
3/22/2012	8:57	0.79	1.29	0.84	0.8	0.08	0	0.01
3/22/2012	8:58	0.62	58.49	57.51	2.73	-0.08	0	0.01
3/22/2012	8:59	0.59	78.44	79.03	-0.61	-0.02	0	0.01

Date	Hour	NMHC	NOX	NO	NO2	CO	CO2	O2
3/22/2012	9:00	0.59	78.62	79.37	-0.61	-0.01	0	0.01
3/22/2012	9:01	0.48	78.6	79.36	-0.61	-0.05	0	0.01
3/22/2012	9:02	0.38	78.35	78.78	-0.2	353.89	0	0.01
3/22/2012	9:03	8.08	17.48	20.45	-0.03	778.33	0	0.01
3/22/2012	9:04	9.41	1.04	0.84	0.87	779.6	0	0.01
3/22/2012	9:05	0.58	0.95	0.51	0.54	780.67	0	0.01
3/22/2012	9:06	0.5	0.95	0.34	0.38	780.69	0	0.01
3/22/2012	9:07	0.38	0.96	0.35	0.38	780.28	0	0.01
3/22/2012	9:08	0.38	0.95	0.34	0.38	780.24	0	0.01
3/22/2012	9:09	0.38	0.95	0.34	0.38	781.03	0	0.01
3/22/2012	9:10	0.38	2.06	0.74	1.18	311.95	7.02	0.29
3/22/2012	9:11	0.38	1.26	1.27	0.07	1.63	13.37	0.01
3/22/2012	9:12	0.38	0.95	0.34	0.38	1	13.45	0.01
3/22/2012	9:13	0.37	0.95	0.34	0.38	0.61	13.48	0.01
3/22/2012	9:14	0.38	0.52	0.34	0.38	0.69	13.5	0.01
3/22/2012	9:15	0.38	0.53	0.34	0.38	0.14	12.41	0.2
3/22/2012	9:16	0.38	0.44	0.34	0.38	0.06	0.69	7.24
3/22/2012	9:17	0.38	0.44	0.34	0.38	-0.15	0.12	8.21
3/22/2012	9:18	0.38	0.45	0.34	0.38	0.09	0.08	8.32
3/22/2012	9:19	0.38	0.46	0.34	0.39	0.09	0.06	8.35
3/22/2012	9:20	0.38	0.46	0.34	0.39	0.07	0.04	8.36
3/22/2012	9:21	0.38	0.45	0.34	0.38	-0.04	0.03	8.21
3/22/2012	9:22	0.38	0.46	0.34	0.39	-0.19	0.02	1.23
3/22/2012	9:23	0.38	0.45	0.34	0.39	-0.08	0.01	0.25
3/22/2012	9:24	0.38	0.46	0.34	0.39	-0.21	0	0.05
3/22/2012	9:25	0.38	0.46	0.34	0.39	-0.11	0	0.01
3/22/2012	9:26	0.37	0.45	0.34	0.38	-0.16	0	0.23
3/22/2012	9:27	0.18	0.45	0.34	0.38	-0.07	0	16.39
3/22/2012	9:28	0.18	0.44	0.33	0.38	0.24	0	20.81
3/22/2012	9:29	60.91	0.45	0.34	0.37	-0.07	0	21.1
3/22/2012	9:30	83.04	0.44	0.33	0.37	0.02	0	21.18
3/22/2012	9:31	83.8	0.45	0.34	0.38	0.87	0.01	21.19
3/22/2012	9:32	92.93	0.53	0.34	0.54	0.08	0	21.07
3/22/2012	9:33	109.87	0.44	0.34	0.37	-0.05	0	21.02
3/22/2012	9:34	72.2	0.45	0.34	0.38	0.4	0	21.01
3/22/2012	9:35	51.92	0.45	0.34	0.38	0.15	0	21.02
3/22/2012	9:36	52.3	0.45	0.34	0.38	-0.06	0	21.02
3/22/2012	9:37	52.22	0.44	0.34	0.37	0.02	0	21.02
3/22/2012	9:38	51.92	0.45	0.34	0.38	-0.05	0	21.02
3/22/2012	9:39	52.03	0.44	0.34	0.38	0.13	0	21.02
3/22/2012	9:40	52.12	0.45	0.33	0.38	0.08	0	20.99
3/22/2012	9:41	52.29	0.44	0.34	0.38	0.16	0	20.92
3/22/2012	9:42	49.34	0.45	0.34	0.38	0.05	0	20.92
3/22/2012	9:43	34.47	0.44	0.34	0.37	-0.04	0	20.92
3/22/2012	9:44	34.47	0.44	0.33	0.37	0.06	0	20.93
3/22/2012	9:45	34.47	0.45	0.33	0.37	0.2	0	20.93
3/22/2012	9:46	34.47	0.44	0.33	0.38	0.31	0	20.93
3/22/2012	9:47	31.74	0.44	0.33	0.37	4.53	0.01	20.93
3/22/2012	9:48	31.2	9.52	5.87	3.67	513.69	9.51	11.69
3/22/2012	9:49	30.86	56.52	38.57	18.44	582.18	11.86	7.67
3/22/2012	9:50	32.27	58.85	33.45	25.64	593.51	11.93	7.44
3/22/2012	9:51	33.87	61.36	31.49	30.11	604.47	12	7.34
3/22/2012	9:52	34.02	63.04	34.34	28.91	597.1	11.99	7.33
3/22/2012	9:53	34.06	62.98	29.66	33.59	601.28	12	7.32
3/22/2012	9:54	33.87	66.92	30.56	36.41	597.73	12.01	7.32
3/22/2012	9:55	33.95	63.56	28.5	35.22	585.59	11.97	7.37
3/22/2012	9:56	34.07	61.68	27.08	34.9	599.89	12.01	7.33
3/22/2012	9:57	34.07	61.93	26.75	35.45	607.45	12.1	7.26
3/22/2012	9:58	34.07	63.88	26.23	37.75	597.14	12.03	7.31
3/22/2012	9:59	34.27	63.66	25.71	38.17	580.68	11.98	7.36

Date	Hour	NMHC	NOX	NO	NO2	CO	CO2	O2
3/22/2012	10:00	34.33	60.18	24.04	36.33	610.61	12.06	7.3
3/22/2012	10:01	34.47	67.81	24.53	43.59	605.19	12.05	7.28
3/22/2012	10:02	34.47	66.16	24.35	41.99	593.61	12.03	7.33
3/22/2012	10:03	34.47	63.9	22.11	42.04	583.35	11.99	7.35
3/22/2012	10:04	34.11	63.05	21.88	41.41	594.9	12.03	7.32
3/22/2012	10:05	34.16	65.05	21.28	44.01	598.17	12.04	7.29
3/22/2012	10:06	34.47	64.29	20.96	43.75	582.46	11.98	7.35
3/22/2012	10:07	34.37	64.11	19.86	44.6	587	11.99	7.35
3/22/2012	10:08	34.27	64.48	19.2	45.59	590.24	12.01	7.33
3/22/2012	10:09	34.6	63.22	19.52	43.74	598.28	12.03	7.31
3/22/2012	10:10	34.67	66.78	19.72	47.42	604.11	12.03	7.28
3/22/2012	10:11	34.67	66.77	19.37	47.57	590.36	11.99	7.33
3/22/2012	10:12	34.67	66.27	18.87	47.72	600.3	12.02	7.3
3/22/2012	10:13	34.67	67.5	18.14	49.6	598.66	12.01	7.31
3/22/2012	10:14	34.37	67.31	18.79	48.68	588.84	11.98	7.34
3/22/2012	10:15	34.28	65.16	17.15	48.25	594.91	11.98	7.32
3/22/2012	10:16	34.47	65.03	18.09	47.18	592.43	11.99	7.33
3/22/2012	10:17	34.54	65.51	17.35	48.35	615.17	12.03	7.28
3/22/2012	10:18	34.67	73.03	17.46	55.53	593.75	11.99	7.31
3/22/2012	10:19	34.67	68.24	17.12	51.19	582.04	11.94	7.35
3/22/2012	10:20	34.67	63.76	15.29	48.8	596.75	11.99	7.32
3/22/2012	10:21	34.48	65.68	16.52	49.48	584.02	11.94	7.35
3/22/2012	10:22	34.42	66.51	16.04	50.72	613.73	12.03	7.28
3/22/2012	10:23	34.27	69.98	15.98	54.33	594.59	11.96	7.32
3/22/2012	10:24	34.39	67.48	15.6	52.04	596.01	11.96	7.33
3/22/2012	10:25	34.47	68.1	14.7	53.64	582.45	11.94	7.36
3/22/2012	10:26	34.82	64.76	14.27	50.66	595.94	11.97	7.32
3/22/2012	10:27	34.75	67.28	14.52	53	586.82	11.93	7.33
3/22/2012	10:28	34.27	64.39	14.03	50.72	597.79	11.98	7.32
3/22/2012	10:29	34.37	68.55	14.24	54.68	598.88	11.97	7.3
3/22/2012	10:30	34.47	69.58	14.11	55.6	592.13	11.94	7.32
3/22/2012	10:31	34.31	67.16	13.57	53.81	574.76	11.91	7.38
3/22/2012	10:32	34.34	62.24	12.73	49.8	591.29	11.95	7.33
3/22/2012	10:33	34.87	65.62	14.03	51.84	600.92	11.96	7.3
3/22/2012	10:34	34.78	69.16	14.03	55.52	595.06	11.94	7.32
3/22/2012	10:35	34.67	68.16	13.02	55.57	593.08	11.95	7.32
3/22/2012	10:36	34.52	68.16	13.61	54.69	599.27	11.94	7.31
3/22/2012	10:37	34.46	69.45	12.77	57.11	593.54	11.94	7.32
3/22/2012	10:38	34.07	67.62	13.19	54.6	592.65	11.94	7.32
3/22/2012	10:39	34.27	66.37	12.77	53.9	596.87	11.93	7.31
3/22/2012	10:40	34.67	70.25	12.52	58.19	590.21	11.91	7.34
3/22/2012	10:41	34.67	68.84	12.73	56.36	609.72	11.96	7.29
3/22/2012	10:42	34.67	73.02	12.4	60.83	598.92	11.92	7.32
3/22/2012	10:43	34.29	69.59	12.44	57.5	597.3	11.92	7.33
3/22/2012	10:44	34.42	69.3	11.74	57.95	593.62	11.94	7.32
3/22/2012	10:45	34.87	67.93	11.57	56.7	580.05	11.87	7.36
3/22/2012	10:46	34.76	65.3	11.03	54.66	587.08	11.88	7.37
3/22/2012	10:47	34.67	67.64	11.4	56.53	593.23	11.92	7.32
3/22/2012	10:48	34.67	67.89	11.15	56.95	589.63	11.92	7.34
3/22/2012	10:49	34.67	68.68	11.26	57.75	585.71	11.87	7.34
3/22/2012	10:50	34.67	67.91	11.29	56.88	582.54	11.87	7.35
3/22/2012	10:51	34.67	67.75	10.99	56.94	591.06	11.89	7.35
3/22/2012	10:52	34.67	73	10.86	62.4	603.28	11.92	7.32
3/22/2012	10:53	34.51	72.6	11.43	61.35	595.47	11.91	7.33
3/22/2012	10:54	34.47	67.86	9.89	58.26	609.7	12	7.27
3/22/2012	10:55	34.47	71.98	11.22	61.07	598.36	11.92	7.29
3/22/2012	10:56	34.71	69.58	10.73	59.03	589.73	11.87	7.35
3/22/2012	10:57	35.07	68.9	10.37	58.95	338.76	7.63	10.78
3/22/2012	10:58	32.89	31.38	4.05	27.68	2.22	0.28	20.11
3/22/2012	10:59	2.39	8.15	1.24	7.08	1.69	0.19	20.55

Date	Hour	NMHC	NOX	NO	NO2	CO	CO2	O2
3/22/2012	11:00	1.85	4.86	0.84	4.28	0.95	0.16	20.66
3/22/2012	11:01	0.98	3.45	0.84	2.95	0.4	0.13	20.69
3/22/2012	11:02	0.71	2.75	0.84	2.26	0.59	0.11	20.7
3/22/2012	11:03	0.58	2.34	0.84	1.89	0.72	0.1	20.71
3/22/2012	11:04	0.97	1.98	0.46	1.59	0.23	0.08	20.72
3/22/2012	11:05	0.92	1.67	0.34	1.38	0.59	0.07	20.74
3/22/2012	11:06	0.78	1.46	0.34	1.38	0.06	0.06	20.71
3/22/2012	11:07	0.66	1.46	0.34	1.38	0.41	0.05	20.86
3/22/2012	11:08	0.58	1.16	0.34	0.91	-0.04	0.04	20.92
3/22/2012	11:09	30.72	0.96	0.34	0.87	-0.04	0.04	20.93
3/22/2012	11:10	34.15	0.96	0.34	0.88	0.17	0.03	20.93
3/22/2012	11:11	34.47	0.96	0.34	0.88	0.31	0.03	20.93
3/22/2012	11:12	34.47	0.96	0.34	0.88	8.26	0.11	20.9
3/22/2012	11:13	34.47	6.15	9.75	-1.89	7	0.21	6.83
3/22/2012	11:14	16.86	75.4	72.39	3.21	0.14	0.02	0.62
3/22/2012	11:15	0.38	78.11	78.84	-0.5	0.1	0.01	0.25
3/22/2012	11:16	0.38	78.11	79.03	-0.92	-0.14	0.01	0.07
3/22/2012	11:17	0.38	78.11	78.95	-1.12	32.55	0.07	0.04
3/22/2012	11:18	0.38	51.86	57.88	-1.62	734.05	0.05	0.07
3/22/2012	11:19	0.38	1.89	0.86	1.29	781.06	0.01	0.01
3/22/2012	11:20	0.38	0.99	0.36	0.87	781.72	0.01	0.01
3/22/2012	11:21	0.38	0.96	0.34	0.88	331.98	6.54	0.01
3/22/2012	11:22	0.38	0.96	0.35	0.88	2.05	13.29	0.01
3/22/2012	11:23	0.38	0.96	0.34	0.88	1.3	13.37	0.01
3/22/2012	11:24	0.38	0.96	0.34	0.87	0.93	13.41	0.01
3/22/2012	11:25	0.38	0.96	0.34	0.87	0.84	13.44	0.01
3/22/2012	11:26	0.38	0.96	0.34	0.87	0.3	13.46	0.01
3/22/2012	11:27	0.38	0.96	0.34	0.87	0.51	5.92	3.52
3/22/2012	11:28	0.38	0.96	0.34	0.87	0.74	0.19	8.07
3/22/2012	11:29	0.38	0.96	0.34	0.88	0.92	0.13	8.28
3/22/2012	11:30	0.38	0.81	0.34	0.88	0.86	0.1	8.33
3/22/2012	11:31	0.38	0.46	0.34	0.87	0.81	0.08	8.35
3/22/2012	11:32	0.38	0.46	0.34	0.88	0.91	0.07	8.35
3/22/2012	11:33	0.38	0.61	0.34	0.81	1.43	0.11	17.55
3/22/2012	11:34	0.47	0.96	0.42	0.62	0.76	0.1	20.47
3/22/2012	11:35	0.98	0.96	0.34	0.88	197.88	3.13	18.56
3/22/2012	11:36	15.96	31.22	22.12	9.27	605.74	11.78	8.08
3/22/2012	11:37	34.27	58.67	33.94	25.13	606.32	11.87	7.5
3/22/2012	11:38	33.97	63.94	28.45	35.75	591.17	11.86	7.41
3/22/2012	11:39	33.89	61.43	23.71	38.05	590.14	11.91	7.37
3/22/2012	11:40	34.07	62.5	23.53	39.22	590.78	11.91	7.36
3/22/2012	11:41	34.07	60.84	22.93	38.25	597.16	11.94	7.35
3/22/2012	11:42	34.07	62.57	19.79	43.19	603.57	11.95	7.34
3/22/2012	11:43	34.07	66.52	19.64	47.3	590.69	11.93	7.36
3/22/2012	11:44	34.07	62.93	16.67	46.5	586.74	11.92	7.38
3/22/2012	11:45	34.27	63.85	15.83	48.29	592.77	11.96	7.34
3/22/2012	11:46	34.33	66.29	15.04	51.66	590.23	11.95	7.36
3/22/2012	11:47	34.48	66.12	14.13	52.24	598.17	11.96	7.34
3/22/2012	11:48	34.11	67.44	14.14	53.59	588.55	11.93	7.38
3/22/2012	11:49	33.87	66.25	12.89	53.53	579.44	11.91	7.4
3/22/2012	11:50	34.42	63.1	13.02	50.42	598.12	11.97	7.35
3/22/2012	11:51	34.4	68.08	13.01	55.4	595.6	11.97	7.34
3/22/2012	11:52	34.07	66.7	12.33	54.39	587.9	11.92	7.39
3/22/2012	11:53	34.18	67.5	12.26	55.48	597.66	11.98	7.34
3/22/2012	11:54	34.28	67.26	11.39	56.06	589.77	11.95	7.36
3/22/2012	11:55	34.44	66.72	11.85	55.2	592.7	11.94	7.37
3/22/2012	11:56	34.48	68.07	10.54	57.72	594.78	11.96	7.35
3/22/2012	11:57	34.47	69.06	11.04	58.37	610.45	12.01	7.3
3/22/2012	11:58	34.47	73.97	11.43	62.8	591.29	11.94	7.34
3/22/2012	11:59	34.47	67.97	10.05	58.18	593.48	11.95	7.35

Date	Hour	NMHC	NOX	NO	NO2	CO	CO2	O2
3/22/2012	12:00	34.47	67.64	10.28	57.63	604.87	11.98	7.32
3/22/2012	12:01	34.45	71.56	10.33	61.47	601.35	11.95	7.32
3/22/2012	12:02	34.07	69.68	10.06	59.89	576.38	11.87	7.4
3/22/2012	12:03	34.28	64.58	9.18	55.91	603.07	11.97	7.34
3/22/2012	12:04	34.67	70.73	9.2	61.78	609.66	11.97	7.31
3/22/2012	12:05	34.41	73.1	10.11	63.24	590.7	11.92	7.35
3/22/2012	12:06	34.28	67.62	8.54	59.49	582.94	11.91	7.38
3/22/2012	12:07	34.29	66.92	8.52	58.74	593.09	11.94	7.34
3/22/2012	12:08	34.27	68.57	8.61	60.22	585.65	11.88	7.38
3/22/2012	12:09	34.27	68.5	8.44	60.32	599.39	11.94	7.34
3/22/2012	12:10	34.39	68.25	8.6	59.82	594.81	11.93	7.34
3/22/2012	12:11	34.47	69.76	8.44	61.74	593.89	11.92	7.35
3/22/2012	12:12	34.47	68.33	8.6	59.9	594.04	11.92	7.35
3/22/2012	12:13	34.51	68.17	8.19	60.15	598.63	11.95	7.33
3/22/2012	12:14	34.67	70.25	8.69	61.82	607.08	11.94	7.31
3/22/2012	12:15	34.97	71.26	8.77	62.74	578.57	11.86	7.39
3/22/2012	12:16	35.27	65.09	7.77	57.57	583.77	11.87	7.39
3/22/2012	12:17	34.95	67.25	8.27	59.32	596.97	11.91	7.34
3/22/2012	12:18	34.87	67.42	7.94	59.82	592.19	11.9	7.36
3/22/2012	12:19	34.87	70.25	7.94	62.41	592.55	11.88	7.37
3/22/2012	12:20	34.79	68.33	8.02	60.66	589.12	11.91	7.37
3/22/2012	12:21	34.67	66.75	7.43	59.57	593.57	11.9	7.35
3/22/2012	12:22	34.53	68.42	7.94	60.73	594.74	11.9	7.35
3/22/2012	12:23	34.48	68.58	7.35	61.32	599.94	11.93	7.34
3/22/2012	12:24	34.67	70.92	7.6	63.41	600.41	11.91	7.32
3/22/2012	12:25	34.67	74.93	8.27	66.83	578.96	11.87	7.35
3/22/2012	12:26	34.67	68.83	8.02	61.24	593.33	11.91	7.33
3/22/2012	12:27	34.54	70.76	7.85	63.17	597.79	11.91	7.32
3/22/2012	12:28	34.47	70.51	7.27	63.28	586.92	11.87	7.37
3/22/2012	12:29	34.28	69.06	7.26	62.04	590.41	11.89	7.35
3/22/2012	12:30	34.27	67.1	6.85	60.51	593.46	11.88	7.38
3/22/2012	12:31	34.27	67.75	7.02	60.91	595.3	11.94	7.34
3/22/2012	12:32	34.27	64.91	7.06	58.2	624.22	12.01	7.23
3/22/2012	12:33	34.27	80.02	8.94	71.42	578.31	11.88	7.3
3/22/2012	12:34	34.27	71.26	7.91	63.61	582.44	11.87	7.36
3/22/2012	12:35	34.3	70.72	7.11	63.87	584.5	11.87	7.37
3/22/2012	12:36	34.47	66.79	6.75	60.21	589.75	11.87	7.38
3/22/2012	12:37	34.47	69.21	6.95	62.19	599.23	11.91	7.35
3/22/2012	12:38	34.47	65.92	6.59	59.59	605.49	11.99	7.29
3/22/2012	12:39	34	66.18	7.27	59.15	615.18	11.97	7.25
3/22/2012	12:40	33.91	72.96	7.53	65.45	589.88	11.87	7.34
3/22/2012	12:41	34.27	69.15	7	62.49	585.99	11.86	7.37
3/22/2012	12:42	34.27	66.72	6.85	60.13	603.17	11.95	7.3
3/22/2012	12:43	34.27	71.44	6.85	64.85	594.11	11.91	7.32
3/22/2012	12:44	34.41	67.42	7.01	60.82	595.23	11.9	7.33
3/22/2012	12:45	34.46	69.97	6.94	63.28	604.55	11.94	7.3
3/22/2012	12:46	34.07	71.06	6.84	64.57	467.96	10.18	8.18
3/22/2012	12:47	25.31	43.63	4.68	38.94	8.53	0.49	19.43
3/22/2012	12:48	6.39	8.87	1	8	3.31	0.21	20.46
3/22/2012	12:49	4.57	5.21	0.84	4.73	3.07	0.18	20.61
3/22/2012	12:50	1.18	3.51	0.41	3.26	3.02	0.15	20.67
3/22/2012	12:51	0.91	2.69	0.34	2.53	2.74	0.13	20.68
3/22/2012	12:52	0.78	2.2	0.34	1.95	2.51	0.11	20.69
3/22/2012	12:53	0.59	1.97	0.34	1.87	2.05	0.1	20.7
3/22/2012	12:54	0.55	1.56	0.35	1.39	1.94	0.09	20.7
3/22/2012	12:55	0.4	1.5	0.35	1.4	2.07	0.08	20.76
3/22/2012	12:56	19.38	1.5	0.36	1.4	1.93	0.07	20.91
3/22/2012	12:57	33.9	1.5	0.35	1.4	2.42	0.06	20.91
3/22/2012	12:58	34.07	1.07	0.36	0.97	2.4	0.05	20.9
3/22/2012	12:59	34.13	1.14	0.89	0.5	13.68	0.28	11.61

Date	Hour	NMHC	NOX	NO	NO2	CO	CO2	O2
3/22/2012	13:00	34.28	1.5	0.47	1.28	2.21	0.05	0.8
3/22/2012	13:01	17.79	0.96	0.34	0.87	2.01	0.04	0.3
3/22/2012	13:02	0.2	0.99	0.35	0.89	2.01	0.04	0.09
3/22/2012	13:03	0.2	0.99	0.35	0.89	2.03	0.03	0.01
3/22/2012	13:04	0.19	0.98	0.35	0.89	1.93	0.03	0.01
3/22/2012	13:05	0.2	0.99	0.35	0.89	2.09	0.03	5.44
3/22/2012	13:06	0.2	0.99	0.35	0.89	2.18	0.02	8.16
3/22/2012	13:07	0.19	0.97	0.34	0.88	2.07	0.02	8.31
3/22/2012	13:08	0.18	0.95	0.34	0.87	1.87	0.02	8.34
3/22/2012	13:09	0.18	0.95	0.34	0.87	2.02	0.02	8.35
3/22/2012	13:10	0.18	0.95	0.34	0.87	2.08	9.94	3.13
3/22/2012	13:11	0.18	0.95	0.34	0.87	1.81	13.35	0.33
3/22/2012	13:12	0.18	0.95	0.34	0.87	1.64	13.42	0.08
3/22/2012	13:13	0.18	0.95	0.34	0.87	1.89	13.46	0.01
3/22/2012	13:14	0.18	0.96	0.34	0.87	1.86	13.48	0.01
3/22/2012	13:15	0.18	0.95	0.34	0.87	2.14	13.5	0.01
3/22/2012	13:16	0.18	0.95	0.34	0.87	409.31	7.32	0.01
3/22/2012	13:17	0.18	0.95	0.33	0.87	783.64	0.22	0.01
3/22/2012	13:18	0.18	0.95	0.34	0.87	785.02	0.16	0.01
3/22/2012	13:19	0.18	10.04	4.2	6.1	187.3	0.17	0.02
3/22/2012	13:20	0.18	75.76	68.51	7.38	4.24	0.1	0.01
3/22/2012	13:21	0.18	77.48	77.72	-0.22	3.31	0.09	0.01
3/22/2012	13:22	0.18	77.2	77.97	-0.62	3.07	0.07	0.01
3/22/2012	13:23	0.18	77.59	78.44	-0.62	2.89	0.06	0.01
3/22/2012	13:24	0.18	77.96	77.19	0.99	5.49	0.12	6.48
3/22/2012	13:25	1.89	21	15.49	5.83	7.39	0.17	19.6
3/22/2012	13:26	3.38	8.28	4.42	4.01	489.09	8.66	12.37
3/22/2012	13:27	32.53	54.53	13.43	41.25	594.79	11.89	7.63
3/22/2012	13:28	37.68	57.82	9.87	48.22	615.68	12	7.34
3/22/2012	13:29	37.68	71.83	11	60.92	607.26	11.98	7.26
3/22/2012	13:30	37.68	74.69	11.25	63.69	568.52	11.91	7.33
3/22/2012	13:31	37.68	69.58	9.78	60.05	571.13	11.92	7.33
3/22/2012	13:32	35.93	69.01	9.88	59.46	571.48	11.93	7.35
3/22/2012	13:33	34.07	68.34	9.34	59.33	573.72	11.92	7.36
3/22/2012	13:34	34.23	68.86	9.57	59.55	579.17	11.93	7.33
3/22/2012	13:35	34.29	68.86	9.01	59.93	632.28	12.04	7.3
3/22/2012	13:36	34.47	79.52	10	69.68	612.12	12.29	7.02
3/22/2012	13:37	34.39	79.87	11.63	68.48	592.96	12.21	7.04
3/22/2012	13:38	34.27	79	10.05	69.25	552.7	12.02	7.24
3/22/2012	13:39	34.13	68.97	8.8	60.36	572	12.01	7.25
3/22/2012	13:40	34.07	75.21	9.14	66.31	564.69	11.92	7.34
3/22/2012	13:41	34.27	68.55	7.91	60.89	571.11	11.93	7.38
3/22/2012	13:42	34.4	67.47	7.75	60.1	599.53	11.96	7.35
3/22/2012	13:43	34.67	70.95	7.95	63.2	596.85	11.95	7.36
3/22/2012	13:44	34.67	68.68	7.65	61.2	591.23	11.99	7.34
3/22/2012	13:45	34.67	64.66	6.91	57.96	619.82	12.08	7.24
3/22/2012	13:46	34.3	74.01	8.52	65.78	594.4	11.96	7.32
3/22/2012	13:47	34.36	69.73	7.43	62.64	585.52	11.93	7.37
3/22/2012	13:48	34.67	67.03	7.18	59.9	593.45	11.95	7.35
3/22/2012	13:49	34.56	69.62	7.59	62.11	607.69	11.98	7.32
3/22/2012	13:50	34.47	72.79	7.51	65.7	593.58	11.94	7.35
3/22/2012	13:51	34.47	67.91	7.72	60.52	581.78	11.9	7.37
3/22/2012	13:52	34.47	68.12	7.43	60.77	579.43	11.87	7.4
3/22/2012	13:53	34.47	66.71	7.05	59.9	591.58	11.89	7.39
3/22/2012	13:54	34.38	69.42	7.64	62.11	599.38	11.94	7.36
3/22/2012	13:55	34.27	67.33	6.72	60.69	616.93	12.03	7.29
3/22/2012	13:56	34.27	73.17	7.64	65.87	601.27	11.94	7.32
3/22/2012	13:57	34.31	71.84	7.35	64.74	602.79	11.94	7.34
3/22/2012	13:58	34.87	70.58	6.8	64.07	591.04	11.93	7.35
3/22/2012	13:59	34.64	69.37	6.84	62.82	591.02	11.89	7.36

Date	Hour	18.26	NOX	NO	NO2	CO	CO2	O2
3/22/2012	15:00	18.26	1.96	0.83	1.37	3.44	0.07	20.65
3/22/2012	15:01	18.26	1.47	0.35	1.37	3.33	0.06	20.66
3/22/2012	15:02	18.26	1.45	0.34	1.37	3.73	0.06	20.67
3/22/2012	15:03	18.26	1.45	0.34	1.37	3.21	0.05	20.68
3/22/2012	15:04	18.26	1.05	0.34	1.06	3.55	0.05	20.68
3/22/2012	15:05	18.26	1.35	0.57	0.96	3.77	0.05	20.76
3/22/2012	15:06	18.26	1.05	0.36	0.96	3.56	0.04	20.86
3/22/2012	15:07	18.26	0.95	0.34	0.87	2.99	0.04	20.87
3/22/2012	15:08	18.26	0.95	0.34	0.87	2.85	0.03	20.88
3/22/2012	15:09	18.26	0.95	0.34	0.87	3.05	0.03	20.87
3/22/2012	15:10	18.26	0.95	0.34	0.87	2.93	0.03	20.87
3/22/2012	15:11	18.26	0.95	0.34	0.87	2.06	0.03	20.87
3/22/2012	15:12	18.26	0.95	0.34	0.87	2.58	0.03	15.04
3/22/2012	15:13	18.26	0.95	0.34	0.87	3.24	0.02	1.02
3/22/2012	15:14	18.26	0.95	0.34	0.87	3.41	0.02	0.36
3/22/2012	15:15	18.26	0.95	0.34	0.87	3.54	0.02	0.13
3/22/2012	15:16	18.26	0.95	0.34	0.87	3.16	0.02	0.02
3/22/2012	15:17	18.26	0.95	0.34	0.87	3.02	0.01	0.01
3/22/2012	15:18	18.26	0.95	0.34	0.87	2.85	0.01	0.74
3/22/2012	15:19	18.26	0.95	0.34	0.87	3.03	0.01	7.72
3/22/2012	15:20	18.26	0.95	0.34	0.87	2.91	0.01	8.23
3/22/2012	15:21	18.26	0.95	0.34	0.87	2.81	0.01	8.31
3/22/2012	15:22	18.26	0.95	0.34	0.87	2.69	0.01	8.34
3/22/2012	15:23	18.26	0.95	0.35	0.88	2.79	0.01	8.35
3/22/2012	15:24	18.26	0.95	0.35	0.88	2.33	3.81	6.72
3/22/2012	15:25	18.26	0.95	0.36	0.88	2.48	13.07	0.84
3/22/2012	15:26	18.26	0.95	0.36	0.88	2.6	13.2	0.53
3/22/2012	15:27	18.26	0.95	0.36	0.88	2.79	13.28	0.41
3/22/2012	15:28	18.26	0.95	0.35	0.88	2.87	13.45	0.04
3/22/2012	15:29	18.26	0.95	0.36	0.88	2.14	13.48	0.01
3/22/2012	15:30	18.26	0.95	0.36	0.88	2.55	13.49	0.01
3/22/2012	15:31	18.26	0.95	0.36	0.88	2.21	13.5	0.01
3/22/2012	15:32	18.26	0.96	0.36	0.89	2.15	13.51	0.01
3/22/2012	15:33	18.26	0.95	0.36	0.88	2.56	13.52	0.01
3/22/2012	15:34	18.26	0.68	0.36	0.87	1.97	13.52	0.01
3/22/2012	15:35	18.26	0.44	0.36	0.88	1.89	13.52	0.01
3/22/2012	15:36	18.26	0.45	0.36	0.88	1.98	13.52	0.01
3/22/2012	15:37	18.26	0.45	0.36	0.88	1.81	13.52	0.01
3/22/2012	15:38	18.26	0.47	0.36	0.9	1.88	13.52	0.01
3/22/2012	15:39	18.26	0.44	0.36	0.88	1.92	13.52	0.01
3/22/2012	15:40	18.26	0.43	0.35	0.87	1.84	13.52	0.01
3/22/2012	15:41	18.26	0.44	0.36	0.87	1.92	13.52	0.01
3/22/2012	15:42	18.26	0.45	0.36	0.88	1.83	13.52	0.01
3/22/2012	15:43	18.26	0.43	0.36	0.87	2.02	13.51	0.01
3/22/2012	15:44	18.26	0.44	0.36	0.88	2.16	13.51	0.01
3/22/2012	15:45	18.26	0.44	0.36	0.88	2.02	13.04	0.1
3/22/2012	15:46	18.26	0.53	0.36	0.72	3.28	1.58	16.57
3/22/2012	15:47	18.26	0.96	0.37	0.88	3.09	0.6	20.02
3/22/2012	15:48	18.26	0.95	0.36	0.88	2.52	0.54	20.3
3/22/2012	15:49	18.26	0.87	0.36	0.89	3.17	3.98	16.8
3/22/2012	15:50	18.26	0.9	0.36	0.89	595.2	3.77	1.45
3/22/2012	15:51	18.26	0.45	0.36	0.89	782.32	0.16	0.35
3/22/2012	15:52	18.26	0.45	0.36	0.88	783.3	0.13	0.06
3/22/2012	15:53	18.26	0.45	0.36	0.88	713.31	0.11	0.05
3/22/2012	15:54	18.26	20.53	19.2	1.98	27.05	0.09	0.06
3/22/2012	15:55	18.26	77.29	75.56	2.06	5.29	0.08	0.01
3/22/2012	15:56	18.26	77.09	77.53	-0.08	3.59	0.07	0.01