RECEIVED

OCT 30 1998

BUREAU OF
AIR REGULATION

# PSD APPLICATION
# FOR
# NO. 3 FERTILIZER EXPANSION
# CARGILL FERTILIZER, INC.
# BARTOW, FLORIDA

Prepared For:

Cargill Fertilizer, Inc.
3200 Highway 60 West
Bartow, Florida 33830

Prepared By:

Golder Associates Inc.
6241 NW 23rd Street, Suite 500
Gainesville, Florida 32653

October 1998

9837551Y/F1

TABLE OF CONTENTS

TABLE OF CONTENTS

(Continued)

IN ORDER
FOLLOWING
PAGE PSD-37

LIST OF TABLES

LIST OF FIGURES



**LIST OF ATTACHMENTS**

# PART B

## PSD Report
## (Revised October 1998)

## 1.0 INTRODUCTION

Cargill Fertilizer, Inc., is proposing to modify the existing No. 3 Fertilizer Plant at its phosphate fertilizer manufacturing facility located in Bartow, Florida. The No. 3 Fertilizer Plant can produce Diammonium Phosphate (DAP) or Monoammonium Phosphate (MAP). The modifications will improve product quality and allow the No. 3 Fertilizer plant to increase the maximum production rate from 2,640 tons per day (TPD) [110 tons per hour (TPH)] of MAP/DAP to 3,000 TPD of MAP/DAP. As a result of this production rate increase, an increase in the actual particulate matter (PM), PM with an aerodynamic diameter of 10 microns or less ($PM_{10}$), sulfur dioxide ($SO_2$), fluoride (F) and other pollutant emissions will occur.

Based on the requested maximum emissions for the affected source, the proposed modification will constitute a major modification at a major stationary source under current federal and state air quality regulations. This report addresses the requirements of the prevention of significant deterioration (PSD) review procedures pursuant to rules and regulations implementing the Clean Air Act (CAA) Amendments of 1977. The Florida Department of Environmental Protection (FDEP) has PSD review and approval authority in Florida. Based on the PSD source applicability analysis, a PSD review is indicated for PM, $PM_{10}$, and F.

This application contains six additional sections. A complete description of the project, including air emission rates, is presented in Section 2.0. The air quality review requirements and new source review applicability of the project are discussed in Section 3.0.

Ambient monitoring requirements under PSD are addressed in Section 4.0. The best available control technology (BACT) analysis is presented in Section 5.0. The air quality impact analysis and impacts on soils, vegetation and visibility required as part of the PSD permitting process are addressed in Sections 6.0 and 7.0, respectively.

## 2.0 PROJECT DESCRIPTION

Cargill Fertilizer Inc., operates a phosphate fertilizer facility located west of Bartow, Florida (see Figure 2-1). Cargill is proposing to upgrade the existing No. 3 Fertilizer Plant to improve product quality and increase plant production. The plant has reached the point where production can not be increased with out extensive modifications.

The No. 3 Fertilizer Plant is currently operating under Permit No. AO53-169781, issued Dec. 22, 1989 (see attachments). The location of the No. 3 Fertilizer Plant at Cargill is shown in Figure 2-2, which is a plot plan of the Cargill facility (Source ID is "#3 DAP PLANT").

### 2.1 DESCRIPTION OF CURRENT PROCESS

Phosphate fertilizers are manufactured at the No. 3 Fertilizer Plant (a flow diagram of the existing MAP/DAP process is shown in Figure 2-3). The plant manufactures MAP/DAP by reacting phosphoric acid with anhydrous ammonia in a reactor. This slurry is fed to the granulator where granules of MAP/DAP are formed. The vapor/gases from the reactor and granulator are evacuated in individual ducting, but converge at the reactor/granulator acid venturi scrubber, where ammonia is recovered by spraying phosphoric acid into the unit. This solution is recovered and sent back to the reactor. The reactor/granulator acid scrubber is then evacuated into an intermediate tailgas scrubber and then into a final plant RGCV tailgas scrubber via a main blower fan and discharged into the plant common stack.

Next, much of the moisture in the MAP/DAP material is driven off in the dryer using heated air. This air/vapor stream is evacuated to the dryer acid scrubber, where most of the entrained particulate and ammonia vapor is recovered and returned to the process. The dryer acid scrubber is evacuated through the dryer ejector scrubber and then through the plant tailgas scrubber.

The fertilizer granules from the dryer are then sent through a series of screens where the desired product sized granule is separated from the oversized and undersized granules. These granules are then recycled with the oversized material crushed via chain mills. Dust from the screening operation is vented to the cooler/equipment vents scrubber.

Next, the temperature of the product sized granules is lowered in an air cooled rotary cooler. The air in the rotary cooler and the equipment vents are evacuated through the cooler/equipment vent acid scrubber and then through the plant tailgas scrubber. From the rotary cooler, the fertilizer passes through a bulk cooler and is then sent to storage in the No. 3 Shipping Plant.

The MAP/DAP reaction is carried out in a rotating cylindrical reactor-granulator. Fluoride emissions are evolved as a result of the chemical reaction. PM and $PM_{10}$ emissions result from the contact between the MAP/DAP material and the air passed through the granulator, dryer, and cooler, screens, bucket elevators, etc.

## 2.2 DESCRIPTION OF PROPOSED MODIFICATION

Cargill is proposing to increase MAP/DAP production to 3,000 TPD at the No. 3 Fertilizer Plant. A flow diagram of the proposed process is presented in Figure 2-4. Cargill is proposing the following physical modifications to the existing No. 3 Fertilizer Plant:

1. Replace reactor/granulator acid scrubber with larger venturi-cyclonic scrubber. This unit will recover ammonia and dust from the reactor and equipment vents, and will be called the Reactor/Vent (RV) acid scrubber.
2. Eliminate the intermediate reactor/granulator tailgas scrubber and dryer eject scrubber.
3. Replace the dryer acid scrubber with a larger venturi-cyclonic vessel.
4. Install new dryer dust cyclone.
5. Install new dryer tailgas scrubber to remove F emissions.
6. Install new dryer evacuation fan.
7. Convert the cooler/equipment vent acid scrubber to serve the rotary cooler only. This scrubber will use pond water as the scrubbing solution.
8. Convert the cooler/equipment vent dust cyclone to serve the equipment vents only.
9. Convert the dryer dust cyclone into a cooler dust cyclone.
10. Install a new venturi-cyclonic acid scrubber for the granulator.

Other changes may be identified as final engineering progresses on the plant upgrade

## 2.3 EMISSIONS AND STACK PARAMETERS

The No. 3 Fertilizer Plant at Cargill is currently subject to a PM emission limit of 30 lb/hr as specified in permit No. AO53-169781. The current fluoride emission limit for the No. 3 Fertilizer Plant is the lesser of 0.06 lb/ton $P_2O_5$ reacted based on 40 CFR 60, Subpart V, or 1.8 lb/hr. The current permit limitations for the No. 3 Fertilizer Plant at Cargill are summarized in Table 2-1.

The proposed permit limitations for the expanded MAP/DAP units are also presented in Table 2-1. It is proposed to reduce the current allowable limit for PM from 30.0 lb/hr to 11.6 lb/hr, or 0.19 lb/ton $P_2O_5$ input. Cargill also proposes an allowable fluoride emissions of 2.5 lb/hr, which equates to 0.041 lb/ton $P_2O_5$ input at the maximum process rate. The basis for these limits as BACT is presented in Section 5.0.

Stack parameters for both the current and expanded No. 3 Fertilizer Plant are presented in Table 2-2. The existing stack at Cargill serving the No. 3 Fertilizer Plant will be utilized for the expanded plant, except that the stack will be extended in height from 125 ft to 141 ft high. The stack parameters shown in Table 2-2 were used in the modeling analysis to determine the net increase in impacts due to the proposed expansion, as well as the total ambient impacts due to the expanded plant.

Burners with a maximum heat input of 40.0 MMBtu/hr will provide the dryer unit with heat. Natural gas and No. 6 residual oil with a maximum sulfur content of 1.5 percent are currently permitted as fuel sources for this unit. Cargill proposes the use of natural gas as primary fuel, and No. 6 residual fuel oil with a maximum sulfur content of 1.5 percent as a backup fuel. The maximum gas usage for the No. 3 Fertilizer plant will be approximately 40,000 scf/hr of natural gas. Natural gas is the primary fuel source and will be used most of the time. No. 6 fuel oil or better grade oil is proposed as a stand-by fuel in case of natural gas interruption.

Air emissions due to fuel combustion are presented in Table 2-3 for nitrogen oxides ($NO_x$), sulfur dioxide ($SO_2$), carbon monoxide (CO), and volatile organic compounds (VOC). Estimated emissions from fuel combustion were developed using factors specified in the Environmental Protection Agency's (EPA) Compilation of Air Pollution Emission Factors (AP-42) (see Attachment A). Emissions are presented for natural gas and No. 6 fuel oil use. Fuel oil use will be limited to 339,000 gallons per year. Current maximum operating hours for the No. 3 Fertilizer Plant are 8,760 hr/yr, and Cargill proposes no changes to the maximum hours of operation.

## 3.0 SOURCE APPLICABILITY

### 3.1 PSD REVIEW

#### 3.1.1 POLLUTANT APPLICABILITY

The Cargill Bartow facility is considered to be an existing major stationary facility because potential emissions of certain regulated pollutants exceed 100 TPY (for example, potential PM emissions currently exceed 100 TPY). As a result, PSD review is required for the proposed modification for each pollutant for which the net increase in emissions exceeds the PSD significant emission rates (i.e., a major modification; see Table 3-1).

The net increase in actual emissions due to the proposed expansion is shown in Table 3-2. Based on current federal and state PSD rules, the net increase in emissions is based upon comparing current actual emissions to future potential emissions from all affected emissions units. The "affected" emissions units for the proposed modification consist of the No. 3 Fertilizer Plant and any other upstream or downstream emissions units whose actual emissions would increase due to the proposed expansion. Potentially affected upstream emissions units include the sulfuric acid plants and molten sulfur handling system, and the phosphoric acid plant. Potentially affected downstream emissions units consist of the No. 3 Shipping Plant (MAP/DAP from the No. 3 Fertilizer Plant is shipped through the No. 3 Shipping Plant).

The phosphoric acid plant and associated fluosilicic acid (FSA) recovery operation at Bartow will be affected by the proposed expansion, since additional phosphoric acid will be required for the increased MAP/DAP production. The No. 3 Shipping Plant will also be affected since the amount of MAP/DAP product sent through the shipping unit will increase.

However, the sulfuric acid plants at Bartow will not be affected by the proposed No. 3 Fertilizer Plant expansion. Although the No. 3 Fertilizer Plant will use additional phosphoric acid, which requires additional sulfuric acid, Cargill currently purchases significant amounts of sulfuric acid from outside sources. For example, during the period July 1997 through the present (1-year period), Cargill Riverview imported 204,000 tons of

sulfuric acid, while the Cargill Bartow facility imported 251,000 tons of sulfuric acid. Together, the two plants purchased and imported 455,000 tons of sulfuric acid over the last year. Although a recently proposed increase in the sulfuric acid production rate at Cargill's Riverview plant could offset some of these purchases, Cargill will continue to purchase sulfuric acid. Therefore, the sulfuric acid plants at Bartow will continue to operate as in the past. A PSD review and BACT determination was previously conducted on the Bartow sulfuric acid plants in November 1995 (Permit No. AC53-271436; PSD-FL-229).

The increase in emissions associated with the phosphoric acid plant and the No. 3 Shipping Plant have been included in the PSD source applicability analysis, shown in Table 3-2. As shown, the increase in $PM/PM_{10}$ emissions is 51.7 TPY, and the increase in F emissions is 11.6 TPY. The increase in $PM/PM_{10}$ and F emissions exceed the PSD significant emission rates. Therefore, the proposed project is subject to PSD review for these pollutants.

### 3.1.2 AMBIENT MONITORING

Based upon the increase in emissions from Cargill's proposed project, a PSD preconstruction ambient monitoring analysis is required for $PM_{10}$ and F. However, if the increase in impacts of a pollutant is less than the *de minimis* monitoring concentration, then an exemption from the preconstruction ambient monitoring requirement may be granted for that pollutant. In addition, if an acceptable ambient monitoring method for the pollutant has not been established by EPA, monitoring is not required.

For $PM_{10}$, the maximum 24-hour impact due to the proposed expansion is 11.1 micrograms per cubic meter ($\mu g/m^3$) (refer to Section 6.0). The increase in impacts is above the *de minimis* monitoring concentration of 10 $\mu g/m^3$. As a result, the proposed modification cannot be exempted from the preconstruction monitoring requirements for PM. There is no *de minimis* monitoring concentration for F. As a result, preconstruction monitoring is not required for fluorides.

### 3.1.3 GEP STACK HEIGHT ANALYSIS

The GEP stack height regulations allow any stack to be at least 65 m [213 feet (ft)] high. The No. 3 Fertilizer plant at Cargill is an existing source with a stack less than 65 m. The stack height of the existing No. 3 Fertilizer plant is 125 feet and will be increased to 141 feet. As a result, the *de minimis* GEP stack height will not be exceeded.

### 3.1.4 BEST AVAILABLE CONTROL TECHNOLOGY

The federal PSD regulations as promulgated in 40 CFR 52.21(j)(3) states that BACT is applied only to those emission units that are being physically modified, or for which there is a change in the method of operation, due to the proposed project. The rule quote is provided below:

> "A major modification shall apply best available control technology for each pollutant subject to regulation under the Act for which it would result in a significant net emissions increase at the source. This requirement applies to each proposed emissions unit at which a net emissions increase in the pollutant would occur as a result of a physical change or change in the method of operation in the unit."

Therefore, BACT review only applies to the No. 3 Fertilizer Plant for the proposed expansion. A BACT determination is not required for the phosphoric acid plant or the No. 3 Shipping Plant as a result of the proposed project, even though they are required to be included in the PSD source applicability determination, since these emissions units are not undergoing a physical or operational change.

## 3.2 NON-ATTAINMENT REVIEW

The Cargill facility is located in Polk county, which has been designated as an attainment area for $PM_{10}$ and F. As a result, non-attainment review does not apply to the proposed project.

## 3.3 NEW SOURCE PERFORMANCE STANDARDS

Federal NSPS have been promulgated for new and modified DAP plants (40CFR 60, Subpart V). The NSPS currently apply to the Nos. 3 Fertilizer Plant, and will continue to apply in the future. The NSPS limit is 0.06 lb/ton $P_2O_5$ for F emissions.

# 4.0 AMBIENT MONITORING ANALYSIS

## 4.1 INTRODUCTION

In accordance with requirements of 40 CFR 52.21(m) and Rule 62-212.400(5)(f), F.A.C., any application for a PSD permit must contain an analysis of continuous ambient air quality data in the area affected by the proposed major stationary facility or major modification. For a new major facility, the affected pollutants are those that the facility potentially would emit in significant amounts. For a major modification, the pollutants are those for which the net emissions increase exceeds the significant emission rate.

Ambient air monitoring for a period of up to 1 year is generally appropriate to satisfy the PSD monitoring requirements. A minimum of 4 months of data is required. Existing data from the vicinity of the proposed source may be used if the data meet certain quality assurance requirements; otherwise, additional data may need to be gathered. Guidance in designing a PSD monitoring network is provided in EPA's Ambient Monitoring Guidelines for Prevention of Significant Deterioration (EPA, 1987).

An exemption from the preconstruction ambient monitoring requirements is also available if certain criteria are met. If the predicted increase in ambient concentrations due to the proposed modification is less than specified *de minimis* concentrations, then the modification can be exempted from the preconstruction air monitoring requirements for that pollutant.

The PSD *de minimis* monitoring concentration for $PM_{10}$ is 10 $\mu g/m^3$, 24-hour average. The predicted increase in $PM_{10}$ concentrations due to the proposed modification only are presented in Section 6.0. The predicted $PM_{10}$ increase is 11 $\mu g/m^3$, 24-hour average. Since the predicted increase in $PM_{10}$ impacts due to the proposed modification is greater than the *de minimis* monitoring concentration level, a preconstruction air monitoring analysis is required for $PM_{10}$. The analysis is presented in the following section.

## 4.2 $PM_{10}$ AMBIENT MONITORING BACKGROUND CONCENTRATIONS

### 4.2.1 VICINITY OF CARGILL

The PSD ambient monitoring guidelines allow the use of existing data to satisfy preconstruction review requirements and to develop background concentrations. "Background concentrations" are defined as concentrations due to sources other than those specifically included in the modeling analysis. For $PM_{10}$, background would include other point sources not included in the modeling (i.e., faraway sources or small sources), fugitive emission sources, and natural background sources.

Presented in Table 4-1 is a summary of existing ambient $PM/PM_{10}$ data for monitors located in the vicinity of Cargill's Bartow facility. Data are presented for the last 12 months of record in 1997. As shown the $PM_{10}$ monitor was operation in the vicinity of Cargill's Bartow facility during this period.

The monitoring data shows that ambient $PM_{10}$ concentrations were well below the ambient air quality standards of 150 $\mu g/m^3$, maximum 24-hour average, and 50 $\mu g/m^3$, annual average. For purposes of an ambient $PM_{10}$ background concentration for use in the modeling analysis, the annual average $PM_{10}$ concentration of 18 $\mu g/m^3$ was used. This concentration was utilized for both the 24-hour and annual average background $PM_{10}$ concentrations in the air quality impact analysis.

### 4.2.2 CHASSAHOWITZKA CLASS I AREA

Presented in Table 4-2 is a summary of existing ambient $PM/PM_{10}$ data for monitors located in the vicinity of the Chassahowitzka Class I area. One PM monitor was located adjacent to Chassahowitzka in Crystal River during 1996, and one $PM_{10}$ monitor was located directly in Chassahowitzka in 1996.

The monitors show that ambient $PM_{10}$ concentrations were well below the ambient air quality standards of 150 $\mu g/m^3$, maximum 24-hour average, and 50 $\mu g/m^3$, annual average. For purposes of an ambient $PM_{10}$ background concentration for use in the modeling analysis for the Class I area, the annual average $PM_{10}$ concentration of 20 $\mu g/m^3$ and the maximum

24-hour concentration of 49 $\mu g/m^3$ recorded at the Chassahowitzka monitor during 1996 was selected. This would represent a very conservative background concentration since this monitor would be influenced somewhat by point sources, such as the Florida Power Corp. Crystal River plant.

## 5.0 BACT ANALYSIS

### 5.1 REQUIREMENTS

The 1977 Clean Air Act Amendments established requirements for the approval of preconstruction permit applications under the PSD program. One of these requirements is that the best available control technology (BACT) be installed for applicable pollutants. BACT determinations must be made on a case-by-case basis considering technical, economic, energy, and environmental impacts for various BACT alternatives. To bring consistency to the BACT process, the EPA developed the so called "top-down" approach to BACT determinations. This approach has been challenged in court and a settlement agreement reached that requires EPA to initiate formal rulemaking on the "top-down" approach. However, EPA has not yet promulgated rules which address this approach. Nonetheless, in the absence of formal rules related to this approach, the "top-down" approach is followed in the Cargill BACT analysis.

The first step in a "top-down" BACT analysis is to determine, for each applicable pollutant, the most stringent control alternative available for a similar source or source category. If it can be shown that this level of control is not feasible on the basis of technical, economic, energy, or environmental impacts for the source in question, then the next most stringent level of control is identified and similarly evaluated. This process continues until the BACT level under consideration cannot be eliminated by any technical, economic, energy, or environmental consideration.

In the case of the proposed modification at Cargill, $PM/PM_{10}$ and fluoride require BACT analysis. The following sections presents the BACT analysis.

## 5.2 PROPOSED CONTROL TECHNOLOGY

The No. 3 Fertilizer Plant will be equipped with six scrubbers following the proposed modification. Four will be new scrubbers while two are existing. The scrubbers will be designed with the following operating parameters:

1. Reactor/Vents Acid Scrubber (new)

| | |
|---|---|
| Outlet Temperature | 185°F |
| Outlet Flow Rate | 72,700 ACFM |
| Pressure Drop | 15 in. $H_2O$ |
| Recovery Solution Flow Rate | 1,500 gpm |

2. Granulator Acid Scrubber (new)

| | |
|---|---|
| Outlet Temperature | 178°F |
| Outlet Flow Rate | 51,000 ACFM |
| Pressure Drop | 16 in. $H_2O$ |
| Recovery Solution Flow Rate | 800 gpm |

3. Cooler Venturi-Cyclonic Scrubber (existing)

| | |
|---|---|
| Outlet Temperature | 86°F |
| Outlet Flow Rate | 38,500 ACFM |
| Pressure Drop | 15 in. $H_2O$ |
| Water Flow Rate | 660 gpm |

4. R.G.C.V. Tailgas Scrubber (existing)

| | |
|---|---|
| Outlet Temperature | 139°F |
| Outlet Flow Rate | 152,900 ACFM |
| Pressure Drop | 4 in. $H_2O$ |
| Pond Water Flow Rate | 4,600 gpm |

5. Dryer Acid Scrubber (New)

| | |
|---|---|
| Outlet Temperature | 170°F |
| Outlet Flow Rate | 70,300 ACFM |
| Pressure Drop | 16 in. $H_2O$ |
| Recovery Solution Flow Rate | 1,250 gpm |

6. Dryer Tailgas Scrubber (new)

| | |
|---|---|
| Outlet Temperature | 157°F |
| Outlet Flow Rate | 70,000 ACFM |
| Pressure Drop | 5 in. $H_2O$ |
| Pond Water Flow Rate | 1,600 gpm |

Currently the existing scrubber system is achieving lower emission rates than required by permit AO53-169781 (i.e. 0.06 lb/ton $P_2O_5$ or 1.8 lb/hr). As shown in Table 5-1, emission rates range from 0.007 to 0.092 lb/ton $P_2O_5$ for PM and from 0.013 to 0.053 lb/ton $P_2O_5$ for F.

However, the increased production rate for the proposed modification will increase the loading to the scrubbers and as a result may increase emissions. Therefore, an emission limit of 0.19 lb/ton $P_2O_5$ for PM is proposed as the future limits. For fluorides, an emission limit of 2.5 lb/hr is proposed, equivalent to 0.041 lb/ton $P_2O_5$ input. These limits represent total emissions from all Process Recovery Units (PRU's) and wet scrubbers, as measured at the common stack.

### 5.3 BACT ANALYSIS FOR $PM/PM_{10}$

BACT for $PM/PM_{10}$ for the proposed No. 3 Fertilizer Plant is the proposed system consisting of two plant tailgas scrubbers using pond water, four venturi/cyclonic acid scrubbers recovering ammonia.

A review of previous BACT determinations for PM emissions from MAP plants and DAP plants was conducted. The results of this review is presented in Table 5-2. It is noted that determinations issued prior to 1991 are not included in Table 5-2.

As shown, the previous BACT determinations for MAP/DAP plants were all based on wet scrubber technology. This demonstrates that the two tailgas scrubbers and four venturi/cyclonic acid scrubbers, are the best control technology for application on the No. 3 Fertilizer Plant. Previous BACT determinations have resulted in emission limits ranging from 0.19 to 0.41 lb/ton $P_2O_5$ input for PM. The latest determination (IMC Agrico - New Wales; PSD-FL-241) resulted in an overall $PM/PM_{10}$ limit of 0.29 lb/ton $P_2O_5$. Cargill's proposed $PM/PM_{10}$ emission rate for the No. 3 Fertilizer Plant is 11.6 lb/hr is equivalent to 0.19 lb/ton $P_2O_5$ input and 0.093 lb/ton MAP/DAP produced.

A previous BACT determination for a DAP plant (IMC-Agrico- New Wales; PSD-FL-241) addressed alternatives for $PM/PM_{10}$ control. The alternatives addressed consisted of a high energy (>30 in.w.c) venturi scrubber and a medium-energy (15-30 in.w.c.) venturi scrubber. The IMC plant employs an existing medium-energy venturi scrubbing system. The high costs of adding a high-energy venturi scrubbing system was deemed economically infeasible with incremental cost effectiveness ranging from $50,000 to $75,000 per incremental ton of

$PM/PM_{10}$ removed. As a result, the high-energy venturi scrubber option was found to be infeasible, and the existing medium-energy venturi scrubber was selected as BACT.

Cargill currently employs medium-energy scrubbers on its No. 3 Fertilizer Plant, and the modified plant will also employ medium energy scrubbers. Similar to the above analysis, the use of high-energy scrubbers would not be cost effective. Therefore, medium-energy wet/venturi scrubber represents BACT for the Cargill No. 3 Fertilizer Plant. Since actual $PM/PM_{10}$ emissions from the No. 3 Fertilizer Plant have been well below the allowable emission rate of 30.0 lb/hr, Cargill is proposing to lower the allowable to 11.6 lb/hr, even considering the production rate increase.

## 5.4 BACT ANALYSIS FOR FLUORIDES

BACT for F emissions for the proposed No. 3 Fertilizer Plant is the proposed emissions control system consisting of two tailgas scrubbers and four venturi/cyclonic acid scrubbers.

A review of previous BACT determinations for F emissions from MAP and DAP plants was conducted. The results of this review is presented in Table 5-3. It is noted that determinations issued prior to 1991 are not included in Table 5-3.

As shown, the previous BACT determinations were all based on wet scrubber technology. This demonstrates that two tailgas scrubbers and four venturi/cyclonic acid scrubbers, are the best control technology for application on the No. 3 Fertilizer Plant. Previous BACT determinations for F emissions have resulted in emission limits ranging from 0.0417 to 0.06 lb/ton $P_2O_5$ input. Cargill's proposed F emission rate for the No. 3 Fertilizer Plant is 2.5 lb/hr, equivalent to 0.041 lb/ton $P_2O_5$ input.

A previous BACT determination for a DAP plant (IMC-Agrico- New Wales; PSD-FL-241) addressed alternatives for F control. The alternatives included a packed scrubber using either once-through fresh water, neutralized water from a dedicated pond (fresh water makeup), or process cooling pond water. The first option was dismissed due to concern over fresh water usage and plant water balance problems. The second option was dismissed

based on economics, with the cost effectiveness estimated at $14,000 per ton of F removed. In Cargill's case, the first two options can be dismissed based on similar considerations. This leaves the third option, using process cooling pond water in the scrubbers, as BACT.

## 6.0 AIR QUALITY IMPACT ANALYSIS

### 6.1 SIGNIFICANT IMPACT ANALYSIS

The general modeling approach followed EPA and FDEP modeling guidelines for determining compliance with ambient air quality standards (AAQS) and PSD increments. For all criteria pollutants that will be emitted in excess of the PSD significant emission rate due to a proposed project, a significant impact analysis is performed to determine whether the emission and/or stack configuration changes due to the project alone will result in predicted impacts that are in excess of the EPA significant impact levels at any location beyond the plant property boundaries. For the proposed Cargill project, $PM/PM_{10}$ are the only criteria pollutants emitted in excess of the PSD significant emission rates. Fluoride emissions were also modeled to support the air quality related values analysis, since fluorides are subject to PSD review.

Generally, if the facility undergoing the modification also is within 200 kilometers of a PSD Class I area, then a significant impact analysis is also performed for the PSD Class I area. Currently, the National Park Service (NPS) has recommended significant impact levels for PSD Class I areas. The recommended levels have not been promulgated as rules.

Current FDEP policies stipulate that the highest annual average and highest short-term (i.e., 24 hours or less) concentrations are to be compared to the applicable significant impact levels. Based on the screening modeling analysis results, additional modeling refinements with a denser receptor grid are performed, as necessary, to obtain the maximum concentration. Modeling refinements are performed with a receptor grid spacing of 100 meters (m) or less.

If the project's impacts are above the significant impact levels, then a more detailed air modeling analysis that includes background sources is performed. This consists of evaluating compliance with AAQS and PSD increments.

## 6.2 AAQS/PSD MODELING ANALYSIS

For each pollutant for which a significant impact is predicted, a refined impact analysis to demonstrate compliance with AAQS and PSD increments is required. This analysis must consider other nearby sources and background concentrations and predict concentrations for comparison to ambient standards. For the proposed project, a refined impact analysis is required for $PM_{10}$.

In general, when 5 years of meteorological data are used in the analysis, the highest annual and the highest, second-highest (HSH) short-term concentrations are compared to the applicable AAQS and allowable PSD increments. The HSH concentration is calculated for a receptor field by:

1. Eliminating the highest concentration predicted at each receptor,
2. Identifying the second-highest concentration at each receptor, and
3. Selecting the highest concentration among these second-highest concentrations.

This approach is consistent with AAQS and allowable PSD increments, which permit a short-term average concentration to be exceeded once per year at each receptor.

To develop the maximum short-term concentrations for the proposed project, the modeling approach was divided into screening and refined phases to reduce the computation time required to perform the modeling analysis. For this study, the only difference between the two modeling phases is the density of the receptor grid spacing employed when predicting concentrations. Concentrations are predicted for the screening phase using a coarse receptor grid and a 5-year meteorological data record.

If the original screening analysis indicates that the highest concentrations are occurring in a selected area(s) of the grid and, if the area's total coverage is too vast to directly apply a refined receptor grid, then an additional screening grid(s) will be used over that area. The additional screening grid(s) will employ a greater receptor density than the original screening grid, so refinements can be performed if necessary.

Refinements of the maximum predicted concentrations are typically performed for the receptors of the screening receptor grid at which the highest and/or HSH concentrations occurred over the 5-year period. Generally, if the maximum concentration from other years in the screening analysis are within 10 percent of the overall maximum concentration, then those other concentrations are refined as well. Typically, if the highest and HSH concentrations are in different locations, concentrations in both areas are refined.

Modeling refinements are performed for short-term averaging times by using a denser receptor grid, centered on the screening receptor to be refined. The angular spacing between radials is 1 degree and the radial distance interval between receptors is 100 m. Annual modeling refinements employ an angular spacing between radials of 1 degree and a distance interval from 100 to 300 m, depending on the concentration gradient in the vicinity of the screening receptor to be refined. If the maximum screening concentration is located on the plant property boundary, additional plant boundary receptors are input, spaced at a 1 degree angular intervals and centered on the screening receptor. The domain of the refinement grid will extend to all adjacent screening receptors. The air dispersion model is then executed with the refined grid for the entire year of meteorology during which the screening concentration occurred. This approach is used to ensure that a valid HSH concentration is obtained. A more detailed description of the model, along with the emission inventory, meteorological data, and screening receptor grids, is presented in the following sections.

### 6.2.1 MODEL SELECTION

The Industrial Source Complex Short-term (ISCST3, Version 97363) dispersion model (EPA, 1995) was used to evaluate the pollutant impacts due to the proposed modification to Cargill's No. 3 Fertilizer Plant. This model is maintained on the EPA's Technical Transfer Network (TTN) internet web site. A listing of ISCST3 model features in presented in Table 6-1. The ISCST3 model is applicable to sources located in either flat or rolling terrain where terrain heights do not exceed stack heights. The ISCST3 model is designed to calculate hourly concentrations based on hourly meteorological parameters (i.e., wind direction, wind speed, atmospheric stability, ambient temperature, and mixing heights).

In this analysis, the EPA regulatory default options were used in all model executions. Based on the land-use within a 3.5-km radius of the Cargill facility, the rural dispersion coefficients were used in the modeling analysis. The ISCST3 model was used to provide maximum concentrations for the annual and 24-hour averaging times.

### 6.2.2 METEOROLOGICAL DATA

Meteorological data used in the ISCST3 model to determine air quality impacts consisted of a concurrent 5-year period of hourly surface weather observations and twice-daily upper air soundings from the National Weather Service (NWS) stations at Tampa International Airport and Ruskin, respectively. The 5-year period of meteorological data was from 1987 through 1991. The NWS station at Tampa International Airport, located approximately 69 km to the northwest of the Cargill plant site, was selected for use in the study because it is the closest primary weather station to the study area that is representative of the plant site.

### 6.2.3 EMISSION INVENTORY

**Significant Impact Analysis**

The $PM_{10}$ emission rate increases and the physical and operational stack parameters for the No. 3 Fertilizer Plant are summarized in Table 6-2. These data are based on emission and stack parameter data presented in Tables 2-1, 2-2, and 3-2. For the $PM_{10}$ analysis, the modeled sources included the pre-modification No. 3 Fertilizer Plant stack, the post-modification No. 3 Fertilizer Plant stack, the Phosphoric Acid Plant stacks and the No. 3 Shipping Plant stack. These sources were modeled at locations relative to the No. 4 Fertilizer Plant stack, which is the modeling origin that has been used in previous PSD applications for the Cargill Bartow facility.

**AAQS Analysis**

The non-Cargill PM facilities that were considered in the air modeling analysis are provided in Attachment C, Table C-1. The competing source data were obtained from a modeling analysis performed for a PSD application for IMC-Agrico, a source in Polk County, provided to Golder by FDEP.

**PSD Class II Analysis**

Cargill's $PM_{10}$ PSD increment consuming sources are provided in Table 6-2. Non-Cargill PSD sources were obtained from the IMC-Agrico PSD analysis, provided to Golder by FDEP. The PSD source emission inventory is presented in Attachment C, Table C-2.

**PSD Class I Analysis**

Because the proposed No. 3 Fertilizer Plant expansion's maximum air impacts do not exceed the recommended NSPS significant impact levels for $PM_{10}$ at the Chassahowitzka NWA PSD Class I area, a PSD Class I increment consumption modeling assessment is not required. However, the proposed project's emissions of $SO_2$, $PM_{10}$, and $NO_x$ were evaluated at the Class I area in support of the regional haze analysis. Fluoride emissions were evaluated in support of the air quality related values (AQRV) analysis. Emissions of $SO_2$ and $NO_x$ from the proposed project, based on Table 2-3, are presented in Table 6-3. The AQRV analysis is presented in Section 7.0.

### 6.2.4 RECEPTOR LOCATIONS

**Site Vicinity**

To determine the $PM_{10}$ significant impact area for the proposed project, concentrations were predicted for 324 regular and 146 discrete polar grid receptors located in a radial grid centered on the No. 4 Fertilizer Plant stack. Receptors were located in "rings" with 36 receptors per ring, spaced at 10E intervals and at distances along the fence line 2.5, 3.0, 3.5, 4.0, 4.5, 5.0, 6.0, 7.0, and 8.0 km from the No. 4 Fertilizer Plant stack location. Discrete receptors were placed at 10E intervals along the plant property boundary and off-property receptors at distances of 1.5, 2.0, 2.5, 3.0, 3.5 and 4.0 km from the No. 4 Fertilizer Plant stack. The 18 property boundary receptors used for the screening analysis are presented in Table 6-4. Based on the results of the significant impact analysis, a maximum receptor distance of 3.3 km was used for the screening grid for the AAQS and PSD Class II analysis.

Class I Area

Maximum $PM_{10}$ impacts for the Chassahowitzka NWA were predicted at 13 discrete receptors located along the border of the PSD Class I area. Impacts for the proposed modification only were also compared to the Class I significance levels recommended by the National Park Service (NPS). A listing of Class I receptors is provided in Table 6-5.

### 6.2.5 BACKGROUND CONCENTRATIONS

To estimate total air quality concentrations in the site vicinity, a background concentration must be added to the modeling results. The background concentration is considered to be the air quality concentration contributed by sources not included in the modeling evaluation.

The derivation of the background concentration for the modeling analysis was presented in Section 4.0. Based on this analysis, the $PM_{10}$ background concentration was determined to be 18 $\mu g/m^3$ for the 24-hour and annual averaging periods. These background levels were added to model-predicted concentrations to estimate total air quality levels for comparison to AAQS.

### 6.2.6 BUILDING DOWNWASH EFFECTS

All significant building structures within Cargill's existing plant area were determined by a site plot plan. The plot plan of the Bartow facility was presented in Figure 2-2. All building structures were processed in the EPA Building Input Profile (BPIP, Version 95086) program to determine direction-specific building heights and projected widths for each 10-degree azimuth direction for each source that was included in the modeling analysis.

## 6.3 MODEL RESULTS

### 6.3.1 SIGNIFICANT IMPACT MODELING ANALYSIS

A summary of the predicted maximum $PM_{10}$ concentrations for the proposed modification only for the screening analysis is presented in Table 6-6. The modeling demonstrates that the maximum 24-hour concentration of 11.1 $\mu g/m^3$ is above the significance level of 5 $\mu g/m^3$, 24-hour average. The maximum annual $PM_{10}$ impact of 1.03 $\mu g/m^3$ is above the significance

level of 1.0 $\mu g/m^3$, annual average. As the proposed project's maximum impacts are above the significant impact levels, further PSD Class II increment and AAQS analysis are required for $PM_{10}$. The distance to which $PM_{10}$ is significant was determined to be 3.3 km, based on 24-hour impacts.

### 6.3.2 AAQS ANALYSIS

A summary of the maximum $PM_{10}$ concentrations predicted for all sources for the screening analysis is presented in Table 6-7. Based on the screening analysis results, modeling refinements were performed. The results of the refined modeling analysis are presented in Table 6-8. The maximum predicted annual and 24-hour $PM_{10}$ concentrations are 31.1 $\mu g/m^3$ and 119.8 $\mu g/m^3$ (high, second high), respectively, which includes an ambient non-modeled background concentration of 18 $\mu g/m^3$. The maximum high, second high $PM_{10}$ concentrations are less than the AAQS of 50 and 150 $\mu g/m^3$, respectively.

### 6.3.3 $PM_{10}$ PSD CLASS II ANALYSIS

The results of the screening analysis for PSD Class II increment consumption are presented in Table 6-9. Based on the screening analysis results, modeling refinements were performed. The results of the refined modeling analysis are presented in Table 6-10. The refined modeling results indicate that the maximum predicted PSD Class II 24-hour increment of 98.9 $\mu g/m^3$ is predicted to exceed the allowable $PM_{10}$ PSD Class II increment of 30 $\mu g/m^3$.

An analysis was performed to determine if the proposed project results in a significant impact during any of the modeled 24-hour PSD Class II exceedances. The impact of the proposed project alone was determined for each receptor and day on which a predicted exceedance occurred. The results of the analysis are summarized in Table 6-11. The results indicate that the proposed project's maximum 24-hour impact during any exceedance event is 4.48 $\mu g/m^3$. Based on these results refinements were performed. The refined model results indicate that the proposed project's maximum 24-hour impact to any exceedance event is 4.73 $\mu g/m^3$, which is less than the significant impact level of 5 $\mu g/m^3$. The results of the analysis are summarized in Table 6-12. Therefore, the proposed project does not cause or significantly contribute to the modeled PSD Class II exceedances.

### 6.3.4 PSD CLASS I MODELING ANALYSIS

Maximum $PM_{10}$ concentrations predicted for the proposed project alone at the Chassahowitzka NWA PSD Class I area are compared with the NPS recommended PSD Class I significance levels in Table 6-13. As the proposed project's maximum impacts are below the Class I significant impact levels, a full PSD Class I increment analysis is not required. However, PM10 impacts are required for the AQRV analysis for the Class I area, presented in Section 7.0.

### 6.3.5 FLUORIDE IMPACTS

**PSD Class II Modeling Analysis**

Maximum fluoride concentrations due to the proposed project at the site vicinity, PSD Class II area, are presented in Table 6-14 for the 8-hour, 24-hour, and annual averaging times. There are no AAQS or PSD increments for fluorides. However, fluoride impacts are required for the additional impact analysis and AQRV analysis for the Class II area, presented in Section 7.0.

**PSD Class I Modeling Analysis**

Maximum fluoride concentrations due to the proposed project at the Chassahowitzka Class I area are presented in Table 6-15 for the 8-hour, 24-hour, and annual averaging times. There are no AAQS or PSD increments for fluorides. However, fluoride impacts are required for the additional impact analysis and AQRV analysis for the Class I area, presented in Section 7.0.

# 7.0 ADDITIONAL IMPACT ANALYSIS

## 7.1 INTRODUCTION

Cargill is proposing to modify its existing facility in Bartow, Florida. The facility is subject to the PSD new source review requirements for $PM_{10}$ and fluoride. The additional impact analysis and the Class I area analysis addresses these pollutants.

The analysis addresses the potential impacts on vegetation, soils, and wildlife of the surrounding area and the nearest Class I area due to Cargill's proposed modification. The nearest Class I area is the Chassahowitzka National Wilderness Area (NWA), located approximately 118 kilometers (km) northwest of the Cargill Bartow plant. In addition, potential impacts upon visibility resulting from the proposed modification are assessed.

The analysis will demonstrate that the increase in impacts due to the proposed increase in emissions is extremely low. Regardless of the existing conditions in the vicinity of the site or in the Class I areas, the proposed project will not cause any significant adverse effects due to the predicted low impacts upon these areas.

## 7.2 SOIL, VEGETATION, AND AQRV ANALYSIS METHODOLOGY

In the foregoing analysis, the maximum air quality impacts predicted to occur in the vicinity of the Cargill plant and in the Class I area due to the increase in emissions are used. These impacts were presented in Section 6.0. The analysis involved predicting worst-case maximum short- and long-term concentrations of pollutants in the vicinity of the plant and in the Class I areas and comparing the maximum predicted concentrations to lowest observed effect levels for AQRVs or analogous organisms. In conducting the assessment, several assumptions were made as to how pollutants interact with the different matrices, i.e., vegetation, soils, wildlife, and aquatic environment.

A screening approach was used to evaluate potential effects which compared the maximum predicted ambient concentrations of air pollutants of concern with effect threshold limits for both vegetation and wildlife as reported in the scientific literature. A literature search was conducted which specifically addressed the effects of air contaminants on plant species

reported to occur in the vicinity of the plant and the Class I area. It was recognized that effects threshold information is not available for all species found in the Chassahowitzka NWA, although studies have been performed on a few of the common species and on other similar species which can be used as models.

## 7.3 IMPACTS TO SOILS, VEGETATION, AND VISIBILITY IN THE VICINITY OF THE CARGILL PLANT

### 7.3.1 IMPACTS TO SOILS

Soils in the vicinity of the Cargill site consist primarily mapped as arents-hydraquents-neihurst (Ford et al., 1990). Many of the soils in the region and a large portion of the site have been disturbed and altered by industrial activities, including phosphate mining and facility development.

**Particulate Matter ($PM_{10}$)**

These soils will not be affected by the additional $PM_{10}$ concentrations resulting from the proposed modification, because the underlying substrate is neutral to alkaline and would neutralize any acidifying effects of deposition.

The poorly drained sands in the area are already strongly acidic. Normal liming practices currently used on soils in the vicinity of Cargill by agricultural interests will effectively mitigate the small effects of any increased deposition resulting from the increased $PM_{10}$ emissions from the proposed project.

**Fluoride**

Only very small quantities of particulate deposition may occur; therefore, no measurable soil accumulation of fluorides will occur from the proposed fluoride emissions. As a result, the impact of the proposed emissions upon soils will not be significant.

### 7.3.2 IMPACTS TO VEGETATION

**Vegetation Analysis**

In general, the effects of air pollutants on vegetation occur primarily from $SO_2$, $NO_2$, $O_3$, and PM. Effects from minor air contaminants such as fluoride, chlorine, hydrogen chloride,

ethylene, ammonia, hydrogen sulfide, CO, and pesticides have also been reported in the literature. The effects of air pollutants are dependent both on the concentration of the contaminant and the duration of the exposure. The term "injury," as opposed to damage, is commonly used to describe all plant responses to air contaminants and will be used in the context of this analysis. Air contaminants are thought to interact primarily with plant foliage, which is considered to be the major pathway of exposure. For purposes of this analysis, it was assumed that 100 percent of each air contaminant of concern is accessible to the plants.

Injury to vegetation from exposure to various levels or air contaminants can be termed acute, physiological, or chronic. Acute injury occurs as a result of a short-term exposure to a high contaminant concentration and is typically manifested by visible injury symptoms ranging from chlorosis (discoloration) to necrosis (dead areas). Physiological or latent injury occurs as the result of a long-term exposure to contaminant concentrations below that which results in acute injury symptoms. Chronic injury results from repeated exposure to low concentrations over extended periods of time, often without any visible symptoms, but with some effect on the overall growth and productivity of the plant. In this assessment, 100 percent of the particular air pollutant in the ambient air was assumed to interact with the vegetation. This is a conservative approach.

The response of vegetation and wildlife to atmospheric pollutants is influenced by the concentration of the pollutant, duration of exposure, and frequency of exposures. The pattern of pollutant exposure expected from the facility is that of a few episodes of relatively high ground-level concentration which occur during certain meteorological conditions interspersed with long periods of extremely low ground-level concentrations. If there are any effects of stack emissions on plants and animals they will be from the short-term, higher doses. A dose is the product of the concentration of the pollutant and duration of the exposure.

Vegetation in the Vicinity of Cargill

Cut-over pine flatwoods and mixed forest comprise the natural vegetation in the vicinity of the Cargill site. Winter vegetables and pasture grasses are also cultivated in the area.

Particulate Matter

The maximum predicted concentrations of PM (in the form of $PM_{10}$) due to operation of all sources, including the proposed modification, are 120 $\mu g/m^3$ for the 24-hour average (high second high) and 31 $\mu g/m^3$ for the annual average (see Table 6-8). By comparing predicted concentrations with the few injury threshold values reported in the literature (Darley and Middleton, 1966; Krause and Kaiser, 1977), no potential effects on vegetation are predicted, because these concentrations are below the values reported to adversely affect plants.

Fluoride

Fluoride is an inhibitor of plant metabolism. As fluoride accumulates in plants, it causes an inhibition of plant metabolism and chlorosis (a yellowing of the leaf). With further increases in accumulation of fluoride, the cells die and necrosis is observed. Leaf tips and margins accumulate the highest concentrations of fluoride and are the sites of initial visible injury. Gaseous fluoride is taken up primarily through the stomata of transpiring plants. There is negligible contribution to leaf fluoride content by uptake by roots (Applied Sciences Associates, Inc., 1978).

The sensitivity of plants varies widely. Gladiolus are considered the most sensitive. Visible symptoms are reported to occur when gladiolus have been exposed to concentrations >0.5 microgram per cubic meter ($\mu g/m^3$) for 5 to 10 days. More tolerant fruit tree species and conifers first showed symptoms at around 1 $\mu g/m^3$ at 10-day exposures (Treshow and Anderson, 1989). Plant sensitivities can range from 16 $\mu g/m^3$ of fluoride in sensitive plants to 500 $\mu g/m^3$ of fluoride in tolerant plants for 3-hour exposures. The lowest observed effect levels for sensitive plants are reported to be as follows (Applied Sciences Associates, Inc., 1978):

<50 $\mu g/m^3$ for 1-hour exposures

<16 $\mu g/m^3$ for 3-hour exposures

<1.6 $\mu g/m^3$ for 24-hour exposures

The ingestion of excessive amounts of fluoride can lead to an animal disease called fluorosis. Fluorosis is a skeletal and dental disease resulting in softening of bone and dental tissue that can lead to injury and other health problems. In general, forage plants with over 30 ppm of fluoride which are regularly ingested by animals such as cattle and deer can result in mild fluorosis. A number of states (but not Florida) have fluoride standards. These range from 25 to 40 parts per million (ppm) of fluoride as a maximum annual average (Newman, 1984).

Data suggest that a fluoride accumulation factor might be calculated under fumigation conditions with an uncertainty factor of less than 2. One study indicated that hydrogen fluoride concentrations of 0.3 $\mu g/m^3$ would lead to an accumulation of up to 20 ppm of fluoride in conifer foliage after 2 years of exposure (Treshow and Anderson, 1989).

The predicted maximum 8-hour, 24-hour, and annual fluoride concentrations in the vicinity of the Cargill plant due to the expanded No. 3 Fertilizer Plant are 0.918, 0.592, and 0.054 $\mu g/m^3$, respectively (refer to Table 6-14). Based on these predicted impacts, no significant effects are predicted. Some chlorosis in sensitive plants might occur at the 24-hour exposures. These maximum values are predicted to occur southeast of the plant at the plant boundary. No significant adverse effects to vegetation are predicted because these are singular events and the effects are reversible and no significant vegetative resources occur in this area. The accumulation of fluoride to levels that could present a risk to herbivores is also unlikely given the predicted low annual levels.

### 7.3.3 IMPACTS UPON VISIBILITY

No new emission sources will be created by the proposed No. 3 Fertilizer Plant expansion. Current sources are and will be controlled by scrubbers and, therefore, the visible plume characteristics from this source will not change. Cargill has a number of similar type sources already in operation at Bartow. All these sources are in compliance with opacity regulations and should remain in compliance after the modification. As a result, no adverse impacts upon visibility in the vicinity of the plant are expected.

### 7.3.4 IMPACTS DUE TO ASSOCIATED POPULATION GROWTH

There will be a small, temporary increase in the number of workers during the construction period. There will be no significant increase in permanent employment at Cargill as a result of the proposed project. Therefore, there will be no anticipated permanent impacts on air quality caused by associated population growth.

## 7.4 CLASS I AREA IMPACT ANALYSIS

### 7.4.1 IDENTIFICATION OF AQRVS AND METHODOLOGY

An AQRV analysis was conducted to assess the potential risk to AQRVs of the Chassahowitzka NWA due to the proposed modification of from the Cargill Bartow facility. The U.S. Department of the Interior in 1978 administratively defined AQRVs to be:

> All those values possessed by an area except those that are not affected by changes in air quality and include all those assets of an area whose vitality, significance, or integrity is dependent in some way upon the air environment. These values include visibility and those scenic, cultural, biological, and recreational resources of an area that are affected by air quality.
>
> Important attributes of an area are those values or assets that make an area significant as a national monument, preserve, or primitive area. They are the assets that are to be preserved if the area is to achieve the purposes for which it was set aside (Federal Register 1978).

Except for visibility, AQRVs have not been specifically defined by the U.S. Fish and Wildlife Service (USFWS) for Chassahowitzka NWA. However, odor, soil, flora, fauna, cultural resources, geological features, water, and climate generally have been identified by land managers as AQRVs. Since specific AQRVs have not been identified for the Chassahowitzka NWA, this AQRV analysis evaluates the effects of air quality on general vegetation types and wildlife found in the Chassahowitzka NWA.

Vegetation type AQRVs and their representative species types have been defined as:

Marshlands - black needlerush, saw grass, salt grass, and salt marsh cordgrass

Marsh Islands - cabbage palm and eastern red cedar

Estuarine Habitat - black needlerush, salt marsh cordgrass, and wax myrtle

Hardwood Swamp - red maple, red bay, sweet bay, and cabbage palm

Upland Forests - live oak, scrub oak, longleaf pine, slash pine, wax myrtle, and saw palmetto

Mangrove Swamp - red, white, and black mangrove

Wildlife AQRVs have been identified as endangered species, waterfowl, marsh and waterbirds, shorebirds, reptiles, and mammals.

A screening approach was used that compared the maximum predicted ambient concentration of air pollutants of concern in the Chassahowitzka NWA with effect threshold limits for both vegetation and wildlife as reported in the scientific literature. A literature search was conducted that specifically addressed the effects of air contaminants on plant species reported to occur in the NWA. While the literature search focused on such species as cabbage palm, eastern red cedar, lichens, and species of the hardwood swamplands and mangrove forest, no specific citations that addressed these species were found. It is recognized that effect threshold information is not available for all species found in the Chassahowitzka NWA, although studies have been performed on a few of the common species and on other similar species that can be used as indicators of effects.

### 7.4.2 VEGETATION

**General**

As stated earlier, the effects of contaminants are dependent both on the concentration of the contaminant and the duration of the exposure. The term "injury," as opposed to damage, is commonly used to describe all plant responses to air contaminants and will be used in the context of this analysis. Air contaminants are thought to interact primarily with plant foliage, which is considered to be the major pathway of exposure. For purposes of this analysis, it is assumed that 100 percent of each air contaminant of concern is accessible to the plants.

Injury to vegetation from exposure to various levels of air contaminants can be termed acute, physiological, and chronic. Acute injury occurs as a result of a short-term exposure to a high contaminant concentration and is typically manifested by visible injury symptoms

ranging from chlorosis (discoloration) to necrosis (dead areas). Physiological or latent injury occurs as the result of a long-term exposure to contaminant concentrations below that which results in acute injury symptoms. Chronic injury results from repeated exposure to low concentrations over extended periods of time, often without any visible symptoms but with some effect on the overall growth and productivity of the plant.

**Particulate Matter Exposure**

Although information pertaining to the effects of particulate matter on plants is scarce, some concentrations are available (Mandoli and Dubey, 1988). Ten species of native Indian plants were exposed to levels of particulate matter that ranged from 210 to 366 $\mu g/m^3$ for an 8-hour averaging period. Damage in the form of a higher leaf area/dry weight ratio was observed at varying degrees for most plants tested. Concentrations of particulate matter lower than 163 $\mu g/m^3$ did not appear to be injurious to the tested plants.

By comparison of these published toxicity values for particulate matter exposure (i.e., concentrations for an 8-hour averaging time), the possibility of plant damage in the Chassahowitzka NWA can be determined. The maximum predicted incremental 8-hour, 24-hour, and annual $PM_{10}$ concentrations, due to the modified Cargill No. 3 Fertilizer plant, are 0.244, 0.075, 0.004 $\mu g/m^3$ (see Table 16-13). These values are well below the NPS recommended Class 1 Significance Levels and the proposed EPA Class 1 Significance Levels. Therefore, no effects to vegetative AQRVs are expected from the No. 3 Fertilizer Plant expansion.

**Fluoride Exposure**

Fluoride is an inhibitor of plant metabolism. As fluoride accumulates in plants, it causes an inhibition of plant metabolism and chlorosis (a yellowing of the leaf). With further increases in accumulation of fluoride, the cells die and necrosis is observed. Leaf tips and margins accumulate the highest concentrations of fluoride and are the sites of initial visible injury. Gaseous fluoride is taken up primarily through the stomata of transpiring plants. There is negligible contribution to leaf fluoride content by uptake by roots (Applied Sciences Associates, Inc., 1978).

The sensitivity of plants varies widely. Gladiolus are considered the most sensitive. Visible symptoms are reported to occur when gladiolus have been exposed to concentrations >0.5 microgram per cubic meter ($\mu g/m^3$) for 5 to 10 days. More tolerant fruit tree species and conifers first showed symptoms at around 1 $\mu g/m^3$ at 10-day exposures (Treshow and Anderson, 1989). Plant sensitivities can range from 16 $\mu g/m^3$ of fluoride in sensitive plants to 500 $\mu g/m^3$ of fluoride in tolerant plants for 3-hour exposures. The lowest observed effect levels for sensitive plants are reported to be as follows (Applied Sciences Associates, Inc., 1978):

<50 $\mu g/m^3$ for 1-hour exposures
<16 $\mu g/m^3$ for 3-hour exposures
<1.6 $\mu g/m^3$ for 24-hour exposures

The ingestion of excessive amounts of fluoride can lead to an animal disease called fluorosis. Fluorosis is a skeletal and dental disease resulting in softening of bone and dental tissue that can lead to injury and other health problems. In general, forage plants with over 30 ppm of fluoride which are regularly ingested by animals such as cattle and deer can result in mild fluorosis. A number of states (but not Florida) have fluoride standards. These range from 25 to 40 parts per million (ppm) of fluoride as a maximum annual average (Newman, 1984).

Data suggest that a fluoride accumulation factor might be calculated under fumigation conditions with an uncertainty factor of less than 2. One study indicated that hydrogen fluoride concentrations of 0.3 $\mu g/m^3$ would lead to an accumulation of up to 20 ppm of fluoride in conifer foliage after 2 years of exposure (Treshow and Anderson, 1989).

The predicted maximum 8-hour, 24-hour, and annual fluoride concentrations in the Chassahowitzka NWA due to the modified No. 3 Fertilizer Plant are 0.027, 0.0080, and 0.00044 $\mu g/m^3$, respectively (refer to Table 6-15). These predicted values are well below the lowest observed effect levels for sensitive vegetation. No significant adverse effects are predicted to occur to the vegetative AQRVs of Chassahowitzka NWA. Since the predicted

annual concentration is very low, no measurable accumulation of fluoride will occur in vegetation that would be the prime forage of wildlife. Therefore, no significant adverse effects to wildlife AQRVs will occur.

### 7.4.3 WILDLIFE

**Particulate Matter Exposure**

A wide range of physiological and ecological effects to fauna has been reported for particulate pollutants (Newman, 1980; Newman and Schreiber, 1988). The most severe of these effects have been observed at concentrations above the $PM_{10}$ secondary ambient air quality standards (150 $\mu g/m^3$, 24-hour average, and 50 $\mu g/m^3$, annual average). Physiological and behavioral effects have also been observed in experimental animals at or below these standards. However, no observable effects to fauna are expected at concentrations up to the values reported in Table 6-13. As shown in Table 6-13, the concentrations of $PM_{10}$ in the Class I area due to the proposed project are well below those that would cause respiratory stress in wildlife. The proposed project's contribution to cumulative impacts is negligible.

**Fluoride Exposure**

As discussed in Section 7.4.2, no measured accumulation of fluoride in vegetation is expected to occur in the Chassahowitzka NWA due to the proposed project. As a result, no significant adverse effects to wildlife AQRVs will occur.

### 7.4.4 SOILS

**Particulate Matter Exposure**

The majority of the soil in the Class I area is classified as Weekiwachee-Durbin muck. This is an euic, hyperthermic type sufihemist that is characterized by high levels of sulfur and organic matter. This soil is flooded daily with the advent of high tide and the pH ranges between 6.1 and 7.8. The upper level of this soil may contain as much as 4 percent sulfur (USDA, 1991).

Any particulate deposition from the proposed project would be neutral or alkaline in nature. Although ground deposition was not calculated, it is evident that the effect of any dust

deposited would be inconsequential in light of the existing soil pH. The regular flooding of these soils by the Gulf of Mexico regulates the pH and any change in acidity in the soil would be buffered by this activity.

### 7.4.5 IMPACTS UPON VISIBILITY

General

A regional haze analysis was conducted to determine if the proposed Cargill modification would cause a perceptible degradation in visibility at the Chassahowitzka NWR. The CNWR is located approximately 118 kilometers (km) northwest of the Cargill-Bartow plant. Visibility is an Air Quality Related Value at the CNWR. The visibility of an area is generally characterized by either its visual range, $V_r$ (i.e., the greatest distance that a dark object can be seen) or its extinction coefficient, $b_{ext}$ (i.e., the attenuation of light over a distance due to particle scattering and/or gaseous absorption). The visual range and extinction coefficient are related to one another by the following equation[a]:

$$b_{ext} = 3.912 / V_r \ (km^{-1}) \quad (1)$$

The National Park Service (NPS) in coordination with the Fish and Wildlife Service (FWS) uses the Deciview index (NPS, 1992), $d_v$, to describe an area's change in extinction coefficient. The deciview is defined as:

$$d_v = 10 \ln (b_{ext}/0.01) \quad (2)$$

where ln represents the natural logarithm of the quantity in parentheses. A change in an area's deciview (NPS, 1995, 1997), $\Delta d_v$, of 0.5 corresponds to an approximate 5 percent changed in extinction, which is considered as a noticeable change in regional haze. The deciview change is defined by:

$$\Delta d_v = 10 \ln (1 + b_{exts}/b_{extb}) \quad (3)$$

where $b_{exts}$ and $b_{extb}$ represent the extinction coefficients due to the source (i.e., the proposed expansion) and for the CNWR background visual range, respectively. Based on recent communications with the NPS, the background visual range for the CNWR is 65 km based on air monitoring data (USFWS, 1995).

**Calculation of Source Extinction**

The source extinction due to the proposed plant expansion is calculated according to interim recommendations that are provided in the Interagency Workgroup on Air Quality Modeling (IWAQM) Phase I Report, Appendix B. The report states that the primary sources of regional visibility degradation are mostly fine particles with diameters $\leq 2.5\ \mu m$, ammonium bi-sulfate $[(NH_4)_2SO_4]$ and ammonium nitrate $(NH_4NO_3)$. The procedures for determining the ambient concentration levels of these compounds due to the proposed project are:

1. Obtain the maximum hourly sulfur dioxide ($SO_2$), nitrogen oxides ($NO_x$), and fine particulate matter ($PM_{10}$), impacts due to the proposed expansion from the MESOPUFF II air quality dispersion model with chemical transformation processes. Based on verbal communications with Bud Rolofson of the NPS, the NPS had changed its policy of using the hourly maximum impacts to using the highest 24-hour impacts for these pollutants. The maximum 24-hour impacts are based on the highest predicted concentrations from the MESOPUFF II model for 1986. It should be noted that meteorological data for 1986 were used in the MESOPUFF II model since the necessary data were not readily available for 1987 to 1991, the years for which pollutant concentrations were predicted for the project. The maximum 24-hour impacts at the CNWR due to the proposed project only are 0.0486, 0.0062, and 0.0151 $\mu g/m^3$ for $SO_2$, $NO_x$, and $PM_{10}$, respectively.
2. Calculate maximum concentrations of ammonium sulfate and ammonium nitrate from multiplicative factors 1.375 and 1.29, respectively, from IWAQM, Appendix B.
3. Obtain hourly values of relative humidity (RH). The maximum predicted 24-hour impacts from the MESOPUFF II model occurred on 2/6/86. The Tampa National Weather Service hourly surface observations for this day were obtained.
4. Calculate the extinction coefficients of ammonium sulfate, ammonium nitrate, and primary fine particulate. The extinction coefficients for each compound are defined by:

$$b_{exts} = 0.003 \text{ (comp) } f(RH)$$

where (comp) represents the ambient concentration of the compound in question, and f(RH) is the relative humidity factor. Based on hourly relative humidity factors for 2/6/86, an average daily RH factor of 5.9 was computed. For $H_2SO_4$ mist (as fine particulate matter), an RH factor of unity was used per IWAQM recommendations. The total source extinction coefficient value is equal to the sum of the calculated extinction coefficients for each compound.

A summary of the calculations is provided in Table 7-1. The total source extinction coefficient due to the proposed project was determined to be 0.00034. From equation (3), above, the total deciview change due to the proposed project is 0.0554.

Based on this analysis, the proposed project will result in less that a 5 percent decrease in visibility to the clearest days observed at the CNWR. Therefore, no adverse impacts upon regional haze is expected to occur due to the proposed Cargill project.

The existing No. 3 Fertilizer plant must currently meet an opacity limitation of 10 percent. This opacity limit is expected to be met after the plant is expanded to greater capacity. This opacity level produces essentially no visible emissions and, therefore, no increase in the visible plume from the No. 3 Fertilizer Plant's expansion is expected.

Table 2-1. Current and Proposed Permit Limitations for No. 3 Fertilizer Plant, Cargill Fertilizer, Inc.

| | Particulate Matter | Fluorides |
|---|---|---|
| CURRENT LIMITATIONS | | |
| Production Rate (MAP/DAP produced) | 2,640 TPD | 2,640 TPD |
| Operating Hours | 8,760 hr/yr | 8,760 hr/yr |
| Emission Limit | 30.0 lb/hr | 0.06 lb/ton P2O5; 1.8 lb/hr |
| Hourly Emissions | 30.0 lb/hr | 1.8 lb/hr |
| Annual Emissions | 131.4 TPY | 7.88 TPY |
| PROPOSED LIMITATIONS | | |
| Production Rate (MAP/DAP produced) | 3,000 TPD | 3,000 TPD |
| Process Rate (P2O5 Input) | 1,470 TPD P2O5 | 1,470 TPD P2O5 |
| Operating Hours | 8,760 hr/yr | 8,760 hr/yr |
| Emission Limit | 0.19 lb/ton P2O5 | 0.041 lb/ton P2O5 |
| Hourly Emissions | 11.6 lb/hr | 2.5 lb/hr |
| Annual Emissions | 50.98 TPY | 10.95 TPY |

Notes:

lb/hr = pounds per hour
lb/ton = pounds per ton
TPD = tons per day
TPY = tons per year

Table 2-2. Stack Parameters for Existing and Expanded No. 3 Fertilizer Plant

| | MAP/DAP Production Rate[a] (TPD) | Stack Height (ft) | Stack Diameter (ft) | Gas Flow Rate (acfm) | Gas Velocity (fps) | Gas Temperature (EF) |
|---|---|---|---|---|---|---|
| Existing Conditions | 2,640 | 125 | 7.5 | 108,000 | 39.5 | 160 |
| Future Conditions | 3,000 | 141 | 7.5 | 210,000 | 79.2 | 160 |

Note: acfm = actual cubic feet per minute.
°F = degrees Fahrenheit.
fps = feet per second.
ft = feet.
TPD = tons per hour.

Table 2-3. Summary of Maximum Emissions from Fuel Combustion, No. 3 Fertilizer Plant

| Parameter | No. 6 Fuel Oil | Natural Gas |
|---|---|---|
| OPERATING DATA | | |
| Heat Input Rate (MMBtu/hr) | 40.0 | 40.0 |
| Fuel Oil Use (gal/hr) (a) | 272.1 | NA |
| Fuel Oil Use (gal/yr) | 338,000 | NA |
| Maximum Sulfur Content (Wt %) | 1.5 | NA |
| Natural Gas Use (scf/hr) | NA | 40,000 |
| Natural Gas Use (MMscf/yr) | NA | 350.40 |

| Pollutant | Emission Factor (b) | No. 6 Fuel Oil (lb/hr) | Natural Gas (lb/hr) | Maximum Annual Emissions (TPY) fuel oil and Natural Gas | Maximum Annual Emissions (TPY) 100% Natural Gas |
|---|---|---|---|---|---|
| EMISSIONS DATA | | | | | |
| SO2: Fuel Oil | 157*S lb/Mgal (c) | 64.08 | 0.024 | 39.89 | 0.11 |
| Natural Gas | 0.6 lb/MMft³ | | | | |
| NOx: Fuel Oil | 55 lb/Mgal | 14.97 | 5.60 | 30.34 | 24.53 |
| Natural Gas | 140 lb/MMft³ | | | | |
| CO: Fuel Oil | 5 lb/Mgal | 1.36 | 1.40 | 6.11 | 6.13 |
| Natural Gas | 35 lb/MMft³ | | | | |
| NMVOC: Fuel Oil | 0.28 lb/Mgal | 0.076 | 0.11 | 0.47 | 0.49 |
| Natural Gas | 2.8 lb/MMft³ (d) | | | | |

Note: NA = not applicable.
These emissions are discharged through the No. 3 Fertilizer stack.
PM emission data is presented in Table 2-1.

(a) Based on 147,000 Btu/gal for 1.5% S oil; 1000 BTU/SCF for Natural Gas.
(b) Emission factors based on AP-42.
(c) "S" denotes the weight % sulfur in fuel oil; max sulfur content = 2.4%
(d) Methane comprises 52% of total VOC

Table 2-3b. Summary of Actual Emissions from Fuel Combustion, No. 3 Fertilizer Plant 1996-1997

| Parameter | Natural Gas |
|---|---|
| **OPERATING DATA** | |
| Heat Input Rate (MMBtu/hr) | 34.1 |
| Natural Gas Use (scf/hr) | 34,100 |
| Natural Gas Use (MMscf/yr) (a) | 96.05 |

| Pollutant | Emission Factor (b) | Natural Gas (lb/hr) | Maximum Annual Emissions (TPY) 100% Natural Gas |
|---|---|---|---|
| **EMISSIONS DATA** | | | |
| SO2: | | | |
| Natural Gas | 0.6 lb/MMft³ | 0.020 | 0.03 |
| NOx: | | | |
| Natural Gas | 140 lb/MMft³ | 4.77 | 6.72 |
| CO: | | | |
| Natural Gas | 35 lb/MMft³ | 1.19 | 1.68 |
| NMVOC: | | | |
| Natural Gas | 2.8 lb/MMft³ (c) | 0.10 | 0.13 |

These emissions are discharged through the No. 3 Fertilizer stack.

(a) Average Natural gas usage from 1997-1997 (1996 = 98.1 MMscf, 94.0 MMscf)

(b) Emission factors based on AP-42.

(c) Methane comprises 52% of total VOC

Table 3-1. PSD Significant Emission Rates and *De Minimis* Monitoring Concentrations

| Pollutant | Regulated Under | Significant Emission Rate (TPY) | *De Minimis* Monitoring Concentration ($\mu g/m^3$) |
|---|---|---|---|
| Sulfur Dioxide | NAAQS, NSPS | 40 | 13, 24-hour |
| Particulate Matter (TSP) | NSPS | 25 | NA |
| Particulate Matter (PM10) | NAAQS | 15 | 10, 24-hour |
| Nitrogen Oxides | NAAQS, NSPS | 40 | 14, annual |
| Carbon Monoxide | NAAQS, NSPS | 100 | 575, 8-hour |
| Volatile Organic Compounds (Ozone) | NAAQS, NSPS | 40 | 100 TPY[a] |
| Lead | NAAQS | 0.6 | 0.1, 3-month |
| Sulfuric Acid Mist | NSPS | 7 | NM |
| Total Fluorides | NSPS | 3 | 0.25, 24-hour |
| Mercury | NESHAP | 0.1 | 0.25, 24-hour |
| Total Reduced Sulfur | NSPS | 10 | 10, 1-hour |
| Reduced Sulfur Compounds | NSPS | 10 | 10, 1-hour |
| Hydrogen Sulfide | NSPS | 10 | 0.2, 1-hour |
| MWC Organics (as dioxification) | NSPS | $3.5 \times 10^{-6}$ | NA |
| MWC Metals (as PM) | NSPS | 15 | NA |
| MWC Acid Gases (as $SO_2$+HCl) | NSPS | 40 | NA |
| MSW Landfill Emission (as NMVOC) | NSPS | 50 | NA |

Note: Ambient monitoring requirements for any pollutant may be exempted if the impact of the increase in emissions is below *de minimis* monitoring concentrations.

MWC = Municipal waste combustor
MSW = Municipal solid waste
NA = Not Applicable
NAAQS = National Ambient Air Quality Standards
NESHAP = National Emission Standards for Hazardous Air Pollutants
NM = No ambient measurement method
NSPS = New Source Performance Standards
PM10 = particulate matter with aerodynamic diameter less than or equal to 10 micrometers
PSD = prevention of significant deterioration
TPY = tons per year
TSP = total suspended particulate matter
$\mu g/m^3$ = micrograms per cubic meter

[a] No *de minimis* concentration; an increase in VOC emissions of 100 TPY or more will require monitoring analysis for ozone.

Source: F.A.C., Rule 62-212.400, Tables 212.400-2 and 212.400-3.

Table 4-1. Summary of PM10 Monitoring Data Collected Near Cargill's Bartow Facility

| Year | County | Station ID | Monitor Location | Number of Observations | Maximum Concentrations Reported ($\mu g/m^3$) | |
|---|---|---|---|---|---|---|
| | | | | | 24-Hour | Annual |
| PM10 Data | | | | | | |
| 1997 | Polk | 3680-010-F02 | Anderson & Pine-Crest Road, Nichols | 63 | 41 | 18[a] |

[a] Geometric mean concentration.

Table 4-2. Summary of PM/PM10 Monitoring Data Collected Near the Chassahowitzka NWA

| Year | County | Station ID | Monitor Location | Number of Observations | Maximum Concentrations Reported ($\mu g/m^3$) | |
|---|---|---|---|---|---|---|
| | | | | | 24-Hour | Annual |
| PM Data | | | | | | |
| 1996 | Citrus | 0580-003-J09 | Crystal River; Twin Rivers Marina | 58 | 75 | 30[a] |
| PM10 Data | | | | | | |
| 1996 | Citrus | National Park Service | Within Chassahawitzka NWA | 104 | 49 | 19.5 |

[a] Geometric mean concentration.

Table 5-1. Summary of No. 3 Fertilizer Plant Stack Test Data, Cargill Fertilizer Bartow

| Date | DAP Production Rate (TPH) | $P_2O_5$ Input (TPH) | PM Emissions | | Fluoride Emissions | |
|---|---|---|---|---|---|---|
| | | | lb/hr | lb/ton $P_2O_5$ | lb/hr | lb/ton $P_2O_5$ |
| 05/07/98 | 98.3 | 47.9 | 3.7 | 0.078 | 1.27 | 0.0265 |
| 09/11/97 | 104.0 | 50.2 | 4.6 | 0.092 | 1.71 | 0.0341 |
| 06/09/97 | 71.5 | 32.9 | 0.415 | 0.013 | 0.43 | 0.0131 |
| 11/27/96 | 72.0 | 34.8 | 1.6 | 0.047 | 1.74 | 0.0500 |
| 12/07/95 | 70.3 | 33.0 | 1.5 | 0.044 | 0.67 | 0.0203 |
| 05/25/95 | 78.0 | 35.9 | 0.248 | 0.007 | 0.09 | 0.0025 |
| 12/01/94 | 65.4 | 30.1 | 1.8 | 0.028 | 1.60 | 0.0532 |
| 04/06/94 | 95.0 | 46.2 | 4.0 | 0.042 | 0.61 | 0.0132 |

Source: stack test data

Notes:

TPH = tons per hour

lb/ton = pounds per ton

lb/hr = pounds per hour

$P_2O_5$ = phosphorous pentoxide

Table 3-2. PSD Source Applicability Analysis, Cargill No.3 Fertilizer Plant Expansion

| Emission Scenario | Emission Rate (TPY) | | | | | | |
|---|---|---|---|---|---|---|---|
| | PM | PM10 | F | SO2 | VOC | NOx | CO |
| Current Actual Emissions | | | | | | | |
| No. 3 Fertilizer plant | 7.9 (a) | 7.9 (a) | 5.47 (a) | 0.030 (b) | 0.13 (b) | 6.72 (b) | 1.68 (b) |
| No. 4 Phosphoric Acid Plant (c) | -- | -- | 1.47 | -- | -- | -- | -- |
| No. 3 Filter (d) | -- | -- | 1.26 | -- | -- | -- | -- |
| No. 5 Phosphoric Acid Plant (e) | -- | -- | 1.21 | -- | -- | -- | -- |
| No. 3 Shipping Plant (f) | 4.38 | 4.38 | -- | -- | -- | -- | -- |
| Total | 12.28 | 12.28 | 9.41 | 0.03 | 0.13 | 6.72 | 1.68 |
| Proposed Maximum Emissions | | | | | | | |
| No. 3 Fertilizer plant @ 3,000 TPD | 51.98 (g) | 51.98 (g) | 10.95 (g) | 39.64 (h) | 0.42 (h) | 24.52 (h) | 5.23 (h) |
| Phosphoric Acid Plant (i) | -- | -- | 10.01 | -- | -- | -- | -- |
| No. 3 Shipping Plant (j) | 12.0 | 12.0 | -- | -- | -- | -- | -- |
| Total | 63.98 | 63.98 | 20.96 | 39.64 | 0.42 | 24.52 | 5.23 |
| Total Net Increase | 51.7 | 51.7 | 11.6 | 39.6 | 0.3 | 17.8 | 3.6 |
| PSD Significant Emission Rate | 25 | 15 | 3 | 40 | 40 | 40 | 100 |

Notes:
F = fluoride.
MMscf = million standard cubic feet.

(a) Based on average hours of operation during 1996 and 1997 of 7,981.5 hours and 7,454.2 hours, respectively, and annual stack test results (two tests in 1997) as follows:
1996: PM-1.63 lb/hr; F-1.74 lb/hr
1997: PM-2.52 lb/hr; F-1.07 lb/hr
Emission Rate (TPY) = [(1996 lb/hr * 1996 hrs.) + (1997 lb/hr *1997 hrs.)]/ (2 * 2000 lb/ton)
(b) Based on average No. 3 Fertilizer plant natural gas usage during 1996 and 1997 of 98.1 MMscf and 94.0 MMscf, respectively, and AP-42. Refer to Table 2-3b.
(c) Based on average hours of operation during 1996 and 1997 of 8015 hours and 8277 hours, respectively, and annual stack test results (two tests in 1997) as follows:
1996: F-0.319 lb/hr
1997: F-0.402 lb/hr
Emission Rate (TPY) = [(1996 lb/hr * 1996 hrs.) + (1997 lb/hr *1997 hrs.)]/ (2 * 2000 lb/ton)
(d) Based on average hours of operation for the No. 4 Phosphoric Acid Plant during 1996 and 1997 of 8015 hours and 8277 hours, respectively, and annual stack test results (two tests in 1997) as follows:
1996: F-0.113 lb/hr
1997: F-0.196 lb/hr
Emission Rate (TPY) = [(1996 lb/hr * 1996 hrs.) + (1997 lb/hr *1997 hrs.)]/ (2 * 2000 lb/ton)
(e) Based on average hours of operation during 1996 and 1997 of 8057 hours and 8313 hours, respectively, and annual stack test results (two tests in 1997) as follows:
1996: F-0.337 lb/hr
1997: F-0.254 lb/hr
Emission Rate (TPY) = [(1996 lb/hr * 1996 hrs.) + (1997 lb/hr *1997 hrs.)]/ (2 * 2000 lb/ton)
(f) Based on average hours of operation during 1996 and 1997 of 2825.15 hours and 2942.5 hours, respectively, and annual stack test results as follows:
1996: PM-3.1 lb/hr
1997: PM- compliance test waived due to the use of dust suppressant oil system
Emission Rate (TPY) = (1996 lb/hr * 1996 hrs.) / (2000 lb/ton)
(g) Proposed emission rates are 11.6 lb/hr for PM; and 2.5 lb/hr for fluoride.
(h) Based on a maximum heat input of 40 MMBtu/hr for 8760 hr/yr. Refer to Table 2-3.
(i) Based on combined F emission limit for Nos. 4 and 5 Phosphoric Acid Plants of 2.29 lb/hr, from permit no. AC53-262532.
(j) Based on PM/PM10 emission limit of 12 lb/hr, from permit no. AO53-185367.

Table 5-2. Summary of BACT Determinations for PM Emissions from Ammonium Phosphate Plants

| Company | Permit # | Permit Issue Date | Throughput | Emission Limit | Control Equipment | Control Efficiency |
|---|---|---|---|---|---|---|
| CARGILL FERTILIZER, INC. --Tampa | AC29-196763; PSD-FL-178 | 11/26/91 | 73.5 *TPH P2O5 | 0.19 lb/ton P2O5 | VENTURI SCRUBBER | 99% |
| IMC-AGRICO --New Wales | 1050059-020-AC; PSD-FL-241 | 01/21/98 | 80 TPH P2O5 | 0.29 lb/ton P2O5; 23.08 lb/hr total | PACKED BED SCRUBBER | -- |
| CARGILL FERTILIZER --Bartow | AC53-246403; PSD-FL-211 | 11/28/94 | 120 TPH P2O5 | 0.19 lb/ton P2O5 | PACKED BED SCRUBBER | -- |
| IMC-AGRICO COMPANY --Nichols | AC53-230355; AC53-232681; PSD-FL-204 | 04/18/94 | 100 TPH DAP | 0.41 lb/ton 100% P2O5 | VENTURI ACID SCRUBBER | -- |

Source: EPA's RACT/BACT/LAER Clearinghouse, 1998.

Notes:
DAP = Diammonium Phosphate
MAP = Monoammonium Phosphate

* Original permit for 67.2 TPH; was later amended.

Table 5-3. Summary of BACT Determinations for Fluoride Emissions from Ammonium Phosphate Plants

| Company | Permit # | Permit Issue Date | Throughput | Emission Limit | Control Equipment | Control Efficiency |
|---|---|---|---|---|---|---|
| C F INDUSTRIES, INC. | AC 29-210979 | 05/25/92 | 100 TPH MAP/DAP | 0.06 lb/ton P2O5 | TWO STAGE SCRUBBER, ADDITION OF COOLER | 99.8% |
| FARMLAND HYDRO, L.P. | AC53-210886; PSD-FL-186 | 07/28/92 | 100 TPH DAP | 0.06 lb/ton P2O5 | MULTI STAGE SCRUBBER, ADDITION OF COOLER | 99.9% |
| FARMLAND HYDRO, L.P. | AC53-210886; PSD-FL-186 | 07/28/92 | 120 TPH MAP | 0.06 lb/ton P2O5 | MULTI STAGE SCRUBBER, ADDITION OF COOLER | 99.9% |
| IMC-AGRICO- New Wales | 1050059-020-AC; PSD-FL-241 | 01/21/98 | 80 TPH P2O5 | 0.0417 lb/ton P2O5 | PACKED BED SCRUBBER | 99.0% |
| CARGILL FERTILIZER | AC29-196763; PSD-FL-178 | 11/26/91 | 73.5 * TPH P2O5 | 0.06 lb/ton P2O5 | VENTURI SCRUBBER | -- |
| IMC-AGRICO- Nichols | AC53-230355; AC53-232681; PSD-FL-204 | 04/18/94 | 100 TPH DAP | 0.0417 lb/ton P2O5 | VENTURI ACID SCRUBBER | -- |

Source: EPA's RACT/BACT/LAER Clearinghouse, 1998.

Notes:
DAP = Diammonium Phosphate
MAP = Monoammonium Phosphate

* Original permit for 67.2 TPH; was later amended.

Table 6-1. Major Features of the ISCST3 Model

| ISCST3 Model Features |
|---|
| • Polar or Cartesian coordinate systems for receptor locations |
| • Rural or one of three urban options which affect wind speed profile exponent, dispersion rates, and mixing height calculations |
| • Plume rise due to momentum and buoyancy as a function of downwind distance for stack emissions (Briggs, 1969, 1971, 1972, and 1975; Bowers, et al., 1979). |
| • Procedures suggested by Huber and Snyder (1976); Huber (1977); and Schulman and Scire (1980) for evaluating building wake effects |
| • Procedures suggested by Briggs (1974) for evaluating stack-tip downwash |
| • Separation of multiple emission sources |
| • Consideration of the effects of gravitational settling and dry deposition on ambient particulate concentrations |
| • Capability of simulating point, line, volume, area, and open pit sources |
| • Capability to calculate dry and wet deposition, including both gaseous and particulate precipitation scavenging for wet deposition |
| • Variation of wind speed with height (wind speed-profile exponent law) |
| • Concentration estimates for 1-hour to annual average times |
| • Terrain-adjustment procedures for elevated terrain including a terrain truncation algorithm for ISCST3; a built-in algorithm for predicting concentrations in complex terrain |
| • Consideration of time-dependent exponential decay of pollutants |
| • The method of Pasquill (1976) to account for buoyancy-induced dispersion |
| • A regulatory default option to set various model options and parameters to EPA recommended values (see text for regulatory options used) |
| • Procedure for calm-wind processing including setting wind speeds less than 1 m/s to 1 m/s. |

Note: ISCST3 = Industrial Source Complex Short-Term.

Source: EPA, 1995.

Table 6-2. Summary of Stack Parameters for the Proposed No. 3 Fertilizer Plant Modification, Cargill Bartow

| Source | ISCST ID | PM10 Emissions (g/s) | F Emissions (g/s) | Stack Height (ft) | Stack Height (m) | Stack Diameter (ft) | Stack Diameter (m) | Flowrate (acfm) | Stack Velocity (f/s | Stack Velocity (m/s) | Stack Temp. (deg F) | Stack Temp. (deg K) | Stack Location X (m) | Stack Location Y (m) |
|---|---|---|---|---|---|---|---|---|---|---|---|---|---|---|
| Pre-Modification Sources (a) | | | | | | | | | | | | | | |
| No. 3 Fertilizer Plant | DAP3B | 0.26 | 0.18 | 125 | 38.1 | 7.5 | 2.29 | 108,000 | 40.60 | 12.38 | 160 | 344.3 | 308 | 147 |
| No. 4 Phosphoric Acid Plant | PHOS4B | -- | 0.45 | 144 | 43.9 | 3.9 | 1.19 | 22,500 | 31.07 | 9.47 | 114 | 318.7 | 406 | 396 |
| No. 5 Phosphoric Acid Plant | PHOS5B | -- | 0.37 | 99 | 30.2 | 5.0 | 1.52 | 34,200 | 29.03 | 8.85 | 109 | 315.9 | 425 | 505 |
| No. 3 Filter | FILTER3B | -- | 0.19 | 120 | 36.6 | 5.0 | 1.52 | 37,700 | 32.00 | 9.75 | 110 | 316.5 | 420 | 445 |
| No. 3 Shipping Plant | SHIP3B | 0.39 | -- | 80 | 24.4 | 2.3 | 0.70 | 9,300 | 37.31 | 11.37 | 72 | 295.0 | 252 | -14 |
| Post-Modification Sources (b) | | | | | | | | | | | | | | |
| No. 3 Fertilizer Plant | DAP3 | 1.46 | 0.32 | 141 | 43.0 | 7.5 | 2.29 | 210,000 | 78.95 | 24.06 | 160 | 344.0 | 308 | 147 |
| No. 4 Phosphoric Acid Plant | PHOS4 | -- | 0.13 | 144 | 43.9 | 3.9 | 1.19 | 25,000 | 34.52 | 10.52 | 100 | 310.9 | 406 | 396 |
| No. 5 Phosphoric Acid Plant | PHOS5 | -- | 0.11 | 99 | 30.2 | 5.0 | 1.52 | 35,000 | 29.71 | 9.06 | 100 | 310.9 | 425 | 505 |
| No. 3 Filter | FILTER3 | -- | 0.054 | 120 | 36.6 | 5.0 | 1.52 | 53,000 | 44.99 | 13.71 | 100 | 310.9 | 420 | 445 |
| No. 3 Shipping Plant | SHIP3 | 1.51 | -- | 80 | 24.4 | 2.3 | 0.70 | 9,300 | 37.31 | 11.37 | 72 | 295.0 | 252 | -14 |
| Unmodified Sources | | | | | | | | | | | | | | |
| No. 4 Fertilizer Plant (b) | DAP4 | 2.87 | 0.69 | 140 | 42.7 | 11.0 | 3.35 | 240,000 | 42.09 | 12.85 | 132 | 329.0 | 0 | 0 |
| No. 4 Shipping Plant (b) | SHIP4 | 1.33 | -- | 128 | 39.0 | 4.9 | 1.49 | 43,000 | 38.00 | 11.64 | 90 | 305.0 | -49 | -67 |
| Molten Sulfur Pit A (c) | MSO2PA | 0.058 | -- | 40 | 12.2 | 1.0 | 0.31 | 2,700 | 14.32 | 4.37 | 200 | 367.0 | 118 | 318 |
| Molten Sulfur Pit B (c) | MSO2PB | 0.058 | -- | 40 | 12.2 | 1.0 | 0.31 | 2,700 | 14.32 | 4.37 | 200 | 367.0 | 160 | 288 |

(a) Based on stack test data and actual PM10 emissions, 1996 and 1997.
(b) Based on permitted emission limits.
(c) Based on emission rate of 0.02 gr/cu. ft. and a flow rate of 2,700 acfm.

Legend
ft = feet
m = meters
acfm = actual cubic feet per minute
f/s = feet per second
m,/s = meters per second
deg F = degrees Fahrenheit
deg K = degrees Kelvin
lb/hr = pounds per hour
g/s = grams per second

Table 6-3. Emissions of SO2 and NOx for the Proposed No. 3 Fertilizer Plant Expansion
Cargill Bartow

| Source | SO2 Emissions(a) | | NOx Emissions (a) | |
|---|---|---|---|---|
| | (lb/hr) | (g/s) | (lb/hr) | (g/s) |
| Post-Modification | | | | |
| No. 3 Fertilizer Plant | 64.08 | 8.07 | 14.97 | 1.89 |

(a) see Table 2-3.

Legend
lb/hr = pounds per hour
g/s = grams per second

Table 6-4. Cargill Property Boundary Receptors Used in the Modeling Analysis

| Direction (deg) | Distance (m) | Direction (deg) | Distance (m) |
|---|---|---|---|
| 10 | 3760. | 190 | 1158. |
| 20 | 3941. | 200 | 1212. |
| 30 | 3344. | 210 | 1313. |
| 40 | 3780. | 220 | 1481. |
| 50 | 4789. | 230 | 1761. |
| 60 | 3789. | 240 | 2256. |
| 70 | 3065. | 250 | 2092. |
| 80 | 2925. | 260 | 1996. |
| 90 | 2758. | 270 | 1966. |
| 100 | 2629. | 280 | 1996. |
| 110 | 2100. | 290 | 2092. |
| 120 | 1460. | 300 | 2270. |
| 130 | 1265. | 310 | 2566. |
| 140 | 1179. | 320 | 2706. |
| 150 | 1137. | 330 | 2393. |
| 160 | 1131. | 340 | 2627. |
| 170 | 1160. | 350 | 2507. |
| 180 | 1142. | 360 | 3703. |

Note: Distances are relative to the DAP No. 4 stack location.
deg = degree.
m = meter.

Table 6-5. Chassahowitzka Wilderness Area Receptors Used in the Modeling Analysis

| UTM Coordinates | |
|---|---|
| East (km) | North (km) |
| 340.3 | 3,165.7 |
| 340.3 | 3,167.7 |
| 340.3 | 3,169.8 |
| 340.7 | 3,171.9 |
| 342.0 | 3,174.0 |
| 343.0 | 3,176.2 |
| 343.7 | 3,178.3 |
| 342.4 | 3,180.6 |
| 341.1 | 3,183.4 |
| 339.0 | 3,183.4 |
| 336.5 | 3,183.4 |
| 334.0 | 3,183.4 |
| 331.5 | 3,183.4 |

Table 6-6. Maximum Predicted PM10 Impacts Due to the Proposed Project Only - Screening Analysis

| Averaging Time | Concentration (Fg/m$^3$) | Receptor Location[a] | | Period Ending (YYMMDDHH) |
|---|---|---|---|---|
| | | Direction (degrees) | Distance (m) | |
| Site Vicinity | | | | |
| Annual | 0.714 | 230 | 1761 | 87123124 |
| | 1.007 | 210 | 1313 | 88123124 |
| | 1.031 | 200 | 1212 | 89123124 |
| | 0.777 | 250 | 2092 | 90123124 |
| | 0.836 | 230 | 1761 | 91123124 |
| HIGH 24-Hour | 6.572 | 130 | 1265 | 87011124 |
| | 9.087 | 200 | 1212 | 88070524 |
| | 11.113 | 160 | 1131 | 89030724 |
| | 7.862 | 170 | 1160 | 90111924 |
| | 6.805 | 210 | 1313 | 91110524 |
| HSH 24-Hour | 5.954 | 130 | 1265 | 87050824 |
| | 7.282 | 190 | 1158 | 88103024 |
| | 8.259 | 170 | 1160 | 89102924 |
| | 6.207 | 170 | 1160 | 90112024 |
| | 5.550 | 120 | 1460 | 91020824 |

Note: Impacts reported are highest predicted.
YY=Year, MM=Month, DD=Day, HH=Hour, HSH=Highest, Second-Highest.

[a] Relative to No. 4 DAP stack location. Impacts reported are highest predicted.

Table 6-7. Maximum Predicted PM10 Concentrations for All Sources - AAQS Screening Analysis

| Averaging Time | Modeled Sources' Concentration (□g/m³) | Receptor Location[a] Direction (degrees) | Distance (m) | Period Ending (YYMMDDHH) |
|---|---|---|---|---|
| Annual | 10.549 | 180 | 3300 | 87123124 |
| | 10.442 | 110 | 3000 | 88123124 |
| | 12.726 | 90 | 3300 | 89123124 |
| | 11.026 | 100 | 3000 | 90123124 |
| | 11.982 | 200 | 3300 | 91123124 |
| HIGH 24-Hour | 99.444 | 160 | 3000 | 87022724 |
| | 92.203 | 150 | 3300 | 88073124 |
| | 108.084 | 180 | 3200 | 89072124 |
| | 106.087 | 180 | 330 | 90082224 |
| | 143.823 | 180 | 330 | 91071524 |
| HSH 24-Hour | 66.640 | 180 | 3200 | 87082024 |
| | 72.058 | 130 | 3200 | 88122824 |
| | 77.361 | 130 | 3000 | 89042424 |
| | 70.995 | 190 | 3000 | 90101824 |
| | 88.845 | 180 | 3000 | 91062024 |

Note: YY=Year, MM=Month, DD=Day, HH=Hour.

[a] Relative to No. 4 DAP stack location.

Table 6-8. Maximum Predicted PM10 Concentrations for All Sources Compared With AAQS-Refined Analysis

| Averaging Time | Concentration ($\mu g/m^3$) | | | Receptor Location[a] | | Period Ending (YYMMDDHH) | Florida AAQS ($\mu g/m^3$) |
|---|---|---|---|---|---|---|---|
| | Total | Modeled Sources | Background | Direction (degrees) | Distance (m) | | |
| Annual | 31 | 23 | 18 | 92 | 3300 | 89123124 | 50 |
| HSH 24-Hour | 120 | 91 | 18 | 173 | 330 | 91062024 | 150 |

Note: YY = year.
MM = month.
DD = day.
HH = hour.
HSH = highest, second-highest.

[a] Relative to No. 4 DAP stack location.

Source: Golder Associates Inc., 1998.

Table 6-9. Maximum Predicted PM10 Increment Consumption - PSD Class II Screening Analysis

| Averaging Time | Concentration ($\mu g/m^3$) | Receptor Location[a] Direction (degrees) | Distance (m) | Period Ending (YYMMDDHH) |
|---|---|---|---|---|
| Annual | 9.318 | 180. | 3300. | 87123124 |
| | 9.804 | 110. | 3000. | 88123124 |
| | 12.097 | 90. | 3300. | 89123124 |
| | 10.406 | 100. | 3000. | 90123124 |
| | 10.791 | 200. | 3300. | 91123124 |
| HIGH 24-Hour | 96.432 | 160. | 3000. | 87022724 |
| | 92.164 | 150. | 3300. | 88073124 |
| | 107.565 | 180. | 3200. | 89072124 |
| | 105.311 | 90. | 3300. | 90021924 |
| | 143.331 | 180. | 3300. | 91071524 |
| HSH 24-Hour | 62.430 | 180. | 3200. | 87090224 |
| | 71.845 | 130. | 3200. | 88122824 |
| | 74.947 | 90. | 3300. | 89060924 |
| | 70.513 | 190. | 3000. | 90101824 |
| | 87.266 | 180. | 3000. | 91062024 |

Note: YY=Year, MM=Month, DD=Day, HH=Hour.

[a] Relative to $H_2SO_4$ Plant No. 9 stack location.

Table 6-10. Maximum Predicted PM10 PSD Increment Consumption Compared with PSD Class II Increments -- Refined Analysis

| | Receptor Location[a] | | | | |
|---|---|---|---|---|---|
| Averaging Time | Concentration ($\mu g/m^3$) | Direction (degrees) | Distance (m) | Period Ending (YYMMDDHH) | Allowable PSD Increment ($\mu g/m^3$) |
| Annual | 12.47 | 92 | 3300 | 89123124 | 17 |
| HSH 24-Hour | 98.93 | 173 | 3300 | 91062024 | 30 |

Note: YY=Year, MM=Month, DD=Day, HH=Hour.

[a] Relative to No. 4 DAP stack location.

Table 6-11. Maximum Predicted 24-Hour PM Concentrations for the Proposed Project Only at the Area of Modeled PSD Class II Exceedances

| Averaging | Concentration | Receptor Location[a] X (m) | Receptor Location[a] Y (m) | Period Ending (YYMMDDHH) | EPA Significance Levels ($\mu g/m^3$) |
|---|---|---|---|---|---|
| HIGH 24-Hour | 4.48 | -1966 | 0 | 97041324 | 5 |
| | 3.23 | -1.1 | -1140 | 88062124 | 5 |
| | 3.52 | 855 | 2349 | 89033024 | 5 |
| | 4.01 | -1954 | -1128 | 90091124 | 5 |
| | 3.09 | 1264 | -730 | 91081624 | 5 |

Note: YY=Year, MM=Month, DD=Day, HH=Hour

[a] Relative to No. 4 DAP stack location.

Table 6-12. Maximum Predicted 24-Hour PM Concentrations for the Proposed Project Only at the Area of Modeled PSD Class II Exceedances–Refined Analysis

| Averaging | Concentration | Receptor Location[a] X (m) | Receptor Location[a] Y (m) | Period Ending (YYMMDDHH) | EPA Significance Levels ($\mu g/m^3$) |
|---|---|---|---|---|---|
| HIGH 24-Hour | 4.73 | -1966 | -137 | 87041324 | 5 |

Note: YY=Year, MM=Month, DD=Day, HH=Hour

[a] Relative to No. 4 DAP stack locations.

Table 6-13. Maximum Predicted PM10 Concentrations for the Proposed Modification Only at the Chassahowitzka Wilderness Area

| Averaging | Concentration | Receptor Location[a] UTM-E | UTM-N | Period Ending (YYMMDDHH) | EPA Significance Levels (□g/m³) |
|---|---|---|---|---|---|
| Annual | 0.003 | 340300. | 3165700. | 87123124 | 0.1 |
| | 0.003 | 340300. | 3165700. | 88123124 | |
| | 0.004 | 343700. | 3178300. | 89123124 | |
| | 0.002 | 342000. | 3174000. | 90123124 | |
| | 0.002 | 340300. | 3165700. | 91123124 | |
| HIGH 24-Hour | 0.058 | 341100. | 3183400. | 87080524 | 0.33 |
| | 0.061 | 340300. | 3167700. | 88073124 | |
| | 0.071 | 340300. | 3169800. | 89100624 | |
| | 0.075 | 342000. | 3174000. | 90071424 | |
| | 0.056 | 340300. | 3169800. | 91072724 | |
| HIGH 8-Hour | 0.173 | 341100. | 3183400. | 87080508 | NA |
| | 0.176 | 340300. | 3165700. | 88101208 | |
| | 0.244 | 343700. | 3178300. | 89072024 | |
| | 0.202 | 342000. | 3174000. | 90071416 | |
| | 0.142 | 340300. | 3165700. | 91083024 | |

Note: YY=Year, MM=Month, DD=Day, HH=Hour, HSH = Highest, Second-Highest, NA = Not Applicable.

[a] All receptor coordinates are reported in Universal Transverse Mercator (UTM) Coordinates.

Table 6-14. Maximum Predicted Fluoride Impacts Due to the Future No. 3 Fertilizer Plant —Site Vicinity

| Averaging Time | Concentration ($\mu g/m^3$) | Receptor Location[a] | | Period Ending (YYMMDDHH) |
|---|---|---|---|---|
| | | Direction (degrees) | Distance (m) | |
| Site Vicinity | | | | |
| Annual | 0.096 | 250 | 2092 | 87123124 |
| | 0.128 | 210 | 1313 | 88123124 |
| | 0.139 | 190 | 1158 | 89123124 |
| | 0.105 | 260 | 1996 | 90123124 |
| | 0.106 | 250 | 2092 | 91123124 |
| HIGH 24-Hour | 1.064 | 210 | 1313 | 87101124 |
| | 1.187 | 200 | 1212 | 88070524 |
| | 1.443 | 150 | 1137 | 89030724 |
| | 0.870 | 170 | 1160 | 90111924 |
| | 1.012 | 210 | 1313 | 91012624 |
| HIGH 8-Hour | 1.479 | 200 | 1313 | 87110524 |
| | 2.039 | 190 | 1158 | 88120224 |
| | 2.074 | 160 | 1131 | 89103008 |
| | 1.633 | 180 | 1142 | 90013116 |
| | 1.724 | 180 | 1142 | 91110324 |

Note: Impacts reported are highest predicted.
YY=Year, MM=Month, DD=Day, HH=Hour, HSH=Highest, Second-Highest.

[a] Relative to No. 4 DAP stack location. Impacts reported are highest predicted.

Table 6-15. Maximum Predicted Fluoride Concentrations for the Future No. 3 Fertilizer Plant — Chassahowitzka Wilderness Area

| Averaging | Concentration | Receptor Location[a] UTM-E | UTM-N | Period Ending (YYMMDDHH) |
|---|---|---|---|---|
| Annual | 0.00060 | 340300. | 3165700. | 87123124 |
| | 0.00077 | 340300. | 3165700. | 88123124 |
| | 0.00086 | 340300. | 3165700. | 89123124 |
| | 0.00044 | 340300. | 3165700. | 90123124 |
| | 0.00055 | 340300. | 3165700. | 91123124 |
| HIGH 24-Hour | 0.01304 | 342400. | 3180600. | 87080524 |
| | 0.01371 | 340300. | 3167700. | 88073124 |
| | 0.01559 | 340300. | 3169800. | 89100624 |
| | 0.01267 | 340700. | 3171900. | 90070324 |
| | 0.01237 | 340300. | 3169800. | 91072724 |
| HIGH 8-Hour | 0.03911 | 342400. | 3180600. | 87080508 |
| | 0.03550 | 340300. | 3165700. | 88101208 |
| | 0.05342 | 343700. | 3178300. | 89072024 |
| | 0.03371 | 340700. | 3171900. | 90070324 |
| | 0.03104 | 340300. | 3165700. | 91083024 |

Note: YY=Year, MM=Month, DD=Day, HH=Hour, HSH = Highest, Second-Highest, NA = Not Applicable.

[a] All receptor coordinates are reported in Universal Transverse Mercator (UTM) Coordinates.

Table 7-1. Estimated Change in Deciview Due to the Cargill Bartow Project No. 3 Fertilizer Plant Expansion

| Pollutant | Value | Reference |
|---|---|---|
| Highest Predicted 24-Hour Concentrations ($\mu g/m^3$) | | |
| $SO_2$ | 0.0486 | (2) |
| $NO_X$ | 0.00619 | (2) |
| PM10 | 0.0151 | (1) |
| $SO_4$ | 0.0103 | (2) |
| $NO_3$ | 0.00169 | (2) |
| $(NH_4)_2\ SO_4$ | 0.1199 | (3) |
| $NH_4\ NO_3$ | 0.0040 | (4) |
| Average RH (percent) | 86 | (5) |
| RH factor, f(RH) | 5.9 | (6) |
| Extinction Coefficients ($km^{-1}$) | | |
| Background: (bextb) | 0.0602 | (7) |
| Source: (bexts) | | |
| $(NH_4)_2\ SO_4$ | 0.00025 | (8) |
| $NH_4\ NO_3$ | 0.00004 | (8) |
| $PM_{10}$ | 0.000045 | (9) |
| Total (bexts) | 0.000340 | |
| Deciview Change | | |
| total delta dv = | 0.0554 | (10) |

(1) Highest predicted PM10 concentration (as SO4) in Mesopuff II model without chemistry for 1 year meteorological record from Tampa for 1986
(2) Highest predicted concentration from SO2 and NOx emissions from Mesopuff model with chemistry for 1 year meteorological record from Tampa for 1986
(3) $(NH_4)_2\ SO_4 = SO_4$ times 1.375 from IWAQM Appendix B
(4) $NH_4\ NO_3 = NO_3$ times 1.29 from IWAQM Appendix B
(5) Based on meteorological data collected at the National Weather Service station in Tampa for February 6, 1986 (worst day).
(6) From IWAQM Figure B-1. Based on average of hourly computed RH factors
(7) bextb = 3.912 / 65 where background visual range is 65 km.
(8) values= 0.003 * compound concentration* f(RH) from IWAQM Appendix B
(9) PM10 = 0.003 * compound concentration. f(RH) set = 1 for fine PM
(10) Delta DV = 10 * ln (1 + bexts/bextb)

1996-5.5/CARGILL BASE revised

05-15-96

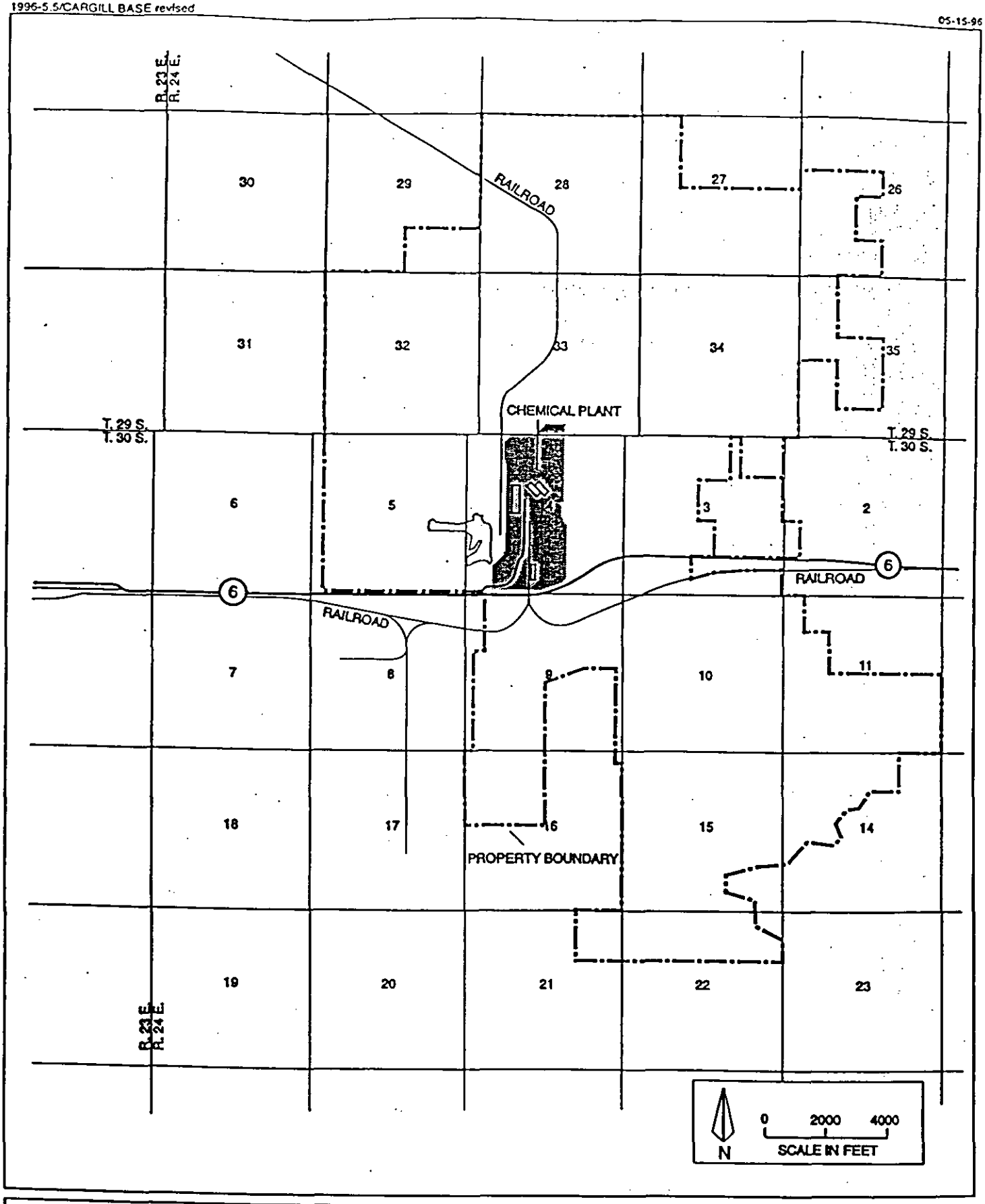


FIGURE 2-1

Area Map Showing Facility Location

Golder Associates

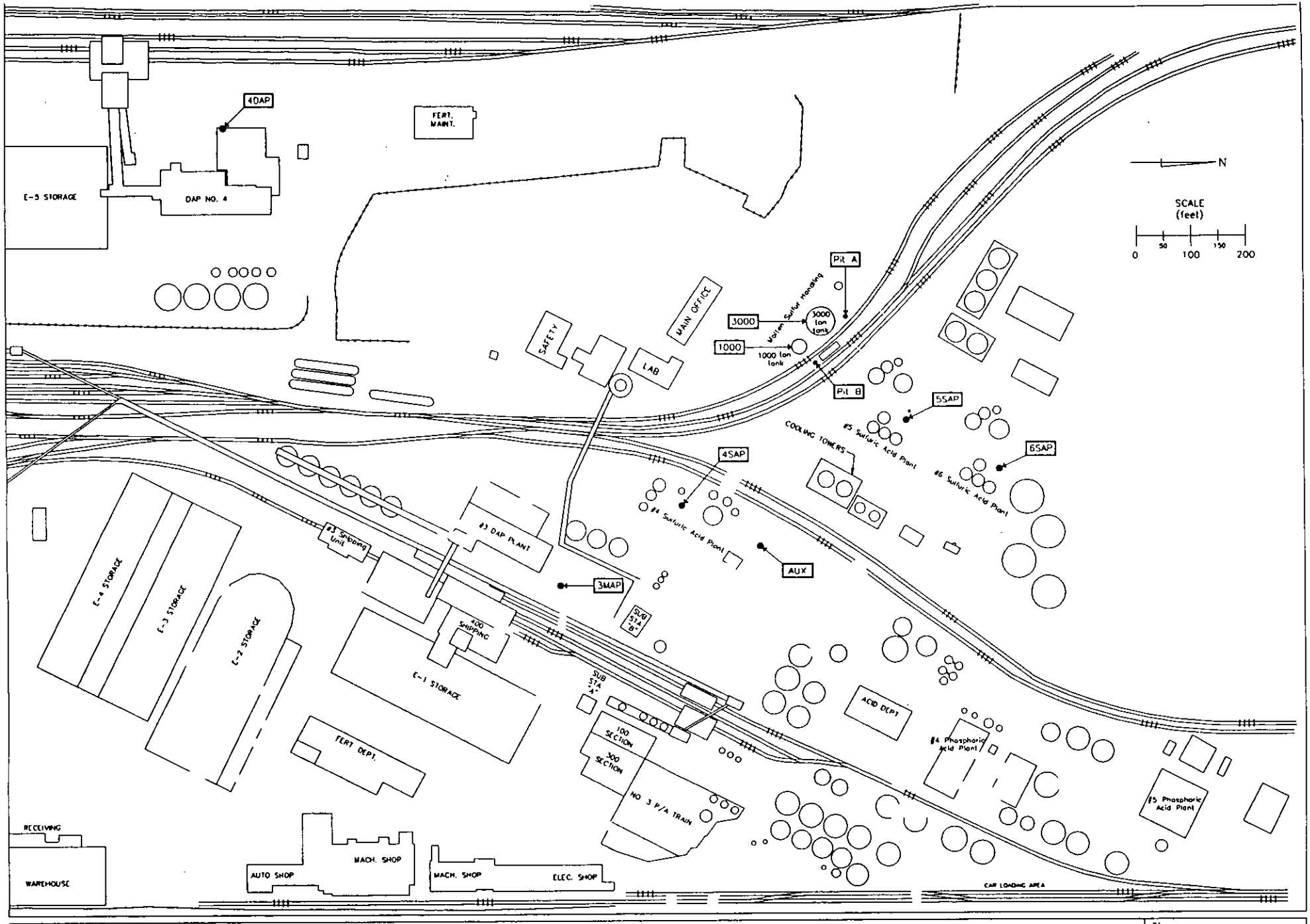


Figure 2-2 Site map of Cargill Fertilizer, Inc., Bartow, FL

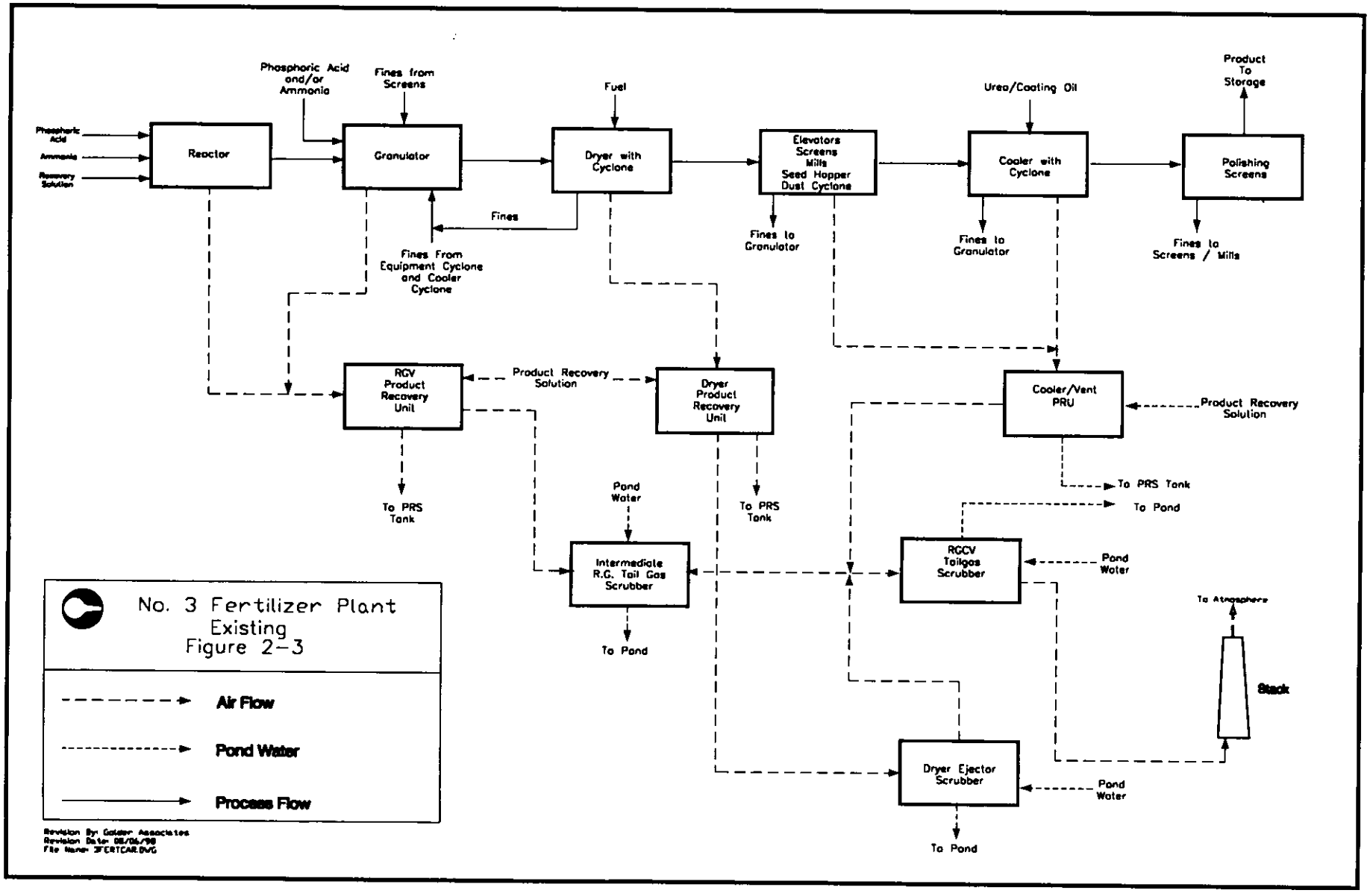
Phosphoric Acid
Ammonia
Recovery Solution
Reactor
Phosphoric Acid and/or Ammonia
Fines from Screens
Granulator
Fines
Fines From Equipment Cyclone and Cooler Cyclone
Fuel
Dryer with Cyclone
Elevators Screens Mills Seed Hopper Dust Cyclone
Fines to Granulator
Urea/Coating Oil
Cooler with Cyclone
Fines to Granulator
Product To Storage
Polishing Screens
Fines to Screens / Mills
RGV Product Recovery Unit
Product Recovery Solution
Dryer Product Recovery Unit
Cooler/Vent PRU
Product Recovery Solution
To PRS Tank
To PRS Tank
To PRS Tank
To Pond
Pond Water
Intermediate R.G. Tail Gas Scrubber
To Pond
RGCV Tailgas Scrubber
Pond Water
To Atmosphere
Stack
Dryer Ejector Scrubber
Pond Water
To Pond
No. 3 Fertilizer Plant
Existing
Figure 2-3
Air Flow
Pond Water
Process Flow
Revision By: Golder Associates
Revision Date: 08/06/98
File Name: 3FERTCAR.DWG

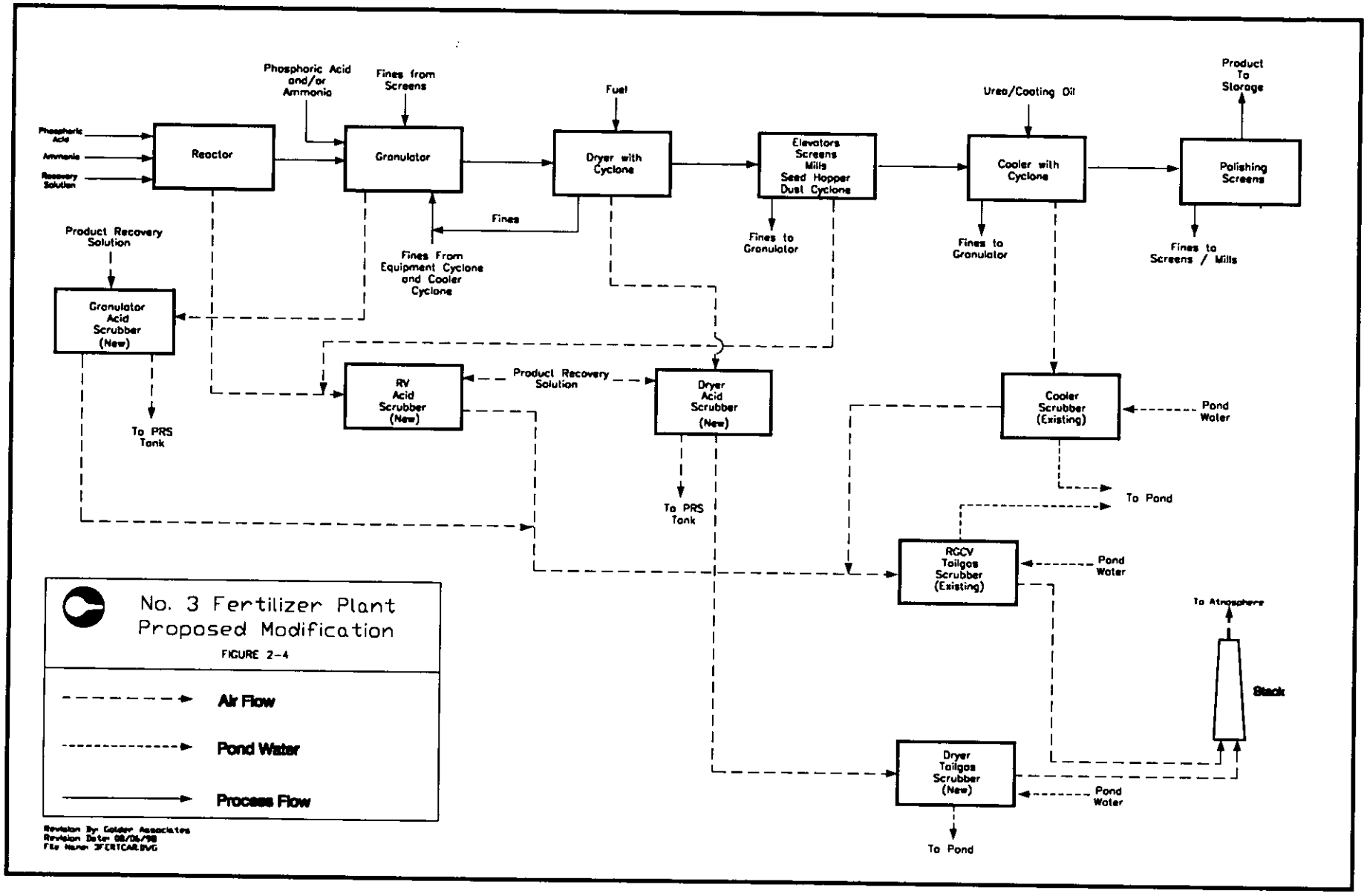
Phosphoric Acid
Ammonia
Recovery Solution
Reactor
Phosphoric Acid and/or Ammonia
Fines from Screens
Granulator
Fuel
Dryer with Cyclone
Elevators Screens Mills Seed Hopper Dust Cyclone
Urea/Coating Oil
Cooler with Cyclone
Product To Storage
Polishing Screens
Fines
Fines From Equipment Cyclone and Cooler Cyclone
Fines to Granulator
Fines to Granulator
Fines to Screens / Mills
Product Recovery Solution
Granulator Acid Scrubber (New)
To PRS Tank
RV Acid Scrubber (New)
Product Recovery Solution
Dryer Acid Scrubber (New)
To PRS Tank
Cooler Scrubber (Existing)
Pond Water
To Pond
RGCV Tailgas Scrubber (Existing)
Pond Water
To Atmosphere
Stack
Dryer Tailgas Scrubber (New)
Pond Water
To Pond
No. 3 Fertilizer Plant
Proposed Modification
FIGURE 2-4
Air Flow
Pond Water
Process Flow
Revision By: Golder Associates
Revision Date: 08/06/98
File Name: 3FERTCAR.DWG

# REFERENCES



Darley, E.F. and Middleton, J.T. 1966. Problems in Air Pollution in Plant Pathology. Ann. Rev. Phytopath., 4:103-118.

Golder Associates Inc. 1996. PSD Application for Animal Feed Ingredient Plant, Cargill Fertilizer, Inc., Riverview, Florida.

Krause, G.H.M. and Kaiser, H. 1977. Plant Response to Heavy Metals and Sulphur Dioxide. Environ. Pollut., 12:63-71.

Mandoli, B.L. and P.S. Dubey. 1988. The Industrial Emission and Plant Response at Pithampur (M.P.). Int. J. Ecol. Environ. Sci. 14:75-79.

National Park Service (NPS). July 10, 1995. Regional Haze Analysis Calculation Worksheet, Facsimile from B. Rolofson, NPS to S. Marks, KBN.

NPS. Personal Communication between B. Nolofson and Robert McCann, Golder Associates Inc.

Newman, J.R. 1984. Fluoride Standards Predicting Wildlife Effects. Fluoride 17: 41-47.

Newman, J.R., and R.K. Schreiber. 1988. Air Pollution and Wildlife Toxicology: An Overlooked Problem. Environmental Toxicology and Chemistry, 7-381-390.

Treshow, M. and F.K. Anderson. 1989. Plant Stress from Air Pollution. John Wiley and Sons, New York.

U.S. Department of Agriculture and Soil Conservation Service. 1991. Soil Survey of Hillsborough County, Florida.

U.S. Department of Agriculture, 1991. Surveys of Hernando and Citrus Counties, Florida. USDA Soil Conservation Service in cooperation with University of Florida, Institute of Food and Agricultural Sciences, Agricultural Experiment Stations, and Soil Science Department.

U.S. Environmental Protection Agency. 1995. User's Guide for the Industrial Source Complex (ISC3) Models. EPA-454/3-95-003a.

U.S. Environmental Protection Agency. 1988. EPA's User's Network for Applied Modeling of Air Pollution (UNAMAP), Version 6, Change 3, January 4, 1988. Research Triangle Park, North Carolina.

U.S. Environmental Protection Agency. 1987. Ambient Monitoring Guidelines for Prevention of Significant Deterioration (PSD).

REFERENCES
(Page 2 of 2)

U.S. Environmental Protection Agency. 1985. BACT/LAER Clearinghouse - A Compilation of Control Technology Determinations.

U.S. Environmental Protection Agency. 1980. Workbook for Estimating Visibility Impairment. Office of Air, Noise and Radiation, Office of Air Quality Planning and Standards.

U.S. Environmental Protection Agency. 1978. Diagnosing Vegetation Injury Caused by Air Pollution. Prepared by Applied Sciences Associates, Inc. EPA-450/3-78-005. Research Triangle Park, NC.

U.S. Fish and Wildlife Service (USFWS). 1995. Air Quality Branch, Technical Review of Cargill Fertilizer PSD Application June 26, 1995.

ATTACHMENT A

CRITERIA POLLUTANT EMISSION FACTORS

Table 1.3-1. CRITERIA POLLUTANT EMISSION FACTORS FOR UNCONTROLLED FUEL OIL COMBUSTION[a]

| Firing Configuration (SCC)[a] | $SO_2$[b] | | $SO_3$[c] | | $NO_x$[d] | | CO[e,f] | | Filterable PM[g] | |
|---|---|---|---|---|---|---|---|---|---|---|
| | Emission Factor ($lb/10^3$ gal) | EMISSION FACTOR RATING | Emission Factor ($lb/10^3$ gal) | EMISSION FACTOR RATING | Emission Factor ($lb/10^3$ gal) | EMISSION FACTOR RATING | Emission Factor ($lb/10^3$ gal) | EMISSION FACTOR RATING | Emission Factor ($lb/10^3$ gal) | EMISSION FACTOR RATING |
| Utility boilers | | | | | | | | | | |
| No. 6 oil fired, normal firing (1-01-004-01) | 157S | A | 5.7S | C | 67 | A | 5 | A | 9.19(S)+3.22 | A |
| No. 6 oil fired, tangential firing (1-01-004-04) | 157S | A | 5.7S | C | 42 | A | 5 | A | 9.19(S)+3.22 | A |
| No. 5 oil fired, normal firing (1-01-004-05) | 157S | A | 5.7S | C | 67 | A | 5 | A | 10 | B |
| No. 5 oil fired, tangential firing (1-01-004-06) | 157S | A | 5.7S | C | 42 | A | 5 | A | 10 | B |
| No. 4 oil fired, normal firing (1-01-005-04) | 150S | A | 5.7S | C | 67 | A | 5 | A | 7 | B |
| No. 4 oil fired, tangential firing (1-01-005-05) | 150S | A | 5.7S | C | 42 | A | 5 | A | 7 | B |
| No. 6 oil fired (1-02-004-01/02/03) | 157S | A | 2S | A | 55 | A | 5 | A | 9.19(S)+3.22 | A |
| No. 5 oil fired (1-02-004-04) | 157S | A | 2S | A | 55 | A | 5 | A | 10 | B |
| Distillate oil fired (1-02-005-01/02/03) | 142S | A | 2S | A | 20 | A | 5 | A | 2 | A |
| No. 4 oil fired (1-02-005-04) | 150S | A | 2S | A | 20 | A | 5 | A | 7 | B |
| Commercial/institutional | | | | | | | | | | |
| No. 6 oil fired (1-03-004-01/02/03) | 157S | A | 2S | A | 55 | A | 5 | A | 9.19(S)+3.22 | A |
| No. 5 oil fired (1-03-004-04) | 157S | A | 2S | A | 55 | A | 5 | A | 10 | B |
| Distillate oil fired (1-03-005-01/02/03) | 142S | A | 2S | A | 20 | A | 5 | A | 2 | A |
| No. 4 oil fired (1-03-005-04) | 150S | A | 2S | A | 20 | A | 5 | A | 7 | B |
| Residential furnace (A2104004/A2104011) | 142S | A | 2S | A | 18 | A | 5 | A | 0.4[h] | B |

Table 1.4-1. EMISSION FACTORS FOR SULFUR DIOXIDE ($SO_2$), NITROGEN OXIDES ($NO_x$), AND CARBON MONOXIDE (CO) FROM NATURAL GAS COMBUSTION[a]

| Combustor Type (Size, $10^6$ Btu/hr Heat Input) (SCC) | $SO_2$[b] | | $NO_x$[c] | | CO[d] | | $N_2O$[e] | |
|---|---|---|---|---|---|---|---|---|
| | Emission Factor (lb/$10^6$ $ft^3$) | EMISSION FACTOR RATING | Emission Factor (lb/$10^6$ $ft^3$) | EMISSION FACTOR RATING | Emission Factor (lb/$10^6$ $ft^3$) | EMISSION FACTOR RATING | Emission Factor (lb/$10^6$ $ft^3$) | EMISSION FACTOR RATING |
| Utility/large Industrial Boilers (>100) (1-01-006-01, 1-01-006-04) | | | | | | | | |
| Uncontrolled | 0.6 | A | 550[f] | A | 40 | A | 2.2 | C |
| Controlled - Low $NO_x$ burners | 0.6 | A | 79 | D | ND | NA | 0.64 | E |
| Controlled - Flue gas recirculation | 0.6 | A | 53 | D | ND | NA | NA | NA |
| Small Industrial Boilers (10 - 100) (1-02-006-02) | | | | | | | | |
| Uncontrolled | 0.6 | A | 140 | A | 35 | A | 2.2[g] | E |
| Controlled - Low $NO_x$ burners | 0.6 | A | 83 | D | 61 | D | 0.64[g] | E |
| Controlled - Flue gas recirculation | 0.6 | A | 30 | C | 34 | C | NA | NA |
| Commercial Boilers (0.3 - <10) (1-03-006-03) | | | | | | | | |
| Uncontrolled | 0.6 | A | 100 | B | 21 | C | 2.2[g] | E |
| Controlled - Low $NO_x$ burners | 0.6 | A | 17 | C | 15 | C | 0.64[g] | E |
| Controlled - Flue gas recirculation | 0.6 | A | 36 | D | ND | NA | NA | NA |
| Residential Furnaces (<0.3) (No SCC) | | | | | | | | |
| Uncontrolled | 0.6 | A | 94 | B | 40 | B | NA | NA |

[a] Units are lb of pollutant/$10^6$ cubic feet natural gas fired. To convert from lb/$10^6$ $ft^3$ to kg/$10^6$ $m^3$, multiply by 16.0. Based on an average natural gas fired higher heating value of 1000 Btu/scf. The emission factors in this table may be converted to other natural gas heating values by multiplying the given emission factor by the ratio of the specified heating value to this average heating value. SCC = Source Classification Code. ND = no data. NA = not applicable.

[b] References 13-14. Based on average sulfur content of natural gas, 2000 gr/$10^6$ scf.

[c] References 12-13,15-19. Expressed as $NO_2$.

[d] References 5,12-13,17-18,20-21.

[e] References 6-7.

[f] For tangentially fired units, use 275 lb/$10^6$ $ft^3$. Note: This number was originally developed for AP-42 based on limited data. No additional data are available to refine this number.

[g] No data; based on the factors for utility boilers.

ATTACHMENT B

CURRENT OPERATING PERMIT

# Florida Department of Environmental Regulation

Southwest District • 4520 Oak Fair Boulevard • Tampa, Florida 33610-7347 • 813-623-5561

Bob Martinez, Governor  Dale Twachtmann, Secretary  John Shearer, Assistant Secretary
Dr. Richard Garrity, Deputy Assistant Secretary


December 22, 1989

NOTICE OF PERMIT

Mr. Kenneth V. Ford
Manager Environmental Affairs
Seminole Fertilizer Corporation
Post Office Box 471
Bartow, FL 33830

Dear Mr. Ford:

Re: Polk County - AP
A053-169781

Enclosed is Permit Number A053-169781 to operate MAP/DAP Fertilizer Plant No. 3, issued pursuant to Section 403.087, Florida Statutes.

Persons whose substantial interests are affected by this permit have a right, pursuant to Section 120.57, Florida Statutes, to petition for an administrative determination (hearing) on it. The petition must conform to the requirements of Chapters 17-103 and 28-5.201, F.A.C., and must be filed (received) in the Department's Office of General Counsel, 2600 Blair Stone Road, Tallahassee, Florida 32399-2400, within fourteen (14) days of receipt of this notice. Failure to file a petition within the fourteen (14) days constitutes a waiver of any right such person has to an administrative determination (hearing) pursuant to Section 120.57, Florida Statutes. This permit is final and effective on the date filed with the Clerk of the Department unless a petition is filed in accordance with this paragraph or unless a request for extension of time in which to file a petition is filed within the time specified for filing a petition and conforms to Rule 17-103.070, F.A.C. Upon timely filing of a petition or a request for an extension of time, this permit will not be effective until further Order of the Department.

When the Order (Permit) is final, any party to the Order has the right to seek judicial review of the Order pursuant to Section 120.68, Florida Statutes, by the filing of a Notice of Appeal pursuant to Rule 9.110, Florida Rules of Appellate Procedure, with the Clerk of the Department in the Office of General Counsel, 2600 Blair Stone Road, Tallahassee, Florida 32399-2400, and by filing a copy of the Notice of Appeal accompanied by the applicable filing fees with the appropriate District Court of Appeal. The Notice of Appeal must be filed within 30 days from the date the Final Order is filed with the Clerk of the Department.

Executed in Tampa, Florida.

Sincerely,

For Mirza P. Baig
Air Permitting Engineer

MPB/mbq

CERTIFICATE OF SERVICE

This is to certify that this NOTICE OF PERMIT and all copies were mailed before the close of business on DEC 22 1989 to the listed persons.

FILING AND ACKNOWLEDGEMENT
FILED, on this date, pursuant to §120.52(10), Florida Statutes, with the designated Department Clerk, receipt of which is hereby acknowledged.

Marilyn Quispe
Clerk

DEC 22 1989
Date

# Florida Department of Environmental Regulation

**Southwest District** • 4520 Oak Fair Boulevard • Tampa, Florida 33610-7347 • 813-623-5561

Bob Martinez, Governor  Dale Twachtmann, Secretary  John Shearer, Assistant Secretary
Dr. Richard Garrity, Deputy Assistant Secretary


PERMITTEE:
Seminole Fertilizer Corporation
Post Office Box 471
Bartow, FL 33830

PERMIT/CERTIFICATION
Permit No.: AO53-169781
County: Polk
Expiration Date: 12/22/94
Project: MAP/DAP
Fertilizer Plant No. 3

This permit is issued under the provisions of Chapter 403, Florida Statutes, and Florida Administrative Code Rules 17-2 & 17-4. The above named permittee is hereby authorized to perform the work or operate the facility shown on the application and approved drawing(s), plans, and other documents, attached hereto or on file with the department and made a part hereof and specifically described as follows:

For the operation of Fertilizer Plant No. 3 to produce MAP/DAP at a designed capacity of 60 TPH. The process consists of dryer, cooler, reactor/granulator and screen vents. The dryer is fired by natural gas and/or fuel oil containing a maximum of 2.4% sulfur and a maximum heat input rate of 20 MMBTU/hour. Emissions from the dryer passes through a Ducon Venturi, cyclonic and cross-flow scrubber. Emissions from the reactor, granulator, screen vents and material handling systems pass through a separate RGV scrubbing system consisting of a venturi, cyclonic and cross-flow scrubber. The exhaust from all three processes is discharged through a single packed bed tail gas scrubber at a designed flow of about 130,000 ACFM.

Location: One mile north of S.R. 60 between Bartow and Mulberry

UTM: 17-409.8E  3086.7N  NEDS NO: 0046  Point ID: 01

Replaces Permit No.: AO53-72552

PERMITTEE:
Seminole Fertilizer Corp.

PERMIT NO: A053-169781
PROJECT: MAP/DAP Fertilizer Plant No. 3

SPECIFIC CONDITIONS:

1. A part of this permit is the attached 15 General Conditions.

2. In accordance with the Permittee's letter of 7/9/82, the maximum allowable particulate emission rate is 30.0 lbs./hour. This limit was set in order to qualify for the exemption from the particulate RACT requirements of Section 17-2.650(2), F.A.C.

3. In accordance with 40 CFR 60, Subpart V, "Standards for Performance for the Phosphate Fertilizer Industry: Diammonium Phosphate Plant", adopted by reference in Section 17-2.660, F.A.C., the maximum allowable fluoride emission rate shall not exceed 0.06 lb.F/ton of equivalent $P_2O_5$ feed or 1.8 lb.F per hour, whichever is less.

4. Visible emissions shall not be equal to or greater than 20% opacity in accordance with Subsection 17-2.610(2)(b), F.A.C.

5. Test the emissions for the following pollutant(s) at intervals of 6 months from the date November 11, 1989 and submit a copy of test data to the Air Section of the Southwest District Office within forty-five days of such testing (Subsection 17-2.700(2), (F.A.C.):

(X) Particulates
(X) Fluorides
(X) Opacity

6. Compliance with the emission limitations of Specific Condition Nos. 2, 3, and 4 shall be determined using EPA Methods 1, 2, 3, 4, 5, 9 and 13a or 13b contained in 40 CFR 60, Appendix A and adopted by reference in Section 17-2.700, F.A.C. The minimum requirements for stack sampling facilities, source sampling and reporting, shall be in accordance with Section 17-2.700, F.A.C. and 40 CFR 60, Appendix A. The visible emissions test must be conducted simultaneously with other tests and shall be for at least (60) minutes.

7. The Permittee shall install, calibrate, maintain and operate a flow monitoring device which can be used to determine the mass flow rate of phosphorus-bearing feed material to the process. The flow monitoring device will have an accuracy of ±5% over its operating range.

8. The Permittee shall maintain a daily record of equivalent $P_2O_5$ feed as described in §60.223(b).

9. Fugitive particulate and fluoride emissions from the process, conveying and storage equipment will be controlled by sealing and/or venting all fumes from the equipment to the permitted pollution abatement devices.

10. The permitted capacity of this No. 3 DAP/MAP (fertilizer) plant is 68.2 TPH of DAP (33.2 TPH of 100% $P_2O_5$) based on the rate at which the November 11, 1989 stack test was conducted. Approved compliance stack testing of emissions shall be conducted within approximately 10% of the permitted capacity when practical. A compliance test submitted at operating rates less than 90% of permitted capacity will automatically constitute an amended permit at the lesser rate until another test showing compliance at 90% of a higher capacity is submitted. If the permitted capacity of the plant is exceeded by at least 10%, a compliance test must be performed within 30 days of initiation of the higher rate and the results of the test shall be submitted to the Department. Acceptance of said test by the Department will automatically constitute an amended permit at the higher rate. Failure to submit the input rates or operation at conditions during testing which do not reflect actual operating conditions may invalidate the data (Section 403.161(1)(c), Florida Statutes).

11. The Southwest District Office of the Department of Environmental Regulation shall be notified in writing 15 days prior to compliance testing.

12. All reasonable precautions shall be taken to prevent and control generation of unconfined emissions of particulate matter in accordance with the provision in Subsection 17-2.610 (3), F.A.C. These provisions are applicable to any source, including, but not limited to, vehicular movement, transportation of materials, construction, alteration, demolition or wrecking, or industrial related activities such as loading, unloading, storing and handling.

13. The permittee shall install, calibrate, maintain, and operate a monitoring device which continuously measures and permanently records the total pressure drop across the scrubbing system. The monitoring device shall have an accuracy of $\pm 5\%$ over its operating range.

14. The dryer shall be fired by natural gas or fuel oil containing a maximum sulfur of 2.4%.

PERMITTEE:
Seminole Fertilizer Corp.

PERMIT NO: AO53-169781
PROJECT: MAP/DAP Fertilizer Plant No. 3

15. Submit for this facility, each calendar year, on or before March 1, an emission report for the preceding calendar year containing the following information:

(A) Annual amount of materials and/or fuels utilized.
(B) Annual emission (note calculation basis).
(C) Any changes in the information contained in the permit application.

16. An application to renew this operating permit shall be submitted to the Department 90 days prior to the expiration date of this permit.

Issued this 22 day of Dec. 19 89

STATE OF FLORIDA DEPARTMENT OF ENVIRONMENTAL REGULATION

For Richard D. Garrity, Ph.D.
Deputy Assistant Secretary

GENERAL CONDITIONS

1. The terms, conditions, requirements, limitations, and restrictions set forth herein are "Permit Conditions" and are binding and enforceable pursuant to the authority of Section 403.141, 403.727, or 403.859 through 403.861, Florida Statutes. The permittee is placed on notice that the Department will review this permit periodically and may initiate enforcement action for any violation of these conditions.

2. This permit is valid only for the specific processes and operations applied for and indicated in the approved drawings or exhibits. Any unauthorized deviation from the approved drawings, exhibits, specifications, or conditions of this permit may constitute grounds for revocation and enforcement action by the department.

3. As provided in Subsections 403.087(6) and 403.712(5), Florida Statutes, the issuance of this permit does not convey any vested rights or any exclusive privileges. Neither does it authorize any injury to public or private property or any invasion of personal rights, nor infringement of federal, state or local laws or regulations. This permit is not a waiver of or approval of any other Department permit that may be required for other aspects of the total project which are not addressed in the permit.

4. This permit conveys no title to land or water, does not constitute State recognition or acknowledgement of title, and does not constitute authority for the use of submerged lands unless herein provided and the necessary title or leasehold interests have been obtained from the State. Only the Trustees of the Internal Improvement Trust Fund may express State opinion as to title.

5. This permit does not relieve the permittee from liability for harm or injury to human health or welfare, animal or plant life or property caused by the construction or operation of this permitted source or from penalties therefore, nor does it allow the permittee to cause pollution in contravention of Florida Statutes and Department rules, unless specifically authorized by any order from the Department.

6. The permittee shall properly operate and maintain the facility and systems of treatment and control (and related appurtenances) that are installed or used by the permittee to achieve compliance with the conditions of this permit, as required by Department rules. This provision includes the operation of backup or auxiliary facilities or similar systems when necessary to achieve compliance with the conditions of the permit and when required by Department rules.

7. The permittee, by accepting this permit, specifically agrees to allow authorized Department personnel, upon presentation of credential or other documents as maybe required by law and at reasonable times, access to the premises, where the permitted activity is located or conducted:

GENERAL CONDITIONS (con't):

7. (con't):

a. Have access to and copy any records that must be kept under the conditions of the permit;

b. Inspect the facility, equipment, practices, or operations regulated or required under this permit; and

c. Sample or monitor any substances or parameters at any location reasonably necessary to assure compliance with this permit or department rules.

Reasonable time may depend on the nature of the concern being investigated.

8. If, for any reason, the permittee does not comply with or will be unable to comply with any condition or limitation specified in this permit, the permittee shall immediately provide the Department (17-6.130) with the following information:

(a) a description of and cause of noncompliance; and

(b) the period of noncompliance, including exact dates and times; or, if not corrected, the anticipated time the noncompliance is expected to continue, and steps being taken to reduce, eliminate, and prevent recurrence of the noncompliance.

The permittee shall be responsible for any and all damages which may result and may be subject to enforcement action by the Department for penalties or revocation of this permit.

9. In accepting this permit, the permittee understands and agrees that all records, notes, monitoring data and other information relating to the construction or operation of this permitted source, which are submitted to the Department, may be used by the Department as evidence in any enforcement case involving the permitted source arising under the Florida Statutes or Department rules, except where such use is prescribed by Section 403.73 and 403.111, Florida Statutes. Such evidence shall only be used to the extent it is consistent with the Florida Rules of Civil Procedures and appropriate evidentiary rules.

10. The permittee agrees to comply with changes in department rules and Florida Statutes after a reasonable time for compliance, provided, however, the permittee does not waive any other rights granted by Florida Statutes or Department rules.

11. This permit is transferable only upon Department approval in accordance with Florida Administrative Code Rules 17-4.120 and 17-30.300, as applicable. The permittee shall be liable for any non-compliance of the permitted activity until the transfer is approved by the department.

GENERAL CONDITIONS (con't):

12. This permit or a copy thereof shall be kept at the work site of the permitted activity.

13. This permit also constitutes:

( ) Determination of Best Available Control Technology (BACT)

( ) Determination of Prevention of Significant Deterioration (PSD)

( ) Certification of Compliance with State Water Quality Standards (Section 401, PL 92-500)

( ) Compliance with New Source Performance Standards

14. The permittee shall comply with the following:

a. Upon request, the permittee shall furnish all records and plans required under Department rules. During enforcement actions, the retention period for all records will be extended automatically, unless otherwise stipulated by the Department.

b. The permittee shall retain at the facility or other location designated by this permit records of all monitoring information (including all calibration and maintenance records and all original strip chart recordings for continuous monitoring instrumentation), copies of all reports required by this permit, and records of all data used to complete the application for this permit. These materials shall be retained at least three years from the date of the sample, measurement, report or application unless otherwise specified by Department rule.

c. Records of monitoring information shall include:

-the date, exact place, and time of sampling or measurement;
-the person responsible for performing the sampling or measurements;
-the date(s) analyses were performed;
-the person responsible for performing the analyses;
-the analytical techniques or methods used; and
-the results of such analyses.

15. When requested by the department, the permittee shall within a reasonable time furnish any information required by law which is needed to determine compliance with the permit. If the permittee becomes aware that relevant facts were not submitted or were incorrect in the permit application or in any report to the department, such facts or information shall be submitted or corrected promptly.

ATTACHMENT C

PM SOURCE INVENTORY

Table C-1. AAQS-PM10 Inventory for Proposed Cargill Project

| ISCST ID | Relative Coordinates (m | | QS | HS | TS | VS | DS |
|---|---|---|---|---|---|---|---|
| | X | Y | (g/s) | (m) | (K) | (m/s) | (m) |
| IMCKLNS | -13100 | -7300 | 2.52 | 52.4 | 314 | 21.4 | 1.37 |
| IMCCOLR | -13100 | -7300 | 0.79 | 26.21 | 394.3 | 32.3 | 0.91 |
| IMCMILL | -13100 | -7300 | 0.23 | 27.44 | 327.4 | 34.45 | 0.46 |
| AGSP2 | -2420 | -15235 | 4.002 | 3 | 344.1 | 20.69 | 0.55 |
| AGSP3 | -2420 | -15235 | 0.23 | 19.8 | 300.2 | 88.45 | 0.49 |
| AGSP4 | -2420 | -15235 | 4.318 | 18.3 | 323 | 9.7 | 0.3 |
| AGSP5 | -2420 | -15235 | 5.067 | 24.4 | 295.2 | 7.23 | 3.35 |
| AGSP6 | -2420 | -15235 | 5.067 | 24.4 | 296.9 | 7.8 | 3.35 |
| AGSP7 | -2420 | -15235 | 0.259 | 19.8 | 310.2 | 5.48 | 0.49 |
| AGSP8 | -2420 | -15235 | 0.547 | 26.8 | 307.4 | 9.24 | 0.91 |
| AGSP9 | -2420 | -15235 | 4.117 | 30.5 | 306.3 | 6.87 | 1.22 |
| AGSP10 | -2420 | -15235 | 3.023 | 38.1 | 327.4 | 14.55 | 3.05 |
| AGSP11 | -2420 | -15235 | 0.432 | 38.1 | 319.1 | 15.84 | 1.07 |
| AGSP12 | -2420 | -15235 | 0.029 | 16.2 | 298 | 1.72 | 0.46 |
| AGSP13 | -2420 | -15235 | 0.029 | 20.7 | 298 | 2.87 | 0.46 |
| AGSP14 | -2420 | -15235 | 0.029 | 29.3 | 298 | 1.15 | 0.4 |
| CFBM1 | -1520 | -4335 | 5.405 | 36.6 | 333 | 17.17 | 2.29 |
| CFBM2 | -1520 | -4335 | 5.09 | 42.7 | 298 | 22.77 | 0.76 |
| CFBM3 | -1520 | -4335 | 5.09 | 41.1 | 298 | 7.92 | 1.52 |
| CFBM4 | -1520 | -4335 | 1.756 | 19.8 | 298 | 15.36 | 1.22 |
| CFBM5 | -1520 | -4335 | 1.207 | 16.8 | 298 | 11.82 | 1.37 |
| CFBM6 | -1520 | -4335 | 0.063 | 33.2 | 298 | 7.19 | 0.46 |
| CFBM8 | -1520 | -4335 | 0.592 | 53 | 298 | 8.63 | 0.46 |
| CFPLT1 | -21920 | 29265 | 0.03 | 7.6 | 561 | 17.74 | 1.07 |
| CFPLT2 | -21920 | 29265 | 2.007 | 33.5 | 316.5 | 19.68 | 1.52 |
| CFPLT4 | -21920 | 29265 | 1.197 | 60.7 | 352.6 | 16.4 | 2.44 |
| CFPLT5 | -21920 | 29265 | 1.197 | 60.7 | 337.6 | 9.7 | 2.44 |
| CFPLT6 | -21920 | 29265 | 3.91 | 36.3 | 314.3 | 13.64 | 1.22 |
| CFPLT7 | -21920 | 29265 | 4.115 | 28.6 | 326.5 | 7.93 | 3.05 |
| CFPLT8 | -21920 | 29265 | 4.48 | 54.9 | 331.5 | 13.31 | 2.8 |
| CFPLT9 | -21920 | 29265 | 4.114 | 54.9 | 313.8 | 8.18 | 2.8 |
| CFPLT10 | -21920 | 29265 | 4.725 | 35.1 | 299.9 | 11.01 | 2.8 |
| CFPLT11 | -21920 | 29265 | 0.63 | 27.4 | 298.2 | 19.02 | 0.52 |
| CFPLT12 | -21920 | 29265 | 4.114 | 54.9 | 324.9 | 9.78 | 2.8 |
| CFPLT13 | -21920 | 29265 | 1.928 | 54.9 | 333.2 | 13.37 | 2.8 |
| CFPLT14 | -21920 | 29265 | 0.63 | 10.1 | 298.8 | 5.94 | 1.01 |
| CFPLT15 | -21920 | 29265 | 0.025 | 2.4 | 373.2 | 1.63 | 0.27 |
| CFPLT16 | -21920 | 29265 | 0.08 | 3.7 | 373.2 | 1.65 | 0.09 |
| CFPLT18 | -21920 | 29265 | 0.126 | 30.5 | 294.3 | 7.64 | 0.76 |
| CFPLT19 | -21920 | 29265 | 2.667 | 25.9 | 298.2 | 11.64 | 0.15 |
| CRGL1 | -47020 | -4535 | 1.036 | 20.7 | 314.7 | 11.09 | 1.07 |
| CRGL2 | -47020 | -4535 | 0.662 | 19.8 | 303 | 11.74 | 1.22 |
| CRGL3 | -47020 | -4535 | 1.267 | 20.1 | 333 | 16.17 | 0.61 |
| CRGL4 | -47020 | -4535 | 2.246 | 22.6 | 305.2 | 7.84 | 1.22 |
| CRGL5 | -47020 | -4535 | 1.036 | 20.7 | 319.1 | 1.16 | 1.07 |

Table C-1. AAQS-PM10 Inventory for Proposed Cargill Project

| ISCST ID | Relative Coordinates (m | | QS | HS | TS | VS | DS |
|---|---|---|---|---|---|---|---|
| | X | Y | (g/s) | (m) | (K) | (m/s) | (m) |
| CRGL6 | -47020 | -4535 | 0.662 | 19.8 | 301.9 | 14.43 | 1.22 |
| CRGL7 | -47020 | -4535 | 3.858 | 16.8 | 323.6 | 19.93 | 1.31 |
| CRGL8 | -47020 | -4535 | 0.979 | 9.8 | 308.6 | 8.04 | 0.4 |
| CRGL9 | -47020 | -4535 | 1.209 | 6.1 | 488.6 | 15.89 | 1.22 |
| CRGL10 | -47020 | -4535 | 2.534 | 40.5 | 315.2 | 15.38 | 2.13 |
| CRGL12 | -47020 | -4535 | 0.173 | 6.1 | 298.6 | 16.31 | 0.37 |
| CRGL13 | -47020 | -4535 | 0.547 | 9.1 | 298.6 | 13.2 | 1.07 |
| CRGL14 | -47020 | -4535 | 0.173 | 18.3 | 588.6 | 6.94 | 2.53 |
| CRGL15 | -47020 | -4535 | 0.605 | 12.2 | 298 | 11.21 | 0.46 |
| CRGL16 | -47020 | -4535 | 0.403 | 15.2 | 303.6 | 12.42 | 0.76 |
| CRGL17 | -47020 | -4535 | 0.029 | 12.2 | 321.9 | 9.94 | 0.52 |
| CRGL18 | -47020 | -4535 | 0.633 | 27.4 | 333.6 | 17.32 | 1.07 |
| CRGL19 | -47020 | -4535 | 0.144 | 26.5 | 331.9 | 8.18 | 0.37 |
| CRGL20 | -47020 | -4535 | 2.879 | 16.5 | 320.2 | 19.69 | 1.31 |
| CRGL21 | -47020 | -4535 | 0.72 | 27.4 | 334.1 | 21.96 | 1.01 |
| CRGL22 | -47020 | -4535 | 0.72 | 27.4 | 334.1 | 19.58 | 1.01 |
| CRGL23 | -47020 | -4535 | 0.086 | 13.7 | 298.6 | 16.31 | 0.37 |
| CRGL24 | -47020 | -4535 | 0.086 | 9.1 | 298.6 | 16.31 | 0.37 |
| CRGL25 | -47020 | -4535 | 0.144 | 22.9 | 298.6 | 12.42 | 0.58 |
| CRGL26 | -47020 | -4535 | 2.447 | 38.4 | 328.6 | 11.32 | 2.44 |
| CRGL27 | -47020 | -4535 | 0.118 | 11.6 | 298.6 | 17.75 | 0.82 |
| CNRV1 | -11220 | -2535 | 4.92 | 12.8 | 310.8 | 10.6 | 1.22 |
| CNRV2 | -11220 | -2535 | 1.18 | 15.8 | 321.9 | 20.18 | 0.76 |
| CNRV3 | -11220 | -2535 | 1.18 | 24.4 | 327.4 | 23.81 | 1.07 |
| CNRV4 | -11220 | -2535 | 4.434 | 24.7 | 327.4 | 3.77 | 2.29 |
| CNRV5 | -11220 | -2535 | 0.288 | 8.2 | 533 | 13.74 | 0.61 |
| CNRV6 | -11220 | -2535 | 0.432 | 11.9 | 533 | 8.91 | 0.98 |
| CNRV7 | -11220 | -2535 | 0.633 | 54.6 | 338.6 | 14.37 | 0.18 |
| CNRV8 | -11220 | -2535 | 0.202 | 55.5 | 310.8 | 2.97 | 0.43 |
| CNRV9 | -11220 | -2535 | 1.382 | 63.1 | 333 | 51.22 | 0.27 |
| CNRV10 | -11220 | -2535 | 0.633 | 63.1 | 330.2 | 21.12 | 0.43 |
| CNRV11 | -11220 | -2535 | 1.18 | 21.9 | 360.8 | 31.08 | 0.98 |
| CNRV12 | -11220 | -2535 | 0.633 | 63.1 | 330.2 | 21.12 | 0.43 |
| CNSDM2 | -16120 | 9565 | 0.202 | 13.7 | 349.7 | 14.17 | 0.55 |
| CNSDM3 | -16120 | 9565 | 0.202 | 16.5 | 298 | 19.96 | 0.55 |
| CNSDM4 | -16120 | 9565 | 4.405 | 24.4 | 308 | 79.21 | 1.37 |
| CNSDM5 | -16120 | 9565 | 0.115 | 16.5 | 298 | 19.14 | 0.43 |
| CNSDM6 | -16120 | 9565 | 1.756 | 46.3 | 295.2 | 11.16 | 1.77 |
| CNSDM7 | -16120 | 9565 | 0.662 | 9.8 | 295.8 | 10.76 | 0.46 |
| CNSDM8 | -16120 | 9565 | 1.641 | 46.3 | 300.2 | 9.61 | 1.77 |
| CNSDM9 | -16120 | 9565 | 1.756 | 24.4 | 319.1 | 6.2 | 1.68 |
| CNSDM10 | -16120 | 9565 | 1.9 | 45.7 | 313 | 18.34 | 1.77 |
| CNSDM11 | -16120 | 9565 | 0.173 | 32.6 | 298 | 33.69 | 0.37 |
| CNSDM12 | -16120 | 9565 | 0.259 | 24.7 | 315.2 | 9.05 | 0.82 |
| CNSDM13 | -16120 | 9565 | 1.67 | 30.5 | 338 | 11.98 | 1.37 |

Table C-1. AAQS-PM10 Inventory for Proposed Cargill Project

| ISCST ID | Relative Coordinates (m | | QS | HS | TS | VS | DS |
|---|---|---|---|---|---|---|---|
| | X | Y | (g/s) | (m) | (K) | (m/s) | (m) |
| CNSDM14 | -16120 | 9565 | 0.029 | 15.2 | 294.1 | 20.7 | 0.15 |
| CNSDM15 | -16120 | 9565 | 0.058 | 3 | 338.6 | 18.19 | 0.24 |
| CNSDM18 | -16120 | 9565 | 0.029 | 21.3 | 298 | 12.58 | 0.18 |
| CNSDM19 | -16120 | 9565 | 0.144 | 20.4 | 298 | 11.5 | 0.46 |
| CNSDM20 | -16120 | 9565 | 0.259 | 18.9 | 298 | 24.95 | 0.55 |
| CNSDM21 | -16120 | 9565 | 0.086 | 21.3 | 298 | 31.89 | 0.37 |
| CNSDM22 | -16120 | 9565 | 0.202 | 17.4 | 298 | 28.75 | 0.46 |
| CNSDM23 | -16120 | 9565 | 0.892 | 10.4 | 327.4 | 19.16 | 0.82 |
| CNSDM24 | -16120 | 9565 | 0.086 | 14 | 298 | 17.97 | 0.18 |
| CNSDM25 | -16120 | 9565 | 0.864 | 30.5 | 319.1 | 0.01 | 0.91 |
| CNSDM26 | -16120 | 9565 | 0.058 | 29.6 | 298 | 13.58 | 0.3 |
| CNSDM27 | -16120 | 9565 | 0.115 | 15.8 | 298 | 19.14 | 0.43 |
| FRMGB1 | -420 | -6635 | 3.224 | 39.3 | 327.4 | 7.47 | 2.29 |
| FRMGB2 | -420 | -6635 | 2.937 | 56.4 | 338 | 5.17 | 1.52 |
| FRMGB3 | -420 | -6635 | 3.8 | 39.3 | 319.1 | 10.66 | 2.13 |
| FRMGB4 | -420 | -6635 | 3.8 | 39.9 | 298 | 9.92 | 2.44 |
| FRMGB6 | -420 | -6635 | 0.144 | 12.2 | 366.3 | 0.03 | 0.61 |
| FRMGB7 | -420 | -6635 | 6.622 | 35.1 | 349.7 | 22.72 | 0.67 |
| FRMGB8 | -420 | -6635 | 3.397 | 39.3 | 327.4 | 6.84 | 2.29 |
| FRMGB9 | -420 | -6635 | 3.224 | 39.6 | 311.9 | 5.66 | 1.22 |
| FRMGB10 | -420 | -6635 | 0.662 | 30.5 | 349.7 | 8.7 | 2.29 |
| FRMGB11 | -420 | -6635 | 0.662 | 30.5 | 351.9 | 9.74 | 2.29 |
| FRMGB12 | -420 | -6635 | 0.086 | 12.2 | 366.3 | 0.03 | 0.61 |
| FRMGB13 | -420 | -6635 | 0.086 | 12.2 | 366.3 | 2.67 | 0.61 |
| FRMGB14 | -420 | -6635 | 3.311 | 50.3 | 298 | 8.86 | 0.7 |
| FRMGB15 | -420 | -6635 | 3.426 | 26.8 | 349.7 | 19.09 | 0.73 |
| FRMGB16 | -420 | -6635 | 2.937 | 39.3 | 326.9 | 12.41 | 2.29 |
| FRMGB17 | -420 | -6635 | 4.462 | 27.4 | 305.2 | 5.48 | 0.91 |
| IMCFL1 | -20320 | -18835 | 6.766 | 22.9 | 314.7 | 17.33 | 0.85 |
| IMCFL2 | -20320 | -18835 | 3.167 | 38.1 | 339.1 | 15.16 | 2.44 |
| IMCFL3 | -20320 | -18835 | 3.138 | 38.1 | 339.1 | 16.8 | 2.44 |
| IMCFL4 | -20320 | -18835 | 6.45 | 45.7 | 316.3 | 8.43 | 0.82 |
| IMCKG1 | -11720 | -11035 | 3.253 | 21.3 | 346.9 | 14.52 | 2.13 |
| IMCKG2 | -11720 | -11035 | 0.144 | 17.7 | 310.8 | 15.23 | 0.58 |
| IMCKG3 | -11720 | -11035 | 4.462 | 32.3 | 308 | 20.7 | 0.76 |
| IMCKG4 | -11720 | -11035 | 3.512 | 18.3 | 316.3 | 19.66 | 0.76 |
| IMCKG5 | -11720 | -11035 | 0.777 | 10.7 | 296.9 | 10.35 | 0.76 |
| IMCNW1 | -13420 | -7735 | 1.929 | 40.5 | 333 | 21.43 | 1.22 |
| IMCNW4 | -13420 | -7535 | 3.628 | 40.5 | 315.2 | 18.87 | 1.83 |
| IMCNW5 | -13420 | -7435 | 2.534 | 40.5 | 313.6 | 1.01 | 0.91 |
| IMCNW6 | -13120 | -7335 | 4.635 | 52.4 | 321.9 | 13.14 | 2.44 |
| IMCNW7 | -13220 | -7335 | 0.432 | 34.1 | 313.6 | 10.35 | 0.3 |
| IMCNW8 | -13220 | -7335 | 2.13 | 21.6 | 299.7 | 10.35 | 0.3 |
| IMCNW9 | -13220 | -7335 | 0.432 | 19.8 | 352.4 | 14.37 | 0.46 |
| IMCNW10 | -13220 | -7335 | 0.432 | 32.6 | 313.6 | 20.96 | 0.55 |

Table C-1. AAQS-PM10 Inventory for Proposed Cargill Project

| ISCST ID | Relative Coordinates (m | | QS | HS | TS | VS | DS |
|---|---|---|---|---|---|---|---|
| | X | Y | (g/s) | (m) | (K) | (m/s) | (m) |
| IMCNW11 | -13220 | -7335 | 0.115 | 30.5 | 299.7 | 54.62 | 0.46 |
| IMCNW12 | -13220 | -7335 | 1.785 | 52.1 | 316.3 | 17.97 | 1.83 |
| IMCNW13 | -13220 | -7335 | 0.605 | 12.2 | 315.2 | 20.12 | 0.91 |
| IMCNW14 | -13220 | -7335 | 0.432 | 31.7 | 313.6 | 21.48 | 0.49 |
| IMCNW17 | -13220 | -7335 | 0.432 | 13.7 | 313.6 | 9.7 | 0.3 |
| IMCNW18 | -13220 | -7335 | 0.432 | 18.3 | 313.6 | 9.7 | 0.3 |
| IMCNW19 | -13220 | -7335 | 1.785 | 52.1 | 316.3 | 17.97 | 1.83 |
| IMCNW20 | -13220 | -7335 | 0.432 | 17.4 | 352.4 | 22.96 | 0.4 |
| IMCNW21 | -13220 | -7335 | 0.432 | 5.2 | 380.2 | 38.27 | 0.4 |
| IMCNW23 | -13220 | -7335 | 0.777 | 51.8 | 316.3 | 1.97 | 1.52 |
| IMCNW24 | -13220 | -7335 | 0.432 | 34.1 | 313.6 | 10.35 | 0.3 |
| IMCNW25 | -13220 | -7335 | 0.662 | 7.6 | 333 | 10.49 | 1.31 |
| IMCNW26 | -13220 | -7335 | 0.432 | 32 | 313.6 | 42.69 | 0.3 |
| IMCNW27 | -13220 | -7335 | 0.202 | 5.5 | 313.6 | 9.7 | 0.3 |
| IMCNW28 | -13220 | -7335 | 0.432 | 35.7 | 313.6 | 38.81 | 0.3 |
| IMCNW29 | -13220 | -7335 | 0.806 | 12.2 | 299.7 | 9.39 | 0.27 |
| IMCNW30 | -13220 | -7335 | 0.432 | 18.3 | 313.6 | 16.17 | 0.3 |
| IMCNW31 | -13220 | -7335 | 0.058 | 30.5 | 311.9 | 12.58 | 0.55 |
| IMCNW32 | -13220 | -7335 | 0.576 | 28.7 | 352.4 | 10.78 | 1.83 |
| IMCNW33 | -13220 | -7335 | 0.173 | 33.5 | 316.3 | 13.86 | 0.43 |
| IMCNW34 | -13220 | -7335 | 0.202 | 26.2 | 299.7 | 16.5 | 0.21 |
| IMCNW35 | -13220 | -7335 | 0.345 | 32.6 | 338.6 | 15.84 | 1.07 |
| IMCNW36 | -13220 | -7335 | 0.461 | 19.8 | 313.6 | 51.75 | 0.3 |
| IMCNW37 | -13220 | -7335 | 0.432 | 36 | 313.6 | 10.35 | 0.3 |
| IMCNY1 | 4780 | -6435 | 1.9 | 8.2 | 302.4 | 16.17 | 0.61 |
| IMCNY2 | 4780 | -6435 | 0.345 | 8.2 | 296.9 | 4.85 | 0.61 |
| IMCNY3 | 4780 | -6435 | 3.224 | 7.6 | 296.9 | 11.5 | 0.46 |
| IMCNY4 | 4780 | -6435 | 7.37 | 7.3 | 316.3 | 8.09 | 0.61 |
| IMCNY5 | 4780 | -6435 | 1.9 | 13.1 | 303 | 18.11 | 0.61 |
| IMCNY6 | 4780 | -6435 | 4.347 | 41.1 | 288.6 | 16.75 | 0.85 |
| IMCNY8 | 4780 | -6435 | 1.267 | 16.5 | 319.1 | 19.4 | 0.3 |
| IMCNY12 | 4780 | -6435 | 12.869 | 11.6 | 333 | 7.17 | 0.58 |
| IMCNY13 | 4780 | -6435 | 1.9 | 8.2 | 302.4 | 16.17 | 0.61 |
| IMCNY14 | 4780 | -6435 | 4.405 | 45.7 | 310.8 | 15.84 | 1.07 |
| LLMC5 | -720 | 19365 | 0.115 | 6.1 | 652.4 | 23.54 | 0.79 |
| LLMC6 | -720 | 19365 | 40.82 | 76.2 | 349.7 | 32.85 | 4.88 |
| MMM1 | -11720 | -1735 | 3.109 | 25.9 | 338.6 | 16.1 | 2.29 |
| MMM2 | -11520 | -1635 | 0.144 | 4.6 | 312.4 | 16.5 | 0.43 |
| MMM3 | -11620 | -1635 | 6.996 | 25.9 | 296.9 | 19.4 | 1.52 |
| MMM6 | -11520 | -1535 | 1.555 | 24.4 | 326.9 | 11.68 | 0.49 |
| MMM7 | -11520 | -1535 | 1.123 | 30.5 | 338.6 | 19.02 | 1.1 |
| MMM8 | -11520 | -1535 | 1.411 | 24.4 | 326.9 | 11.68 | 0.49 |
| MMM9 | -11520 | -1435 | 1.382 | 12.2 | 344.1 | 11.83 | 1.07 |
| MMM10 | -11520 | -1435 | 0.058 | 24.1 | 349.7 | 14.64 | 0.24 |
| MMM11 | -11520 | -1435 | 0.72 | 4 | 521.9 | 2.12 | 0.76 |

Table C-1. AAQS-PM10 Inventory for Proposed Cargill Project

| ISCST ID | Relative Coordinates (m | | QS (g/s) | HS (m) | TS (K) | VS (m/s) | DS (m) |
|---|---|---|---|---|---|---|---|
| | X | Y | | | | | |
| MMM12 | -11520 | -1435 | 1.958 | 25.9 | 299.7 | 14.54 | 1.68 |
| TCOBB1 | -48020 | -11735 | 0.029 | 42.4 | 333 | 18.19 | 0.49 |
| TCOBB2 | -48020 | -11735 | 2.102 | 34.4 | 394.1 | 123.77 | 0.27 |
| TCOBB3 | -48020 | -11735 | 0.662 | 31.1 | 394.1 | 16.04 | 0.76 |
| TCOBB4 | -48020 | -11735 | 0.173 | 54.6 | 298.6 | 21.04 | 0.52 |
| TCOBB7 | -48020 | -11735 | 4.615 | 149.4 | 341.9 | 18.21 | 7.32 |
| TCOBB13 | -48220 | -11235 | 4.175 | 22.9 | 770.8 | 18.74 | 4.27 |
| TCOPP1 | -7420 | -19335 | 2.02 | 6.1 | 533 | 13.1 | 0.9 |
| TCOPP2 | -7420 | -19335 | 7.43 | 45.7 | 400 | 16.79 | 5.8 |
| TCOPP3 | -7420 | -19335 | 3.15 | 60.7 | 1033 | 9.14 | 1.07 |
| USAC1 | 3280 | -435 | 2.85 | 22.6 | 299.7 | 48.51 | 0.61 |
| USAC2 | 3280 | -435 | 5.038 | 19.2 | 308.6 | 9.31 | 1.52 |
| USAC3 | 3280 | -435 | 4.866 | 39.9 | 327.4 | 11.09 | 2.13 |

Source: FDEP

Table C-2. PSD-PM Inventory for Proposed Cargill Project

| ISCST ID | Relative Coordinates (m | | QS | HS | TS | VS | DS |
|---|---|---|---|---|---|---|---|
| | X | Y | (g/s) | (m) | (K) | (m/s) | (m) |
| IMCKLN | -13100 | -7300 | 2.52 | 52.4 | 314 | 21.4 | 1.37 |
| IMCCOLR | -13100 | -7300 | 0.79 | 26.21 | 394.3 | 32.3 | 0.91 |
| IMCMILL | -13100 | -7300 | 0.23 | 27.44 | 327.4 | 34.45 | 0.46 |
| AGSP2 | -2420 | -15235 | 4.002 | 3 | 344.1 | 20.69 | 0.55 |
| AGSP3 | -2420 | -15235 | 0.23 | 19.8 | 300.2 | 88.45 | 0.49 |
| AGSP4 | -2420 | -15235 | 4.318 | 18.3 | 323 | 9.7 | 0.3 |
| AGSP5 | -2420 | -15235 | 5.067 | 24.4 | 295.2 | 7.23 | 3.35 |
| AGSP6 | -2420 | -15235 | 5.067 | 24.4 | 296.9 | 7.8 | 3.35 |
| AGSP7 | -2420 | -15235 | 0.259 | 19.8 | 310.2 | 5.48 | 0.49 |
| AGSP10 | -2420 | -15235 | 3.023 | 38.1 | 327.4 | 14.55 | 3.05 |
| AGSP11 | -2420 | -15235 | 0.432 | 38.1 | 319.1 | 15.84 | 1.07 |
| CFBM1 | -1520 | -4335 | 5.405 | 36.6 | 333 | 17.17 | 2.29 |
| CFBM2 | -1520 | -4335 | 5.09 | 42.7 | 298 | 22.77 | 0.76 |
| CFBM3 | -1520 | -4335 | 5.09 | 41.1 | 298 | 7.92 | 1.52 |
| CFBM4 | -1520 | -4335 | 1.756 | 19.8 | 298 | 15.36 | 1.22 |
| CFBM5 | -1520 | -4335 | 1.207 | 16.8 | 298 | 11.82 | 1.37 |
| CFBM6 | -1520 | -4335 | 0.063 | 33.2 | 298 | 7.19 | 0.46 |
| CFBM8 | -1520 | -4335 | 0.592 | 53 | 298 | 8.63 | 0.46 |
| CFPLT2 | -21920 | 29265 | 2.007 | 33.5 | 316.5 | 19.68 | 1.52 |
| CFPLT4 | -21920 | 29265 | 1.197 | 60.7 | 352.6 | 16.4 | 2.44 |
| CFPLT5 | -21920 | 29265 | 1.197 | 60.7 | 337.6 | 9.7 | 2.44 |
| CFPLT6 | -21920 | 29265 | 3.91 | 36.3 | 314.3 | 13.64 | 1.22 |
| CFPLT7 | -21920 | 29265 | 4.115 | 28.6 | 326.5 | 7.93 | 3.05 |
| CFPLT10 | -21920 | 29265 | 4.725 | 35.1 | 299.9 | 11.01 | 2.8 |
| CFPLT11 | -21920 | 29265 | 0.63 | 27.4 | 298.2 | 19.02 | 0.52 |
| CFPLT14 | -21920 | 29265 | 0.63 | 10.1 | 298.8 | 5.94 | 1.01 |
| CFPLT18 | -21920 | 29265 | 0.126 | 30.5 | 294.3 | 7.64 | 0.76 |
| CFPLT19 | -21920 | 29265 | 2.667 | 25.9 | 298.2 | 11.64 | 0.15 |
| CRGL1 | -47020 | -4535 | 1.036 | 20.7 | 314.7 | 11.09 | 1.07 |
| CRGL2 | -47020 | -4535 | 0.662 | 19.8 | 303 | 11.74 | 1.22 |
| CRGL3 | -47020 | -4535 | 1.267 | 20.1 | 333 | 16.17 | 0.61 |
| CRGL4 | -47020 | -4535 | 2.246 | 22.6 | 305.2 | 7.84 | 1.22 |
| CRGL5 | -47020 | -4535 | 1.036 | 20.7 | 319.1 | 1.16 | 1.07 |
| CRGL6 | -47020 | -4535 | 0.662 | 19.8 | 301.9 | 14.43 | 1.22 |
| CRGL7 | -47020 | -4535 | 3.858 | 16.8 | 323.6 | 19.93 | 1.31 |
| CRGL8 | -47020 | -4535 | 0.979 | 9.8 | 308.6 | 8.04 | 0.4 |
| CRGL9 | -47020 | -4535 | 1.209 | 6.1 | 488.6 | 15.89 | 1.22 |
| CRGL12 | -47020 | -4535 | 0.173 | 6.1 | 298.6 | 16.31 | 0.37 |
| CRGL13 | -47020 | -4535 | 0.547 | 9.1 | 298.6 | 13.2 | 1.07 |
| CRGL14 | -47020 | -4535 | 0.173 | 18.3 | 588.6 | 6.94 | 2.53 |
| CRGL15 | -47020 | -4535 | 0.605 | 12.2 | 298 | 11.21 | 0.46 |
| CRGL16 | -47020 | -4535 | 0.403 | 15.2 | 303.6 | 12.42 | 0.76 |
| CRGL17 | -47020 | -4535 | 0.029 | 12.2 | 321.9 | 9.94 | 0.52 |
| CRGL18 | -47020 | -4535 | 0.633 | 27.4 | 333.6 | 17.32 | 1.07 |
| CRGL19 | -47020 | -4535 | 0.144 | 26.5 | 331.9 | 8.18 | 0.37 |

Table C-2. PSD-PM Inventory for Proposed Cargill Project

| ISCST ID | Relative Coordinates (m | | QS | HS | TS | VS | DS |
|---|---|---|---|---|---|---|---|
| | X | Y | (g/s) | (m) | (K) | (m/s) | (m) |
| CRGL20 | -47020 | -4535 | 2.879 | 16.5 | 320.2 | 19.69 | 1.31 |
| CRGL21 | -47020 | -4535 | 0.72 | 27.4 | 334.1 | 21.96 | 1.01 |
| CRGL22 | -47020 | -4535 | 0.72 | 27.4 | 334.1 | 19.58 | 1.01 |
| CRGL23 | -47020 | -4535 | 0.086 | 13.7 | 298.6 | 16.31 | 0.37 |
| CRGL24 | -47020 | -4535 | 0.086 | 9.1 | 298.6 | 16.31 | 0.37 |
| CRGL25 | -47020 | -4535 | 0.144 | 22.9 | 298.6 | 12.42 | 0.58 |
| CRGL27 | -47020 | -4535 | 0.118 | 11.6 | 298.6 | 17.75 | 0.82 |
| CNRV7 | -11220 | -2535 | 0.633 | 54.6 | 338.6 | 14.37 | 0.18 |
| CNRV8 | -11220 | -2535 | 0.202 | 55.5 | 310.8 | 2.97 | 0.43 |
| CNRV12 | -11220 | -2535 | 0.633 | 63.1 | 330.2 | 21.12 | 0.43 |
| CNSDM2 | -16120 | 9565 | 0.202 | 13.7 | 349.7 | 14.17 | 0.55 |
| CNSDM3 | -16120 | 9565 | 0.202 | 16.5 | 298 | 19.96 | 0.55 |
| CNSDM4 | -16120 | 9565 | 4.405 | 24.4 | 308 | 79.21 | 1.37 |
| CNSDM5 | -16120 | 9565 | 0.115 | 16.5 | 298 | 19.14 | 0.43 |
| CNSDM7 | -16120 | 9565 | 0.662 | 9.8 | 295.8 | 10.76 | 0.46 |
| CNSDM9 | -16120 | 9565 | 1.756 | 24.4 | 319.1 | 6.2 | 1.68 |
| CNSDM10 | -16120 | 9565 | 1.9 | 45.7 | 313 | 18.34 | 1.77 |
| CNSDM11 | -16120 | 9565 | 0.173 | 32.6 | 298 | 33.69 | 0.37 |
| CNSDM12 | -16120 | 9565 | 0.259 | 24.7 | 315.2 | 9.05 | 0.82 |
| CNSDM13 | -16120 | 9565 | 1.67 | 30.5 | 338 | 11.98 | 1.37 |
| CNSDM14 | -16120 | 9565 | 0.029 | 15.2 | 294.1 | 20.7 | 0.15 |
| CNSDM15 | -16120 | 9565 | 0.058 | 3 | 338.6 | 18.19 | 0.24 |
| CNSDM18 | -16120 | 9565 | 0.029 | 21.3 | 298 | 12.58 | 0.18 |
| CNSDM19 | -16120 | 9565 | 0.144 | 20.4 | 298 | 11.5 | 0.46 |
| CNSDM20 | -16120 | 9565 | 0.259 | 18.9 | 298 | 24.95 | 0.55 |
| CNSDM21 | -16120 | 9565 | 0.086 | 21.3 | 298 | 31.89 | 0.37 |
| CNSDM22 | -16120 | 9565 | 0.202 | 17.4 | 298 | 28.75 | 0.46 |
| CNSDM23 | -16120 | 9565 | 0.892 | 10.4 | 327.4 | 19.16 | 0.82 |
| CNSDM24 | -16120 | 9565 | 0.086 | 14 | 298 | 17.97 | 0.18 |
| CNSDM25 | -16120 | 9565 | 0.864 | 30.5 | 319.1 | 0.01 | 0.91 |
| CNSDM26 | -16120 | 9565 | 0.058 | 29.6 | 298 | 13.58 | 0.3 |
| CNSDM27 | -16120 | 9565 | 0.115 | 15.8 | 298 | 19.14 | 0.43 |
| FRMGB2 | -420 | -6635 | 2.937 | 56.4 | 338 | 5.17 | 1.52 |
| FRMGB3 | -420 | -6635 | 3.8 | 39.3 | 319.1 | 10.66 | 2.13 |
| FRMGB6 | -420 | -6635 | 0.144 | 12.2 | 366.3 | 0.03 | 0.61 |
| FRMGB7 | -420 | -6635 | 6.622 | 35.1 | 349.7 | 22.72 | 0.67 |
| FRMGB9 | -420 | -6635 | 3.224 | 39.6 | 311.9 | 5.66 | 1.22 |
| FRMGB12 | -420 | -6635 | 0.086 | 12.2 | 366.3 | 0.03 | 0.61 |
| FRMGB13 | -420 | -6635 | 0.086 | 12.2 | 366.3 | 2.67 | 0.61 |
| FRMGB14 | -420 | -6635 | 3.311 | 50.3 | 298 | 8.86 | 0.7 |
| FRMGB15 | -420 | -6635 | 3.426 | 26.8 | 349.7 | 19.09 | 0.73 |
| IMCFL1 | -20320 | -18835 | 6.766 | 22.9 | 314.7 | 17.33 | 0.85 |
| IMCFL4 | -20320 | -18835 | 6.45 | 45.7 | 316.3 | 8.43 | 0.82 |
| IMCNW9 | -13220 | -7335 | 0.432 | 19.8 | 352.4 | 14.37 | 0.46 |
| IMCNW10 | -13220 | -7335 | 0.432 | 32.6 | 313.6 | 20.96 | 0.55 |

Table C-2. PSD-PM Inventory for Proposed Cargill Project

| ISCST ID | Relative Coordinates (m | | QS | HS | TS | VS | DS |
|---|---|---|---|---|---|---|---|
| | X | Y | (g/s) | (m) | (K) | (m/s) | (m) |
| IMCNW11 | -13220 | -7335 | 0.115 | 30.5 | 299.7 | 54.62 | 0.46 |
| IMCNW14 | -13220 | -7335 | 0.432 | 31.7 | 313.6 | 21.48 | 0.49 |
| IMCNW20 | -13220 | -7335 | 0.432 | 17.4 | 352.4 | 22.96 | 0.4 |
| IMCNW21 | -13220 | -7335 | 0.432 | 5.2 | 380.2 | 38.27 | 0.4 |
| IMCNW23 | -13220 | -7335 | 0.777 | 51.8 | 316.3 | 1.97 | 1.52 |
| IMCNW25 | -13220 | -7335 | 0.662 | 7.6 | 333 | 10.49 | 1.31 |
| IMCNW29 | -13220 | -7335 | 0.806 | 12.2 | 299.7 | 9.39 | 0.27 |
| IMCNW31 | -13220 | -7335 | 0.058 | 30.5 | 311.9 | 12.58 | 0.55 |
| IMCNW32 | -13220 | -7335 | 0.576 | 28.7 | 352.4 | 10.78 | 1.83 |
| IMCNW33 | -13220 | -7335 | 0.173 | 33.5 | 316.3 | 13.86 | 0.43 |
| IMCNW34 | -13220 | -7335 | 0.202 | 26.2 | 299.7 | 16.5 | 0.21 |
| IMCNW35 | -13220 | -7335 | 0.345 | 32.6 | 338.6 | 15.84 | 1.07 |
| IMCNW37 | -13220 | -7335 | 0.432 | 36 | 313.6 | 10.35 | 0.3 |
| IMCNY1 | 4780 | -6435 | 1.9 | 8.2 | 302.4 | 16.17 | 0.61 |
| IMCNY2 | 4780 | -6435 | 0.345 | 8.2 | 296.9 | 4.85 | 0.61 |
| IMCNY3 | 4780 | -6435 | 3.224 | 7.6 | 296.9 | 11.5 | 0.46 |
| IMCNY4 | 4780 | -6435 | 7.37 | 7.3 | 316.3 | 8.09 | 0.61 |
| IMCNY5 | 4780 | -6435 | 1.9 | 13.1 | 303 | 18.11 | 0.61 |
| IMCNY6 | 4780 | -6435 | 4.347 | 41.1 | 288.6 | 16.75 | 0.85 |
| IMCNY8 | 4780 | -6435 | 1.267 | 16.5 | 319.1 | 19.4 | 0.3 |
| IMCNY12 | 4780 | -6435 | 12.869 | 11.6 | 333 | 7.17 | 0.58 |
| IMCNY13 | 4780 | -6435 | 1.9 | 8.2 | 302.4 | 16.17 | 0.61 |
| IMCNY14 | 4780 | -6435 | 4.405 | 45.7 | 310.8 | 15.84 | 1.07 |
| LLMC6 | -720 | 19365 | 40.82 | 76.2 | 349.7 | 32.85 | 4.88 |
| MMM2 | -11520 | -1635 | 0.144 | 4.6 | 312.4 | 16.5 | 0.43 |
| MMM3 | -11620 | -1635 | 6.996 | 25.9 | 296.9 | 19.4 | 1.52 |
| MMM6 | -11520 | -1535 | 1.555 | 24.4 | 326.9 | 11.68 | 0.49 |
| MMM7 | -11520 | -1535 | 1.123 | 30.5 | 338.6 | 19.02 | 1.1 |
| MMM8 | -11520 | -1535 | 1.411 | 24.4 | 326.9 | 11.68 | 0.49 |
| MMM9 | -11520 | -1435 | 1.382 | 12.2 | 344.1 | 11.83 | 1.07 |
| MMM10 | -11520 | -1435 | 0.058 | 24.1 | 349.7 | 14.64 | 0.24 |
| MMM11 | -11520 | -1435 | 0.72 | 4 | 521.9 | 2.12 | 0.76 |
| MMM12 | -11520 | -1435 | 1.958 | 25.9 | 299.7 | 14.54 | 1.68 |
| TCOBB1 | -48020 | -11735 | 0.029 | 42.4 | 333 | 18.19 | 0.49 |
| TCOBB2 | -48020 | -11735 | 2.102 | 34.4 | 394.1 | 123.77 | 0.27 |
| TCOBB3 | -48020 | -11735 | 0.662 | 31.1 | 394.1 | 16.04 | 0.76 |
| TCOBB4 | -48020 | -11735 | 0.173 | 54.6 | 298.6 | 21.04 | 0.52 |
| TCOPP1 | -7420 | -19335 | 2.02 | 6.1 | 533 | 13.1 | 0.9 |
| TCOPP2 | -7420 | -19335 | 7.43 | 45.7 | 400 | 16.79 | 5.8 |
| TCOPP3 | -7420 | -19335 | 3.15 | 60.7 | 1033 | 9.14 | 1.07 |
| USAC1 | 3280 | -435 | 2.85 | 22.6 | 299.7 | 48.51 | 0.61 |
| USAC2 | 3280 | -435 | 5.038 | 19.2 | 308.6 | 9.31 | 1.52 |
| USAC3 | 3280 | -435 | 4.866 | 39.9 | 327.4 | 11.09 | 2.13 |

Source: FDEP

RECEIVED
OCT 30 1998
BUREAU OF
AIR REGULATION

SUMMARY OF TEST DATA

PLANT : CARGILL - BARTOW UNIT : #3 FERTILIZER RUN NUMBERS :1, 2, 3

TEST DATE : 6/9/97

| | #1 | #2 | #3 | AVERAGES |
|---|---|---|---|---|
| DATE | 6/9/97 | 6/9/97 | 6/9/97 | |
| START TIME | 11:42 | 12:53 | 14:00 | |
| END TIME | 12:44 | 13:55 | 15:04 | |
| STACK DIAMETER (INCHES) | 90 | 90 | 90 | |
| NOZZLE DIAMETER (INCHES) | 0.240 | 0.240 | 0.240 | |
| TEST TIME (MINUTES) | 60 | 60 | 60 | |
| NUMBER OF TEST POINTS PER RUN | 12 | 12 | 12 | |
| STACK GAS TEMPERATURE (°F) | 169.7 | 170.3 | 169 | 169.5 |
| STACK GAS MOISTURE (%) | 15.63 | 14.48 | 15.01 | 15.04 |
| STACK GAS MOLECULAR WEIGHT | 28.12 | 28.26 | 28.20 | 28.19 |
| STACK GAS VOLUME SAMPLED (CUBIC FEET) | 42.797 | 42.715 | 42.420 | 42.644 |
| VOLUME SAMPLED (SCF @ 68°F) | 41.942 | 41.710 | 41.325 | 41.659 |
| STACK GAS VELOCITY (FEET PER SECOND) | 52.74 | 52.05 | 51.53 | 52.11 |
| STACK GAS FLOW RATE (ACFM) | 139794.2 | 137968.7 | 136602.7 | 138121.8 |
| STACK GAS FLOW RATE (DSCFM @ 68°F) | 98799.9 | 99143.6 | 97820.8 | 98588.1 |
| FLUORIDE COLLECTED (MGS) | 2.3685 | 0.586 | 0.5935 | |
| FLUORIDE CONC (GRAINS/DSCF) | 0.0009 | 0.0002 | 0.0002 | **0.0004** |
| FLUORIDE MASS RATE (LBS/HOUR) | 0.738 | 0.183 | 0.185 | **0.368** |
| PARTICULATE COLLECTED (GMS) | 0.0011 | 0.0016 | 0.0012 | |
| PARTICULATE CONC (GRAINS/DSCF) | 0.0004 | 0.0006 | 0.0004 | **0.0005** |
| PARTICULATE MASS RATE (LBS/HOUR) | 0.3426 | 0.4984 | 0.3738 | **0.405** |
| ISOKINETIC SAMPLING RATE, %I | 99.51 | 98.62 | 99.03 | |

FIELD DATA AND SAMPLES UNDER THE CONTROL OF: TIM CAPELLE

LABORATORY ANALYSIS UNDER THE CONTROL OF: CARGILL

# STEVENSON AND ASSOCIATES

(813) 651-0878

| | |
|---|---|
| FACILITY NAME | CARGILL |
| PERMIT NUMBER | A083-169781 |
| SOURCE | #3 FERTILIZER |
| NEDS NO. | 0046 |
| I.D. NO. | 001 |
| ADDRESS | 3200 State Road 60 West |
| CONTACT | DAVID BLANK |
| COUNTY | POLK |
| ZIP | 33830 |
| CITY | BARTOW |
| PHONE | (941) 533-2171 |
| PROCESS EQUIPMENT | MAP/DAP PLANT |
| OPERATING RATE | 71.5 TPH |
| CONTROL EQUIPMENT | WET SCRUBBER |
| OPERATING MODE | 100 % |
| FUEL TYPE/RATE | |
| MATERIAL TYPE/RATE | DAP |
| DESCRIBE EMISSION POINT START | Stack EXIT |
| DESCRIBE EMISSION POINT STOP | SAME |
| HEIGHT ABOVE GROUND LEVEL START | 100' |
| HEIGHT ABOVE GROUND LEVEL STOP | ✓ |
| HEIGHT RELATIVE TO OBSERVER START | 95' |
| HEIGHT RELATIVE TO OBSERVER STOP | ✓ |
| DISTANCE FROM OBSERVER START | 500 |
| DISTANCE FROM OBSERVER STOP | ✓ |
| DIRECTION FROM OBSERVER START | S |
| DIRECTION FROM OBSERVER STOP | S |
| DESCRIBE EMISSIONS START | plume-no emissions |
| DESCRIBE EMISSIONS STOP | |
| EMISSION COLOR START | None |
| EMISSION COLOR STOP | |
| PLUME TYPE | CONTINUOUS ☒ INTERMITTENT ☐ |
| WATER DROPLETS PRESENT | NO ☐ YES ☒ |
| WATER DROPLET PLUME | ATTACHED ☒ DETACHED ☐ |
| POINT IN THE PLUME AT WHICH OPACITY WAS DETERMINED START | 100' W of stack |
| POINT IN THE PLUME AT WHICH OPACITY WAS DETERMINED STOP | same |
| DESCRIBE BACKGROUND START | Clouds |
| DESCRIBE BACKGROUND STOP | ✓ |
| AMBIENT TEMP START | 75° |
| AMBIENT TEMP STOP | ✓ |
| BACKGROUND COLOR START | white |
| BACKGROUND COLOR STOP | ✓ |
| SKY CONDITIONS START | cloudy |
| SKY CONDITIONS STOP | ✓ |
| WIND SPEED START | 3-10 |
| WIND SPEED STOP | ✓ |
| WIND DIRECTION START | ENE |
| WIND DIRECTION STOP | ✓ |

| OBSERVATION DATE | START TIME | STOP TIME |
|---|---|---|
| 6/9/97 | 11:40 | 12:40 |

| MIN \ SEC | 0 | 15 | 30 | 45 | MIN \ SEC | 0 | 15 | 30 | 45 |
|---|---|---|---|---|---|---|---|---|---|
| 1 | 0 | 0 | 0 | 0 | 31 | 0 | 0 | 0 | 0 |
| 2 | 0 | 0 | 0 | 0 | 32 | 0 | 0 | 0 | 0 |
| 3 | 0 | 0 | 0 | 0 | 33 | 0 | 0 | 0 | 0 |
| 4 | 0 | 0 | 0 | 0 | 34 | 0 | 0 | 0 | 0 |
| 5 | 0 | 0 | 0 | 0 | 35 | 0 | 0 | 0 | 0 |
| 6 | 0 | 0 | 0 | 0 | 36 | 0 | 0 | 0 | 0 |
| 7 | 0 | 0 | 0 | 0 | 37 | 0 | 0 | 0 | 0 |
| 8 | 0 | 0 | 0 | 0 | 38 | 0 | 0 | 0 | 0 |
| 9 | 0 | 0 | 0 | 0 | 39 | 0 | 0 | 0 | 0 |
| 10 | 0 | 0 | 0 | 0 | 40 | 0 | 0 | 0 | 0 |
| 11 | 0 | 0 | 0 | 0 | 41 | 0 | 0 | 0 | 0 |
| 12 | 0 | 0 | 0 | 0 | 42 | 0 | 0 | 0 | 0 |
| 13 | 0 | 0 | 0 | 0 | 43 | 0 | 0 | 0 | 0 |
| 14 | 0 | 0 | 0 | 0 | 44 | 0 | 0 | 0 | 0 |
| 15 | 0 | 0 | 0 | 0 | 45 | 0 | 0 | 0 | 0 |
| 16 | 0 | 0 | 0 | 0 | 46 | 0 | 0 | 0 | 0 |
| 17 | 0 | 0 | 0 | 0 | 47 | 0 | 0 | 0 | 0 |
| 18 | 0 | 0 | 0 | 0 | 48 | 0 | 0 | 0 | 0 |
| 19 | 0 | 0 | 0 | 0 | 49 | 0 | 0 | 0 | 0 |
| 20 | 0 | 0 | 0 | 0 | 50 | 0 | 0 | 0 | 0 |
| 21 | 0 | 0 | 0 | 0 | 51 | 0 | 0 | 0 | 0 |
| 22 | 0 | 0 | 0 | 0 | 52 | 0 | 0 | 0 | 0 |
| 23 | 0 | 0 | 0 | 0 | 53 | 0 | 0 | 0 | 0 |
| 24 | 0 | 0 | 0 | 0 | 54 | 0 | 0 | 0 | 0 |
| 25 | 0 | 0 | 0 | 0 | 55 | 0 | 0 | 0 | 0 |
| 26 | 0 | 0 | 0 | 0 | 56 | 0 | 0 | 0 | 0 |
| 27 | 0 | 0 | 0 | 0 | 57 | 0 | 0 | 0 | 0 |
| 28 | 0 | 0 | 0 | 0 | 58 | 0 | 0 | 0 | 0 |
| 29 | 0 | 0 | 0 | 0 | 59 | 0 | 0 | 0 | 0 |
| 30 | 0 | 0 | 0 | 0 | 60 | 0 | 0 | 0 | 0 |

| AVERAGE OPACITY FOR HIGHEST 24 CONSECUTIVE READINGS | RANGE OF OPACITY READINGS MIN. | MAX. |
|---|---|---|
| 0 | 0 | 0 |

SOURCE LAYOUT SKETCH — Draw North Arrow

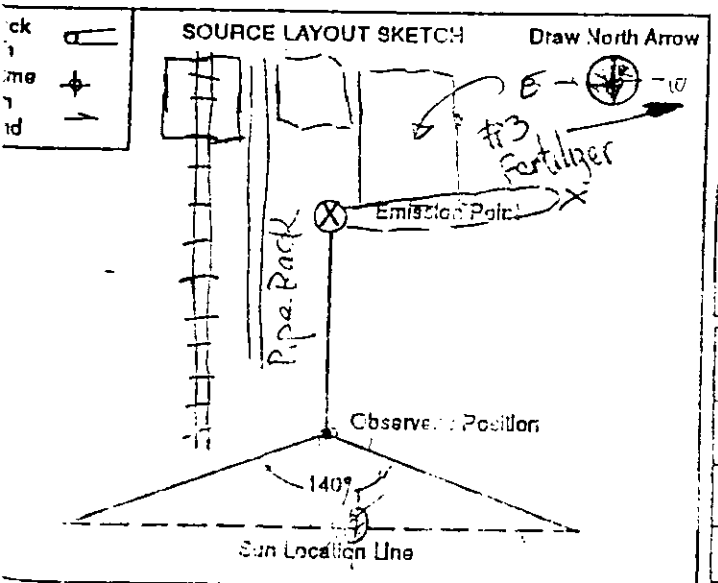


| | |
|---|---|
| OBSERVER'S NAME (PRINT) | Kenneth Gwen |
| OBSERVER'S SIGNATURE | Kenneth Gwen |
| DATE | 6/9/97 |
| CERTIFIED BY E.P.A. | |
| DATE | 6/26/97 |
| COMMENTS | |

I CERTIFY THE ABOVE PROCESS AND DATA IS TRUE TO THE BEST OF MY KNOWLEDGE.

SIGNATURE

DATE

## PROCESS OPERATIONAL DATA

**Cargill Fertilizer, Inc Bartow, FL**
Test for: Fluoride & Particulate
Test Date: 06/09/97
Soucr ID: #3 Fertilizer Plant (#3DAP)
Test conducted by: Stevenson and Associates

Time Sampled: 9:00 - 14:00

Test Type: OMPLIANCE

# #3 FERTILIZER PLANT (#3DAP)

| PARAMETERS | units | 09:00 | 10:00 | 11:00 | 12:00 | 13:00 | 14:00 | Average |
|---|---|---|---|---|---|---|---|---|
| **Ammonia Feed Rate** | | | | | | | | |
| to Reactor | GPM | 59 | 60 | 62 | 62 | 63 | 62 | 61.33333 |
| to Granulator 50 % | GPM | 35.5 | 36.2 | 35.5 | 35.5 | 36.2 | 36 | 35.81667 |
| **50% Acid Feed Rate** | | | | | | | | |
| to Reactor | GPM | 90 | 85 | 89 | 88 | 85 | 88 | 87.5 |
| to Recovery Sol'n sump | GPM | 65 | 66 | 69 | 70 | 66 | 60 | 66 |
| **30% Acid Feed Rate** | | | | | | | | |
| to Recovery Sol'n sump | GPM | 120 | 122 | 120 | 122 | 125 | 129 | 123 |
| **Recovery Sol'n Scrubber Flow** | | | | | | | | |
| Dryer venturi | GPM | 690 | 640 | 640 | 635 | 640 | 640 | 647.5 |
| Dryer cyclonic | GPM | 651 | 670 | 680 | 672 | 675 | 682 | 671.6667 |
| Cooler venturi | GPM | 580 | 570 | 580 | 579 | 575 | 580 | 577.3333 |
| Cooler cyclonic | GPM | 655 | 656 | 660 | 652 | 660 | 658 | 657.1667 |
| Reactor/granulator venturi | GPM | 670 | 670 | 671 | 670 | 672 | 680 | 672.1667 |
| Reactor/granulator cyclonic | GPM | 735 | 730 | 733 | 729 | 731 | 728 | 731 |
| **Pond Water scrubber Flow** | | | | | | | | |
| Dryer Ejector | GPM | 381 | 388 | 382 | 380 | 383 | 382 | 382.5 |
| Tailgas scrubber | GPM | 3929 | 3920 | 3930 | 3910 | 3912 | 3922 | 3920.5 |
| **Delta P's (pressure change)** | | | | | | | | |
| Reactor/Granulator RS scrubber | "H2O | 14 | 14 | 14 | 14 | 14 | 14 | 14 |
| Dryer Recovery Sol'n scrubber | "H2O | 19.5 | 19.8 | 19.4 | 19.4 | 19.4 | 19.2 | 19.45 |
| Cooler Recovery Sol'n scrubber | "H2O | 20 | 20 | 20 | 20 | 20 | 20 | 20 |
| Tailgas scrubber | "H2O | 1 | 1 | 1 | 1 | 1 | 1 | 1 |
| Main Scrubber Fan Amps | amps | 280 | 275 | 280 | 280 | 281 | 280 | 279.3333 |
| mole ratio--reactor | | 1.51 | 1.43 | 1.49 | 1.45 | 1.48 | 1.49 | 1.475 |
| mole ratio--recovery soln | | 0.52 | 0.65 | 0.75 | 0.72 | 0.83 | 0.88 | 0.725 |
| MAP/DAP Production Rate | TPH | | | | | | | 71.5 |

Operator:

Supervisor:

# TABLE 1. PARTICULATE & FLUORIDE EMISSIONS TEST SUMMARY

**Company: CARGILL BARTOW**
**Source: DAP No. 3**

50.23 P2O5

| | Run 1 | Run 2 | Run 3 |
|---|---|---|---|
| Date of Run | 09/11/97 | 09/11/97 | 09/11/97 |
| Process Rate (TPH) | 104.6 | 104.6 | 104.6 |
| Start Time (24-hr. clock) | 0933 | 1120 | 1251 |
| End Time (24-hr. clock) | 1035 | 1222 | 1353 |
| Vol. Dry Gas Sampled Meter Cond. (DCF) | 46.100 | 49.210 | 45.519 |
| Gas Meter Calibration Factor | 1.015 | 1.015 | 1.015 |
| Barometric Pressure at Barom. (in. Hg.) | 29.91 | 29.93 | 29.93 |
| Elev. Diff. Manom. to Barom. (ft.) | 0 | 0 | 0 |
| Vol. Gas Sampled Std. Cond. (DSCF) | 45.221 | 47.769 | 43.697 |
| Vol. Liquid Collected Std. Cond. (SCF) | 10.448 | 10.203 | 10.929 |
| Moisture in Stack Gas (% Vol.) | 18.8 | 17.6 | 20.0 |
| Molecular Weight Dry Stack Gas | 29.00 | 29.00 | 29.00 |
| Molecular Weight Wet Stack Gas | 26.94 | 27.06 | 26.80 |
| Stack Gas Static Press. (in. H2O gauge) | -0.47 | -0.48 | -0.45 |
| Stack Gas Static Press. (in. Hg. abs.) | 29.88 | 29.89 | 29.90 |
| Average Square Root Velocity Head | 0.868 | 0.900 | 0.826 |
| Average Orifice Differential (in. H2O) | 1.995 | 2.197 | 1.885 |
| Average Gas Meter Temperature (°F) | 88.8 | 95.3 | 101.0 |
| Average Stack Gas Temperature (°F) | 160.0 | 165.3 | 162.5 |
| Pitot Tube Coefficient | 0.84 | 0.84 | 0.84 |
| Stack Gas Vel. Stack Cond. (ft./sec.) | 54.70 | 56.81 | 52.29 |
| Effective Stack Area (sq. ft.) | 44.18 | 44.18 | 44.18 |
| Stack Gas Flow Rate Std. Cond. (DSCFM) | 100,150 | 104,682 | 93,984 |
| Stack Gas Flow Rate Stack Cond. (ACFM) | 144,989 | 150,578 | 138,617 |
| Net Time of Run (min.) | 60 | 60 | 60 |
| Nozzle Diameter (in.) | 0.250 | 0.250 | 0.250 |
| Percent Isokinetic | 97.6 | 98.6 | 100.5 |
| Particulate Collected (mg.) | 26.4 | 8.2 | 13.3 |
| Particulate Emissions (grains/DSCF) | 0.009 | 0.003 | 0.005 |
| **Particulate Emissions (lb./hr.)** | **7.7** | **2.4** | **3.8** |
| **Avg. Particulate Emissions (lb./hr.)** | | **4.6** | |
| **Allowable Part. Emissions (lb./hr.)** | | **30.0** | |
| **Fluoride Emissions (lb./hr.)** | **1.87** | **1.40** | **1.85** |
| **Fluoride Emissions (lb./T P2O5)** | **0.018** | **0.013** | **0.018** |
| **Avg. Fluoride Emissions (lb./hr.)** | | **1.71** | |
| **Allowable Fluoride Emissions (lb./hr.)** | | **1.9** | |
| **Avg. Fluoride Emissions (lb./T P2O5)** | | **0.016** | |
| **Allowable Fluoride Emissions (lb./T P2O5)** | | **0.06** | |

Note: Standard conditions 68°F, 29.92 in. Hg

# SOUTHERN ENVIRONMENTAL SCIENCES, INC.

1204 North Wheeler Street, Plant City, Florida 33566 (813)752-5014

## VISIBLE EMISSIONS EVALUATION

COMPANY: Cargill Fertilizer - Bartow

UNIT: DAP #3

ADDRESS: 3200 Hwy 60 WEST, Bartow, FL

| | |
|---|---|
| PERMIT NO. A053-169781 | COMPLIANCE? YES ☐ NO ☐ |
| AIRS NO. — | EU NO. — |
| PROCESS RATE 104.6 TPH | PERMITTED RATE NA |
| PROCESS EQUIPMENT DAP plant | |
| CONTROL EQUIPMENT Tail gas Scrubber | |
| OPERATING MODE Normal | AMBIENT TEMP. (°F) START 95° STOP ✓ |
| HEIGHT ABOVE GROUND LEVEL START ~125' STOP ✓ | HEIGHT REL. TO OBSERVER START ~125' STOP ✓ |
| DISTANCE FROM OBSERVER START ~400' STOP ✓ | DIRECTION FROM OBSERVER START 272° STOP ✓ |
| EMISSION COLOR White | PLUME TYPE CONTIN. ☐ INTERMITTENT ☒ |
| WATER DROPLETS PRESENT NO ☐ YES ☒ | IS WATER DROPLET PLUME ATTACHED ☒ DETACHED ☐ |

POINT IN THE PLUME AT WHICH OPACITY WAS DETERMINED
START Dissipation of Steam STOP ✓

DESCRIBE BACKGROUND
START Sky STOP ✓

| | |
|---|---|
| BACKGROUND COLOR START Blue STOP ✓ | SKY CONDITIONS START Clear STOP |
| WIND SPEED (MPH) START STOP | WIND DIRECTION START STOP |
| AVERAGE OPACITY FOR HIGHEST PERIOD | RANGE OF OPAC. READINGS MIN. MAX. |

SOURCE LAYOUT SKETCH — DRAW NORTH ARROW

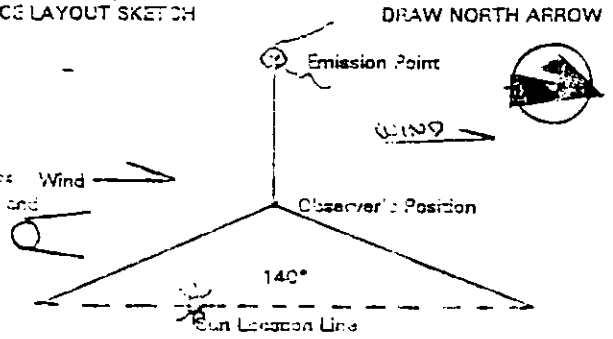


COMMENTS

| OBSERVATION DATE | START TIME | STOP TIME |
|---|---|---|
| 9/11/97 | 1120 | 1220 |

| SEC MIN | 0 | 15 | 30 | 45 | SEC MIN | 0 | 15 | 30 | 45 |
|---|---|---|---|---|---|---|---|---|---|
| 0 | 0 | 0 | 0 | 0 | 30 | 5 | 5 | 5 | 5 |
| 1 | 0 | 0 | 0 | 0 | 31 | 5 | 5 | 5 | 5 |
| 2 | 5 | 0 | 0 | 5 | 32 | 5 | 5 | 5 | 5 |
| 3 | 5 | 5 | 5 | 5 | 33 | 5 | 5 | 5 | 5 |
| 4 | 0 | 5 | 5 | 5 | 34 | 5 | 5 | 5 | 5 |
| 5 | 0 | 5 | 0 | 5 | 35 | 5 | 5 | 5 | 5 |
| 6 | 5 | 5 | 0 | 5 | 36 | 5 | 5 | 5 | 5 |
| 7 | 5 | 5 | 5 | 5 | 37 | 5 | 5 | 5 | 5 |
| 8 | 5 | 5 | 5 | 5 | 38 | 5 | 5 | 5 | 5 |
| 9 | 5 | 5 | 5 | 5 | 39 | 5 | 5 | 5 | 5 |
| 10 | 5 | 5 | 5 | 0 | 40 | 5 | 5 | 5 | 5 |
| 11 | 5 | 5 | 5 | 0 | 41 | 5 | 5 | 5 | 5 |
| 12 | 0 | 5 | 5 | 5 | 42 | 5 | 5 | 5 | 5 |
| 13 | 5 | 5 | 5 | 5 | 43 | 5 | 5 | 5 | 5 |
| 14 | 5 | 5 | 5 | 5 | 44 | 5 | 5 | 5 | 5 |
| 15 | 5 | 5 | 5 | 5 | 45 | 5 | 5 | 5 | 5 |
| 16 | 0 | 5 | 5 | 5 | 46 | 5 | 5 | 5 | 5 |
| 17 | 5 | 5 | 5 | 5 | 47 | 5 | 5 | 5 | 5 |
| 18 | 5 | 0 | 5 | 5 | 48 | 5 | 5 | 5 | 5 |
| 19 | *5 | 5 | 5 | 5 | 49 | 5 | 5 | 5 | 5 |
| 20 | 5 | 5 | 5 | 5 | 50 | 5 | 5 | 5 | 5 |
| 21 | 5 | 5 | 5 | 5 | 51 | 5 | 5 | 5 | 5 |
| 22 | 5 | 5 | 5 | 5 | 52 | 5 | 5 | 5 | 5 |
| 23 | 5 | 5 | 5 | 5 | 53 | 5 | 5 | 5 | 5 |
| 24 | 5 | 5 | 5 | 5* | 54 | 5 | 5 | 5 | 5 |
| 25 | 5 | 5 | 5 | 5 | 55 | 5 | 5 | 5 | 5 |
| 26 | 5 | 5 | 5 | 5 | 56 | 5 | 5 | 5 | 5 |
| 27 | 5 | 5 | 5 | 5 | 57 | 5 | 5 | 5 | 5 |
| 28 | 5 | 5 | 5 | 5 | 58 | 5 | 5 | 5 | 5 |
| 29 | 5 | 5 | 5 | 5 | 59 | 5 | 5 | 5 | 5 |

Observer: Ken Roberts

Certified by: FDEP Certified at: Tampa

Date Certified: 2/97 Exp. Date: 2/98

I certify that all data provided to the person conducting the test was true and correct to the best of my knowledge:

Signature: See Process

Title: Operational Data

PROCESS OPERATIONAL DATA

**Cargill Fertilizer, Inc Bartow, FL**
Test for: Fluoride & Particulate
Test Date: 09/11/97
Source ID: #3 Fertilizer Plant (#3DAP)
Test conducted by: Southern and Associates

Time Sampled:

Test Type: Compliance

# #3 FERTILIZER PLANT (#3DAP)

| PARAMETERS | units | 9:30 AM | 10:30 AM | 11:30 AM | 12:30 PM | 1:30 PM | 02:00 | Average |
|---|---|---|---|---|---|---|---|---|
| **Ammonia Feed Rate** | | | | | | | | |
| to Reactor | GPM | 78 | 78 | 85 | 84 | 89 | 87 | 83.50 |
| to Granulator 50 % | GPM | 0 | 0 | 0 | 0 | 0 | 0 | 0 |
| **50% Acid Feed Rate** | | | | | | | | |
| to Reactor | GPM | 167 | 175 | 204 | 195 | 196 | 194 | 188.50 |
| to Recovery Sol'n sump | GPM | N/A | N/A | N/A | N/A | N/A | N/A | 0 |
| **50% Acid Feed Rate** | | | | | | | | |
| to Recovery Sol'n sump | GPM | 110 | 145 | 123 | 121 | 111 | 112 | 120.33 |
| **Recovery Sol'n Scrubber Flow** | | | | | | | | |
| Dryer venturi | GPM | 826 | 863 | 711 | 867 | 876 | 765 | 818 |
| Dryer cyclonic | GPM | 438 | 440 | 412 | 444 | 453 | 439 | 437.5667 |
| Cooler venturi | GPM | 732 | 785 | 705 | 781 | 792 | 745 | 756.67 |
| Cooler cyclonic | GPM | 509 | 514 | 487 | 517 | 525 | 512 | 510.67 |
| Reactor/granulator venturi | GPM | 563 | 587 | 524 | 604 | 610 | 602 | 581.6667 |
| Reactor/granulator cyclonic | GPM | 484 | 495 | 479 | 506 | 508 | 499 | 495.1667 |
| **Pond Water scrubber Flow** | | | | | | | | |
| Dryer Ejector | GPM | 134 | 133 | 151 | 152 | 153 | 145 | 144.67 |
| Tailgas scrubber | GPM | 2874 | 2661 | 2935 | 2930 | 2941 | 2930 | 2878.50 |
| **Delta P's (pressure change)** | | | | | | | | |
| Reactor/Granulator RS scrubber | "H2O | 13.56 | 13.43 | 11.62 | 13.67 | 14.04 | 13 | 13.22 |
| Dryer Recovery Sol'n scrubber | "H2O | 21 | 20.2 | 20.17 | 20.05 | 20.13 | 19.5 | 20.18 |
| Cooler Recovery Sol'n scrubber | "H2O | 19.6 | 19.32 | 19.43 | 19.6 | 19.59 | 19.2 | 19.45667 |
| Tailgas scrubber | "H2O | 3 | 3 | 3 | 3 | 2 | 3 | 2.83 |
| **Main Scrubber Fan Amps** | amps | 299 | 303 | 297 | 297 | 301 | 302 | 299.33 |
| **mole ratio--reactor** | | 1.47 | 1.48 | 1.49 | 1.5 | 1.48 | 1.51 | 1.49 |
| **mole ratio--recovery soln** | | 0.76 | 0.7 | 0.64 | 0.74 | 0.67 | 0.7 | 0.70 |
| **MAP/DAP Production Rate** | TPH | | | | | | | 104.5 |
| **P205 EQUIVALENT** | TPH | | | | | | | 50.23 |

Operator: [signature]

## SUMMARY OF TEST DATA

PLANT : CARGILL UNIT : #3 DAP RUN NUMBERS :1, 2, 3

TEST DATE : 5/7/98

| | #1 | #2 | #3 | |
|---|---|---|---|---|
| DATE | 5/7/98 | 5/7/98 | 5/7/98 | |
| START TIME | 13:00 | 14:14 | 15:28 | |
| END TIME | 14:01 | 15:16 | 16:29 | |
| STACK DIAMETER (INCHES) | 90 | 90 | 90 | |
| NOZZLE DIAMETER (INCHES) | 0.210 | 0.210 | 0.210 | |
| TEST TIME (MINUTES) | 60 | 60 | 60 | |
| NUMBER OF TEST POINTS PER RUN | 12 | 12 | 12 | |
| STACK GAS TEMPERATURE (°F) | 173.7 | 177.0 | 177.0 | |
| STACK GAS MOISTURE (%) | 20.43 | 19.83 | 19.89 | |
| STACK GAS MOLECULAR WEIGHT | 27.55 | 27.62 | 27.61 | |
| STACK GAS VOLUME SAMPLED (CUBIC FEET) | 36.245 | 35.825 | 36.480 | |
| VOLUME SAMPLED (SCF @ 68°F) | 33.026 | 32.370 | 32.819 | |
| STACK GAS VELOCITY (FEET PER SECOND) | 52.39 | 51.75 | 51.3 | 51.82 |
| STACK GAS FLOW RATE (ACFM) | 138860.2 | 137167.7 | 136017.6 | 137348.5 |
| STACK GAS FLOW RATE (DSCFM @ 68°F) | 92523.5 | 91584.9 | 90765.9 | 91624.8 |
| PARTICULATE COLLECTED (GMS) | 0.0093 | 0.0101 | 0.0109 | |
| PARTICULATE CONC (GRAINS/DSCF) | 0.0043 | 0.0048 | 0.0051 | 0.0048 |
| PARTICULATE MASS RATE (LBS/HOUR) | 3.4452 | 3.7788 | 3.9863 | 3.7368 |
| FLUORIDE COLLECTED (MGMS) | 2.7970 | 3.5680 | 3.9525 | |
| FLUORIDE CONC (GRAINS/DSCF) | 0.0013 | 0.0017 | 0.0019 | 0.0016 |
| FLUORIDE MASS RATE (LBS/HOUR) | 1.0362 | 1.3349 | 1.4435 | 1.2722 |
| ISOKINETIC SAMPLING RATE, %I | 109.29 | 108.22 | 110.71 | |

FIELD DATA AND SAMPLES UNDER THE CONTROL OF: TIM CAPELLE

LABORATORY ANALYSIS UNDER THE CONTROL OF: KEN GIVEN

# STEVENSON AND ASSOCIATES

(813) 651-0878

| | |
|---|---|
| FACILITY NAME: CARGILL | PERMIT NUMBER: A003-169781 |
| SOURCE: #3 DAP | NEDS NO.: 0046 / I.D. NO.: 001 |
| ADDRESS: 3200 State Rd. 60 West | |
| CITY: BARTOW | COUNTY: POLK / ZIP: 33830 |
| CONTACT: David Blanc | PHONE: (941) 533-2171 |
| PROCESS EQUIPMENT: DAP Plant | OPERATING RATE: |
| CONTROL EQUIPMENT: Wet Scrubber | OPERATING MODE: 100 % |
| FUEL TYPE/RATE: Nat. Gas | MATERIAL TYPE/RATE: DAP |
| DESCRIBE EMISSION POINT: START Stack Exit | STOP same |
| HEIGHT ABOVE GROUND LEVEL: START 100' STOP 100' | HEIGHT RELATIVE TO OBSERVER: START 95' STOP 95' |
| DISTANCE FROM OBSERVER: START 600' STOP 600' | DIRECTION FROM OBSERVER: START E STOP E |
| DESCRIBE EMISSIONS: START None | STOP |
| EMISSION COLOR: START N/A STOP | PLUME TYPE: CONTINUOUS ☒ INTERMITTENT ☐ |
| WATER DROPLETS PRESENT: NO ☐ YES ☒ | WATER DROPLET PLUME: ATTACHED ☒ DETACHED ☐ |
| POINT IN THE PLUME AT WHICH OPACITY WAS DETERMINED: START tip of plume STOP same | |
| DESCRIBE BACKGROUND: START cloud STOP | AMBIENT TEMP: START 80° STOP 80° |
| BACKGROUND COLOR: START white STOP | SKY CONDITIONS: START scattered STOP ✓ |
| WIND SPEED: START 5-10 STOP | WIND DIRECTION: START SSW STOP SSW |

| OBSERVATION DATE | START TIME | STOP TIME |
|---|---|---|
| 5/7/98 | 2115 | 3115 |

| MIN \ SEC | 0 | 15 | 30 | 45 | MIN \ SEC | 0 | 15 | 30 | 45 |
|---|---|---|---|---|---|---|---|---|---|
| 1 | 0 | 0 | 0 | 0 | 31 | 0 | 0 | 0 | 0 |
| 2 | 0 | 0 | 0 | 0 | 32 | 0 | 0 | 0 | 0 |
| 3 | 0 | 0 | 0 | 0 | 33 | 0 | 0 | 0 | 0 |
| 4 | 0 | 0 | 0 | 0 | 34 | 0 | 0 | 0 | 0 |
| 5 | 0 | 0 | 0 | 0 | 35 | 0 | 0 | 0 | 0 |
| 6 | 0 | 0 | 0 | 0 | 36 | 0 | 0 | 0 | 0 |
| 7 | 0 | 0 | 0 | 0 | 37 | 0 | 0 | 0 | 0 |
| 8 | 0 | 0 | 0 | 0 | 38 | 0 | 0 | 0 | 0 |
| 9 | 0 | 0 | 0 | 0 | 39 | 0 | 0 | 0 | 0 |
| 10 | 0 | 0 | 0 | 0 | 40 | 0 | 0 | 0 | 0 |
| 11 | 0 | 0 | 0 | 0 | 41 | 0 | 0 | 0 | 0 |
| 12 | 0 | 0 | 0 | 0 | 42 | 0 | 0 | 0 | 0 |
| 13 | 0 | 0 | 0 | 0 | 43 | 0 | 0 | 0 | 0 |
| 14 | 0 | 0 | 0 | 0 | 44 | 0 | 0 | 0 | 0 |
| 15 | 0 | 0 | 0 | 0 | 45 | 0 | 0 | 0 | 0 |
| 16 | 0 | 0 | 0 | 0 | 46 | 0 | 0 | 0 | 0 |
| 17 | 0 | 0 | 0 | 0 | 47 | 0 | 0 | 0 | 0 |
| 18 | 0 | 0 | 0 | 0 | 48 | 0 | 0 | 0 | 0 |
| 19 | 0 | 0 | 0 | 0 | 49 | 0 | 0 | 0 | 0 |
| 20 | 0 | 0 | 0 | 0 | 50 | 0 | 0 | 0 | 0 |
| 21 | 0 | 0 | 0 | 0 | 51 | 0 | 0 | 0 | 0 |
| 22 | 0 | 0 | 0 | 0 | 52 | 0 | 0 | 0 | 0 |
| 23 | 0 | 0 | 0 | 0 | 53 | 0 | 0 | 0 | 0 |
| 24 | 0 | 0 | 0 | 0 | 54 | 0 | 0 | 0 | 0 |
| 25 | 0 | 0 | 0 | 0 | 55 | 0 | 0 | 0 | 0 |
| 26 | 0 | 0 | 0 | 0 | 56 | 0 | 0 | 0 | 0 |
| 27 | 0 | 0 | 0 | 0 | 57 | 0 | 0 | 0 | 0 |
| 28 | 0 | 0 | 0 | 0 | 58 | 0 | 0 | 0 | 0 |
| 29 | 0 | 0 | 0 | 0 | 59 | 0 | 0 | 0 | 0 |
| 30 | 0 | 0 | 0 | 0 | 60 | 0 | 0 | 0 | 0 |

| | |
|---|---|
| AVERAGE OPACITY FOR HIGHEST 24 CONSECUTIVE READINGS: 0 | RANGE OF OPACITY READINGS: MIN. 0 MAX. 0 |

SOURCE LAYOUT SKETCH

Draw North Arrow

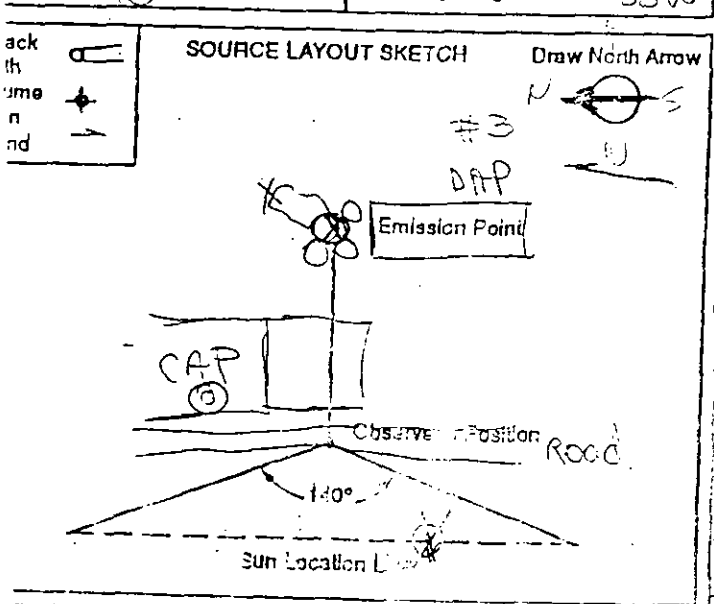


| | |
|---|---|
| OBSERVER'S NAME (PRINT): Kenneth Given | |
| OBSERVER'S SIGNATURE: Kenneth Given | DATE: 5/7/98 |
| CERTIFIED BY E.T.A. | DATE: 2/98 |
| COMMENTS: Plume length or distance visual from light to hazy length of plume. Background white & blue | |

IF THE ABOVE PROCESS RATE DATA IS TRUE TO THE BEST OF MY KNOWLEDGE, ATTEST:

DATE

PROCESS OPERATIONAL DATA

Cargill Fertilizer, Inc Bartow, FL
Test for: Fluoride & Particulate
Test Date: 5-07-98
Source ID: #3 Fertilizer Plant (#3DAP)
Test conducted by: Stevenson and Associates

Time Sampled: 1:00-4:30

Test Type: Compliance

# #3 FERTILIZER PLANT (#3DAP)

| PARAMETERS | units | 01:00 | 01:30 | 02:00 | 02:30 | 03:00 | 03:30 | 04:00 | 04:30 | Average |
|---|---|---|---|---|---|---|---|---|---|---|
| **Ammonia Feed Rate** | | | | | | | | | | |
| to Reactor D3FIC100 | GPM | 81 | 80 | 80 | 80 | 80 | 81 | 79 | 80 | 80.125 |
| to Granulator 50 % D3FIC208A | GPM | 64 | 64 | 63 | 63 | 64 | 63 | 63 | 64 | 63.5 |
| **50% Acid Feed Rate** | | | | | | | | | | |
| to Reactor D3FIC100B | GPM | 110 | 110 | 109 | 109 | 110 | 110 | 109 | 110 | 109.625 |
| to Recovery Sol'n sump D3FIC621B | GPM | 120 | 122 | 121 | 121 | 122 | 123 | 124 | 122 | 121.875 |
| **30% Acid Feed Rate** | | | | | | | | | | |
| to Recovery Sol'n sump D3FIC620A | GPM | 140 | 140 | 139 | 140 | 140 | 140 | 139 | 141 | 139.875 |
| **Recovery Sol'n Scrubber Flow** | | | | | | | | | | |
| Dryer venturi D3FI601A | GPM | 399 | 517 | 513 | 510 | 517 | 484 | 490 | 496 | 490.75 |
| Dryer cyclonic D3FI601B | GPM | 366 | 477 | 533 | 541 | 563 | 613 | 622 | 629 | 543 |
| Cooler venturi D3FI602A | GPM | 547 | 595 | 619 | 617 | 618 | 567 | 586 | 590 | 592.375 |
| Cooler cyclonicD3FI602B | GPM | 352 | 473 | 526 | 516 | 545 | 600 | 604 | 616 | 528 |
| Reactor/granulator venturi D3FI603A | GPM | 552 | 642 | 664 | 641 | 645 | 619 | 623 | 621 | 625.875 |
| Reactor/granulator cyclonic D3FI603B | GPM | 391 | 520 | 563 | 559 | 588 | 651 | 660 | 664 | 574.375 |
| **Fend Water scrubber Flow** | | | | | | | | | | |
| Dryer Ejector D3FI601A | GPM | 500 | 500 | 500 | 500 | 500 | 500 | 500 | 500 | 500 |
| Tailgas scrubber recirculation | GPM | 3725 | 3699 | 3699 | 3675 | 3671 | 3653 | 3649 | 3660 | 3678.875 |
| Tailgas scrubber D3FI606A | GPM | 100 | 100 | 100 | 21 | 100 | 100 | 23 | 100 | 80.5 |
| **Delta P's (pressure change)** | | | | | | | | | | |
| Reactor/Granulator RS scrubberD3DP603 | "H2O | 13.06 | 14.55 | 15.07 | 15.13 | 15.06 | 14.93 | 15.15 | 14.37 | 14.665 |
| Dryer Recovery Sol'n scrubber D3DP601 | "H2O | 20.84 | 18.95 | 19.05 | 19.12 | 19.49 | 19.42 | 19.24 | 19.39 | 19.43625 |
| Cooler Recovery Sol'n scrubber DEFI602A | "H2O | 16.97 | 18.9 | 18.65 | 18.46 | 18.43 | 18.26 | 18.07 | 18.66 | 18.3 |
| Tailgas scrubberD3DPI606 | "H2O | 4 | 3 | 3 | 3 | 3 | 3 | 3 | 3 | 3.125 |
| Main Scrubber Fan Amps D3IIC607 | amps | 277 | 283 | 274 | 267 | 275 | 270 | 271 | 264 | 270.75 |
| mole ratio--reactor | | 1.45 | 1.47 | 1.47 | 1.46 | 1.47 | 1.46 | 1.47 | 1.46 | 1.46625 |
| mole ratio--recovery soln | | 0.69 | 0.7 | 0.71 | 0.73 | 0.73 | 0.75 | 0.75 | 0.75 | 0.72625 |
| MAP/DAP Production Rate | TPH | | | | | | | | | 98.3 |

Operator:

Supervisor:

Heat input rates during the compliance testing of the No. 3 Fertilizer Plant were as follows:

6/9/97: 5.1 MMBtu/hr
9/11/97: 9.7 MMBtu/hr
5/7/98: 17.2 MMBtu/hr

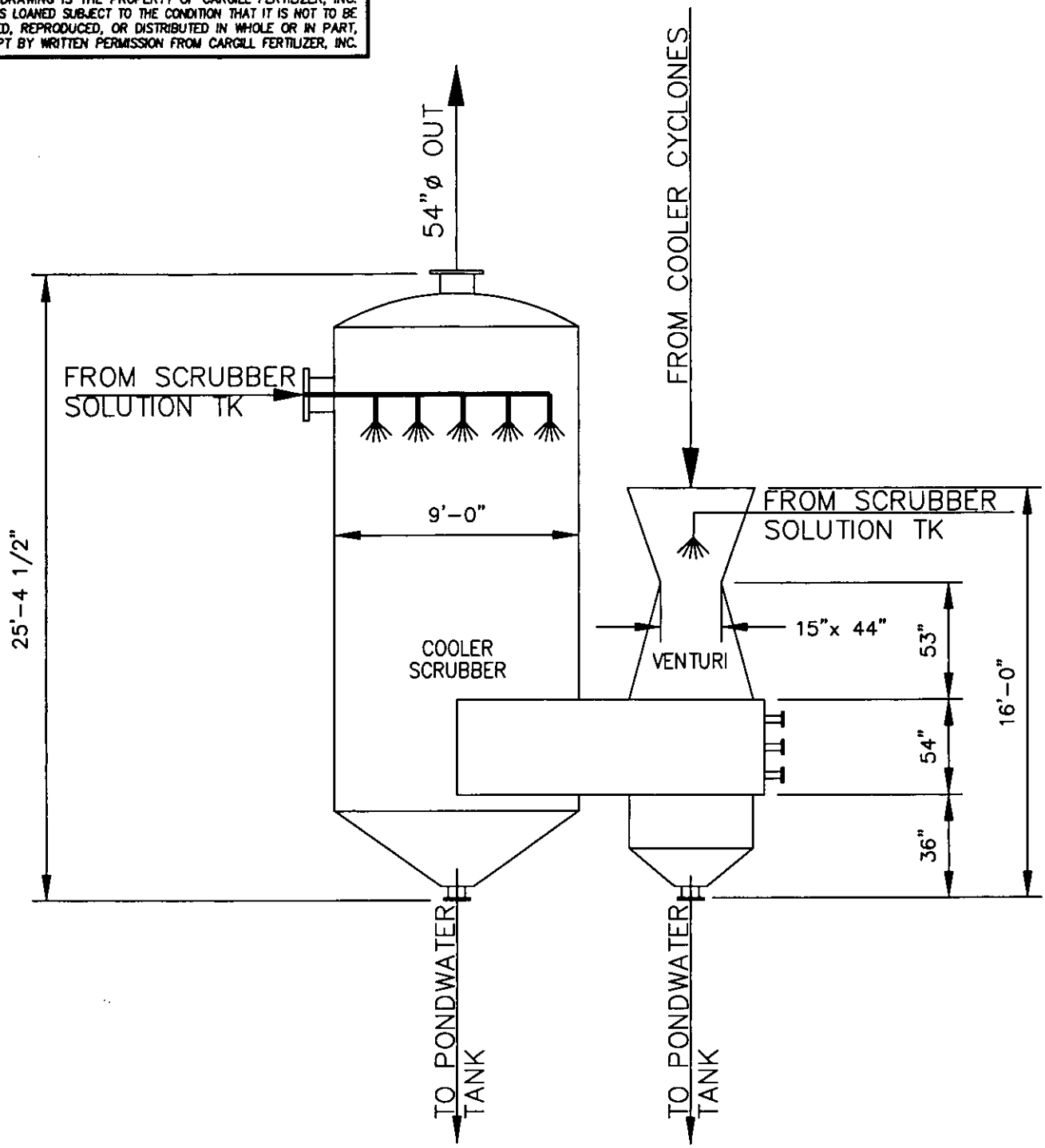


# COOLER SCRUBBER

(WAS RG SCRUBBER)

| REF DRAWINGS | | NO. | DATE | REVISION | BY | CK | APP |
|---|---|---|---|---|---|---|---|

CARGILL FERTILIZER, INC.
3200 HIGHWAY 60 WEST
BARTOW, FLORIDA 33830
(941) 534-9610

CAD FILE: PERMIT1.DWG | PLOT SCALE: 1=1 | JOB NO.

DAPNO.3
EXPANSION-OF-DAP-FACILITIES
COOLER-SCRUBBER

SEC. VESSELS | SCALE NONE | DATE 10-21-98

DR E.MORRIS | DR NO. SKETCH1

CH | DATE

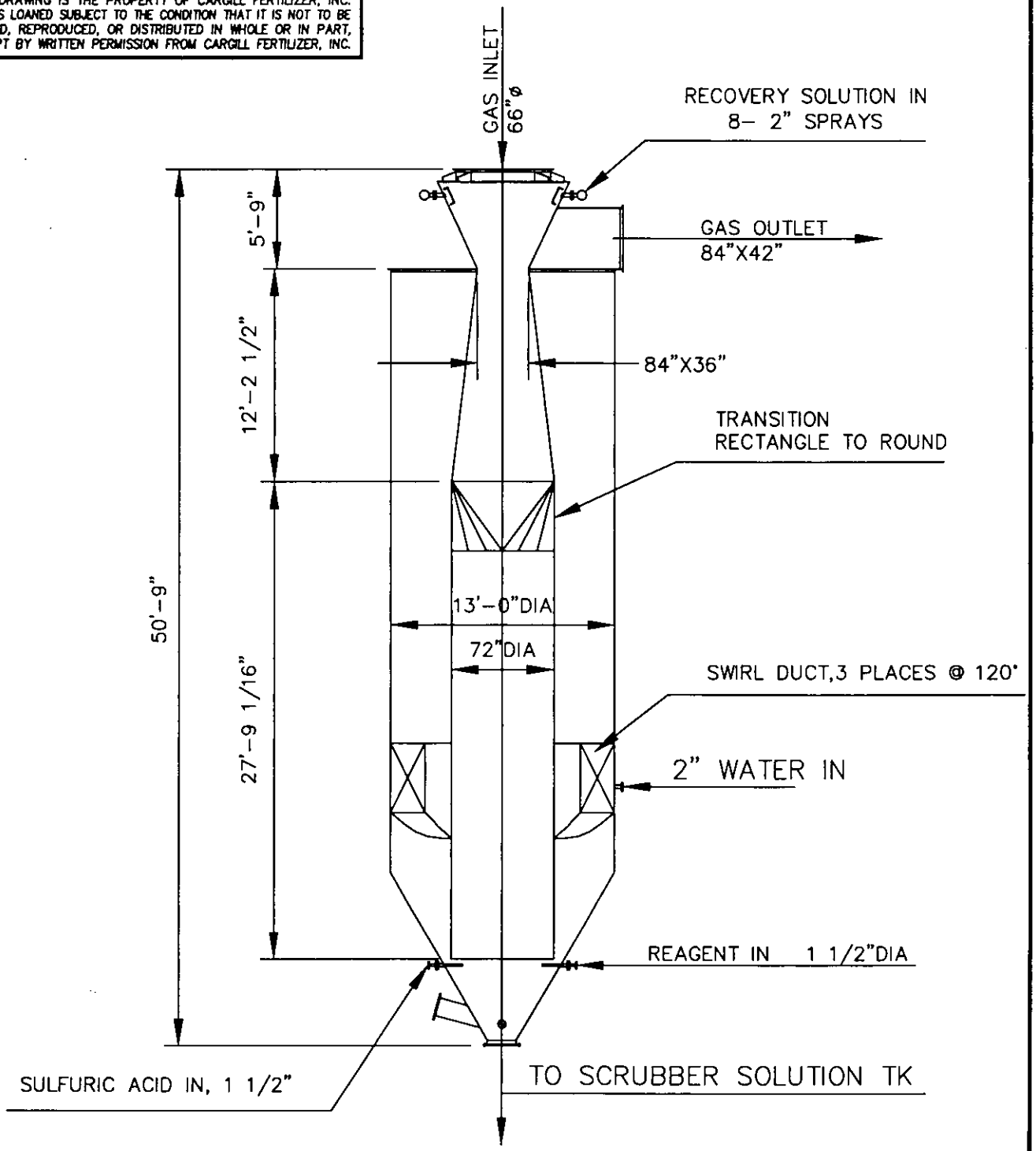


# DRYER SCRUBBER

| REF DRAWINGS | NO. | DATE | REVISION | BY | CK | APP |
|---|---|---|---|---|---|---|

**CARGILL FERTILIZER, INC.**
3200 HIGHWAY 60 WEST
BARTOW, FLORIDA 33830
(941) 534-9610

| CAD FILE: PERMIT2.DWG | PLOT SCALE: 1=1 | JOB NO. |
|---|---|---|

DAPNO.3
EXPANSION–OF–DAP–FACILITIES
DRYER–SCRUBBER

SEC. VESSELS SCALE NONE DATE 10–21–98

DR E.MORRIS
CH DATE
DR NO. SKETCH.2

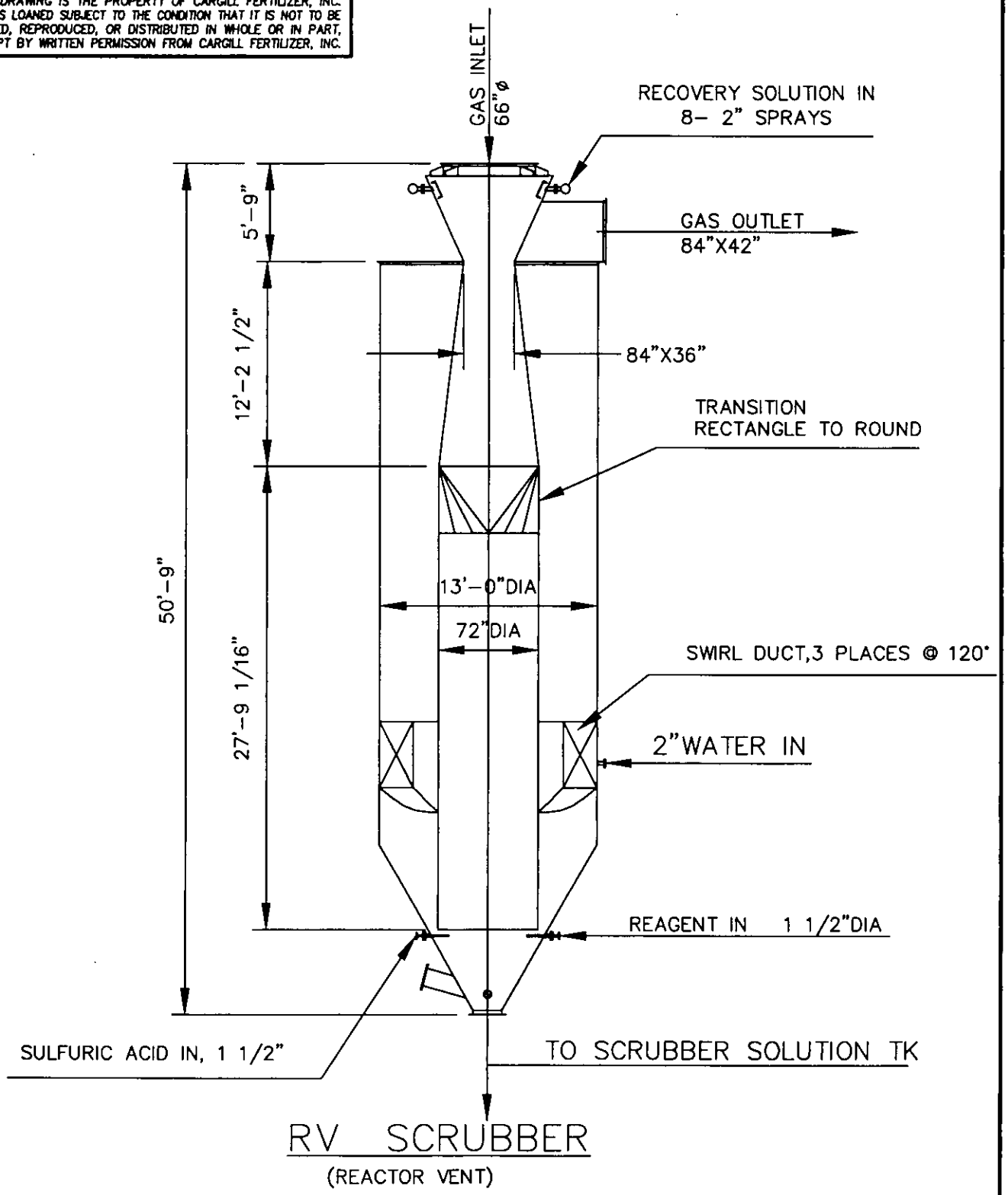


# RV SCRUBBER

(REACTOR VENT)

| REF DRAWINGS | | NO. | DATE | REVISION | BY | CK | APP |
|---|---|---|---|---|---|---|---|

**CARGILL FERTILIZER, INC.**
3200 HIGHWAY 60 WEST
BARTOW, FLORIDA 33830
(941) 534-9610

CAD FILE: PERMIT3.DWG | PLOT SCALE: 1=1 | JOB NO.

DAPNO.3
EXPANSION-OF-DAP-FACILITIES
REACTOR-VENT-SCRUBBER

SEC. VESSELS SCALE NONE DATE 10-21-98

DR E.MORRIS
CH DATE
DR NO. SKETCH3

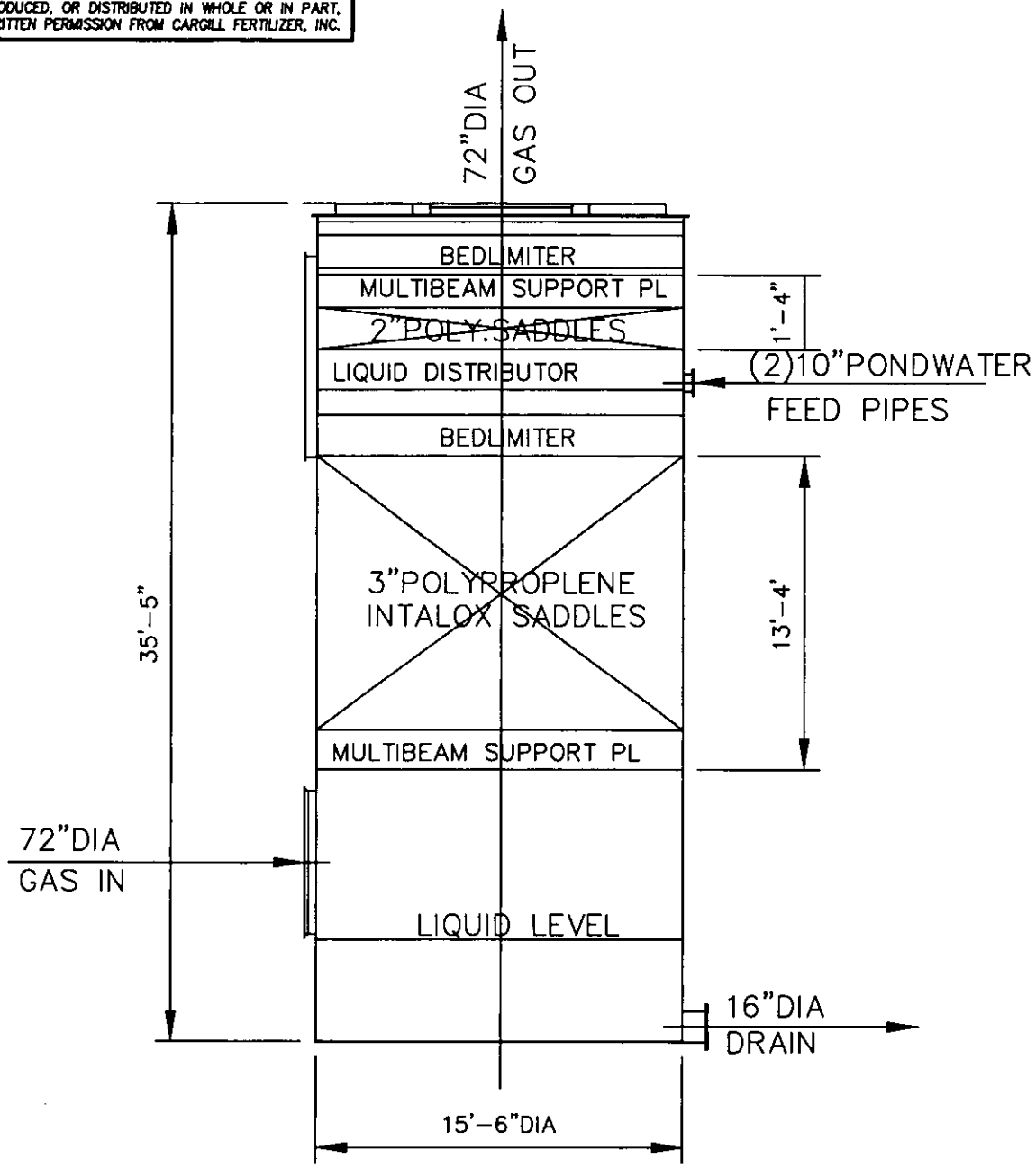


# DRYER TAILGAS SCRUBBER

| REF DRAWINGS | NO. | DATE | REVISION | BY | CK | APP |
|---|---|---|---|---|---|---|

CARGILL FERTILIZER, INC.
3200 HIGHWAY 60 WEST
BARTOW, FLORIDA 33830
(941) 534-9610

CAD FILE: PERMIT4.DWG | PLOT SCALE: 1=1 | JOB NO.

DAPNO.3
EXPANSION-OF-DAP-FACILITIES
DRYER-TAILGAS-SCRUBBER

SEC. VESSELS SCALE NONE DATE 10-21-98

DR E.MORRIS
CH DATE

DR NO. SKETCH4

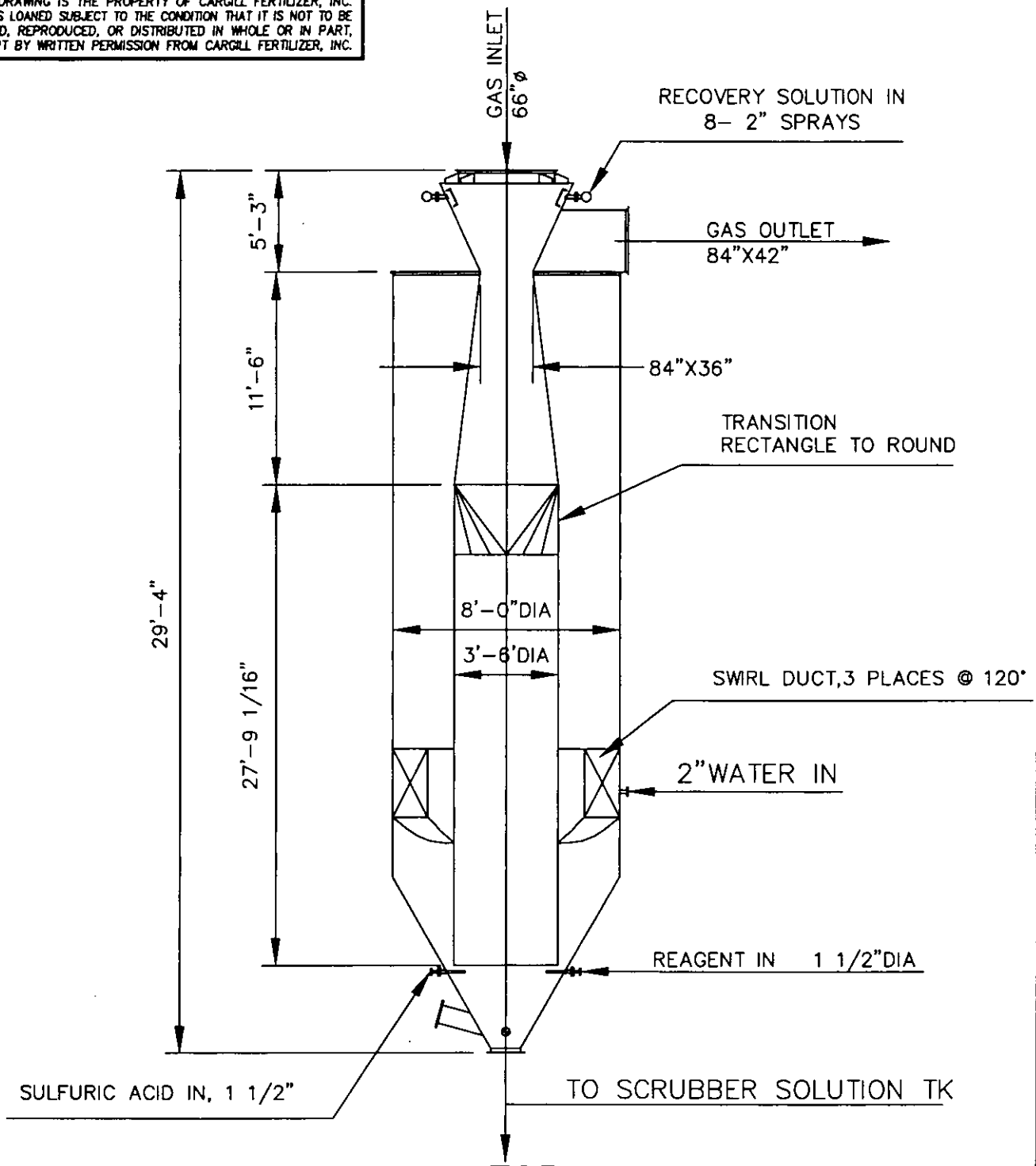


# GRANULATOR SCRUBBER

| REF DRAWINGS | NO. | DATE | REVISION | BY | CK | APP |
|---|---|---|---|---|---|---|

CARGILL FERTILIZER, INC.
3200 HIGHWAY 60 WEST
BARTOW, FLORIDA 33830
(941) 534-9610

CAD FILE: PERMIT5.DWG | PLOT SCALE: 1=1 | JOB NO.

DAPNO.3
EXPANSION-OF-DAP-FACILITIES
GRANULATOR-SCRUBBER

SEC. VESSELS SCALE NONE DATE 10-21-98

DR E.MORRIS DR NO. SKETCH5

CH DATE

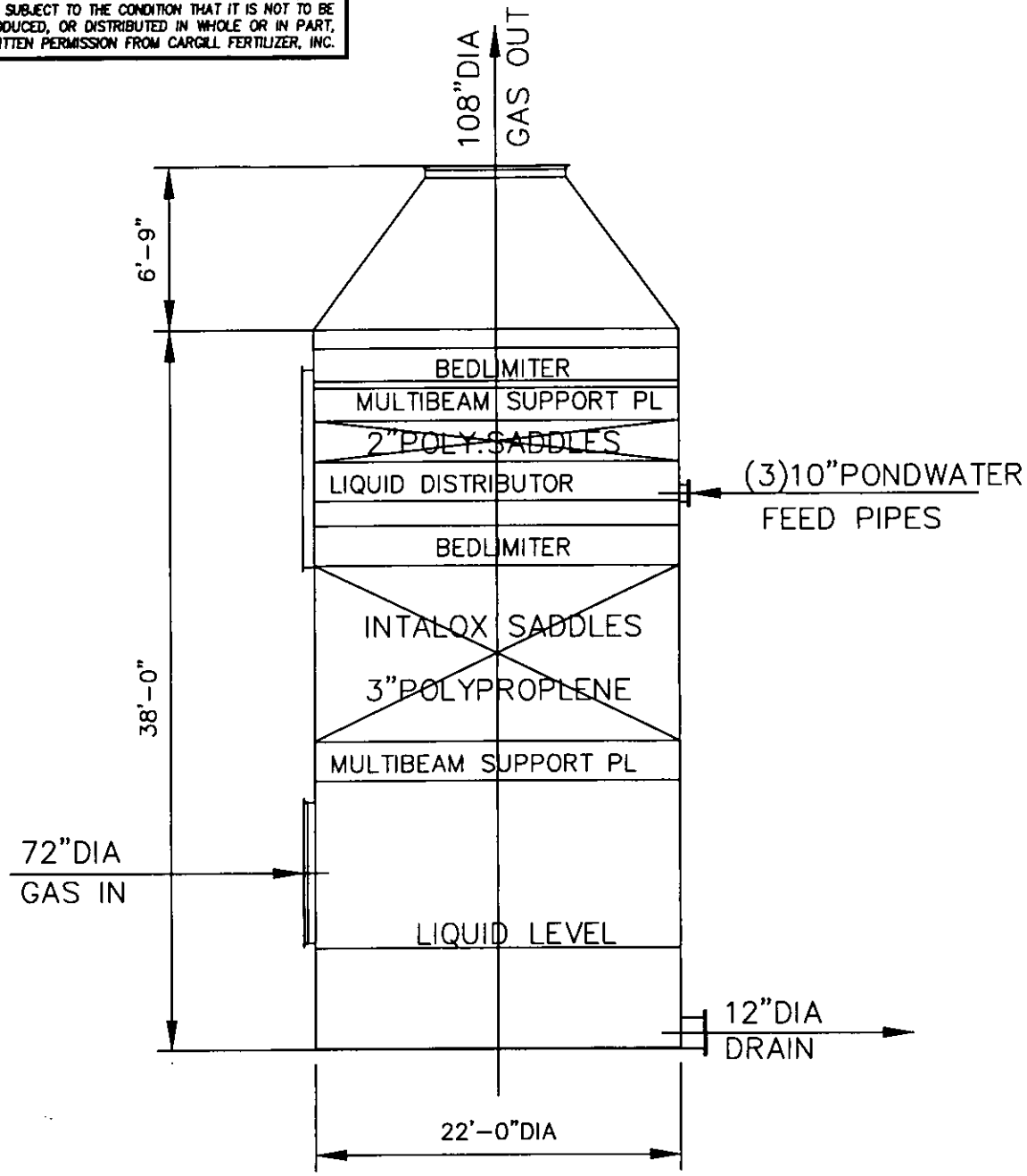


# RGCV TAILGAS SCRUBBER

| REF DRAWINGS | NO. | DATE | REVISION | BY | CK | APP |
|---|---|---|---|---|---|---|

CARGILL FERTILIZER, INC.
3200 HIGHWAY 60 WEST
BARTOW, FLORIDA 33830
(941) 534-9610

CAD FILE: PERMIT6.DWG | PLOT SCALE: 1=1 | JOB NO.

DAPNO.3
EXPANSION-OF-DAP-FACILITIES
RGCV-TAILGAS-SCRUBBER

SEC. VESSELS | SCALE NONE | DATE 10-21-98

DR E.MORRIS | DR NO. SKETCH6

CH | DATE

Table 1. Calculation of Fl Removal Efficiency Versus NTUs for Wet Scrubbing System

| Scrubber | Scrubber Inlet Conditions | | | Number of Transfer Units | Scrubber Outlet Conditions | | | Fluoride Removal Efficiency |
|---|---|---|---|---|---|---|---|---|
| | Air Flow (acfm) | Fluoride Loading (lb/hr) | Fluoride Loading (mg/acf) | | Air Flow (acfm) | Fluoride Loading (lb/hr) | Fluoride Loading (mg/acf) | |
| | | | OPTION 1: POND WATER | | | | | |
| RGCV Tailgas Scrubber | 160,000 | 14.2 | 0.672 | 3.1 | 153,000 | 1.75 | 0.087 | 87.7% |
| Dryer Tailgas Scrubber | 70,500 | 4.6 | 0.494 | 3.0 | 70,100 | 0.75 | 0.081 | 83.7% |
| | TOTAL = | 18.8 | | | | 2.5 | | 86.7% |
| | | | OPTION 2: NEUTRALIZED POND WATER | | | | | |
| RGCV Tailgas Scrubber | 160,000 | 14.2 | 0.672 | 3.1 | 153,000 | 0.71 | 0.035 | 95.0% |
| Dryer Tailgas Scrubber | 70,500 | 4.6 | 0.494 | 3.0 | 70,100 | 0.27 | 0.030 | 94.0% |
| | TOTAL = | 18.8 | | | | 1.0 | | 94.8% |

Notes:

Equilibrium fluoride air concentration due to pond water @ 140 deg. F and 5,500 ppm Fl= 0.060 mg/acf
Equilibrium fluoride air concentration due to pond water @ 140 deg. F and 50 ppm Fl= 0.006 mg/acf

mg/acf = milligrams per actual cubic feet
NTUs = number of transfer units = ln [ (F,in - PW) / (F,out - PW) ]
where, PW = pond water vapor pressure

Table 2. REACTOR/VENTS & DRYER SCRUBBERs (each)

PROPOSED - MEDIUM ENERGY

TOTAL ANNUAL COST SPREADSHEET PROGRAM--HI-ENERGY (VENTURI) SCRUBBERS [1]

COST BASE DATE: June 1988 [2]

| | |
|---|---|
| VAPCCI (Third Quarter 1995): [3] | 115 |

INPUT PARAMETERS

| | | |
|---|---|---|
| -- Inlet stream flowrate (acfm): | | 68,000 |
| -- Inlet stream temperature (oF): | | 165 |
| -- Inlet moisture content (molar, fraction): | | 0.20 |
| -- Inlet absolute humidity (lb/lb b.d.a.): [4] | | 0.155 |
| -- Inlet water flowrate (lb/min): | | 536.5 |
| -- Saturation formula parameters: [5] | | |
| | Slope, B: | 3.335 |
| | Intercept,A: | 9.41E-09 |
| -- Saturation absolute humidity (lb/lb b.d.a.): | | 0.1610 |
| -- Saturation enthalpy temperature term (oF):[6] | | 146.8 |
| -- Saturation temperature (oF): | | 147.6 |
| -- Inlet dust loading (gr/dscf): | | 1.20 |
| -- Overall control efficiency (fractional): | | 0.85 |
| -- Overall penetration (fractional): | | 0.15 |
| -- Mass median particle diameter (microns): [7] | | 1.7 |
| -- 84th % aerodynamic diameter (microns): [7] | | 3.4 |
| -- Particle cut diameter (microns): [7] | | 0.44 |
| -- Scrubber liquid solids content (lb/lb H2O): | | 0.25 |
| -- Liquid/gas (L/G) ratio (gpm/1000 acfm): | | 20.0 |
| -- Material of construction (see list below):[8] | | 1 |

DESIGN PARAMETERS

| | |
|---|---|
| -- Scrubber pressure drop (in. w.c.): | 0.00 |
| -- Inlet air flowrate (dscfm): [9] | 46,131.2 |
| -- Inlet (= outlet) air flowrate (lb/min): | 3,457.8 |
| -- Outlet water flowrate (lb/min): | 556.7 |
| -- Outlet total stream flowrate (acfm): | 66,598.5 |
| -- Scrubber liquid bleed rate (gpm): | 3.227 |
| -- Scrubber evaporation rate (gpm): | 2.42 |
| -- Scrubber liquid makeup rate (gpm): | 5.65 |

CAPITAL COSTS

| | |
|---|---|
| Equipment Costs ($): | |
| -- Scrubber (base) | 75,383 |
| ' (escalated) | 98,603 |
| -- Other (auxiliaries, e.g.) | 0 |
| -- Total | 98,603 |
| Purchased Equipment Cost ($): | 116,352 |
| Total Capital Investment ($): | 222,232 |

ANNUAL COST INPUTS

| | |
|---|---|
| Operating factor (hr/yr): | 8,760 |
| Operating labor rate ($/hr): | 13 |
| Maintenance labor rate ($/hr): | 14.26 |
| Operating labor factor (hr/sh): | 2 |

| | |
|---|---|
| Maintenance labor factor (hr/sh): | 2 |
| Electricity price ($/kWhr): | 0.059 |
| Chemicals price ($/ton): | 0 |
| Process water price ($/1000 gal): | 0.20 |
| Wastewater treatment ($/1000 gal): | 3.80 |
| Overhead rate (fractional): | 0.60 |
| Annual interest rate (fractional): | 0.07 |
| Control system life (years): | 10 |
| Capital recovery factor (system): | 0.1424 |
| Taxes, insurance, admin. factor: | 0.04 |

ANNUAL COSTS

| Item | Cost ($/yr) | Wt. Fact. | W.F.(cond.) |
|---|---|---|---|
| Operating labor | 28,382 | 0.162 | ---- |
| Supervisory labor | 4,257 | 0.024 | ---- |
| Maintenance labor | 23,415 | 0.134 | --- |
| Maintenance materials | 23,415 | 0.134 | --- |
| Electricity | 0 | 0.000 | --- |
| Chemicals | 0 | 0.000 | --- |
| Process water | 593 | 0.003 | --- |
| Wastewater treatment | 6,444 | 0.037 | ---- |
| Overhead | 47,682 | 0.273 | 0.728 |
| Taxes, insurance, administrative | 8,889 | 0.051 | ---- |
| Capital recovery | 31,641 | 0.181 | 0.232 |
| Total Annual Cost ($/yr) | 174,721 | 1.000 | 1.000 |

Notes:

[1] Data used to develop this program were taken from 'Estimating Costs of Air Pollution Control' (CRC Press/Lewis Publishers, 1990).

[2] Base equipment costs reflect this date.

[3] VAPCCI = Vatavuk Air Pollution Control Cost Index (for wet scrubbers) corresponding to year and quarter shown. Base equipment cost, purchased equipment cost, and total capital investment have been escalated to this date via the VAPCCI and control equipment vendor data.

[4] Program calculates from the inlet moisture content.

[5] By assumption, the saturation humidity (hs)-temperature (ts) curve is a power function, of the form: hs = A*(ts)^B.

[6] To obtain the saturation temperature, iterate on the saturation humidity. Continue iterating until the saturation temperature and the saturation enthalpy term are approximately equal.

[7] Both the 'mass median' and '84th percentile aerodynamic' diameters are obtained from a log-normal distribution of the inlet stream particle diameters. The particle cut diameter is a graphical function of the the penetration, the mass median diameter, and the standard deviation of the particle size distribution.

[8] Enter one of the following numbers: carbon steel--'1'; rubber-lined carbon steel--'1.6'; epoxy-coated carbon steel--'1.6'; fiber-reinforced plastic (FRP)--'1.6'.

[9] Measured at 70 oF and 1 atmosphere.

Table 3. GRANULATOR & COOLER SCRUBBER (each)

PROPOSED - MEDIUM ENERGY

TOTAL ANNUAL COST SPREADSHEET PROGRAM--HI-ENERGY (VENTURI) SCRUBBERS [1]

COST BASE DATE: June 1988 [2]

VAPCCI (Third Quarter 1995): [3] 115

INPUT PARAMETERS

| | | |
|---|---|---|
| -- Inlet stream flowrate (acfm): | | 44,000 |
| -- Inlet stream temperature (oF): | | 165 |
| -- Inlet moisture content (molar, fraction): | | 0.20 |
| -- Inlet absolute humidity (lb/lb b.d.a.): [4] | | 0.155 |
| -- Inlet water flowrate (lb/min): | | 347.2 |
| -- Saturation formula parameters: [5] | | |
| | Slope, B: | 3.335 |
| | Intercept,A: | 9.41E-09 |
| -- Saturation absolute humidity (lb/lb b.d.a.): | | 0.1610 |
| -- Saturation enthalpy temperature term (oF):[6] | | 146.8 |
| -- Saturation temperature (oF): | | 147.6 |
| -- Inlet dust loading (gr/dscf): | | 1.40 |
| -- Overall control efficiency (fractional): | | 0.85 |
| -- Overall penetration (fractional): | | 0.15 |
| -- Mass median particle diameter (microns): [7] | | 1.7 |
| -- 84th % aerodynamic diameter (microns): [7] | | 3.4 |
| -- Particle cut diameter (microns): [7] | | 0.44 |
| -- Scrubber liquid solids content (lb/lb H2O): | | 0.25 |
| -- Liquid/gas (L/G) ratio (gpm/1000 acfm): | | 17.0 |
| -- Material of construction (see list below):[8] | | 1 |

DESIGN PARAMETERS

| | |
|---|---|
| -- Scrubber pressure drop (in. w.c.): | 0.00 |
| -- Inlet air flowrate (dscfm): [9] | 29,849.6 |
| -- Inlet (= outlet) air flowrate (lb/min): | 2,237.4 |
| -- Outlet water flowrate (lb/min): | 360.2 |
| -- Outlet total stream flowrate (acfm): | 43,093.2 |
| -- Scrubber liquid bleed rate (gpm): | 2.436 |
| -- Scrubber evaporation rate (gpm): | 1.57 |
| -- Scrubber liquid makeup rate (gpm): | 4.00 |

CAPITAL COSTS

| | |
|---|---|
| Equipment Costs ($): | |
| -- Scrubber (base) | 57,752 |
| ' (escalated) | 75,542 |
| -- Other (auxiliaries, e.g.) | 0 |
| -- Total | 75,542 |
| Purchased Equipment Cost ($): | 89,139 |
| Total Capital Investment ($): | 170,256 |

==========

ANNUAL COST INPUTS

| | |
|---|---|
| Operating factor (hr/yr): | 8,760 |
| Operating labor rate ($/hr): | 13 |
| Maintenance labor rate ($/hr): | 14.26 |
| Operating labor factor (hr/sh): | 2 |
| Maintenance labor factor (hr/sh): | 2 |
| Electricity price ($/kWhr): | 0.059 |
| Chemicals price ($/ton): | 0 |
| Process water price ($/1000 gal): | 0.20 |
| Wastewater treatment ($/1000 gal): | 3.80 |
| Overhead rate (fractional): | 0.60 |
| Annual interest rate (fractional): | 0.07 |
| Control system life (years): | 10 |
| Capital recovery factor (system): | 0.1424 |
| Taxes, insurance, admin. factor: | 0.04 |

ANNUAL COSTS

| Item | Cost ($/yr) | Wt. Fact. | W.F.(cond.) |
|---|---|---|---|
| Operating labor | 28,382 | 0.174 | --- |
| Supervisory labor | 4,257 | 0.026 | --- |
| Maintenance labor | 23,415 | 0.143 | --- |
| Maintenance materials | 23,415 | 0.143 | --- |
| Electricity | 0 | 0.000 | --- |
| Chemicals | 0 | 0.000 | --- |
| Process water | 421 | 0.003 | --- |
| Wastewater treatment | 4,865 | 0.030 | --- |
| Overhead | 47,682 | 0.292 | 0.778 |
| Taxes, insurance, administrative | 6,810 | 0.042 | --- |
| Capital recovery | 24,241 | 0.148 | 0.190 |
| Total Annual Cost ($/yr) | 163,490 | 1.000 | 1.000 |

Notes:

[1] Data used to develop this program were taken from 'Estimating Costs of Air Pollution Control' (CRC Press/Lewis Publishers, 1990).

[2] Base equipment costs reflect this date.

[3] VAPCCI = Vatavuk Air Pollution Control Cost Index (for wet scrubbers) corresponding to year and quarter shown. Base equipment cost, purchased equipment cost, and total capital investment have been escalated to this date via the VAPCCI and control equipment vendor data.

[4] Program calculates from the inlet moisture content.

[5] By assumption, the saturation humidity (hs)-temperature (ts) curve is a power function, of the form: hs = A*(ts)^B.

[6] To obtain the saturation temperature, iterate on the saturation humidity. Continue iterating until the saturation temperature and the saturation enthalpy term are approximately equal.

[7] Both the 'mass median' and '84th percentile aerodynamic' diameters are obtained from a log-normal distribution of the inlet stream particle diameters. The particle cut diameter is a graphical function of the the penetration, the mass median diameter, and the standard deviation of the particle size distribution.

[8] Enter one of the following numbers: carbon steel--'1'; rubber-lined carbon steel--'1.6'; epoxy-coated carbon steel--'1.6'; fiber-reinforced plastic (FRP)--'1.6'.

[9] Measured at 70 oF and 1 atmosphere.

Table 4. RGCV FAN - PROPOSED - MEDIUM ENERGY

TOTAL ANNUAL COST SPREADSHEET PROGRAM--HI-ENERGY (VENTURI) SCRUBBERS [1]

COST BASE DATE: June 1988 [2]

VAPCCI (Third Quarter 1995): [3] 115

INPUT PARAMETERS

| | | |
|---|---|---|
| -- Inlet stream flowrate (acfm): | | 153,000 |
| -- Inlet stream temperature (oF): | | 138 |
| -- Inlet moisture content (molar, fraction): | | 0.20 |
| -- Inlet absolute humidity (lb/lb b.d.a.): [4] | | 0.155 |
| -- Inlet water flowrate (lb/min): | | 1261.7 |
| -- Saturation formula parameters: [5] | | |
| | Slope, B: | 3.335 |
| | Intercept,A: | 9.41E-09 |
| -- Saturation absolute humidity (lb/lb b.d.a.): | | 0.1525 |
| -- Saturation enthalpy temperature term (oF):[6] | | 146.4 |
| -- Saturation temperature (oF): | | 145.2 |
| -- Inlet dust loading (gr/dscf): | | 0.00 |
| -- Overall control efficiency (fractional): | | 0.00 |
| -- Overall penetration (fractional): | | 1.00 |
| -- Mass median particle diameter (microns): [7] | | 1.7 |
| -- 84th % aerodynamic diameter (microns): [7] | | 3.4 |
| -- Particle cut diameter (microns): [7] | | 0.44 |
| -- Scrubber liquid solids content (lb/lb H2O): | | 0.25 |
| -- Liquid/gas (L/G) ratio (gpm/1000 acfm): | | 0.0 |
| -- Material of construction (see list below):[8] | | 1 |

DESIGN PARAMETERS

| | |
|---|---|
| -- Scrubber pressure drop (in. w.c.): | 30.00 |
| -- Inlet air flowrate (dscfm): [9] | 108,481.6 |
| -- Inlet (= outlet) air flowrate (lb/min): | 8,131.2 |
| -- Outlet water flowrate (lb/min): | 1240.0 |
| -- Outlet total stream flowrate (acfm): | 154,302.5 |
| -- Scrubber liquid bleed rate (gpm): | 0.000 |
| -- Scrubber evaporation rate (gpm): | -2.61 |
| -- Scrubber liquid makeup rate (gpm): | -2.61 |

CAPITAL COSTS

| | |
|---|---|
| Equipment Costs ($): | |
| -- Fan (base) | 0 |
| ' (escalated) | 0 |
| -- Other (auxiliaries, e.g.) | 0 |
| -- Total | 0 |
| Purchased Equipment Cost ($): | 0 |
| Total Capital Investment ($): | 0 |

==========

ANNUAL COST INPUTS

| | |
|---|---|
| Operating factor (hr/yr): | 8,760 |
| Operating labor rate ($/hr): | 13 |

| | |
|---|---|
| Maintenance labor rate ($/hr): | 14.26 |
| Operating labor factor (hr/sh): | 0 |
| Maintenance labor factor (hr/sh): | 0 |
| Electricity price ($/kWhr): | 0.059 |
| Chemicals price ($/ton): | 0 |
| Process water price ($/1000 gal): | 0.00 |
| Wastewater treatment ($/1000 gal): | 3.80 |
| Overhead rate (fractional): | 0.60 |
| Annual interest rate (fractional): | 0.07 |
| Control system life (years): | 10 |
| Capital recovery factor (system): | 0.1424 |
| Taxes, insurance, admin. factor: | 0.04 |

ANNUAL COSTS

| Item | Cost ($/yr) | Wt. Fact. | W.F.(cond.) |
|---|---|---|---|
| Operating labor | 0 | 0.000 | ---- |
| Supervisory labor | 0 | 0.000 | ---- |
| Maintenance labor | 0 | 0.000 | ---- |
| Maintenance materials | 0 | 0.000 | ---- |
| Electricity | 432,457 | 1.000 | ---- |
| Chemicals | 0 | 0.000 | ---- |
| Process water | 0 | 0.000 | ---- |
| Wastewater treatment | 0 | 0.000 | ---- |
| Overhead | 0 | 0.000 | 0.000 |
| Taxes, insurance, administrative | 0 | 0.000 | ---- |
| Capital recovery | 0 | 0.000 | 0.000 |
| Total Annual Cost ($/yr) | 432,457 | 1.000 | 1.000 |

Notes:

[1] Data used to develop this program were taken from 'Estimating Costs of Air Pollution Control' (CRC Press/Lewis Publishers, 1990).

[2] Base equipment costs reflect this date.

[3] VAPCCI = Vatavuk Air Pollution Control Cost Index (for wet scrubbers) corresponding to year and quarter shown. Base equipment cost, purchased equipment cost, and total capital investment have been escalated to this date via the VAPCCI and control equipment vendor data.

[4] Program calculates from the inlet moisture content.

[5] By assumption, the saturation humidity (hs)-temperature (ts) curve is a power function, of the form: hs = A*(ts)^B.

[6] To obtain the saturation temperature, iterate on the saturation humidity. Continue iterating until the saturation temperature and the saturation enthalpy term are approximately equal.

[7] Both the 'mass median' and '84th percentile aerodynamic' diameters are obtained from a log-normal distribution of the inlet stream particle diameters. The particle cut diameter is a graphical function of the the penetration, the mass median diameter, and the standard deviation of the particle size distribution.

[8] Enter one of the following numbers: carbon steel--'1'; rubber-lined carbon steel--'1.6'; epoxy-coated carbon steel--'1.6'; fiber-reinforced plastic (FRP)--'1.6'.

[9] Measured at 70 oF and 1 atmosphere.

Table 5. DRYER FAN - PROPOSED - MEDIUM ENERGY

TOTAL ANNUAL COST SPREADSHEET PROGRAM–HI-ENERGY (VENTURI) SCRUBBERS [1]

COST BASE DATE: June 1988 [2]

VAPCCI (Third Quarter 1995): [3] 115

INPUT PARAMETERS

| | | |
|---|---|---|
| -- Inlet stream flowrate (acfm): | | 70,000 |
| -- Inlet stream temperature (oF): | | 157 |
| -- Inlet moisture content (molar, fraction): | | 0.20 |
| -- Inlet absolute humidity (lb/lb b.d.a.): [4] | | 0.155 |
| -- Inlet water flowrate (lb/min): | | 559.5 |
| -- Saturation formula parameters: [5] | | |
| | Slope, B: | 3.335 |
| | Intercept,A: | 9.41E-09 |
| -- Saturation absolute humidity (lb/lb b.d.a.): | | 0.1578 |
| -- Saturation enthalpy temperature term (oF):[6] | | 148.8 |
| -- Saturation temperature (oF): | | 146.7 |
| -- Inlet dust loading (gr/dscf): | | 0.00 |
| -- Overall control efficiency (fractional): | | 0.00 |
| -- Overall penetration (fractional): | | 1.00 |
| -- Mass median particle diameter (microns): [7] | | 1.7 |
| -- 84th % aerodynamic diameter (microns): [7] | | 3.4 |
| -- Particle cut diameter (microns): [7] | | 0.44 |
| -- Scrubber liquid solids content (lb/lb H2O): | | 0.25 |
| -- Liquid/gas (L/G) ratio (gpm/1000 acfm): | | 0.0 |
| -- Material of construction (see list below):[8] | | 1 |

DESIGN PARAMETERS

| | |
|---|---|
| -- Scrubber pressure drop (in. w.c.): | 31.00 |
| -- Inlet air flowrate (dscfm): [9] | 48,103.7 |
| -- Inlet (= outlet) air flowrate (lb/min): | 3,605.6 |
| -- Outlet water flowrate (lb/min): | 569.0 |
| -- Outlet total stream flowrate (acfm): | 69,061.1 |
| -- Scrubber liquid bleed rate (gpm): | 0.000 |
| -- Scrubber evaporation rate (gpm): | 1.14 |
| -- Scrubber liquid makeup rate (gpm): | 1.14 |

CAPITAL COSTS

| | |
|---|---|
| Equipment Costs ($): | |
| -- Fan (base) | 80,600 |
| ' (escalated) | 105,427 |
| -- Other (auxiliaries, e.g.) | 0 |
| -- Total | 105,427 |
| Purchased Equipment Cost ($): | 124,404 |
| Total Capital Investment ($): | 124,404 |

ANNUAL COST INPUTS

| | |
|---|---|
| Operating factor (hr/yr): | 8,760 |
| Operating labor rate ($/hr): | 13 |
| Maintenance labor rate ($/hr): | 14.26 |
| Operating labor factor (hr/sh): | 0 |
| Maintenance labor factor (hr/sh): | 0 |
| Electricity price ($/kWhr): | 0.059 |
| Chemicals price ($/ton): | 0 |
| Process water price ($/1000 gal): | 0.00 |
| Wastewater treatment ($/1000 gal): | 3.80 |
| Overhead rate (fractional): | 0.60 |
| Annual interest rate (fractional): | 0.07 |
| Control system life (years): | 10 |
| Capital recovery factor (system): | 0.1424 |
| Taxes, insurance, admin. factor: | 0.04 |

ANNUAL COSTS

| Item | Cost ($/yr) | Wt. Fact. | W.F.(cond.) |
|---|---|---|---|
| Operating labor | 0 | 0.000 | --- |
| Supervisory labor | 0 | 0.000 | --- |
| Maintenance labor | 0 | 0.000 | --- |
| Maintenance materials | 0 | 0.000 | --- |
| Electricity | 200,006 | 0.898 | --- |
| Chemicals | 0 | 0.000 | --- |
| Process water | 0 | 0.000 | --- |
| Wastewater treatment | 0 | 0.000 | --- |
| Overhead | 0 | 0.000 | 0.000 |
| Taxes, insurance, administrative | 4,976 | 0.022 | --- |
| Capital recovery | 17,712 | 0.080 | 0.102 |
| Total Annual Cost ($/yr) | 222,695 | 1.000 | 1.000 |

Notes:

[1] Data used to develop this program were taken from 'Estimating Costs of Air Pollution Control' (CRC Press/Lewis Publishers, 1990).

[2] Base equipment costs reflect this date.

[3] VAPCCI = Vatavuk Air Pollution Control Cost Index (for wet scrubbers) corresponding to year and quarter shown. Base equipment cost, purchased equipment cost, and total capital investment have been escalated to this date via the VAPCCI and control equipment vendor data.

[4] Program calculates from the inlet moisture content.

[5] By assumption, the saturation humidity (hs)-temperature (ts) curve is a power function, of the form: hs = A*(ts)^B.

[6] To obtain the saturation temperature, iterate on the saturation humidity. Continue iterating until the saturation temperature and the saturation enthalpy term are approximately equal.

[7] Both the 'mass median' and '84th percentile aerodynamic' diameters are obtained from a log-normal distribution of the inlet stream particle diameters. The particle cut diameter is a graphical function of the the penetration, the mass median diameter, and the standard deviation of the particle size distribution.

[8] Enter one of the following numbers: carbon steel--'1'; rubber-lined carbon steel--'1.6'; epoxy-coated carbon steel--'1.6'; fiber-reinforced plastic (FRP)--'1.6'.

[9] Measured at 70 oF and 1 atmosphere.

Table 6. REACTOR/VENTS & DRYER SCRUBBER (each)

ALTERNATIVE - HIGH ENERGY

TOTAL ANNUAL COST SPREADSHEET PROGRAM--HI-ENERGY (VENTURI) SCRUBBERS [1]

COST BASE DATE: June 1988 [2]

| | |
|---|---|
| VAPCCI (Third Quarter 1995): [3] | 115 |

INPUT PARAMETERS

| | | |
|---|---|---|
| -- Inlet stream flowrate (acfm): | | 68,000 |
| -- Inlet stream temperature (oF): | | 165 |
| -- Inlet moisture content (molar, fraction): | | 0.20 |
| -- Inlet absolute humidity (lb/lb b.d.a.): [4] | | 0.155 |
| -- Inlet water flowrate (lb/min): | | 536.5 |
| -- Saturation formula parameters: [5] | | |
| | Slope, B: | 3.335 |
| | Intercept,A: | 9.41E-09 |
| -- Saturation absolute humidity (lb/lb b.d.a.): | | 0.1610 |
| -- Saturation enthalpy temperature term (oF):[6] | | 146.8 |
| -- Saturation temperature (oF): | | 147.6 |
| -- Inlet dust loading (gr/dscf): | | 1.20 |
| -- Overall control efficiency (fractional): | | 0.98 |
| -- Overall penetration (fractional): | | 0.02 |
| -- Mass median particle diameter (microns): [7] | | 1.7 |
| -- 84th % aerodynamic diameter (microns): [7] | | 3.4 |
| -- Particle cut diameter (microns): [7] | | 0.44 |
| -- Scrubber liquid solids content (lb/lb H2O): | | 0.25 |
| -- Liquid/gas (L/G) ratio (gpm/1000 acfm): | | 20.0 |
| -- Material of construction (see list below):[8] | | 1 |

DESIGN PARAMETERS

| | |
|---|---|
| -- Scrubber pressure drop (in. w.c.): | 0.00 |
| -- Inlet air flowrate (dscfm): [9] | 46,131.2 |
| -- Inlet (= outlet) air flowrate (lb/min): | 3,457.8 |
| -- Outlet water flowrate (lb/min): | 556.7 |
| -- Outlet total stream flowrate (acfm): | 66,598.5 |
| -- Scrubber liquid bleed rate (gpm): | 3.720 |
| -- Scrubber evaporation rate (gpm): | 2.42 |
| -- Scrubber liquid makeup rate (gpm): | 6.14 |

CAPITAL COSTS

| | |
|---|---|
| Equipment Costs ($): | |
| -- Scrubber (base) | 75,383 |
| (escalated) | 98,603 |
| -- Other (auxiliaries, e.g.) | 0 |
| -- Total | 98,603 |
| Purchased Equipment Cost ($): | 116,352 |
| Total Capital Investment ($): | 222,232 |

==========

ANNUAL COST INPUTS

| | |
|---|---|
| Operating factor (hr/yr): | 8,760 |
| Operating labor rate ($/hr): | 13 |
| Maintenance labor rate ($/hr): | 14.26 |
| Operating labor factor (hr/sh): | 2 |
| Maintenance labor factor (hr/sh): | 2 |
| Electricity price ($/kWhr): | 0.059 |
| Chemicals price ($/ton): | 0 |
| Process water price ($/1000 gal): | 0.20 |
| Wastewater treatment ($/1000 gal): | 3.80 |
| Overhead rate (fractional): | 0.60 |
| Annual interest rate (fractional): | 0.07 |
| Control system life (years): | 10 |
| Capital recovery factor (system): | 0.1424 |
| Taxes, insurance, admin. factor: | 0.04 |

ANNUAL COSTS

| Item | Cost ($/yr) | Wt. Fact. | W.F.(cond.) |
|---|---|---|---|
| Operating labor | 28,382 | 0.161 | ---- |
| Supervisory labor | 4,257 | 0.024 | ---- |
| Maintenance labor | 23,415 | 0.133 | ---- |
| Maintenance materials | 23,415 | 0.133 | ---- |
| Electricity | 0 | 0.000 | ---- |
| Chemicals | 0 | 0.000 | ---- |
| Process water | 645 | 0.004 | ---- |
| Wastewater treatment | 7,430 | 0.042 | ---- |
| Overhead | 47,682 | 0.271 | 0.723 |
| Taxes, insurance, administrative | 8,889 | 0.051 | ---- |
| Capital recovery | 31,641 | 0.180 | 0.231 |
| Total Annual Cost ($/yr) | 175,758 | 1.000 | 1.000 |

Notes:

[1] Data used to develop this program were taken from 'Estimating Costs of Air Pollution Control' (CRC Press/Lewis Publishers, 1990).

[2] Base equipment costs reflect this date.

[3] VAPCCI = Vatavuk Air Pollution Control Cost Index (for wet scrubbers) corresponding to year and quarter shown. Base equipment cost, purchased equipment cost, and total capital investment have been escalated to this date via the VAPCCI and control equipment vendor data.

[4] Program calculates from the inlet moisture content.

[5] By assumption, the saturation humidity (hs)-temperature (ts) curve is a power function, of the form: hs = A*(ts)^B.

[6] To obtain the saturation temperature, iterate on the saturation humidity. Continue iterating until the saturation temperature and the saturation enthalpy term are approximately equal.

[7] Both the 'mass median' and '84th percentile aerodynamic' diameters are obtained from a log-normal distribution of the inlet stream particle diameters. The particle cut diameter is a graphical function of the the penetration, the mass median diameter, and the standard deviation of the particle size distribution.

[8] Enter one of the following numbers: carbon steel--'1'; rubber-lined carbon steel--'1.6'; epoxy-coated carbon steel--'1.6'; fiber-reinforced plastic (FRP)--'1.6'.

[9] Measured at 70 oF and 1 atmosphere.

Table 7. GRANULATOR & COOLER SCRUBBER (each)

ALTERNATIVE - HIGH ENERGY

TOTAL ANNUAL COST SPREADSHEET PROGRAM--HI-ENERGY (VENTURI) SCRUBBERS [1]

COST BASE DATE: June 1988 [2]

| | |
|---|---|
| VAPCCI (Third Quarter 1995): [3] | 115 |

INPUT PARAMETERS

| | | |
|---|---|---|
| -- Inlet stream flowrate (acfm): | | 44,000 |
| -- Inlet stream temperature (oF): | | 165 |
| -- Inlet moisture content (molar, fraction): | | 0.20 |
| -- Inlet absolute humidity (lb/lb b.d.a.): [4] | | 0.155 |
| -- Inlet water flowrate (lb/min): | | 347.2 |
| -- Saturation formula parameters: [5] | | |
| | Slope, B: | 3.335 |
| | Intercept,A: | 9.41E-09 |
| -- Saturation absolute humidity (lb/lb b.d.a.): | | 0.1610 |
| -- Saturation enthalpy temperature term (oF):[6] | | 146.8 |
| -- Saturation temperature (oF): | | 147.6 |
| -- Inlet dust loading (gr/dscf): | | 1.40 |
| -- Overall control efficiency (fractional): | | 0.98 |
| -- Overall penetration (fractional): | | 0.02 |
| -- Mass median particle diameter (microns): [7] | | 1.7 |
| -- 84th % aerodynamic diameter (microns): [7] | | 3.4 |
| -- Particle cut diameter (microns): [7] | | 0.44 |
| -- Scrubber liquid solids content (lb/lb H2O): | | 0.25 |
| -- Liquid/gas (L/G) ratio (gpm/1000 acfm): | | 17.0 |
| -- Material of construction (see list below):[8] | | 1 |

DESIGN PARAMETERS

| | |
|---|---|
| -- Scrubber pressure drop (in. w.c.): | 0.00 |
| -- Inlet air flowrate (dscfm): [9] | 29,849.6 |
| -- Inlet (= outlet) air flowrate (lb/min): | 2,237.4 |
| -- Outlet water flowrate (lb/min): | 360.2 |
| -- Outlet total stream flowrate (acfm): | 43,093.2 |
| -- Scrubber liquid bleed rate (gpm): | 2.808 |
| -- Scrubber evaporation rate (gpm): | 1.57 |
| -- Scrubber liquid makeup rate (gpm): | 4.37 |

CAPITAL COSTS

| | |
|---|---|
| Equipment Costs ($): | |
| -- Scrubber (base) | 57,752 |
| ' (escalated) | 75,542 |
| -- Other (auxiliaries, e.g.) | 0 |
| -- Total | 75,542 |
| Purchased Equipment Cost ($): | 89,139 |
| Total Capital Investment ($): | 170,256 |

ANNUAL COST INPUTS

| | |
|---|---|
| Operating factor (hr/yr): | 8,760 |
| Operating labor rate ($/hr): | 13 |
| Maintenance labor rate ($/hr): | 14.26 |
| Operating labor factor (hr/sh): | 2 |
| Maintenance labor factor (hr/sh): | 2 |
| Electricity price ($/kWhr): | 0.059 |
| Chemicals price ($/ton): | 0 |
| Process water price ($/1000 gal): | 0.20 |
| Wastewater treatment ($/1000 gal): | 3.80 |
| Overhead rate (fractional): | 0.60 |
| Annual interest rate (fractional): | 0.07 |
| Control system life (years): | 10 |
| Capital recovery factor (system): | 0.1424 |
| Taxes, insurance, admin. factor: | 0.04 |

ANNUAL COSTS

| Item | Cost ($/yr) | Wt. Fact. | W.F.(cond.) |
|---|---|---|---|
| Operating labor | 28,382 | 0.173 | --- |
| Supervisory labor | 4,257 | 0.026 | --- |
| Maintenance labor | 23,415 | 0.143 | --- |
| Maintenance materials | 23,415 | 0.143 | --- |
| Electricity | 0 | 0.000 | --- |
| Chemicals | 0 | 0.000 | --- |
| Process water | 460 | 0.003 | --- |
| Wastewater treatment | 5,609 | 0.034 | --- |
| Overhead | 47,682 | 0.290 | 0.774 |
| Taxes, insurance, administrative | 6,810 | 0.041 | --- |
| Capital recovery | 24,241 | 0.148 | 0.189 |
| Total Annual Cost ($/yr) | 164,273 | 1.000 | 1.000 |

Notes:

[1] Data used to develop this program were taken from 'Estimating Costs of Air Pollution Control' (CRC Press/Lewis Publishers, 1990).

[2] Base equipment costs reflect this date.

[3] VAPCCI = Vatavuk Air Pollution Control Cost Index (for wet scrubbers) corresponding to year and quarter shown. Base equipment cost, purchased equipment cost, and total capital investment have been escalated to this date via the VAPCCI and control equipment vendor data.

[4] Program calculates from the inlet moisture content.

[5] By assumption, the saturation humidity (hs)-temperature (ts) curve is a power function, of the form: hs = A*(ts)^B.

[6] To obtain the saturation temperature, iterate on the saturation humidity. Continue iterating until the saturation temperature and the saturation enthalpy term are approximately equal.

[7] Both the 'mass median' and '84th percentile aerodynamic' diameters are obtained from a log-normal distribution of the inlet stream particle diameters. The particle cut diameter is a graphical function of the the penetration, the mass median diameter, and the standard deviation of the particle size distribution.

[8] Enter one of the following numbers: carbon steel--'1'; rubber-lined carbon steel--'1.6'; epoxy-coated carbon steel--'1.6'; fiber-reinforced plastic (FRP)--'1.6'.

[9] Measured at 70 oF and 1 atmosphere.

Table 8. RGCV FAN - ALTERNATIVE - HIGH ENERGY

TOTAL ANNUAL COST SPREADSHEET PROGRAM--HI-ENERGY (VENTURI) SCRUBBERS [1]

COST BASE DATE: June 1988 [2]

VAPCCI (Third Quarter 1995): [3] 115

INPUT PARAMETERS

| | | |
|---|---|---|
| -- Inlet stream flowrate (acfm): | | 153,000 |
| -- Inlet stream temperature (oF): | | 138 |
| -- Inlet moisture content (molar, fraction): | | 0.20 |
| -- Inlet absolute humidity (lb/lb b.d.a.): [4] | | 0.155 |
| -- Inlet water flowrate (lb/min): | | 1261.7 |
| -- Saturation formula parameters: [5] | | |
| | Slope, B: | 3.335 |
| | Intercept,A: | 9.41E-09 |
| -- Saturation absolute humidity (lb/lb b.d.a.): | | 0.1525 |
| -- Saturation enthalpy temperature term (oF):[6] | | 146.4 |
| -- Saturation temperature (oF): | | 145.2 |
| -- Inlet dust loading (gr/dscf): | | 0.00 |
| -- Overall control efficiency (fractional): | | 0.00 |
| -- Overall penetration (fractional): | | 1.00 |
| -- Mass median particle diameter (microns): [7] | | 1.7 |
| -- 84th % aerodynamic diameter (microns): [7] | | 3.4 |
| -- Particle cut diameter (microns): [7] | | 0.44 |
| -- Scrubber liquid solids content (lb/lb H2O): | | 0.25 |
| -- Liquid/gas (L/G) ratio (gpm/1000 acfm): | | 0.0 |
| -- Material of construction (see list below):[8] | | 1 |

DESIGN PARAMETERS

| | |
|---|---|
| -- Scrubber pressure drop (in. w.c.): | 60.00 |
| -- Inlet air flowrate (dscfm): [9] | 108,481.6 |
| -- Inlet (= outlet) air flowrate (lb/min): | 8,131.2 |
| -- Outlet water flowrate (lb/min): | 1240.0 |
| -- Outlet total stream flowrate (acfm): | 154,302.5 |
| -- Scrubber liquid bleed rate (gpm): | 0.000 |
| -- Scrubber evaporation rate (gpm): | -2.61 |
| -- Scrubber liquid makeup rate (gpm): | -2.61 |

CAPITAL COSTS

| | |
|---|---|
| Equipment Costs ($): | |
| -- Fan (base) | 215,000 |
| ' (escalated) | 281,227 |
| -- Other (auxiliaries, e.g.) | 0 |
| -- Total | 281,227 |
| Purchased Equipment Cost ($): | 331,847 |
| Total Capital Investment ($): | 331,847 |

==========

ANNUAL COST INPUTS

| | |
|---|---|
| Operating factor (hr/yr): | 8,760 |
| Operating labor rate ($/hr): | 13 |
| Maintenance labor rate ($/hr): | 14.26 |
| Operating labor factor (hr/sh): | 0 |
| Maintenance labor factor (hr/sh): | 0 |
| Electricity price ($/kWhr): | 0.059 |
| Chemicals price ($/ton): | 0 |
| Process water price ($/1000 gal): | 0.00 |
| Wastewater treatment ($/1000 gal): | 3.80 |
| Overhead rate (fractional): | 0.60 |
| Annual interest rate (fractional): | 0.07 |
| Control system life (years): | 10 |
| Capital recovery factor (system): | 0.1424 |
| Taxes, insurance, admin. factor: | 0.04 |

ANNUAL COSTS

| Item | Cost ($/yr) | Wt. Fact. | W.F.(cond.) |
|---|---|---|---|
| Operating labor | 0 | 0.000 | ---- |
| Supervisory labor | 0 | 0.000 | ---- |
| Maintenance labor | 0 | 0.000 | ---- |
| Maintenance materials | 0 | 0.000 | ---- |
| Electricity | 864,913 | 0.935 | ---- |
| Chemicals | 0 | 0.000 | ---- |
| Process water | 0 | 0.000 | ---- |
| Wastewater treatment | 0 | 0.000 | ---- |
| Overhead | 0 | 0.000 | 0.000 |
| Taxes, insurance, administrative | 13,274 | 0.014 | ---- |
| Capital recovery | 47,248 | 0.051 | 0.065 |
| Total Annual Cost ($/yr) | 925,435 | 1.000 | 1.000 |

Notes:

[1] Data used to develop this program were taken from 'Estimating Costs of Air Pollution Control' (CRC Press/Lewis Publishers, 1990).

[2] Base equipment costs reflect this date.

[3] VAPCCI = Vatavuk Air Pollution Control Cost Index (for wet scrubbers) corresponding to year and quarter shown. Base equipment cost, purchased equipment cost, and total capital investment have been escalated to this date via the VAPCCI and control equipment vendor data.

[4] Program calculates from the inlet moisture content.

[5] By assumption, the saturation humidity (hs)-temperature (ts) curve is a power function, of the form: hs = A*(ts)^B.

[6] To obtain the saturation temperature, iterate on the saturation humidity. Continue iterating until the saturation temperature and the saturation enthalpy term are approximately equal.

[7] Both the 'mass median' and '84th percentile aerodynamic' diameters are obtained from a log-normal distribution of the inlet stream particle diameters. The particle cut diameter is a graphical function of the the penetration, the mass median diameter, and the standard deviation of the particle size distribution.

[8] Enter one of the following numbers: carbon steel--'1'; rubber-lined carbon steel--'1.6'; epoxy-coated carbon steel--'1.6'; fiber-reinforced plastic (FRP)--'1.6'.

[9] Measured at 70 oF and 1 atmosphere.

Table 9. DRYER FAN - ALTERNATIVE - HIGH ENERGY

TOTAL ANNUAL COST SPREADSHEET PROGRAM--HI-ENERGY (VENTURI) SCRUBBERS [1]

COST BASE DATE: June 1988 [2]

VAPCCI (Third Quarter 1995): [3] 115

INPUT PARAMETERS

| | | |
|---|---|---|
| -- Inlet stream flowrate (acfm): | | 70,000 |
| -- Inlet stream temperature (oF): | | 157 |
| -- Inlet moisture content (molar, fraction): | | 0.20 |
| -- Inlet absolute humidity (lb/lb b.d.a.): [4] | | 0.155 |
| -- Inlet water flowrate (lb/min): | | 559.5 |
| -- Saturation formula parameters: [5] | | |
| | Slope, B: | 3.335 |
| | Intercept,A: | 9.41E-09 |
| -- Saturation absolute humidity (lb/lb b.d.a.): | | 0.1578 |
| -- Saturation enthalpy temperature term (oF):[6] | | 148.8 |
| -- Saturation temperature (oF): | | 146.7 |
| -- Inlet dust loading (gr/dscf): | | 0.00 |
| -- Overall control efficiency (fractional): | | 0.00 |
| -- Overall penetration (fractional): | | 1.00 |
| -- Mass median particle diameter (microns): [7] | | 1.7 |
| -- 84th % aerodynamic diameter (microns): [7] | | 3.4 |
| -- Particle cut diameter (microns): [7] | | 0.44 |
| -- Scrubber liquid solids content (lb/lb H2O): | | 0.25 |
| -- Liquid/gas (L/G) ratio (gpm/1000 acfm): | | 0.0 |
| -- Material of construction (see list below):[8] | | 1 |

DESIGN PARAMETERS

| | |
|---|---|
| -- Scrubber pressure drop (in. w.c.): | 60.00 |
| -- Inlet air flowrate (dscfm): [9] | 48,103.7 |
| -- Inlet (= outlet) air flowrate (lb/min): | 3,605.6 |
| -- Outlet water flowrate (lb/min): | 569.0 |
| -- Outlet total stream flowrate (acfm): | 69,061.1 |
| -- Scrubber liquid bleed rate (gpm): | 0.000 |
| -- Scrubber evaporation rate (gpm): | 1.14 |
| -- Scrubber liquid makeup rate (gpm): | 1.14 |

CAPITAL COSTS

| | |
|---|---|
| Equipment Costs ($): | |
| -- Fan (base) | 91,000 |
| ' (escalated) | 119,031 |
| -- Other (auxiliaries, e.g.) | 0 |
| -- Total | 119,031 |
| Purchased Equipment Cost ($): | 140,456 |
| Total Capital Investment ($): | 140,456 |

==========

ANNUAL COST INPUTS

| | |
|---|---|
| Operating factor (hr/yr): | 8,760 |
| Operating labor rate ($/hr): | 13 |

| | |
|---|---|
| Maintenance labor rate ($/hr): | 14.26 |
| Operating labor factor (hr/sh): | 0 |
| Maintenance labor factor (hr/sh): | 0 |
| Electricity price ($/kWhr): | 0.059 |
| Chemicals price ($/ton): | 0 |
| Process water price ($/1000 gal): | 0.00 |
| Wastewater treatment ($/1000 gal): | 3.80 |
| Overhead rate (fractional): | 0.60 |
| Annual interest rate (fractional): | 0.07 |
| Control system life (years): | 10 |
| Capital recovery factor (system): | 0.1424 |
| Taxes, insurance, admin. factor: | 0.04 |

ANNUAL COSTS

| Item | Cost ($/yr) | Wt. Fact. | W.F.(cond.) |
|---|---|---|---|
| Operating labor | 0 | 0.000 | --- |
| Supervisory labor | 0 | 0.000 | --- |
| Maintenance labor | 0 | 0.000 | --- |
| Maintenance materials | 0 | 0.000 | --- |
| Electricity | 387,109 | 0.938 | --- |
| Chemicals | 0 | 0.000 | --- |
| Process water | 0 | 0.000 | --- |
| Wastewater treatment | 0 | 0.000 | --- |
| Overhead | 0 | 0.000 | 0.000 |
| Taxes, insurance, administrative | 5,618 | 0.014 | --- |
| Capital recovery | 19,998 | 0.048 | 0.062 |
| Total Annual Cost ($/yr) | 412,725 | 1.000 | 1.000 |

Notes:

[1] Data used to develop this program were taken from 'Estimating Costs of Air Pollution Control' (CRC Press/Lewis Publishers, 1990).

[2] Base equipment costs reflect this date.

[3] VAPCCI = Vatavuk Air Pollution Control Cost Index (for wet scrubbers) corresponding to year and quarter shown. Base equipment cost, purchased equipment cost, and total capital investment have been escalated to this date via the VAPCCI and control equipment vendor data.

[4] Program calculates from the inlet moisture content.

[5] By assumption, the saturation humidity (hs)-temperature (ts) curve is a power function, of the form: hs = A*(ts)^B.

[6] To obtain the saturation temperature, iterate on the saturation humidity. Continue iterating until the saturation temperature and the saturation enthalpy term are approximately equal.

[7] Both the 'mass median' and '84th percentile aerodynamic' diameters are obtained from a log-normal distribution of the inlet stream particle diameters. The particle cut diameter is a graphical function of the the penetration, the mass median diameter, and the standard deviation of the particle size distribution.

[8] Enter one of the following numbers: carbon steel--'1'; rubber-lined carbon steel--'1.6'; epoxy-coated carbon steel--'1.6'; fiber-reinforced plastic (FRP)--'1.6'.

[9] Measured at 70 oF and 1 atmosphere.