14. Prior to the start-up of the No. 8 BDS, the following conditions attributed to the existing No. 5 Power Boiler shall be satisfied:

a. The stack height shall be raised or other appropriate measures taken in conjunction with the fuel oil sulfur content reduction so as to correct the modeled ambient SO^2 exceedance due to the emissions from the No. 5 power boiler stack. A demonstration in accordance with EPA and state rules shall be utilized to determine the appropriate stack height;

b. A construction permit shall be acquired by submitting an application and the appropriate processing fee to the Department's Bureau of Air Regulation in order to establish a federally enforceable permit and conditions;

c. The No. 6 Fuel Oil sulfur content shall not exceed 2.5%, by weight; and,

d. The No. 6 Fuel Oil input rate shall be limited to a maximum of 92,400 gallons per 24-hour period (midnight to midnight).

Department of Environmental Regulation

Routing and Transmittal Slip

To: (Name, Office, Location)

1. Bruce
2.
3.
4.

Remarks:

I agree with Larry's wording. They have to do whatever it takes to correct the problem.

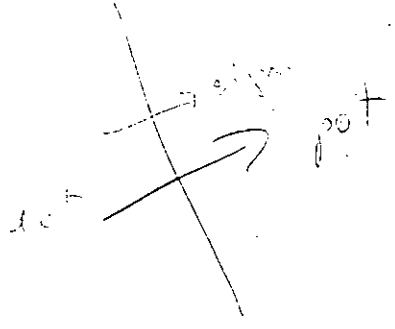

From: Tom

Date 2/18

Phone

OERTEL, HOFFMAN, FERNANDEZ & COLE

A PROFESSIONAL ASSOCIATION

From:
Terry Cole

RECEIVED
FEB 11 1991
DER - BAQM

~~Larry~~ Bruce

Attached is a revised condition that I drafted to try to meet the Secretary's comments on the CCA permits for your consideration.

Thanks for being available by phone for the meeting with EPA.

Tom - Please review & forward to Bruce ASAP. Isn't the modeled violation due to the whole mill or is it predominately PB #5? Larry

Terry

BSW

14. Prior to the start-up of the No. 8 BDS, the following conditions ~~attributed to the existing No. 5 Power Boiler~~ shall be satisfied:

a. The No. 5 Power Boiler stack height shall be raised or other appropriate measures taken to reduce SO_2 emissions from the [No. 5 Power Boiler and/or other sources in the ~~mill~~ facility, facility] ~~in conjunction with the fuel oil sulfur content reduction~~ so as to correct the modeled ambient SO_2 ~~exceedance~~ due to the emissions from the ~~No. 5 power boiler stack~~. A demonstration in accordance with EPA and state rules shall be utilized to determine the appropriate stack height; violation

b. A construction permit for the No. 5 Power Boiler shall be acquired by submitting an application and the appropriate processing fee to the Department's Bureau of Air Regulation in order to establish a federally enforceable permit and conditions;

c. For the facility, The No. 6 Fuel Oil sulfur content shall not exceed 2.5%, by weight, unless 14.a. above results in a more stringent requirement; and,

d. The No. 6 Fuel Oil input rate for the No. 5 Power Boiler shall be limited to a maximum of 92,400 gallons per 24-hour period (midnight to midnight), unless 14.a. above results in a more stringent requirement

14. Prior to the start-up of the No. 8 BDS, the following conditions attributed ~~to the existing No. 5 Power Boiler~~ shall be satisfied:

No. 5 Power Boiler to reduce SO_2 emissions from the [No. 5 Power Boiler and/or other sources in the mill]

a. The stack height shall be raised or other appropriate measures taken ~~in conjunction with the fuel oil sulfur content reduction~~ so as to correct the modeled ambient SO_2 ~~exceedance~~ due to the emissions from the ~~No. 5 power boiler stack~~. A demonstration in accordance with EPA and state rules shall be utilized to determine the appropriate stack height;

violation

mill

b. A construction permit for the No. 5 Power Boiler shall be acquired by submitting an application and the appropriate processing fee to the Department's Bureau of Air Regulation in order to establish a federally enforceable permit and conditions;

c. For the facility, The No. 6 Fuel Oil sulfur content shall not exceed 2.5%, by weight; unless 14.a. above results in a more stringent requirement and,

d. For the No. 5 Power Boiler The No. 6 Fuel Oil input rate shall be limited to a maximum of 92,400 gallons per 24-hour period (midnight to midnight), unless 14.a. above results in a more stringent requirement

Florida Department of Environmental Regulation

Twin Towers Office Bldg. • 2600 Blair Stone Road • Tallahassee, Florida 32399-2400

Lawton Chiles, Governor

Carol M. Browner, Secretary

FAX TRANSMITTAL LETTER

DATE: 2-6-91

TO:

NAME: Mr. Bud Rolofson

AGENCY: NPS-Air

TELEPHONE: (303) 969-2822

OF PAGES (INCLUDE COVER SHEET): 7

FROM:

NAME: Bruce Mitchell

AGENCY: FDER / DARM / BAR

IF ANY PAGES ARE NOT CLEARLY RECEIVED, PLEASE CALL IMMEDIATELY. PHONE NO. 904-488-1344

SENDER'S NAME: R Bruce Mitchell

COMMENTS: PSD-FL-165: response letter from CCA representative

MESSAGE CONFIRMATION FEB-06-'91 WED 15:15

TERM ID: DIV OF AIR RES MGMT P-9999

TEL NO: 904-922-6979

NO.	DATE	ST. TIME	TOTAL TIME	ID	DEPT CODE	OK	NG
530	02-06	15:11	00°04'24	303 9692822		07	00

Florida Department of Environmental Regulation

Twin Towers Office Bldg. • 2600 Blair Stone Road • Tallahassee, Florida 32399-2400

Lawton Chiles, Governor

Carol M. Browner, Secretary

FAX TRANSMITTAL LETTER

DATE: 2-6-91

TO:

NAME: Mr. Lou Nagler

AGENCY: U.S. EPA, Region IV

TELEPHONE: 404-347-5207

OF PAGES (INCLUDE COVER SHEET): 6

FROM:

NAME: Bruce Mitchell / Cleve Holladay

AGENCY: FDER / DARM / BAR

IF ANY PAGES ARE NOT CLEARLY RECEIVED, PLEASE CALL IMMEDIATELY. PHONE NO. 904-488-1344

SENDER'S NAME: R. Bruce Mitchell

COMMENTS: PSD-FL-165 : comments from NPS-Air

MESSAGE CONFIRMATION. FEB-06-'91 WED 14:59

TERM ID: DIV OF AIR RES MGMT P-9999

TEL NO: 904-922-6979

NO.	DATE	ST.TIME	TOTAL TIME	ID	DEPT CODE	OK	NG
528	02-06	14:55	00°03'52	404 347 5207	.	06	00

File Copy

United States Department of the Interior

FISH AND WILDLIFE SERVICE

IN REPLY REFER TO:

MAILING ADDRESS:
Post Office Box 25486
Denver Federal Center
Denver, Colorado 80225

STREET LOCATION:
134 Union Blvd.
Lakewood, Colorado 80228

RW Air Quality
Mail Stop 60130

JAN 31 1991

RECEIVED
FEB 7 1991
DER-BAQM

Mr. C.H. Fancy, P.E., Deputy Chief
Bureau of Air Quality Management
Florida Department of Environmental Regulation
Twin Towers Office Building
2600 Blair Stone Road
Tallahassee, Florida 32399-2400

Dear Mr. Fancy:

We have reviewed the information you forwarded to us regarding the proposed modification to Container Corporation of America's (CCA) kraft pulp and paper mill in Fernandina, Florida. The mill is located approximately 63 km east of Okefenokee Wilderness Area and 74 km south of Wolf Island Wilderness Area. These are class I air quality areas administered by the U.S. Fish and Wildlife Service.

We received the permit application and the preliminary determination in December of 1990. Additionally, we received supplemental refined modeling and visibility analyses, pertinent to our review of potential class I impacts, on January 10 and 29, 1991. We do not believe that we have been given adequate time to review this information, and we question issuing a Preliminary Determination and public notice on the CCA permit application without considering refined air quality modeling and visibility analyses.

Although the public comment period ended on January 25, 1991, we were assured by Mr. Tom Rogers, in a telephone conversation, that our comments and concerns would be considered, and that a letter to the record would be entered into the application file. The letter would state that the Federal Land Manager has concerns about the potential impacts of the proposed modification on nearby class I areas, and that we would be submitting detailed comments at a later date. We, therefore, ask that you consider these comments before you issue a final permit to CCA.

The proposed modification, consisting of a new batch digester and brown stock washer, would result in an increase in actual emissions of sulfur dioxide -- 451.2 tons per year (TPY), nitrogen oxides -- 210 TPY, carbon monoxide -- 316.5 TPY, particulate matter -- 44.6 TPY, beryllium -- 0.0025 TPY, and sulfuric acid mist -- 16.4 TPY. Under the Prevention of Significant Deterioration (PSD) regulations, all the increases are significant, and consequently, PSD review is required for each pollutant. The increases in actual emissions from the mill would be due to the increased capacity provided by the batch digester and brown stock washer,

not to a physical change or change in the method of operation of existing facilities. In a situation such as this, the Environmental Protection Agency (EPA) has determined that a BACT analysis is not required; however, under the PSD regulations, the increases in significant pollutants will consume applicable increments and must undergo air quality analyses.

The CCA states in the permit application that they did not perform a full modeling analysis for each pollutant because "the results indicated that CCA's proposed emission increases for criteria pollutants will not exceed PSD significant impact levels for those pollutants". They say that this decision was agreed to by the Florida Department of Environmental Regulation (FDER). We do not agree with this interpretation of PSD significance levels for sources with the potential to impact class I areas. For your information, we have enclosed a copy of a recent letter to Mr. Gale F. Hoffnagle (Vice President of TRC Environmental Consultants Inc.) detailing our position on significance levels. Also enclosed is a copy of a letter that we received from EPA concurring with our position.

We ask that FDER require CCA to conduct complete increment and cumulative analyses, for all PSD significant pollutants, for the Okefenokee and Wolf Island class I areas before issuing a final permit. An increment analysis should include <u>all</u> increment consuming sources having the potential of impacting the class I areas. To assess potential impacts on sensitive air quality related values, it is important for us to know the <u>total</u> ambient concentrations (increment plus background) at the class I areas. A cumulative analysis should include all permitted and existing sources within 50 km of the facility's impact area that could potentially impact the class I areas (this is especially important for annual affect determinations).

The CCA modeling methodology inappropriately used a half-life for chemical transformation in assessing sulfur dioxide (SO_2) impacts. The EPA <u>Guideline On Air Quality Models (Revised 1986)</u> states, "chemical transformation of SO_2 emitted from point sources or single industrial plants in rural areas is generally assumed to be relatively unimportant to the estimation of maximum concentrations when travel time is limited to a few hours. However, in urban areas, where synergistic effects among pollutants are of considerable consequence, chemical transformation rates may be of concern. In urban area applications, a half-life of 4 hours may be applied to the analysis of SO_2 emissions. Calculation of transformation coefficients from site-specific studies can be used to define a "half-life" to be used in a Gaussian model with any travel time, or in any application, if appropriate documentation is provided." Therefore, based on the information we have received regarding this permit action, a half-life to account for chemical transformation is not supported for use in the modeling analysis for the following reasons: 1) the modeling analysis submitted for assessing impacts in the class I areas was done for a rural, not an urban, application using the rural mode in ISCST; 2) the class I areas are within a "few" hours of the source; and 3) appropriate documentation from site-specific studies for the coefficient that was used was not provided.

At FDER's request, additional modeling was performed using no half-life and a 12-hour half-life decay factor. The results indicated that the 24-hour SO_2 class I increments would be exceeded when no half-life was used but would not be exceeded using the 12-hour half-life. Tom Rogers, in a telephone conversation, indicated that FDER's position is that a 12-hour half-life was justified for a permit issued 9 years ago, for the St. Johns River power plant, and thus is justified in modeling this project. We do not agree with this decision, as it does not address the requirements for use of a half-life factor specifically outlined in EPA's 1986 modeling guideline. Finally, if a half-life is used, the transformed pollutant (SO_2 to sulfate) should be accounted for in visibility and acid rain analyses. In the analyses submitted for the proposed modification, it simply vanishes.

The CCA conducted a visibility screening analysis using the VISCREEN model from the EPA's Workbook for Plume Visual Impact Screening and Analysis (1988). They concluded that the proposed modification would not cause an adverse impact on visibility in Okefenokee Wilderness Area. This broad conclusion cannot be justified based on the type of model that was used. VISCREEN is a plume visual impact screening model intended for use in evaluating the potential for visibility impairment due to plume impacts. In this case, the modeling results only allow a conclusion that there is low potential for visibility impairment due to plumes in the class I area as a result of emissions from the proposed modification. VISCREEN cannot determine a source's potential to contribute to regional haze, which is the most insidious visibility problem in Okefenokee, Wolf Island and the surrounding region. As we have stated in past PSD reviews, visibility in the southern and eastern U.S. has degraded steadily since the early 1950's, with the most dramatic changes occurring in the summer months. Recent studies carried out at nearby Shenandoah NP have shown that sulfates are responsible for nearly 70% of reduced visibility, while organics contribute up to 30% of the problem. At present, it is not possible, in most cases, to estimate the contribution of an individual source to regional haze. However, monitoring and recently developed models may, in the near future, provide a means of assessing the contribution of individual sources to this problem.

In the meantime, we encourage the State of Florida to take all steps possible to reach national and state visibility goals by limiting pollutants, such as SO_2, nitrogen oxides, and volatile organic compounds, that contribute not only to visibility degradation but also to potential acid loading in the class I areas. Recent reports have indicated that oak trees in the Okefenokee Wilderness Area are dying, and until further monitoring and research can be done in both class I areas, acid rain remains a possible cause.

We will await a written reply from you regarding the above comments. If you have any questions regarding this matter, please contact Bud Rolofson of our Air Quality Branch at (303) 969-2071.

Sincerely,

Wilbur N. Ladd, Jr.
Assistant Regional Director
Refuges and Wildlife, Region 6

cc's:
See FAX copy

RECEIVED

FEB 1 - 1991

DER - BAQM

FAX COVER SHEET

U.S. FISH AND WILDLIFE SERVICE, REFUGES AND WILDLIFE, REGION 6
Denver, Colorado
Fax number: FTS 776-4792 or (303) 236-4792

TO: Phone Number: 904-922-6979

FROM: FWS Phone Number: 303-236-8152

DATE: 1-31-91 TIME: 11:10 MST

Number of Pages (including cover sheet): 5

SUBJECT:

If transmission not successful contact:

Phone Number: Susan - 303-236-8152

___ Deliver on regular mail run

___ Call to have picked up

Message:

Deliver ASAP

-Thanks-

2-6-91

Steve, Brian Thompson

FYI, Clair had a copy at the 2-1-91 meeting with CCA.

Thanks,

Bn

January 15, 1991

N3615(475)

Gale F. Hoffnagle, CCM
Vice President and Technical Director
TRC Environmental Consultants, Inc.
800 Connecticut Blvd.
East Hartford, Connecticut 06108

Dear Mr. Hoffnagle:

We recently received an announcement of Executive Enterprises, Inc.'s upcoming conference entitled, "Successfully Obtaining Permits Under the New 1990 Amendments to the Clean Air Act." According to this announcement, you are scheduled to present a session on air quality modeling and monitoring, and one topic to be discussed in this session is "significant impact threshold." Below, we discuss why significant impact levels do not apply when a proposed source could impact a class I area. Because the audience at the upcoming conference may include people who plan to prepare permit applications for projects proposed near class I areas, we ask that you emphasize the fact that significant levels do not apply with respect to class I area impact analyses.

Our office reviews Prevention of Significant Deterioration (PSD) permit applications to assess potential impacts on class I areas administered by the National Park Service or the Fish and Wildlife Service. Over the years, we have encountered many problems with both permit applicants and State permitting authorities misapplying significant impact levels with respect to class I areas. We have had some success in convincing permitting authorities that predetermined significant impact levels do not apply when a class I area could be impacted, but misuse of these levels still continues.

One common problem with permit applications submitted for our review is the lack of cumulative air quality impact analyses. In these instances, permit applicants do not perform an analysis of the proposed source plus all other PSD increment-consuming or background sources. The applicants claim that the proposed project would result in "insignificant" impacts, and therefore, no further analysis is required. Permit applicants generally cite two references to "significant" levels.

The first reference is the term "significant" as defined in the PSD regulations, [40 CFR 52.21(b)(23)], and used in pollutant-specific PSD applicability determinations. As you know, PSD review applies to new major stationary sources and major modifications to existing stationary sources. A major modification is defined as any physical change or change in the method

of operation of a major stationary source that would result in a "significant" net emissions increase of any pollutant subject to regulation under the Clean Air Act. The EPA set significant emission rates individually for each regulated pollutant.

Consistent with the special emphasis Congress has placed on class I areas in developing amendments to the Clean Air Act, more stringent criteria apply to modifications at major stationary sources located near class I areas. Any net emission increase of a regulated pollutant at a major stationary source that is located within 10 kilometers of a class I area must be examined for impacts with an air quality modeling analysis. If the maximum predicted impact on the class I area exceeds 1 microgram per cubic meter (ug/m^3) on a 24-hour basis, the emissions increase is considered "significant" and constitutes a major modification subject to PSD review [see 40 CFR 52.21(b)(23)(iii)].

This 1 ug/m^3 significant level is to be used only for PSD applicability determination purposes. It is used to determine if a proposed modification at a source located within 10 km of a class I area is major, and therefore, subject to PSD review. It should not be used as a predetermined level to define significant air quality impacts in class I areas. Once a source is determined to be subject to PSD review, it is the Federal Land Manager's (FLM) responsibility to determine if the proposed project would significantly impact a class I area.

The second reference to significant levels is discussed in the preamble to EPA's June 19, 1978, PSD regulations in terms of impacts to air quality [43 FR 26398 (1978)]. In performing computer modeling analyses, EPA provides permit applicants with guidance as to the use of the dispersion models. Generally, EPA limits the application of air quality models to a downwind distance of 50 km due to the methods used to establish commonly used dispersion parameters. Also, since the air quality impact of many sources falls off rapidly to insignificant levels, the EPA usually extends the analysis of impacts of a source only to the point where the concentrations from the source fall below certain "significant" impact levels. For example, the sulfur dioxide significant levels are 25, 5, and 1 ug/m^3 for the 3-hr, 24-hr, and annual averaging times, respectively. However, since the 1977 amendments to the Clean Air Act provide special concern for class I areas, EPA adds that any reasonably expected impacts for these areas must be considered irrespective of the 50 km model limitation or the previously mentioned significant levels.

The problem with using predetermined significant impact levels, from an effects standpoint, is discussed in more detail below. However, the following examples illustrate the problem with the misuse of these levels from an increment consumption perspective. The class I, 24-hr, SO_2 increment is 5 ug/m^3. If the 5 ug/m^3 significant level cited in the 1978 preamble is used, two "insignificant" sources, each contributing 4.99 ug/m^3 would nearly double the allowable class I increment, and yet both would be exempt from a detailed increment analysis. Similarly, a source contributing 0.99 ug/m^3 (24-hr average) at a class I area would consume nearly 20% of the class I increment, but still would be less than the 1 ug/m^3 "significant" value cited in 40 CFR 52.21(b)(23)(iii), and would be exempt from detailed review. Applying the 5

ug/m^3 or the 1 ug/m^3 significance levels in these instances would preclude a cumulative impact analysis from being required, in essence, allowing potential class I increment violations. It would also preclude the FLM from making an informed decision regarding the potential impacts on the class I area resources. In addition, using a 24-hr significant level to determine the need for cumulative analyses may allow increment exceedances for the 3-hr or annual averaging times. In other words, the proposed source could be "insignificant" (i.e., less than 1 ug/m^3) for the 24-hr averaging time, yet could cause or contribute to increment violations for the 3-hr or annual averaging times.

Some applicants and State permitting agencies misinterpret the EPA guidance and use the significant levels even though a source is proposing to locate near a class I area. In technical review comments to the permitting authority, we point out this misuse of significant levels, and request that applicants perform a cumulative analysis to assess the total impacts on class I air quality. Permit applicants should be advised of this problem, and to minimize potential delays in the permit review process, should consult with the FLM to determine the need to include detailed cumulative air quality impact analyses in their PSD permit application.

The FLM is not concerned solely with a proposed project's estimated impacts on a class I area's air quality related values (AQRVs), but also with the total pollutant concentration that the AQRVs will experience. Therefore, a cumulative air quality modeling analysis of all sources in the area, which incorporates any measured ambient levels in the area, is an important part of any analysis of potential effects on AQRVs. Without such an analysis, the total pollutant level to which the AQRVs would be exposed cannot be estimated. Consequently, the FLM cannot determine the potential impacts on the class I area resources.

Frequently, the AQRV analysis prepared by PSD applicants lacks this cumulative analysis. As with the air quality analysis, PSD applicants often use the EPA significant levels discussed above, as guidance for assessment of air quality impacts to AQRVs. If the proposed emissions alone result in estimated concentrations below the EPA significant levels, applicants conclude the proposed emissions will have an insignificant impact on class I area AQRVs, and they do not perform a cumulative modeling analysis. Again, this is a misinterpretation of EPA's guidance regarding significant levels. The EPA did not intend the use of significant levels for sources locating near class I areas to be the only criterion used in determining potential impacts to AQRVs in the class I area.

Use of the EPA significant levels by PSD applicants, in an absolute sense, may not offer the protection the FLM needs to be assured that a proposed project will not affect a particular class I area. The FLM's assessment of potential effects on AQRVs considers the sensitivities of specific AQRVs found in the affected class I area and the existing air pollution effects on these resources. Consequently, significant levels may differ due to existing conditions at a particular class I area. If the threshold concentration for effects on sensitive resources is being approached, it is possible that an adverse impact could occur at concentrations below the EPA significant levels.

In addition, once the effects threshold is actually reached, any increase in concentrations in the class I area may be considered significant. For example, the FLM recently determined that visibility, aquatic, and terrestrial resources at Shenandoah National Park (NP), a class I area in Virginia, are currently being adversely impacted by air pollution. The FLM also determined that additional emissions proposed for the area would contribute to, and exacerbate, the existing adverse effects and are, therefore, unacceptable. Consequently, the FLM requested that no new major emission sources be permitted near Shenandoah NP unless it can be assured that such sources would not contribute to the adverse impacts. As another example, because of the relatively high sulfur dioxide concentrations estimated at Theodore Roosevelt NP, and the specific AQRVs found at the park (e.g. lichens), the North Dakota State Department of Health and the FLM agreed that the 24-hour significant level should be 0.2 ug/m^3 for reviews of projects with the potential to impact the park. As conditions change based on scientific data, the significant level for Theodore Roosevelt NP may be even lower for future applications. Significant levels with respect to AQRVs should not be limited to those levels referenced above as representative of the minimum ambient impact to class I resources, but should be based on scientific data showing effects on a case-by-case basis. Therefore, the FLM recommends that permit applicants proposing to construct facilities that could potentially impact a class I area consult with the FLM to determine the specific sensitivities of AQRVs, and to determine the need to include a cumulative impact analysis in their PSD applications.

For your information, we have enclosed a copy of a recent letter from EPA in which they concur with our position on the use of significance levels and commit to consulting with us in future permit reviews. We appreciate your cooperation regarding this matter. If you have any questions please contact me or John Bunyak at (303) 969-2071.

Sincerely,

Christine L. Shaver

Christine L. Shaver
Chief, Policy, Planning
and Permit Review Branch

Enclosure

bcc:
WASO: 475
AQD-DEN: Silva, Rolofson, Maniero
AQD-DEN:JBunyak:jb:1/02/91:x2071:HUFFNGLE.LTR

UNITED STATES ENVIRONMENTAL PROTECTION AGENCY

REGION II
JACOB K. JAVITS FEDERAL BUILDING
NEW YORK, NEW YORK 10278

DEC 14 1990

Robert M. Baker
Regional Director
National Park Service - Southeast Region
75 Spring Street, SW
Atlanta, GA 30303

Re: Hess Oil Virgin Islands Corporation (HOVIC), St. Croix, VI
Prevention of Significant Deterioration of Air Quality (PSD)
Permit Modification
Response to December 5, 1990 Letter

Dear Mr. Baker:

The Environmental Protection Agency (EPA) Region II Office has completed its review of your comments dated December 5, 1990 regarding the proposed modifications to the PSD permit for the Hess Oil Virgin Islands Corporation (HOVIC) refinery in St. Croix, US Virgin Islands. EPA concurs with your evaluation that the proposed permit revisions are not expected to adversely affect the air quality related values (AQRVs) at the Virgin Islands National Park.

With regard to your recommendations requiring cumulative, multi-source impact and visibility analyses at Class I areas, EPA concurs with your statement that the 1 ug/m^3 (24-hr average) significance level is to be used solely for the purpose of determining PSD applicability and that significant impacts can occur at lower concentrations in some situations. EPA will take note of this concern in making future determinations to require such analyses for those sources with the potential to impact Class I areas. In those cases where impacts are estimated to be below 1 ug/m^3, we will consult with your office before such a decision is made.

Thank you for bringing these issues to our attention. Enclosed, for your information, is a copy of the final permit decision for the HOVIC facility. No changes were made from the draft to the final permit and consequently the final permit is effective upon issuance.

Received
12/26/90

If you have any questions regarding this letter, please call Mr. Steven C. Riva, Chief, Air and Environmental Applications Section, Permits Administration Branch, at (212) 264-4711.

Sincerely,

Constantine Sidamon-Eristoff
Regional Administrator

Attachment

cc: Alan Smith, Commissioner
Virgin Islands Department of Planning and Natural Resources

Leonard Reed, Acting Director
Division of Environmental Protection
Virgin Islands Department of Planning and Natural Resources

Ronald DeLugo, Congressman

Roy Adams, Director
Virgin Islands Planning Board

Michael Walsh, President
Saint Croix Environmental Association

W. Stroud, Hess Oil Virgin Islands Corporation

John Bunyak, National Park Service

~~Larry~~
Tom

United States Department of the Interior

NATIONAL PARK SERVICE
AIR QUALITY DIVISION
P.O. BOX 25287
DENVER, CO 80225

IN REPLY REFER TO

DATE: 2-7-91 TIME:

FAX PHONE NO. FTS 327-2822 or (303) 969-2822

NUMBER OF PAGES TO FOLLOW: 10

TO: Tom Rogers

PHONE:

FROM: Bud Robertson

PHONE:

SUBJECT:

REMARKS: Enclosure to C.H. Fancy Ltr.

2-8-91

Barry, BA

FYI. Here are the two letters that were referred to in the NPS's letter of 1/31/91. Please return to me for the file.

Thanks,

Bud

PS: CCA issues

1 - Clem
1 - Tom
1 - Larry
1 - Hard Copy

Steve, Bruce 2-8-91
Thank you 2-18-91

FYI. Here are the two letters referred to in NPS's letter of 1/31/91. Please return to me for the file. Thanks,

Bruce

PS: CCA issues

DEPARTMENT OF ENVIRONMENTAL REGULATION

ROUTING AND TRANSMITTAL SLIP

ACTION NO

ACTION DUE DATE

1. TO: (NAME, OFFICE, LOCATION) ~~Larry~~	Initial / Date
2. ~~Tom~~	Initial / Date
3. Bruce	Initial / Date
4.	Initial / Date

REMARKS:

Are you familiar with information attached. If not, look over it. Send back to Bruce Mitchell.

INFORMATION

- Review & Return
- Review & File
- Initial & Forward

DISPOSITION

- Review & Respond
- Prepare Response
- For My Signature
- For Your Signature
- Let's Discuss

File Copy

OERTEL, HOFFMAN, FERNANDEZ & COLE, P.A.

ATTORNEYS AT LAW

SUZANNE BROWNLESS
M. CHRISTOPHER BRYANT
R. L. CALEEN, JR.
C. ANTHONY CLEVELAND
TERRY COLE
ROBERT C. DOWNIE, II
MARTHA J. EDENFIELD
SEGUNDO J. FERNANDEZ
KENNETH F. HOFFMAN
KENNETH G. OERTEL
HAROLD F. X. PURNELL
PATRICIA A. RENOVITCH
SCOTT SHIRLEY
THOMAS G. TOMASELLO
W. DAVID WATKINS

SUITE C
2700 BLAIR STONE ROAD
TALLAHASSEE, FLORIDA 32301

MAILING ADDRESS:
POST OFFICE BOX 6507
TALLAHASSEE, FLORIDA 32314-6507

TELEPHONE (904) 877-0099
FACSIMILE (904) 877-0981

JOHN H. MILLICAN
ENVIRONMENTAL CONSULTANT
(NOT A MEMBER OF THE FLORIDA BAR)

J. P. SUBRAMANI, PH. D., P. E.
ENVIRONMENTAL CONSULTANT
(NOT A MEMBER OF THE FLORIDA BAR)

February 5, 1991

RECEIVED
FEB 5 1991
DER-BAQM

Steve Smallwood
Director
Division of Air Resources Management
Department of Environmental Regulation
2600 Blair Stone Road
Tallahassee, Florida 32399-2400

Re: **Container Corporation of America**
Proposed Batch Digester and Brown Stock Washer
AC45-190382; AC-45-190383; PSD-FL-165

Dear Mr. Smallwood:

Pursuant to a request this morning by Mr. Larry George of your staff, this letter is for the purpose of requesting that Container Corporation be allowed to raise its stack from 227 ft. MSL to 257 ft. MSL pursuant to Rule 17-2.270, F.A.C.

Container furnished to the Department yesterday afternoon additional modeling by KBN for Power Boiler No. 5. This modeling compared predicted SO_2 impacts of the boiler with and without downwash effects. This model demonstrated that there are significant downwash impacts from the No. 5 power boiler at its current height. These impacts are 500 to 1,000% higher than maximum impacts predicted in the absence of downwash.

We believe that this modeling in conjunction with all of the other modeling previously performed provides adequate demonstration that CCA meets the requirements of Rule 17-2.270(3)(a)2.b., F.A.C. We believe this also demonstrates the actual presence of a local nuisance caused by the existing stack as well as a proposed correction of the condition. We ask that this model which has been approved for review of downwash effects by EPA and DER be utilized as the documentation to verify GEP's stack height for the source. This model also represents the results of a field study by CCA to

verify all building and stack height dimensions in the vicinity of the boiler.

Accordingly, since this was the only remaining issue, we request issuance of the final permit as previously noticed by the Department. We would appreciate the permit being issued as soon as possible. We appreciate the time that you and your staff have given to this issue.

Sincerely,

Terry Cole

Terry Cole

TC/CCA.LTR/SJ

xc: Wayne Barlow
Gary Smallridge
Clair Fancy
Larry George
Bruce Mitchell

Attachment

cc'd: Bud Rolotson, NPS-Air: FAX'd 2-6-91 RAR

February 4, 1991

Mr. Roger Hagan
Container Corporation of America
North 8th Street
Fernandina Beach, FL 32034

Re: Container Corporation of America
Proposed Batch Digester and Brown Stock Washer
AC45-190382; AC45-190383; PSD-FL-165

Dear Mr. Hagan:

In response to a request from Container Corporation of America, Inc. (CCA), KBN has performed additional SO_2 modeling only for Power Boiler No. 5 at CCA. The purpose of this modeling was to compare predicted SO_2 impacts of the boiler with and without downwash effects. All modeling was performed according to the same approach and methodology used in the previous analysis performed for the CCA project. For the downwash modeling, building dimensions used were the same as those presented previously. The results represent screening analysis; refined modeling analysis was not performed.

The results of the additional modeling are presented in the attached tables. Presented in the top portion of Table 1 are the maximum predicted SO_2 impacts for Power Boiler No. 5 (with a stack height of 227 feet), emitting at the proposed SO_2 emission rate of 1,511 lb/hr, and with building downwash effects included. The existing stack height of the boiler is 227 feet. The maximum impacts are predicted at the CCA property boundary and are 20 $\mu g/m^3$, annual average; 283 $\mu g/m^3$, 24-hour average; and 708 $\mu g/m^3$, 3-hour average.

Presented in the bottom portion of Table 1 are the modeling results based on no downwash effects for Power Boiler No. 5. The maximum predicted SO_2 concentrations are 2.3 $\mu g/m^3$, annual average; 28 $\mu g/m^3$, 24-hour average; and 102 $\mu g/m^3$, 3-hour average. These maximum predicted impacts occur in general well beyond the CCA property boundaries.

These results show that the effects of building downwash on Power Boiler No. 5 increase maximum concentrations resulting from this source only by a factor between 5 and 10.

To further support this conclusion, the ISCST model was executed with Power Boiler No. 5 with and without downwash in the same model run. Emissions for the no downwash source were specified as negative. In this manner, the net increase in impacts is produced on a period-by-period basis. The maximum net increase in impacts is presented in Table 2. These results are identical to the results of

KBN ENGINEERING AND APPLIED SCIENCES, INC.
1034 Northwest 57th Street Gainesville, Florida 32605 904/331-9000 FAX: 904/332-4189

Power Boiler No. 5 only with downwash, demonstrating that the downwash and no downwash maximum impacts occur at significantly different locations.

In conclusion, downwash effects for Power Boiler No. 5 cause significant increases in maximum predicted SO_2 impacts of the boiler. These impacts are 500 to 1,000 percent higher than maximum impacts predicted in the absence of downwash.

Supportive computer model printouts will be supplied at your request. After your review of this information, please call if you have any questions.

Sincerely,

David A. Buff

David A. Buff, M.E., P.E.
Principal Engineer

Attachments

cc: Terry Cole

Table 1. Predicted Impacts of Power Boiler No. 5 at 227 Feet[a]

Averaging Time	Year	SO_2 Concentration ($\mu g/m^3$)	Direction (°)	Distance (m)
With Downwash				
Annual	1983	19	230	472
	1984	14	230	472
	1985	20	240	514
	1986	15	240	514
	1987	20	230	472
3-Hour	1983	599	260	526
	1984	575	270	431
	1985	708	230	472
	1986	545	230	472
	1987	633	230	472
24-Hour	1983	233	230	472
	1984	168	230	472
	1985	283	230	472
	1986	190	230	472
	1987	232	230	472
Without Downwash				
Annual	1983	1.7	130	3,000
	1984	1.9	310	2,500
	1985	1.7	260	2,500
	1986	1.9	300	2,500
	1987	2.3	120	2,500
3-Hour	1983	87	80	2,500
	1984	94	90	2,100
	1985	96	360	1,000
	1986	102	300	1,700
	1987	93	90	2,100
24-Hour	1983	23	220	5,000
	1984	24	280	1,700
	1985	23	190	2,100
	1986	28	300	2,100
	1987	24	120	1,700

Note: Highest, second-highest impacts are presented for short-term averaging times.

[a]Current stack height of Power Boiler No. 5 is 227 feet.

Table 2. Predicted Impacts of Power Boiler No. 5 at 227 Feet[a], Net Difference Between Downwash and No Downwash

Averaging Time	Year	SO_2 Concentration ($\mu g/m^3$)	Direction (°)	Distance (m)
Annual	1983	19	230	472
	1984	14	230	472
	1985	20	240	514
	1986	14	240	514
	1987	20	230	472
3-Hour	1983	599	260	526
	1984	575	270	431
	1985	708	230	472
	1986	545	230	472
	1987	633	230	472
24-Hour	1983	233	230	472
	1984	168	230	472
	1985	283	230	472
	1986	190	230	472
	1987	232	230	472

[a]Current stack height of Power Boiler No. 5 is 227 feet.

Florida Department of Environmental Regulation

Twin Towers Office Bldg. • 2600 Blair Stone Road • Tallahassee, Florida 32399-2400

Bob Martinez, Governor Dale Twachtmann, Secretary John Shearer, Assistant Secretary

FAX TRANSMITTAL LETTER

DATE: 1-31-91

TO:

NAME: Bud Rolofson / Chris Shaver
AGENCY: NPS- Air

TELEPHONE: 303-969-2822

OF PAGES (INCLUDE COVER SHEET): 3

FROM:

NAME: Bruce Mitchell

AGENCY: FDER/DARM/BAR

IF ANY PAGES ARE NOT CLEARLY RECEIVED, PLEASE CALL IMMEDIATELY. PHONE NO. 904-488-1344

SENDER'S NAME: R Bruce Mitchell

COMMENTS: FYI. EPA's comments on PSD-FL-165

MESSAGE CONFIRMATION JAN-31-'91 THU 11:11

TERM ID: DIV OF AIR RES MGMT P-9999

TEL NO: 904-922-6979

NO.	DATE	ST. TIME	TOTAL TIME	ID	DEPT CODE	OK	NG
512	01-31	11:09	00°02'05	303 9692822		03	00

Florida Department of Environmental Regulation

Twin Towers Office Bldg. • 2600 Blair Stone Road • Tallahassee, Florida 32399-2400

Bob Martinez, Governor Dale Twachtmann, Secretary John Shearer, Assistant Secretary

FAX TRANSMITTAL LETTER

DATE: 1-31-91

TO:

NAME: David Buff
AGENCY: KBN

TELEPHONE: (904) 332-4189

OF PAGES (INCLUDE COVER SHEET): 3

FROM:

NAME: Bruce Mitchell

AGENCY: FDER / DARM / BAR

IF ANY PAGES ARE NOT CLEARLY RECEIVED, PLEASE CALL IMMEDIATELY. PHONE NO. (904)488-1344

SENDER'S NAME: R Bruce Mitchell

COMMENTS: As we spoke, here are the comments from EPA.

MESSAGE CONFIRMATION JAN-31-'91 THU 11:14

TERM ID: DIV OF AIR RES MGMT P-9999

TEL NO: 904-922-6979

NO.	DATE	ST. TIME	TOTAL TIME	ID	DEPT CODE	OK	NG
513	01-31	11:12	00'02'02	9043324189		03	00

File Copy
PSD-FL-165
AC 45-190382
AC 45-190383

UNITED STATES ENVIRONMENTAL PROTECTION AGENCY

REGION IV

345 COURTLAND STREET, N.E.
ATLANTA, GEORGIA 30365

JAN 29 1991

RECEIVED
FEB 1 1991
DER-BAQM

4APT-AEB

Mr. Clair H. Fancy, P.E., Chief
Bureau of Air Regulation
Florida Department of Environmental
Regulation
Twin Towers Office Building
2600 Blair Stone Road
Tallahassee, Florida 32399-2400

RE: Container Corporation of America, Inc. (PSD-FL-165)

Dear Mr. Fancy:

This is to acknowledge receipt of your preliminary determination and draft permits for the proposed modification to the above referenced source dated December 20, 1990. It is our understanding that the public comment period for this action began on December 26, 1990.

As discussed between Mr. Tom Rogers of your staff and Mr. Lew Nagler of my staff, we do have concerns about the modelling performed. One of the areas of concern is the use of a SO_2 half-life in the modelling of the impacts on the Class I areas. It is our understanding that DER has requested that the applicant repeat the modelling with the scenarios of: a) no half-life; b) using a decay coefficient equivalent to a 12-hour half-life; and c) using a 4-hour half-life.

Our other major concerns are as follows:

1. In order to resolve a 24-hour sulfur dioxide modelling exceedence, it has been proposed that the mill's Number 5 Power Boiler stack be raised from 227 feet to 257 feet. Since the existing stack height is greater than 65 meters (de mimimis height in stack height regulations), the stack height cannot be raised, even if the new height is still below formula height, unless the exceedence is caused by excessive downwash. If such is the case and a demonstration is made to that effect, then the stack may be raised to GEP. Please see the final rule on the Stack Height Regulations, at 50 FR 27893 to 27899 (July 8, 1985), regarding what is required to demonstrate excessive downwash. Absent such a demonstration, the model must be performed utilizing the existing stack height.

2. The mill's contribution to the total 24-hour exceedence is above the de minimis level of 5 ug/m^3, thus causing or contributing to a violation of the NAAQS. In accordance with the requirement of 40 CFR §51.165(b), before a PSD

permit can be granted, the source must obtain sufficient emission reductions to offset its adverse ambient impact to below the significant impact level. In effect this means that mitigating actions must be included as a condition of the permit and such actions must take place prior to startup of the permitted unit. Please find enclosed a recent letter from EPA Region III to Virginia which describes EPA's policy in this situation.

Several minor concerns with the modelling are as follows:

1. There is no information in the report to indicate that other increment consuming sources were modelled for their impact on the two Class I areas. Any such increment consuming sources must be included in the analysis if they will have a joint impact on CCA.

2. Total cloud cover from the surface weather station was used in lieu of opaque cloud cover. An explanation of why total cloud cover was used should be included.

3. There was discussion of whether downwash should have been included in the analysis for Gilman Paper or ITT Rayonier Corporation, the two closest sources to CCA. This analysis should be included if appropriate.

Thank you for the opportunity to review and comment on this package. We apologize for not having our comments completed at an earlier date. If you have any questions, please contact Mr. Nagler at (404) 347-2904.

Sincerely yours,

Jewell A. Harper, Chief
Air Enforcement Branch
Air, Pesticides, and Toxics
Management Division

Enclosure

UNITED STATES ENVIRONMENTAL PROTECTION AGENCY
REGION IV
345 COURTLAND STREET, N.E.
ATLANTA, GEORGIA 30365

RECEIVED
FEB 1 1991
DER-BAQM

4APT-AEB

JAN 24 1991

Mr. Clair H. Fancy, P.E., Chief
Bureau of Air Regulation
Florida Department of Environmental
Regulation
Twin Towers Office Building
2600 Blair Stone Road
Tallahassee, Florida 32399-2400

RE: Container Corporation of America, Inc. (PSD-FL-165)

Dear Mr. Fancy:

This is to acknowledge receipt of your preliminary determination and draft permits for the proposed modification to the above referenced source dated December 20, 1990. It is our understanding that the public comment period for this action began on December 26, 1990.

Although our review is not complete, we do have concerns about the modelling performed as discussed between Mr. Tom Rogers of your staff and Mr. Lew Nagler of my staff on January 25, 1991. At present the specific area of concern is the use of a SO_2 half-life in the modelling of the impacts on the Class I areas. We will have complete comments on this issue by COB Monday, January 28, 1991. We are requesting that you hold the comment period open so that our specific comments may be included in the decision making process for issuing these permits.

Thank you for the opportunity to review and comment on this package. We apologize for not having our comments completed at an earlier date; however, our comments will be coordinated between Mr. Nagler and Mr. Rogers. If you have any questions, please contact Mr. Nagler at (404) 347-2904.

Sincerely yours,

Jewell A. Harper, Chief
Air Enforcement Branch
Air, Pesticides, and Toxics
Management Division

B. Mitchell
C. Holladay
A. Kutzner, NE Dist.
R. Robertson, BESD
CHF/BA

P 052 482 245

RECEIPT FOR CERTIFIED MAIL

NO INSURANCE COVERAGE PROVIDED
NOT FOR INTERNATIONAL MAIL
(See Reverse)

Sent to Mr. Wayne S. Barlow, CCA	
Street and No. N. 8th St., P.O. Box 2000	
P.O., State and ZIP Code Fernandina Beach, FL 32034	
Postage	$
Certified Fee	
Special Delivery Fee	
Restricted Delivery Fee	
Return Receipt showing to whom and Date Delivered	
Return Receipt showing to whom, Date, and Address of Delivery	
TOTAL Postage and Fees	$
Postmark or Date Mailed: 4-18-90 Permit: AC 45-141878	

PS Form 3800, June 1985

SENDER: Complete items 1 and 2 when additional services are desired, and complete items 3 and 4.
Put your address in the "RETURN TO" Space on the reverse side. Failure to do this will prevent this card from being returned to you. The return receipt fee will provide you the name of the person delivered to and the date of delivery. For additional fees the following services are available. Consult postmaster for fees and check box(es) for additional service(s) requested.

1. ☐ Show to whom delivered, date, and addressee's address. *(Extra charge)*
2. ☐ Restricted Delivery *(Extra charge)*

3. Article Addressed to: Mr. Wayne S. Barlow V.P. and General Manager Container Corp. of America North 8th St. P. O. Box 2000 Fernandina Beach, FL 32034	4. Article Number P 052 482 245 Type of Service: ☐ Registered ☐ Insured ☒ Certified ☐ COD ☐ Express Mail ☐ Return Receipt for Merchandise Always obtain signature of addressee or agent and DATE DELIVERED.
5. Signature — Address X	8. Addressee's Address *(ONLY if requested and fee paid)*
6. Signature — Agent X	
7. Date of Delivery 11-19-90	

PS Form 3811, Mar. 1988 ★ U.S.G.P.O. 1988-212-865 DOMESTIC RETURN RECEIPT

Florida Department of Environmental Regulation

Twin Towers Office Bldg. • 2600 Blair Stone Road • Tallahassee, Florida 32399-2400

Bob Martinez, Governor Dale Twachtmann, Secretary John Shearer, Assistant Secretary

April 12, 1990

CERTIFIED MAIL - RETURN RECEIPT REQUESTED

Mr. Wayne S. Barlow
V.P. and General Manager
Container Corporation of America
North 8th Street
Post Office Box 2000
Fernandina Beach, Florida 32034

Dear Mr. Barlow:

Re: Request for Permit Exemption
Lime Slaker Systems: AC 45-141878

Based on the documentation provided by Mr. David A. Buff, P.E. of Record, of the configuration changes to the currently permitted lime slaker systems, the Department is in agreement that the currently permitted air sources would not require air source permitting since there are no projected potential pollutant emissions. Therefore, the lime slaker systems, as depicted in the letter with enclosures from Mr. D. A. Buff and received on April 2, 1990, are exempted from air source permitting at this time, pursuant to F.A.C. Rule 17-4.040(1)(b), and the appropriate Departmental records will be amended to reflect this.

Sincerely,

STEVE SMALLWOOD, P.E.
Director
Division of Air Resources
Management

SS/BM/plm

Attachments

c: D. A. Buff, P.E., KBN
S. Luedtke, CCA
R. Hagan, CCA
A. Kutyna, NE District

For Routing To Other Than The Addressee	
To:	Location:
To:	Location:
To:	Location:
From:	Date:

State of Florida
DEPARTMENT OF ENVIRONMENTAL REGULATION

Interoffice Memorandum

TO: Steve Smallwood

FROM: Clair Fancy

DATE: April 12, 1990

SUBJ: Approval of an Exemption
Lime Slaker Systems (AC 45-141878)
Container Corporation of America (CCA)

Attached for your approval and signature is a letter exempting the currently permitted (AC 45-141878) lime slaker systems at CCA from the requirements of air permitting. The exemption is based on the fact that there are no potential pollutant emissions to the atmosphere under the sources' current configuration. There is no controversy associated with this action.

I recommend your approval and signature.

CF/BM/plm

Attachment

RECEIVED

APR 02 1990

DER BAQM

March 30, 1990
90017

Mr. C. H. Fancy, P.E.
Chief, Bureau of Air Regulation
Florida Department of Environmental Regulation
2600 Blair Stone Road
Tallahassee, Florida 32399-2400

RE: Container Corporation of America, Fernandina Beach
Lime Slaker Systems Configuration change AC45-141878

Dear Mr. Fancy:

This correspondence is in response to your letter to Mr. Scott Luedtke of Container Corporation of America (CCA) dated March 8, 1990. This letter requested that CCA's engineer-of-record submit information related to the change in the design of the lime slaker systems. Being the original engineer-of-record for the construction permit, CCA has retained my services to provide this information.

Basically, the only change that has been made by CCA to the two lime slaking systems is that the exhaust gases from each slaker scrubber, instead of discharging through a stack to the atmosphere, drain through a vertical pipe along with the scrubber water to a u-drain and then discharge directly to a mill sewer. As a result, there are no air emissions from the lime slaking systems. Mr. Andy Kutyna of the FDER Northeast District concurred with this conclusion during his recent plant visit.

Attached are three figures. The first shows the revised configuration of the slaker scrubbers exhaust. The remainder of the causticizing system has not changed. The second drawing shows the location of each scrubber on the two slakers, and the third drawing shows a detail view of each scrubber.

Please review this information, and take appropriate action to remove the slakers from the construction permit.

Sincerely,

David A. Buff

David A. Buff, PE
Principal Engineer

cc: Ron Caffo, CCA
Roger Hagan, CCA
Andy Kutyna, FDER Jacksonville
Bruce Mitchell, FDER Tallahassee

enclosures
DAB/mla

KBN ENGINEERING AND APPLIED SCIENCES, INC.
1034 Northwest 57th Street Gainesville, Florida 32605 904/331-9000 FAX: 904/332-4189

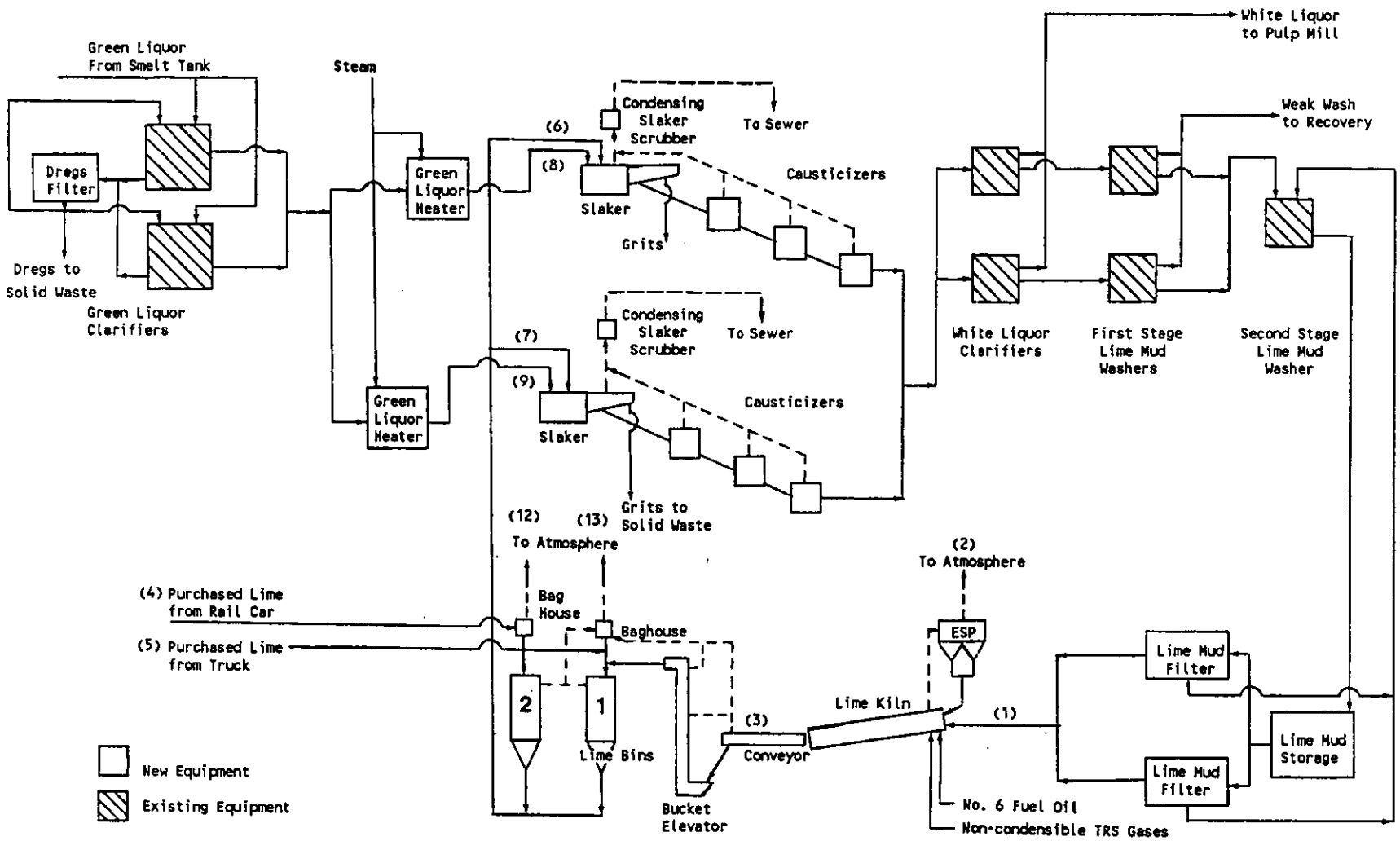

FLOW DIAGRAM OF NEW CCA CAUSTICIZING SYSTEM

KBN

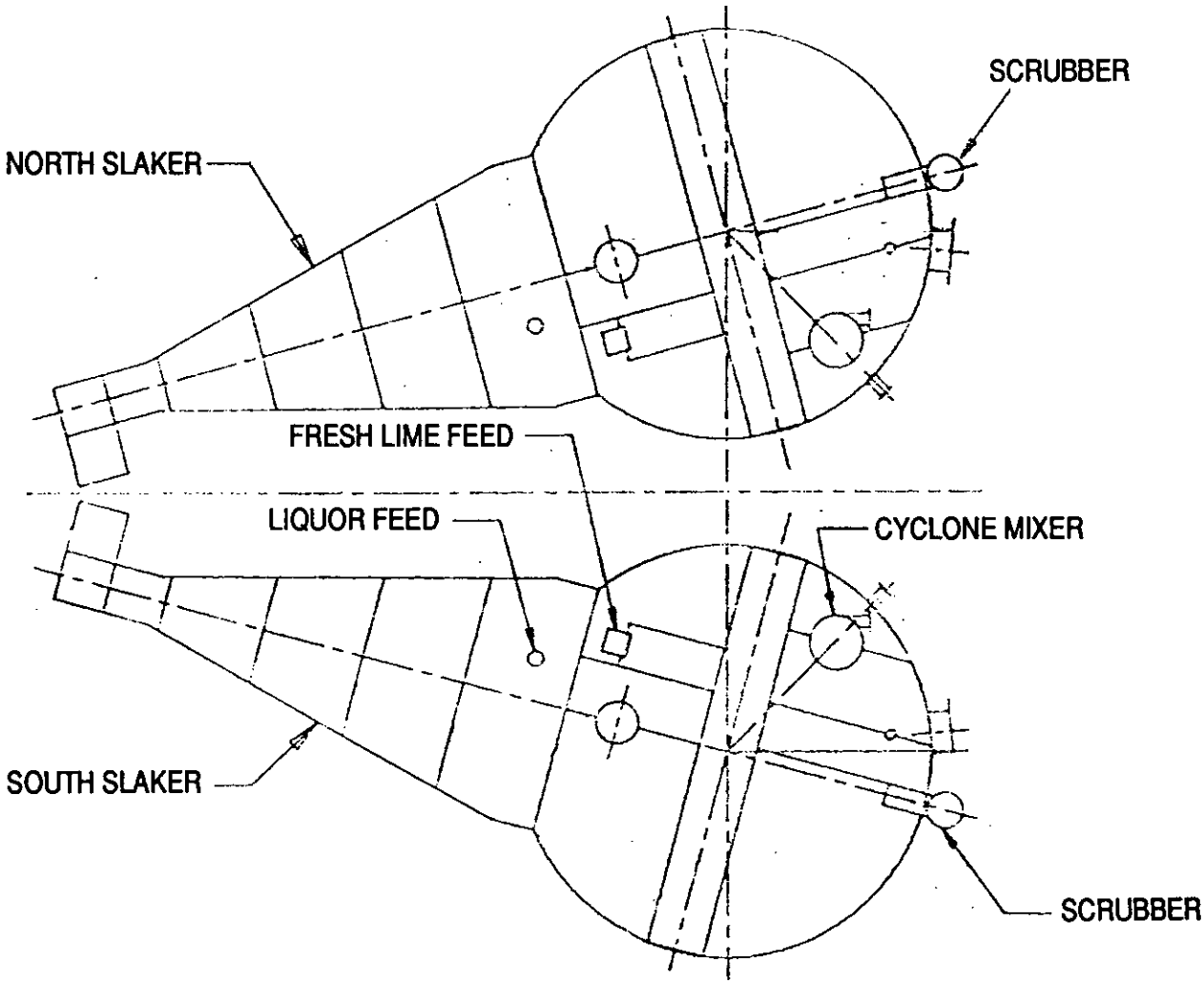

PLAN VIEW OF SLAKERS

KBN

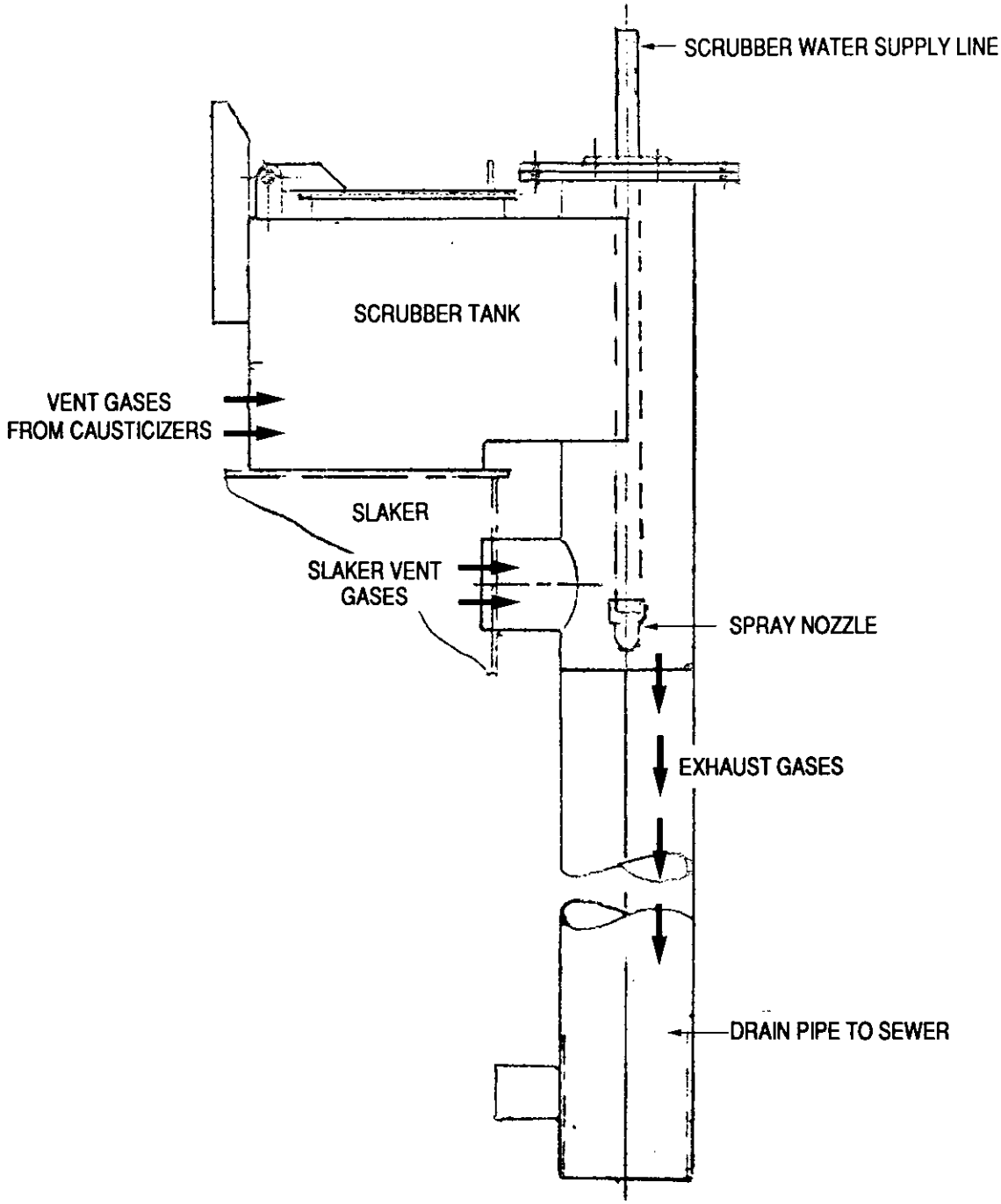

SLAKER SCRUBBER DETAIL

KBN

P 938 762 782

RECEIPT FOR CERTIFIED MAIL

NO INSURANCE COVERAGE PROVIDED
NOT FOR INTERNATIONAL MAIL
(See Reverse)

Sent to Mr. Scott E. Luedtke, CCA	
Street and No. N. 8th St., P.O. Box 2000	
P.O., State and ZIP Code Fernandina Beach, FL 32034	
Postage	$
Certified Fee	
Special Delivery Fee	
Restricted Delivery Fee	
Return Receipt showing to whom and Date Delivered	
Return Receipt showing to whom, Date, and Address of Delivery	
TOTAL Postage and Fees	$
Postmark or Date Mailed: 3-9-90 Permit: AC 45-141878	

PS Form 3800, June 1985

SENDER: Complete items 1 and 2 when additional services are desired, and complete items 3 and 4.
Put your address in the "RETURN TO" Space on the reverse side. Failure to do this will prevent this card from being returned to you. The return receipt fee will provide you the name of the person delivered to and the date of delivery. For additional fees the following services are available. Consult postmaster for fees and check box(es) for additional service(s) requested.
1. ☐ Show to whom delivered, date, and addressee's address. *(Extra charge)*
2. ☐ Restricted Delivery *(Extra charge)*

3. Article Addressed to: Mr. Scott E. Luedtke, Environmental Supervisor, Container Corp. of America, North 8th Street, P. O. Box 2000, Fernandina Beach, FL 32034	4. Article Number P 938 762 782
	Type of Service: ☐ Registered ☐ Insured ☒ Certified ☐ COD ☐ Express Mail ☐ Return Receipt for Merchandise
	Always obtain signature of addressee or agent and DATE DELIVERED.
5. Signature — Address X	8. Addressee's Address *(ONLY if requested and fee paid)*
6. Signature — Agent X [signature]	
7. Date of Delivery 3-12-90	

PS Form 3811, Mar. 1988 ★ U.S.G.P.O. 1988-212-865 DOMESTIC RETURN RECEIPT

Florida Department of Environmental Regulation

Twin Towers Office Bldg. ● 2600 Blair Stone Road ● Tallahassee, Florida 32399-2400

Bob Martinez, Governor Dale Twachtmann, Secretary John Shearer, Assistant Secretary

March 8, 1990

CERTIFIED MAIL - RETURN RECEIPT REQUESTED

Mr. Scott E. Luedtke
Environmental Supervisor
Container Corporation of America
North 8th Street
Post Office Box 2000
Fernandina Beach, Florida 32034

Dear Mr. Luedtke:

Re: Lime Slaker Systems' Configuration Change
AC 45-141878

The Department has reviewed your letter received February 26, 1990, regarding the two lime slaker systems and their as built configurations, which are different from what was received and permitted. In order to remove the lime slakers (2) from any permitting requirements, please have the P.E. of record submit revisions of the pertinent documents (i.e., plans, drawings, etc.), reflecting the changes that have been made from the original submittal. Upon receipt of this material, an amendment will be made to the referenced construction permit to remove the two lime slakers from permitting requirements at this time.

If there are any questions, please call Bruce Mitchell at (904) 488-1344 or write to me at the above address.

Sincerely,

C. H. Fancy, P.E.
Chief
Bureau of Air Regulation

CHF/plm

c: R. Hagan, CCA
A. Kutyna, NE District

CM: P 724 305 895
PM: 3-22-90; Fernandina Beach, FL

File Copy

CONTAINER CORPORATION OF AMERICA

AN AFFILIATE OF JEFFERSON SMURFIT CORPORATION

Mill Division
NORTH 8TH STREET
P.O. BOX 2000
FERNANDINA BEACH, FL 32034
TELEPHONE: 904/261-5551

CERTIFIED MAIL

RECEIVED
FEB 26 1990
DER-BAQM

February 20, 1990

Mr. Clair Fancy, P.E.
Chief, Bureau of Air Regulation
Florida Department of Environmental Regulation
2600 Blair Stone Road
Tallahassee, FL 32399-2400

Re: Particulate Matter (PM) Emissions Testing Requirements
Lime Slakers/Lime Bins & Associated Control Sys.
Permit Number: AC 45-141878

Dear Mr. Fancy:

This letter is to follow-up discussions I've had with Mr. Andy Kutyna and Mr. Bruce Mitchell on February 14 and February 15, 1990 regarding particulate matter emission limitations of the slaker vents as outlined in Specific Condition No. 4 of the referenced permit.

During a tour of our No. 4 Lime Kiln and slaker area on November 28, 1989, Mr. Kutyna and I discovered that the configuration of the referenced slaker vents is such that the emissions pass through a wet scrubber and are then discharged directly to a sewer. As a result of this design, particulate matter during normal and expected operations will not be released into the air from the slakers. Mr. Kutyna confirmed that based on his emissions testing experience the slaker vent design and configuration at this facility will not allow particulate emissions into the air, and moreover there is no EPA method available to test for particulate matter emissions into the air from this type control device configuration. At that time Mr. Kutyna suggested we correspond with you regarding this matter to allow for amendment of the appropriate specific conditions in the referenced construction permit. We elected to prove out the vent design prior to correspondence to account for any modifications to the vent system if required. After several months of operation the slaker vent design has proven to operate extremely effectively as designed and required no further modification.

In our February 15th telephone conversation, Mr. Mitchell agreed that it is better to address this matter with a letter of request prior to issuance of the final operating permit. This letter is to serve as a written request to amend the referenced permit due to the slaker control device configuration as described above.

Should you have any further questions regarding this matter, please contact either me (904-277-5807) or Roger Hagan (904-277-5808).

Sincerely,

Scott E. Luedtke
Environmental Supervisor

SEL/js

cc: A. Kutyna - FDER NE District
B. Mitchell - FDER Tallahassee
R. Hagan
R. Caffo
B. Campbell
Env. File

File Copy

UNITED STATES ENVIRONMENTAL PROTECTION AGENCY

REGION IV

345 COURTLAND STREET NE
ATLANTA, GEORGIA 30365

4APT-AEB

JAN 24 1991

Mr. Clair H. Fancy, P.E., Chief
Bureau of Air Regulation
Florida Department of Environmental
Regulation
Twin Towers Office Building
2600 Blair Stone Road
Tallahassee, Florida 32399-2400

RE: Container Corporation of America, Inc. (PSD-FL-165)

Dear Mr. Fancy:

This is to acknowledge receipt of your preliminary determination and draft permits for the proposed modification to the above referenced source dated December 20, 1990. It is our understanding that the public comment period for this action began on December 26, 1990.

Although our review is not complete, we do have concerns about the modelling performed as discussed between Mr. Tom Rogers of your staff and Mr. Lew Nagler of my staff on January 25, 1991. At present the specific area of concern is the use of a SO_2 half-life in the modelling of the impacts on the Class I areas. We will have complete comments on this issue by COB Monday, January 28, 1991. We are requesting that you hold the comment period open so that our specific comments may be included in the decision making process for issuing these permits.

Thank you for the opportunity to review and comment on this package. We apologize for not having our comments completed at an earlier date; however, our comments will be coordinated between Mr. Nagler and Mr. Rogers. If you have any questions, please contact Mr. Nagler at (404) 347-2904.

Sincerely yours,

Jewell A. Harper, Chief
Air Enforcement Branch
Air, Pesticides, and Toxics
Management Division

cc'd: Bruce Mitchell
BAICHF
Cleve Holladay
Bill Rolofson - NPS FAX'd 1-25-91
FAX 1-25-91

RECEIVED
JAN 25 1991
DER - BAQM

UNITED STATES ENVIRONMENTAL PROTECTION AGENCY - REGION IV
AIR, PESTICIDES AND TOXICS MANAGEMENT DIVISION
345 Courtland Street, N.E.
Atlanta, Georgia 30365
Fax Number: FTS 257-5207 or (404) 347-5207

FACSIMILE TRANSMISSION SHEET

DATE: 1/25/91 NUMBER OF PAGES (including this sheet) 2
(preparer must number all pages)

TO: Bruce Mitchell PHONE: (904) 488-1344

ADDRESS: FDER / BAR FAX NO. (904) 922-6979

FROM: GREGG WORLEY PHONE: (404) 347-2904

If the following pages are received poorly, please call _____
at FTS 257- _____ or (404) 347- _____

SPECIAL INSTRUCTIONS FOR RECEIVER: _____

RECEIVED
JAN 25 1991
DER - BAQM

UNITED STATES ENVIRONMENTAL PROTECTION AGENCY
REGION IV
345 COURTLAND STREET, N.E.
ATLANTA, GEORGIA 30365

JAN 29 1991

4APT-AEB

Mr. Clair H. Fancy, P.E., Chief
Bureau of Air Regulation
Florida Department of Environmental
Regulation
Twin Towers Office Building
2600 Blair Stone Road
Tallahassee, Florida 32399-2400

RE: Container Corporation of America, Inc. (PSD-FL-165)

Dear Mr. Fancy:

This is to acknowledge receipt of your preliminary determination and draft permits for the proposed modification to the above referenced source dated December 20, 1990. It is our understanding that the public comment period for this action began on December 26, 1990.

As discussed between Mr. Tom Rogers of your staff and Mr. Lew Nagler of my staff, we do have concerns about the modelling performed. One of the areas of concern is the use of a SO_2 half-life in the modelling of the impacts on the Class I areas. It is our understanding that DER has requested that the applicant repeat the modelling with the scenarios of: a) no half-life; b) using a decay coefficient equivalent to a 12-hour half-life; and c) using a 4-hour half-life.

Our other major concerns are as follows:

1. In order to resolve a 24-hour sulfur dioxide modelling exceedence, it has been proposed that the mill's Number 5 Power Boiler stack be raised from 227 feet to 257 feet. Since the existing stack height is greater than 65 meters (de mimimis height in stack height regulations), the stack height cannot be raised, even if the new height is still below formula height, unless the exceedence is caused by excessive downwash. If such is the case and a demonstration is made to that effect, then the stack may be raised to GEP. Please see the final rule on the Stack Height Regulations, at 50 FR 27893 to 27899 (July 8, 1985), regarding what is required to demonstrate excessive downwash. Absent such a demonstration, the model must be performed utilizing the existing stack height.

2. The mill's contribution to the total 24-hour exceedence is above the de minimis level of 5 ug/m^3, thus causing or contributing to a violation of the NAAQS. In accordance with the requirement of 40 CFR §51.165(b), before a PSD

permit can be granted, the source must obtain sufficient emission reductions to offset its adverse ambient impact to below the significant impact level. In effect this means that mitigating actions must be included as a condition of the permit and such actions must take place prior to startup of the permitted unit. Please find enclosed a recent letter from EPA Region III to Virginia which describes EPA's policy in this situation.

Several minor concerns with the modelling are as follows:

1. There is no information in the report to indicate that other increment consuming sources were modelled for their impact on the two Class I areas. Any such increment consuming sources must be included in the analysis if they will have a joint impact on CCA.

2. Total cloud cover from the surface weather station was used in lieu of opaque cloud cover. An explanation of why total cloud cover was used should be included.

3. There was discussion of whether downwash should have been included in the analysis for Gilman Paper or ITT Rayonier Corporation, the two closest sources to CCA. This analysis should be included if appropriate.

Thank you for the opportunity to review and comment on this package. We apologize for not having our comments completed at an earlier date. If you have any questions, please contact Mr. Nagler at (404) 347-2904.

Sincerely yours,

Jewell A. Harper, Chief
Air Enforcement Branch
Air, Pesticides, and Toxics
Management Division

Enclosure

RECEIVED
JAN 29 1991
DER-BAQM

UNITED STATES ENVIRONMENTAL PROTECTION AGENCY - REGION IV
AIR, PESTICIDES AND TOXICS MANAGEMENT DIVISION
345 Courtland Street, N.E.
Atlanta, Georgia 30365
Fax Number: FTS 257-5207 or (404) 347-5207

FACSIMILE TRANSMISSION SHEET

DATE: 1/29/91 NUMBER OF PAGES (including this sheet) 3
(preparer must number all pages)

TO: Bruce Mitchell PHONE: (904) 488-1349

ADDRESS: EDER / BAR FAX NO. (904) 922-6979

FROM: GREGG WORLEY PHONE: (404) 347-2904

If the following pages are received poorly, please call _____
at FTS 257- _____ or (404) 347- _____

SPECIAL INSTRUCTIONS FOR RECEIVER: _____

KBN

1-30-91

January 26, 1991

Mr. Tom Rogers
Bureau of Air Monitoring and Assessment
Florida Department of Environmental Regulation
2600 Blair Stone Road
Tallahassee, FL 32399-2400

Re: Container Corporation of America
Proposed Batch Digester and Brown Stock Washer
AC45-190382; AC45-190383; PSD-FL-165

Dear Mr. Rogers:

Based on our recent telephone conversation, KBN has performed additional SO_2 modeling analysis for the Okefenokee PSD Class I area. All modeling was performed according to the same approach and methodology utilized in the previous analysis performed for the CCA project, with one exception. In the previous modeling submitted, an SO_2 half-life of 4 hours was used. In the additional modeling, two scenarios were evaluated; the first assumed no SO_2 half-life (i.e., no decay), and the second assumed a SO_2 half-life of 12 hours.

The results of the additional modeling are presented in the attached tables. Table 1 presents the PSD increment consumption results based on an SO_2 half-life of 0.0 hours (i.e., no half-life). As shown, the 24-hour SO_2 Class I increment is exceeded in three out of the five years modeled. Further review showed that there are only four predicted violations during these three years: one in 1983, two in 1984, and one in 1985. Note that the highest impact for each year is not a violation, and therefore was not analyzed further. Presented in Table 3 are the source contributions to the four predicted violations. As shown, CCA's contribution to three of the four violations is 0.0 or less, while the contribution to the fourth violation is only 0.0007 $\mu g/m^3$.

Presented in Table 2 are the Class I results based on a half-life of 12 hours, as was used in the PSD application for the St. Johns River Power Park. The results show that the predicted SO_2 increment consumption in the Class I area is less than the allowable increments for all averaging times.

Supportive computer model printouts and diskette are being supplied to you along with this letter report. After your review of this information, please call if you have any questions. I hope this information will satisfy the last remaining concern on this project, so that the permit can be issued.

David A. Buff

David A. Buff, M.E., P.E.
Principal Engineer

cc: Roger Hagan
Ron Caffo
Terry Cole
Roy Cobb
John Bunyak
Lew Nagler

KBN ENGINEERING AND APPLIED SCIENCES, INC.
1034 Northwest 57th Street Gainesville, Florida 32605 904/331-9000 FAX: 904/332-4189

90017A2/5

Table 1. Maximum Predicted SO_2[a] PSD Increment Consumption in the Okefenokee Class I Area

Averaging Time	Year	Concentration ($\mu g/m^3$)	Receptor Location Direction (°)	Receptor Location Distance (m)	Allowable PSD Increment ($\mu g/m^3$)
Annual					
	1983	0.09	261	67000	2
	1984	0.09	283	68100	
	1985	0.07	267	64316	
	1986	0.06	261	74200	
	1987	0.09	261	74200	
3-Hour[b]					
	1983	17.8	261	74200	25
	1984	20.2	266	65300	
	1985	19.3	267	64316	
	1986	18.4	271	66200	
	1987	17.6	283	68100	
24-Hour[b]					
	1983	5.22	267	64316	5
	1984	5.12	266	65300	
	1985	5.07	275	63699	
	1986	4.91	275	63699	
	1987	4.67	275	63699	

[a]No SO_2 decay assumed.
[b]Highest, second-highest concentrations presented.

Table 2. Maximum Predicted SO_2[a] PSD Increment Consumption in the Okefenokee Class I Area

Averaging Time	Year	Concentration ($\mu g/m^3$)	Receptor Location Direction (°)	Receptor Location Distance (m)	Allowable PSD Increment ($\mu g/m^3$)
Annual					
	1983	0.09	261	67000	2
	1984	0.08	283	68100	
	1985	0.07	267	64316	
	1986	0.06	261	74200	
	1987	0.08	261	74200	
3-Hour[b]					
	1983	15.7	261	67000	25
	1984	15.5	275	63699	
	1985	16.8	267	64316	
	1986	15.9	271	66200	
	1987	14.4	266	65300	
24-Hour[b]					
	1983	4.53	267	64316	5
	1984	4.41	267	64316	
	1985	4.24	275	63699	
	1986	4.17	275	63699	
	1987	4.19	275	63699	

[a]12-hour SO_2 half-life assumed.
[b]Highest, second-highest concentrations presented.

Table 3. Facility Contributions to SO_2 24-Hour PSD Class I Violations, 1983-1985

Facility	Day 213/83	Day 93/84	Day 366/84	Day 102/85
CAA	0.0	0.0	0.0	0.0007
Gilman Paper	0.0	0.0	0.0	0.22
JEA St. John	6.34	5.70	5.24	4.98
AES/Seminole Kraft	-1.12	-0.58	-0.21	-0.13
Others	0.0	0.0	0.0	0.0
Total	5.22	5.12	5.03	5.07

Florida Department of Environmental Regulation

Twin Towers Office Bldg. • 2600 Blair Stone Road • Tallahassee, Florida 32399-2400

~~Bob Martinez, Governor~~ Lawton Chiles - Governor

~~Dale Twachtmann, Secretary~~ ~~John Shearer, Assistant Secretary~~ Carol Browner - Secretary

FAX TRANSMITTAL LETTER

DATE: 1-25-91

TO:

NAME: Bud Rolofson

AGENCY: NPS - Air

TELEPHONE: 303-969-2822

OF PAGES (INCLUDE COVER SHEET): 2

FROM:

NAME: Bruce Mitchell

AGENCY: FDER / DARM / BAR

IF ANY PAGES ARE NOT CLEARLY RECEIVED, PLEASE CALL IMMEDIATELY. PHONE NO. 904-488-1344

SENDER'S NAME: Bruce Mitchell

COMMENTS: CCA comments from EGA

PSD-FL-165

MESSAGE CONFIRMATION JAN-25-'91 FRI 17:36

TERM ID: DIV OF AIR PES MGMT P-9999

TEL NO: 904-922-6979

NO.	DATE	ST. TIME	TOTAL TIME	ID	DEPT CODE	OK	NG
502	01-25	17:24	00°01'24	303 9692822		02	00

State of Florida
DEPARTMENT OF ENVIRONMENTAL REGULATION

For Routing To Other Than The Addressee	
To:	Location:
To	Location
To	Location
From:	Date:

Interoffice Memorandum

TO: File

FROM: Tom Rogers TR

DATE: January 25, 1991

SUBJECT: Container Corporation of America
DER File No. AC 45-190382, AC 45-190383
PSD-FL-165

On thursday, January 24, 1991, I spoke with Mr. Bud Rolofson of the U.S Park Service by phone about the preliminary determination of the subject permits. Mr. Rolofson relayed to me that the Park Service did not agree with the use of the 4-hour half life for SO2 in the air quality modeling for impacts on the Class I area. He further indicated that the use of any half-life was not acceptable to the Park Service. A written summary of the Park Service's comments on the preliminary determination will be sent in a few days.

KBN

RECEIVED

JAN 10 1991

DER - BAQM

January 9, 1991

Mr. Cleveland Holladay
Bureau of Air Management
Florida Department of Environmental Regulation
2600 Blair Stone Road
Tallahassee, FL 32399-2400

Dear Cleve:

Please find enclosed one hard copy of all computer printouts associated with Container Corporation of America's facility modifications. The printouts include title pages identifying each set of runs.

We have modified the output of our ISCST model to print the maximum concentration and location for the discrete receptors (for each applicable averaging time). The following lines of code were added to the code to make this improvement:

After line ISC32190, add the following 9 lines:

```
C  DO LOOP ADDED TO COMPUTE DISCRETE RECEPTOR MAXIMUM CONC.
      CONDISMX=0.0
      DO 720 JZ=1,NXWYPT
         IF(CON(NN+JZ) .GT. CONDISMX)THEN
             CONDISMX=CON(NN+JZ)
             XDISMX=XDIS(JZ)
             YDISMX=YDIS(JZ)
         ENDIF
720   CONTINUE
```

After line ISC32690, add the following line:

```
      WRITE(IO,9016) CONDISMX,XDISMX,YDISMX
```

It should be noted that these statements are similar to a routine used for the receptor grid receptors. The code modification was performed in the middle of this project. Therefore, not all of the printouts will have this improvement.

90017A2/3

KBN ENGINEERING AND APPLIED SCIENCES, INC.
1034 Northwest 57th Street Gainesville, Florida 32605 904/331-9000 FAX: 904/332-4189

Should you have any questions relating to the printouts or any of the modeling procedures, please don't hesitate to call me. Please call me with regard to the coding changes after your staff has had an opportunity to review them.

Sincerely yours,

Plattie Hunt for

Steven R. Marks
Senior Meteorologist

SRM/jda

Enclosure

cc: B. Mitchell
CHF/BA

OERTEL, HOFFMAN, FERNANDEZ & COLE, P.A.

ATTORNEYS AT LAW

SUZANNE BROWNLESS
M. CHRISTOPHER BRYANT
R. L. CALEEN, JR.
C. ANTHONY CLEVELAND
TERRY COLE
ROBERT C. DOWNIE, II
MARTHA J. EDENFIELD
SEGUNDO J. FERNANDEZ
KENNETH F. HOFFMAN
KENNETH G. OERTEL
HAROLD F. X. PURNELL
PATRICIA A. RENOVITCH
SCOTT SHIRLEY
THOMAS G. TOMASELLO
W. DAVID WATKINS

SUITE C
2700 BLAIR STONE ROAD
TALLAHASSEE, FLORIDA 32301

MAILING ADDRESS:
POST OFFICE BOX 6507
TALLAHASSEE, FLORIDA 32314-6507

TELEPHONE (904) 877-0099
FACSIMILE (904) 877-0981

JOHN H. MILLICAN
ENVIRONMENTAL CONSULTANT
(NOT A MEMBER OF THE FLORIDA BAR)

J. P. SUBRAMANI, PH. D., P. E.
ENVIRONMENTAL CONSULTANT
(NOT A MEMBER OF THE FLORIDA BAR)

RECEIVED
JAN 9 1991
DER - BAQM

January 9, 1991

BY HAND DELIVERY

Mr. Bruce Mitchell
Division of Air Resources Management
Department of Environmental Regulation
2600 Blair Stone Road
Tallahassee, Florida 32399-23400

Re: Permit Numbers AC-45-190382 and AC-~~45~~45-190383
PSD FL 165

Dear Mr. Mitchell:

A letter mailed to you yesterday referenced Container Corporation withdrawing its comments regarding creditable emissions reductions for No. 4 Power Boiler addressed Permit Numbers AC-45181406 and AC 45-181407. Those numbers were incorrect and the permit numbers to be referenced are listed above.

Thank you for all the coordination on this permit.

Sincerely,

Terry Cole

Terry Cole

TC/sj

xc: Mr. Roger Hagan
Mr. Bob Williams
A. Hutzpas
CHF/RA

bruce.ltr

File Copy

OERTEL, HOFFMAN, FERNANDEZ & COLE, P.A.

ATTORNEYS AT LAW

SUZANNE BROWNLESS
M. CHRISTOPHER BRYANT
R. L. CALEEN, JR.
C. ANTHONY CLEVELAND
TERRY COLE
ROBERT C. DOWNIE, II
MARTHA J. EDENFIELD
SEGUNDO J. FERNANDEZ
KENNETH F. HOFFMAN
KENNETH G. OERTEL
HAROLD F. X. PURNELL
PATRICIA A. RENOVITCH
SCOTT SHIRLEY
THOMAS G. TOMASELLO
W. DAVID WATKINS

SUITE C
2700 BLAIR STONE ROAD
TALLAHASSEE, FLORIDA 32301

MAILING ADDRESS:
POST OFFICE BOX 6507
TALLAHASSEE, FLORIDA 32314-6507

TELEPHONE (904) 877-0099
FACSIMILE (904) 877-0981

JOHN H. MILLICAN
ENVIRONMENTAL CONSULTANT
(NOT A MEMBER OF THE FLORIDA BAR)

J. P. SUBRAMANI, PH. D., P. E.
ENVIRONMENTAL CONSULTANT
(NOT A MEMBER OF THE FLORIDA BAR)

RECEIVED
JAN 9 1991
DER-BAQM

January 8, 1991

BY HAND DELIVERY

Mr. Bruce Mitchell
Division of Air Resources Management
Department of Environmental Regulation
2600 Blair Stone Road
Tallahassee, Florida 32399-2400

RE: Permit Numbers AC 45-181406 and AC 45-181407

Dear Mr. Mitchell:

Container Corporation withdraws its comments regarding creditable emissions reductions for No. 4 Power Boiler. Thank you for all the coordination on this permit.

Sincerely,

Terry Cole

Terry Cole

TC/kmp

cc: Mr. Roger Hagan
Mr. Bob Williams
Bruce Mitchell 1-9-91 PBM
BA/CHF
A. Kutzpa

File Copy

CONTAINER CORPORATION OF AMERICA

AN AFFILIATE OF JEFFERSON SMURFIT CORPORATION

Mill Division
NORTH 8TH STREET
P.O. BOX 2000
FERNANDINA BEACH, FL 32034
TELEPHONE: 904/261-5551

January 4, 1990

RECEIVED
JAN 4 1991
DER - BAQM

Mr. Clair H. Fancy
Chief, Bureau of Air Regulation
Department of Environmental Regulation
2600 Blair Stone Road
Tallahassee, FL 32399-2400

Re: Container Corporation of America Permits Nos. AC45-190382 and AC45-190383 - PSD-FL-165

Dear Mr. Fancy:

We appreciate the time and effort put in by you, Mr. Smallwood, Mr. Mitchell and the rest of your staff in reevaluating the Container Corporation application and issuing the Notice of Intent to Issue at such a busy time just before the holidays. The purpose of this letter is to provide comments on the draft permits and the accompanying Technical Evaluation and request several minor technical changes to clarify the permit language.

No. 8 Batch Digester System Permit

The first set of comments is directed to the specific conditions for the No. 8 Batch Digester System (BDS) and each number corresponds to the number in the draft permit.

3. We are not sure of the meaning or reason for this paragraph. We have no objection to stack testing the lime kiln, which incinerates the TRS gases from the digester. However, we are not sure of what additional requirements are imposed by this paragraph and request that it be clarified.

5. We believe this paragraph would be clearer if it was specified that the TRS incinerator in this case is the lime kiln.

13. This condition is unclear. We would like to meet with the Department to discuss the Department's intent and develop clarifying language.

14.b. We believe that an additional construction permit for the No. 5 power (bark) boiler is unnecessary. This permit requires modification to the No. 5 power boiler

and to its emission limit. This constitutes a federally enforceable condition since it is contained within this construction permit. We believe that it is neither necessary nor helpful to have to process yet another construction permit with its potential complications and delays. We have no objection to the other requirements, since they have been agreed to by Container.

15. Emission reductions are creditable for up to five years, even if the source has not operated for most of that five year period. The only question for determination by the Department is the representative emissions of that source. We believe that we provided documentation that the credit proposed for No. 4 power boiler was conservative and representative of actual emissions when operating. If a source could not get credit for emission reductions made more than two years ago, the period allowed for creditable emission reductions would not have been set at five years under the PSD rules of the Department or EPA. We would respectfully request that the Department reconsider its position on this matter. We would be glad to provide further authority for such a reevaluation at a meeting which we hope can be held to discuss these last remaining issues.

17. We would request that this paragraph be changed to leave out the requirement of submitting a complete application for operating permit within forty-five days after completion of compliance testing if it occurs earlier than the normal ninety day submittal prior to the expiration of the construction permit. We are not aware of any requirement in the rules that the application be submitted within forty-five days after completion of compliance testing. We usually require as much time as possible to complete the shakedown, testing, analysis and preparation of operation permit applications.

Brown Stock Washer System Permit

The comments on this draft permit are directed to the specific conditions and are numbered accordingly.

2. We request that use of a surrogate parameter be recognized by an additional sentence in this paragraph. This item also pertains to specific condition 8. We also request deletion of the 95% efficiency requirement since the source is subject to the NSPS limit of 5 ppm.

3. and 4. We request that these paragraphs be merged and have the same introductory language as the batch digester system. Such language has been agreed to by the Department on a number of permits and, as evidenced by the language in the batch digester permit, we believe reflects the actual intent of the Department.

5. The correct ton per year figure is 0.71 TPY.

14. The comments previously made for the same numbered paragraph on the digester system are incorporated for this paragraph.

15. The comments previously made for the same numbered paragraph on the digester system are incorporated for this paragraph.

17. The comments for the same numbered paragraph from the batch digester system are incorporated for this condition.

Technical Evaluation and Preliminary Determination Document

These comments are addressed to the technical aspects of the draft Technical Evaluation document. We have not commented on the regulatory aspects.

a. Article II, 6th paragraph. Cooking liquor sulfidity is controlled by several factors, including the addition of make-up chemicals, and would not increase as a result of removal of SO_2 of the lime mud.

b. Article III.A., 'Emission Limitations'. See our comment under Specific Condition 13 for the No. 8 batch digester system permit.

c. Article III.B.2. Preconstruction monitoring for beryllium and sulfuric acid mist is only required where the Department determines this is necessary to evaluate the air quality impacts of the new source. We believe no such monitoring is necessary and that the Department shares this view.

d. Article III.B.4., last paragraph of text. We understand that no modeling is required for beryllium and sulfuric acid mist.

Again we appreciate all of the effort that went into the review of the Container permit and in expediting the issuance of the Notice of Intent. We would like to schedule a meeting with you and your counsel the week of January 7, 1991, to discuss these concerns and hopefully resolve any remaining issues with you. We have authorized the additional modeling requested by the Department and that will be available by January 10, 1991, as requested. The Notice of Permit was run on December 26th in the local paper and a certified copy of that Notice has been provided to the Department.

Sincerely,

CONTAINER CORPORATION OF AMERICA

Roger C. Hagan

for Wayne Barlow
Vice President and General Manager

WSB\cfan.sj

xc: Steve Smallwood
Bruce Mitchell
Gary Smallridge
BA/CHF 1-9-91 RGH
A. Kutyna

UNITED STATES ENVIRONMENTAL PROTECTION AGENCY
REGION III
841 Chestnut Building
Philadelphia, Pennsylvania 19107

APRIL 1990

FEB 25 1990
RECEIVED
ENFORCEMENT DIVISION
ENVIRONMENTAL SECTION

Mr. John M. Daniel, Jr., P.E.
Assistant Executive Director
Department of Air Pollution Control
Room 801
Ninth Street Office Building
Richmond, VA 23240

Dear Mr. Daniel:

The purpose of this letter is to respond to your letters, dated February 6, 1990 and February 9, 1990, regarding the issuance of prevention of significant deterioration (PSD) permits in attainment areas where violations have been modeled. The enclosed attachment outlines the procedures that must be followed when issuing PSD permits in these areas.

If you have any questions, please do not hesitate to call me at (215) 597-9075.

Sincerely,

Marcia L. Spink, Chief
Air Programs Branch

Enclosure

cc: Wallace Davis, Executive Director
Virginia Department of Air Pollution Control
Richmond, VA

James Sydnor
Assistant Executive Director
Virginia Department of Air Pollution Control
Richmond, VA

RELATED MEMOS:

- AQ ANALYSIS FOR PSD — EMILSON → MASLANY (7/5/89)
- PSD PERMITTING IN AREAS VIOLATING NAAQS — GINSBURG → LILLIS (4/6/90)
- IDENTIFICATION OF NEW AREAS EXCEEDING NAAQS — CALCAGNI → LAXDAN (5/7/89)
- COMMENTS ON PROPOSED PROCEDURES... — LILLIS → SPINK (DRAFT 4/13/90)

Attachment

A. PROCEDURES FOR ISSUING PSD PERMITS TO SOURCES WITH NO SIGNIFICANT IMPACTS IN AREAS WITH MODELED VIOLATION(S) FROM EXISTING SOURCES

The source seeking the PSD permit may be permitted, constructed, and allowed to operate at its permitted, enforceable allowable emission rate because at that emission rate, the source has no significant impact. Although the State "owes" EPA a revision to its SIP to correct the modeled violation(s) from the existing source(s), that SIP revision and the issuance of the PSD permit are independent events. (Note: The existing sources are to be modeled in accordance with Table 9-1 of EPA's Guideline for Air Quality Models. Nothing in the WEPCO v. EPA case changes this requirement).

B. PROCEDURES FOR ISSUING PSD PERMITS TO SOURCES WITH SIGNIFICANT IMPACTS IN AREAS WITH MODELED VIOLATIONS FROM EXISTING SOURCES AND FOR PROCESSING THE ASSOCIATED SIP REVISIONS

1. The source seeking the PSD permit may accept permit conditions such that it, in and of itself, no longer has a significant impact.

OR

2a. Reductions or mitigating measures must be identified at existing sources such that modeling the PSD source and these existing sources indicates no significant impact(s).

2b. This identification of the reductions at existing sources and the modeling demonstrating no significant impact(s) must be done prior to and as part of the preliminary determination on the PSD application to afford the opportunity for public comment.

2c. The reductions or mitigating measures necessary at the existing sources must be made federally enforceable. Until and unless the State has an approved SIP operating permit program, the only means available for making the reductions at the existing sources federally enforceable is through source-specific SIP revisions. The State must formally commit to submit the necessary SIP revision(s) to EPA at the time it issues the preliminary determination.

2d. Those SIP revisions must be adopted by the State and approved by EPA prior to the time the PSD source commences operation. The State must follow all of the procedures for submittal of a SIP revision including public notice and hearing. The State could simultaneously offer public notice and hearing on the preliminary determination of the PSD permit and on the SIP revisions for the existing sources. The public notice must be explicit and a public hearing must be held because there are SIP revisions involved. (Public participation for PSD permits usually requires only the opportunity for public hearings.)

2e. The PSD permit must contain the following conditions:

1) Until and unless the (STATE) has imposed the necessary restrictions on (EXISTING SOURCE NAMES) to reflect the Scenario modeled as part of this permit review demonstrating no significant impact <u>and</u> those restrictions have been approved by the United States Environmental Protection Agency for incorporation into the approved SIP, the (PSD SOURCE NAME) may not commence operation except as conditioned below:

2) (Here conditions should be imposed on the source seeking the PSD permit such that it, in and of itself, would have no significant impact.)

NOTE: In the past, PM and SO_2 SIP revisions setting new SIP allowable emissions have required technical support consisting of full attainment demonstrations. In general, EPA expects that the SIP revisions submitted demonstrate no significant impact will also demonstrate no violations of NAAQS. However, there may be isolated cases where two rounds of SIP revisions occur. The first SIP revision would enforce the reductions necessary at existing sources to demonstrate no significant impact (when modeled with a source seeking a PSD permit). Where this SIP revision does not demonstrate protection of the NAAQS (i.e., the elimination of all predicted violations), the State still "owes" EPA a SIP revision to correct the modeled violations of the NAAQS and may have to once again redefine the allowable emissi[illegible] at one or more of the same sources affected in the previous S[illegible] evision. The commitment must also be made at the time the [illegible]ta issues its preliminary determination to issue the PSD perm[illegible]

UNITED STATES ENVIRONMENTAL PROTECTION AGENCY - REGION IV
AIR, PESTICIDES AND TOXICS MANAGEMENT DIVISION
345 Courtland Street, N.E.
Atlanta, Georgia 30365
Fax Number: FTS 257-5207 or (404) 347-5207

FACSIMILE TRANSMISSION SHEET

DATE: 1/28/91 NUMBER OF PAGES (including this sheet) 4
(preparer must number all pages)

TO: Bruce Mitchell PHONE: (904) 488-1344

ADDRESS: EDER / BAR FAX NO. (904) 922-6979

FROM: GREGG WORLEY PHONE: (404) 347-2904

If the following pages are received poorly, please call _____
at FTS 257- _____ or (404) 347- _____

SPECIAL INSTRUCTIONS FOR RECEIVER: _____

KBN

FACSIMILE COVER SHEET

RECEIVED
JAN 24 1991
DER BACM

DATE: 1-24-91

TO: Cleve Holladay

ORGANIZATION: DER

FAX NUMBER: 904-922-6979 TELEPHONE NUMBER: 904-488-1344

FROM: David A. Buff

TOTAL NUMBER OF PAGES: 4 (including cover page)

MESSAGE/INSTRUCTIONS:

PROJECT NUMBER: 90017 FAX OPERATOR: _____

(✓) This is the ONLY form of delivery of the transmitted document.

( ) The original of the transmitted document will be sent by:

( ) US Mail
( ) Overnight delivery
( ) Other: _____

Return original to Dottie

cc: Project File _____ yes ✓ no

KBN E[illegible]ng and Applied Sciences, Inc.
1034 [illegible] Street, Gainesville, FL 32605
Phone: [illegible]-9000 FAX (904) 332-4189

MAS/FAX

JACKSONVILLE ELECTRIC AUTHORITY
2 — 600 MW COAL-FIRED PLANTS

REVISED
PREVENTION OF SIGNIFICANT DETERIORATION REPORT
TO ENVIRONMENTAL PROTECTION AGENCY, REGION IV

MAY 1980

ENVIROSPHERE COMPANY
A DIVISION OF EBASCO SERVICES INCORPORATED
145 Technology Park/Atlanta
Norcross, Georgia 30092

5.0 ASSESSMENT OF AIR QUALITY IMPACT

5.1 MODELLING METHODOLOGY

5.1.1 Atmospheric Dispersion Models

The impact of emissions from the proposed plant on ambient air quality was determined using Envirosphere versions of several U.S. EPA dispersion models. These models are briefly described in the following paragraphs. The meteorological and emissions input to the models and the receptor grids utilized are described in subsequent sections.

The primary model utilized in the analysis was a modified version of the CRSTER model. CRSTER is the U.S. EPA model recommended for use on single point sources where there are no significant meteorological or terrain complexities (USEPA, 1978c). It is a straight-line, steady-state model which incorporates Gaussian diffusion concepts. It calculates ground-level concentrations for each receptor point for each hour of the year using hourly values of surface and upper air meteorological variables. The receptor point grid consists of a total of 180 points which occur at the intersection of 36 radial lines (every 10 degrees) and five user-specified distances from the source. The wind speed input is adjusted to speeds representative of the stack height where emissions first enter the atmosphere by application of stability-dependent power law relationship. The Briggs (1969) final plume rise formulae are used to calculate plume behavior. The vertical and horizontal dispersion coefficients are derived from Turner (1970) for seven atmospheric stability classes. The top of the mixing layer is treated as a reflecting boundary of the plume until, at some distance downwind, the surface layer is assumed to be uniformly mixed.

The version of CRSTER used for this analysis differs from the standard U.S. EPA version in three important respects. First, it allows the consideration of multiple point sources at their actual locations rather than at a single common location. Second, in response to a U.S. EPA request (Nagler, 1978), it allows for the calculation of "running" or overlapping three-hour averages. Concentrations for the 24-hour averaging time are still determined on a midnight-to-midnight basis, however, in keeping with U.S. EPA practice. Third, in accordance with [illegible] EPA Region IV (Nagler, 1979), [illegible] for consideration of pollutant transformation when computing concentrations at receptor points greater than 50 km from the source. In this case, a half-life of 12 hours was [illegible] for sulfur dioxide, the only pollutant for which transformation was considered.

The computer program produces tables of annual average concentrations predicted for each input receptor point as well as tables of the highest and second-highest concentrations for each receptor point for the 24-hour, three-hour, and one-hour averaging times. The second-highest ground-level concentrations during a given year of data are of prime importance because

Hegg, D., P.V. Hobbs, L.F. Radke, and H. Harrison, 1977. Ozone and Nitrogen Oxides in Power Plant Plumes. Proceedings of International Conference on Photochemical Oxidant Pollution and its Control. B. Dimitriades, Ed. EPA-600/3-77-001a,b. U.S. Environmental Protection Agency. Research Triangle Park, North Carolina.

Holzworth, G. C., 1972. Mixing Heights, Wind Speeds and Potential for Urban Air Pollution Throughout the Contiguous United States. U.S. Environmental Protection Agency. Publication No. AP-101. Research Triangle Park, North Carolina.

Holzworth, G.C., 1974. Meteorological Episodes of Slowest Dilution in Contiguous United States. Office of Research and Development. U.S. Environmental Protection Agency. Research Triangle Park, North Carolina.

Jacksonville Bio-Environmental Services Division, 1978. Annual Environmental Status Report. Jacksonville, Florida.

Jacksonville Bio-Environmental Services Division, 1980. Computer Listing of Available Ambient Air Quality Monitoring Results. Jacksonville, Florida.

Jacksonville Electric Authority, 1978. Prevention of Significant Deterioration Report to Environmental Protection Agency, Region IV. Prepared by Ebasco Services Incorporated. Norcross, Georgia.

Larsen, R.I., 1973. An Air Quality Data Analysis System for Interrelating Effects, Standards and Needed Source Reductions. Journal of the Air Pollution Control Association. Volume 23, P. 933-940.

Mitchell, J., March 11, 1980. Personal Communication, Georgia Department of Natural Resources. Atlanta, Georgia.

Mitchell, J., April 7, 1980a. Letter to Glenn Crow of Envirosphere. Georgia Department of Natural Resources. Atlanta, Georgia.

Nagler, L., October 4, 1978. Telephone Conversation with G.L. Crow of Envirosphere. U.S. Environmental Protection Agency, Region IV. Atlanta, Georgia.

Nagler, L., November 15, 1979. Meeting with Ebasco and Jacksonville Electric Authority Personnel. U.S. Environmental Protection Agency, Region IV. Atlanta, Georgia.

Neligan, R.E., January 23, 1978. Memorandum to D. Wagoner on Reactive VOC from Coal-Fired Power Plants. U.S. Environmental Protection Agency. Office of Air Quality Planning and Standards. Research Triangle Park, North Carolina.

Northeast Florida Regional Planning Council, 1979. Regional Socio-Economic Update. Jacksonville, Florida.