COMPLIANCE AND RELATIVE ACCURACY TESTS

UNIT CT1 AND UNIT CT2
DESOTO COUNTY ENERGY PARK
ARCADIA, FLORIDA

Date of Test: August 14, 18, and 19, 2007

Prepared for:

DeSoto County Energy Park
Arcadia, Florida

Prepared by:

TRC Environmental Corporation
5540 Centerview Drive, Suite 100
Raleigh, North Carolina 27606

TRC Project No. 153032.0000.0000

September 2007

5540 Centerview Drive
Suite 100
Raleigh, NC 27606

919.828.3150 PHONE
919.828.1977 FAX

www.TRCsolutions.com

RECEIVED
SEP 17 2007
BUREAU OF AIR REGULATION

September 10, 2007

Mr. Terry Syverson
DeSoto County Generating Company LLC
410 S. Wilmington Street
Raleigh, North Carolina 27602

Re: Turbine Compliance and RATA reports
TRC Project # 153032.0000.0000

Dear Mr. Syverson:

Enclosed are five (5) copies of the report covering the compliance and RATA testing conducted on the Turbines CT1 and CT2 at your facility. The testing was conducted on August 14, 18, and 19, 2007. TRC appreciates this opportunity to provide you with emissions testing services. If you have any questions regarding this report, please contact me at 919-604-7790 or cfink@trcsolutions.com.

Sincerely,

TRC ENVIRONMENTAL CORPORATION

Carl F. Fink, P.E.
Project Manager

Enclosure

COMPLIANCE AND RELATIVE ACCURACY TEST REPORT

TRC PROJECT NO:	153032.0000.0000
TEST DATES:	August 14, 18, and 19, 2007
TYPE OF TEST:	Compliance and Part 75 Relative Accuracy Test
TEST LOCATION:	CT1 and CT2 Stack
TEST SITE:	DeSoto County Energy Park 3800 NE Roan Street Arcadia, Florida
OPERATING PERMIT:	0270016-005-AV
PRIMARY ENERGY CONTACT:	Terry Syverson Test Program Coordinator 863-884-9604
TRC CONTACTS:	Leonard Brenner Gainesville, FL 352-378-0332
	Carl Fink Tampa, FL 919-604-7790

TABLE OF CONTENTS

SECTION		PAGE
1	INTRODUCTION	1-1
2	SUMMARY OF TEST RESULTS	2-1
3	SOURCE AND CEMS DESCRIPTION	3-1
	3.1 SOURCE DESCRIPTION	3-1
	3.2 OPERATING SCENARIOS	3-1
	3.3 SOURCE CEMS DESCRIPTION	3-1
	3.4 TEST LOCATION DESCRIPTION	3-1
4	SAMPLING AND ANALYTICAL PROCEDURES	4-1
	4.1 INSTRUMENTAL TESTING (CO, SO_2, O_2 and CO_2)	4-1
	4.1.1 Test Procedures	4-1
	4.1.2 Analyzer Descriptions	4-3
	4.2 NO_x - O_2 MONITORING SYSTEM RATA	4-5
	4.2.1 Relative Accuracy Test Audit (RATA)	4-5
	4.2.2 Bias Test	4-5
5	QA/QC PROCEDURES AND RESULTS	5-1
	5.1 CONTINUOUS EMISSION MONITORING SYSTEM QA/QC	5-1
	5.2 DATA REDUCTION AND VALIDATION	5-2

LIST OF TABLES AND FIGURES

TABLE	TITLE	PAGE
2-1	Summary of CT1-Natural Gas Compliance Testing	2-2
2-2	Summary of CT2-Natural Gas Compliance Testing	2-3
2-3	Summary of CT2-Fuel Oil Compliance Testing	2-4
2-4	Summary of Part 75 Relative Accuracy Test Results	2-5
3-1	Plant Desoto CEMS Monitors	3-2

FIGURE	TITLE	
3-1	Stack Test Location	3-3
4-1	Instrumental Reference Method Measurement System	4-6

LIST OF APPENDICES

APPENDIX A TEST RESULTS
1. Compliance
2. Part 75 RATA
3. Example Calculations

APPENDIX B QUALITY ASSURANCE ACTIVITIES
1. CT1-Natural Gas
2. CT2-Natural Gas
3. CT2-Fuel Oil

APPENDIX C LOGGED DATA RECORDS
1. CT1-Natural Gas
2. CT2-Natural Gas
3. CT2-Fuel Oil

APPENDIX D SOURCE CEMS TEST DATA
1. CT1-Natural Gas
2. CT2-Natural Gas

APPENDIX E OPACITY OBSERVATIONS

APPENDIX F FUEL ANALYSIS

APPENDIX G TURBINE OPERATIONAL DATA
1. CT1-Natural Gas
2. CT2-Natural Gas
3. CT2-Fuel Oil

APPENDIX H CALIBRATION DATA
1. Calibration Gas Certificates
2. Reference Method Analyzer Checks

SECTION 1
INTRODUCTION

DeSoto County Energy Park retained TRC Environmental Corporation (TRC) to conduct Compliance and Relative Accuracy testing on two combustion turbines at the Plant DeSoto Facility in Arcadia, Florida. The compliance test program objectives were to measure carbon monoxide (CO), Nitrogen Oxides (NOx), and Volatile Organic Carbon (VOC) emissions while the boilers were combusting both natural gas and fuel oil. The Part 75 RATA was to certify that the CEMS met the performance requirements of the Federal Acid Rain Program/NOx Emissions Provisions described in Title 40 of the Code of Federal Regulations, Parts 72 and 75. The relative accuracy testing was conducted according to the procedures of Performance Specifications 2 and 3 (40 CFR 60), and the continuous monitoring provisions of the EPA Acid Rain regulations.

Terry Syverson and Bob Renaud from Plant DeSoto coordinated the scheduling and data collection for the source. Emission tests were performed on August 14, 18, and 19, 2007, by Leonard Brenner, Chris Hank, Carl Fink, and Roger Osier from the TRC office in Gainesville, Florida.

A summary and discussion of the test results and emission rates is provided in Section 2. The source description, test procedures and quality assurance activities are described in the subsequent sections. All supporting field data and calibration records are provided in appendices.

SECTION 2
SUMMARY OF TEST RESULTS

Tables 2-1, 2-2, and 2-3 are summaries of the compliance test results. All calculated pound-per-hour (lb/hr) mass emission rates are based on flow rates calculated from the turbine heat inputs using EPA Method 19 procedures. The pound-per-million BTU (lb/mmBtu) emission rates were calculated according to the procedures of EPA Method 19, using the standard oxygen-based F factors. All natural gas compliance samples were collected during the 21-minute RATA runs, with the results from three consecutive RATA runs averaged for each compliance test run. More detailed compliance results tables are in Appendix A.

Table 2-4 provides a summary of the relative accuracy test results and applicable acceptance criteria for the CEMS installed on CT1 and CT2. Summaries of the comparative data used in calculating the relative accuracy results are in Appendix A. The source CEMS data can be found in Appendix D.

The source description, test procedures and quality assurance activities are described in the subsequent sections. All supporting field data, analytical reports, and calibration records are provided in appendices.

TABLE 2-1
SUMMARY OF COMPLIANCE TEST RESULTS – NATURAL GAS
PLANT DESOTO – UNIT CT1

Run	CT1-NG-1	CT1-NG-2	CT1-NG-3	Average	Permit Limit
Date	08/19/07	08/19/07	08/19/07		
Time	1221-1354	1409-1537	1552-1722		
Turbine Operation					
Generator Output, MW	151.2	151.2	151.7	151.4	
Barometric Pressure, " Hg	29.95	29.93	29.92	29.93	
Turbine Air Inlet Temp, F	92.0	91.6	91.6	91.7	
Relative Humidity	44.92	47.89	46.89	46.57	
Turbine Exhaust temp, F	1152.9	1152.7	1152.3	1152.6	
Turbine Fuel Data					
Fuel heating Value, Btu/scf	1031.0	1031.0	1031.0	1031.0	
F-Factor, O_2 based	8710	8710	8710	8710	
Gas Fuel Flow, kSCFH	1575.83	1576.73	1578.91	1577.16	
Heat Input, mmBtu/hr	1624.7	1625.6	1627.9	1626.0	
Ambient data Data					
Humidity, lb moisture/lb air	0.0173	0.0171	0.0171	0.0172	
Measured Emissions					
NOx, ppm dry @ 15%O_2	8.4	8.3	8.4	8.4	9
CO, ppm dry @ 15%O_2	0.61	0.54	.066	0.60	*12*
VOC, ppm dry @ 15%O_2	0.65	0.23	0.00	0.29	*1.7*
VE, % opacity			0	0	*10*
O_2, % vol	13.74	13.73	13.74	13.74	
CO_2, % vol	4.21	4.23	4.24	4.23	
Calculated Emission Rates					
NOx, lb/hr	51.3	50.5	51.1	51.0	*64.1 ISO*
CO, lb/hr	2.26	2.01	2.46	2.24	*42.5 ISO*
VOC, lb/hr	1.39	0.49	0.00	0.63	*2.8 ISO*

TABLE 2-2
SUMMARY OF COMPLIANCE TEST RESULTS – NATURAL GAS
PLANT DESOTO – UNIT CT2

Run	CT2-NG-1	CT2-NG-2	CT2-NG-3	Average	Permit Limit
Date	08/18/07	08/18/07	08/18/07		
Time	1230-1413	1428-1559	1614-1749		
Turbine Operation					
Generator Output, MW	156.4	156.4	157.4	156.7	
Barometric Pressure, " Hg	29.86	29.83	29.82	29.84	
Turbine Air Inlet Temp, F	90.1	89.8	89.0	89.6	
Relative Humidity	45.12	45.04	45.40	45.19	
Turbine Exhaust temp, F	1143.2	1142.8	1141.5	1142.5	
Turbine Fuel Data					
Fuel heating Value, Btu/scf	1031.0	1031.0	1031.0	1031.0	
F-Factor, O_2 based	8710	8710	8710	8710	
Gas Fuel Flow, kSCFH	1617.15	1617.21	1622.30	1618.89	
Heat Input, mmBtu/hr	1667.3	1667.3	1672.6	1669.4	
Ambient data Data					
Humidity, lb moisture/lb air	0.0162	0.0155	0.0154	0.0157	
Measured Emissions					
NOx, ppm dry @ 15%O_2	8.8	8.9	8.8	8.8	9
CO, ppm dry @ 15%O_2	.77	.77	.72	.75	*12*
VOC, ppm dry @ 15%O_2	0.00	0.00	0.13	0.04	*1.7*
VE, % opacity			0	0	*10*
O_2, % vol	13.69	13.68	13.66	13.68	
CO_2, % vol	4.25	4.24	4.25	4.25	
Calculated Emission Rates					
NOx, lb/hr	55.1	55.4	55.5	55.3	*64.1 ISO*
CO, lb/hr	2.93	2.92	2.76	2.87	*42.5 ISO*
VOC, lb/hr	0.00	0.00	0.29	0.10	*2.8 ISO*

TABLE 2-3
SUMMARY OF COMPLIANCE TEST RESULTS – FUEL OIL
PLANT DESOTO – UNIT CT2

Run	CT2-FO-1	CT2-FO-2	CT2-FO-3	Average	Permit Limit
Date	08/14/07	08/14/07	08/14/07		
Time	1330-1451	1513-1640	1655-1810		
Turbine Operation					
Generator Output, MW	167.24	167.33	167.12	167.23	
Barometric Pressure, " Hg	29.73	29.71	29.71	29.72	
Turbine Air Inlet Temp, F	84.15	86.21	84.66	85.01	
Relative Humidity	71.15	62.45	62.03	65.21	
Turbine Exhaust Temp, F	1132.76	1133.43	1134.44	1133.54	
Water Injection Rate, lb/sec	30.770	31.151	31.221	31.047	
Water-to-Fuel Ratio	1.198	1.212	1.219	1.210	
Turbine Fuel Data					
Fuel heating Value, Btu/lb	19,486	19,486	19,486	19,486	
F-Factor, O_2 based	9190	9190	9190	9190	
Fuel Flow, gal/min	215.899	216.012	215.182	215.698	
Heat Input, mmBtu/hr	1802.28	1803.23	1796.30	1800.60	
Ambient data Data					
Humidity, lb moisture/lb air	0.0210	0.0198	0.0179	0.0196	
Measured Emissions					
NOx, ppm dry @ 15%O_2	37.8	37.8	37.1	37.6	42
CO, ppm dry @ 15%O_2	1.4	1.38	1.07	1.29	*20*
VOC, ppm dry @ 15%O_2	0.29	0.86	0.60	0.58	*7*
O_2, % vol	12.40	12.40	12.38	12.39	
CO_2, % vol	6.44	6.41	6.44	6.43	
Calculated Emission Rates					
NOx, lb/hr	264.8	264.8	259.2	262.9	*351 ISO*
CO, lb/hr	5.98	5.90	4.56	5.48	*71.4 ISO*
VOC, lb/hr	0.71	2.1	1.5	1.42	*16.2 ISO*

TABLE 2-4
SUMMARY OF PART 75 RELATIVE ACCURACY TEST RESULTS
PLANT DESOTO

Monitor	Specification Test	Result	Specification
		UNIT CT1	
$NOx-O_2$	Relative Accuracy	3.24 %	≤ 7.5 % for annual testing
(lb/mmBtu)	Bias	1.033	mean diff of RATA data ≤ confidence coeff.
		UNIT CT2	
$NOx-O_2$	Relative Accuracy	3.23 %	≤ 7.5 % for annual testing
(lb/mmBtu)	Bias	1.021	mean diff of RATA data ≤ confidence coeff.

SECTION 3
SOURCE AND CEMS DESCRIPTION

3.1 SOURCE DESCRIPTION

The Plant DeSoto facility consists of two, dual-fuel, nominal 170 MW General Electric Model PG7241FA combustion turbine-electrical generators with inlet foggers, two 75-foot exhaust stacks, and one 1.5-million gallon fuel oil storage tank... The combustion turbines can operate in simple cycle mode and intermittent duty mode. The units are equipped with Dry Low NOx (DLN-2.6) combustors and wet injection capability.

3.2 OPERATING SCENARIOS

Fuel oil compliance testing was conducted on Turbine CT2 at full load. Natural gas compliance and RATA tests were conducted on both CT1 and CT2 at full load.

3.3 SOURCE CEMS DESCRIPTION

The Unit 1 and Unit 2 stacks are equipped with dry extractive Spectrum System CEMS, housed in an environmentally controlled shelter at the base of each stack. The type, serial number, and sampling range of each monitor is presented in **Table 3-1**.

3.4 TEST LOCATION DESCRIPTION

The test location for each stack consisted of four test ports on a vertical stack. All four ports were used for the fuel oil testing. After conducting stratification tests with all four ports for the natural gas testing, a single port was used for the actual test runs. A diagram of the test location is shown in **Figure 3-1**.

TABLE 3-1
DESOTO ENERGY PARK CEMS MONITORS

Parameter	Manufacturer	Model	Serial Number	Part 75 Measurement Span
Unit CT1				
NOx	Thermo Environmental	42C	42CHL-71720-369	20/200 ppm,
O2	Servomex	1400	1420/3170	22.0 %
Unit CT2				
NOx	Thermo Environmental	42C	42CHL-71726-369	20/200 ppm,
O2	Servomex	1400	1420/3133	22.0 %

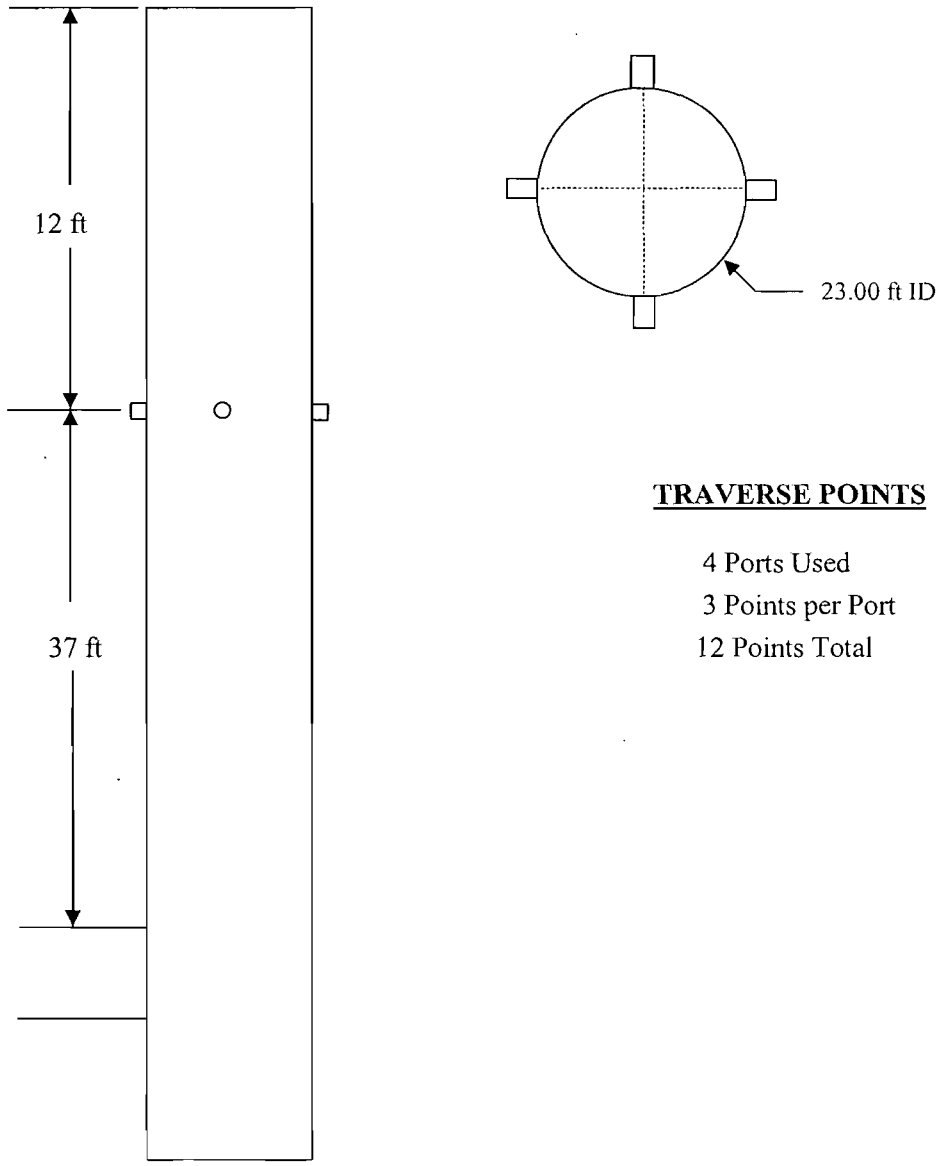

CT1 AND CT2 STACKS IDENTICAL

FIGURE 3-1. STACK TEST LOCATION – PLANT DESOTO

SECTION 4
SAMPLING AND ANALYTICAL PROCEDURES

All sampling and analytical procedures used in this test program were based on procedures in 40 CFR 75, Appendix B and 40 CFR 60, Appendix A and Appendix B, published by the Environmental Protection Agency (EPA). Copies of these methods are available from the EPA EMC electronic bulletin board or the Code of Federal Regulations.

The TRC test team used the following EPA Reference Methods:

Method 1	Sample and Velocity Traverse Point Locations
Method 3A	Determination of Oxygen and Carbon Dioxide from Stationary Sources (Instrumental Analyzer Procedure)
Method 7E	Determination of Nitrogen Oxides Emissions from Stationary Sources (Instrumental Analyzer Procedure)
Method 10	Determination of Carbon Monoxide Emissions from Stationary Sources
Method 19	Determination of Sulfur Dioxide Removal Efficiency and Particulate, Sulfur Dioxide, and Nitrogen Oxides Emissions Rates
Method 25A	Determination of Volatile Organic Compound Emissions from Stationary Sources

4.1 INSTRUMENTAL TESTING (NOx, CO, VOC, O_2, and CO_2)

The instrumental analyzer testing for both RATA and compliance was conducted according to the procedures of EPA Methods 3A, 7E, 10, and 25A. The following subsections describe the continuous emission monitoring system TRC used to perform the testing.

4.1.1 Test Procedures

A stratification test was conducted either prior to or concurrent with the first test run at each location. Twelve Method 1 points were sampled for twice the system response time and the maximum deviation of each point from the average concentration was calculated. The number of test points was based on the stratification test results.

The CT2 fuel oil compliance testing was conducted at twelve points during each test run. The CT1 compliance and RATA testing was conducted at three points during each run and the CT2 natural gas compliance and RATA testing was conducted at a single point.

The sample collection system consisted of a heated stainless steel probe with a heated particulate filter, heated sample lines, a moisture removal trap, and a sample pump. All samples were routed through a distribution manifold board for delivery to the analyzers. The gas sample was distributed to the individual gas analyzers at near atmospheric pressure and excess sample flow from the system was vented outside the trailer.

The gas sample exits the probe through a heated sample line and goes to a moisture removal condenser designed to minimize contact between the sample and the condensate, which is continuously removed with a condensate discharge pump. The sample exiting the condenser was transported through unheated sample line by a Teflon-lined sample pump to the flow distribution manifold board, where the flow to the analyzers was monitored and controlled. The sample line to the VOC analyzer bypassed the condenser and the sample was heated up to the analyzer inlet.

A second sample line delivered calibration gases from the control panel inside the trailer to the exit of the probe. The configuration of the sampling system allows for the injection of calibration gases directly to the analyzers or through the complete sampling system. All pretest and posttest calibration procedures were performed as outlined in the specific EPA methods. **Figure 4-1** is a diagram of the instrumental monitoring system.

The gas analyzers were calibrated before use with an internal (direct-to-instrument) calibration to check analyzer linearity. Before each run, an external (through-the-entire-system) calibration was performed to check system bias at the zero and span points. Calibrations at the conclusion of each run consisted of system bias checks. The reported results for each parameter were corrected using the bias and drift check results and the equations in EPA Method 7E. These calculations were performed by the DAS software and in a separate excel spreadsheet.

The continuous gas analyzers were housed in a temperature-controlled transportable laboratory. The analyzer outputs were sent to a PC-based data acquisition system (DAS), which automatically calculated and recorded the average one-minute response from each analyzer during testing. The raw test run averages and bias corrected values were then automatically calculated by the DAS. The following section describes the analyzers that were used for the testing.

4.1.2 Analyzer Descriptions

Oxygen. A Servomex Model 1440, or similar, was used to determine the concentration of O_2 in the flue gas stream. This instrument utilizes a paramagnetic transducer that measures the O_2 from the atmosphere surrounding the measuring probe. The consumption of O_2 generates a proportional electrical current. This current is then amplified and provides a signal output, which corresponds to a full-scale measurement range of zero (0) to 25 percent O_2.

Carbon Dioxide. A Servomex Model 1440 non-dispersive infrared (NDIR) analyzer, or similar, was used to continuously monitor the CO_2 concentration in the flue gas stream. The theory of operation of this analyzer is based on the principle that CO_2 gas has a unique absorption line spectrum in the infrared region. The instrument consists of an infrared light source, a chopper, a measuring cell, and a detector. The infrared light beam emitted by the source passes through a measuring cell filled with continuously flowing gas sample. The light beam is partially absorbed or attenuated by the gas species of interest in this cell before reaching the front chamber of the detector. Both the front and rear chambers of the sealed detector are filled with a reference gas. The difference in the amount of light absorbed between the front and rear chambers is dependent on the concentration of the gas species of interest within the sample measuring cell creating a pressure differential between the two chambers. This pressure difference is then observed as gas flow by the micro-flow sensor located in a channel communicating the two chambers. The resulting AC signal from the micro-flow sensor is rectified, amplified, and linearized into a DC voltage signal for output. The analyzer full-scale measurement is zero (0) to 20 percent for CO_2. Analyzer calibration error checks were conducted using NIST traceable EPA Protocol 1 calibration gases before initiating any testing.

Carbon Monoxide. A Thermo Environmental Model 48C Gas Filter Correlation (GFC) analyzer was used to continuously sample the carbon monoxide (CO) concentrations in the gas stream. GFC spectroscopy is based on the comparison of the infrared (IR) absorption spectrum of the measured gas to that of other gases in the sample being analyzed. This technique implemented by using a high concentration sample of the measured gas (i.e., CO) as a filter for the infrared radiation transmitted through the analyzer. Radiation from an IR source is chopped and passed through a gas filter alternating between CO and N_2 due to rotation of the filter wheel. The radiation then passes through an interference filter and on to an absorption cell. The IR radiation then exits the sample cell and falls on to an IR detector.

The CO gas filter produces a reference beam that cannot be further attenuated by CO in the sample cell. The N_2 side of the filter wheel is transparent to the IR radiation and thus produces a measure beam that is partially absorbed by CO in the cell. The chopped detector signal is modulated by the alternation between the two gas filters with an amplitude related to the concentration of CO in the sample cell. Other gases,

which absorb the reference and measure beams equally, do not cause modulation of the detector signal leaving the GFC responding specifically to CO.

NO_x Analyzer. A TECO Model 42C, or similar, NO/ NO_2/NO_x analyzer was used for the NO_x monitoring. The analyzer automatically and continuously determined the nitrogen oxides (NO_x) concentration in the exhaust gas using the principle of chemiluminescence.
In the determination of NO_x, the gas sample is first routed through a converter, where any NO_2 in the sample is disassociated to form NO. The converted sample is quantitatively converted to NO_2 by gas phase oxidation with molecular ozone produced within the analyzer. In this reaction, the nitrogen dioxide (NO_2) molecules are elevated to an electronically excited state, and then immediately reverted to a non-excited ground state. This reversion is accompanied by emission of photons, which impinge on a photomultiplier detector, and generate a low level DC current. The current is then amplified and used to drive a front panel meter and a data recorder. The NO_x concentration detected by the instrument includes the contributions of both the NO in the sample and the NO resulting from the dissociation of the in the sample.

VOC Analyzer. A California Analytical Model 300-HMFID CE flame ionization analyzer was used to measure VOC (total hydrocarbon) emissions. The theory of operation is based on the principle of flame ionization detection. In the flame ionization detector, hydrogen is mixed with the sample gas and is burned in a small jet. The ionization current in the hydrogen flame is measured. In a pure hydrogen flame, very few ions are produced, but if an organic component or hydrocarbon is burned in the flame, the ion current is greatly increased. The current is converted to a voltage output and provides a quantitative measure of the amount of hydrocarbons in the flame. The hydrogen flame ionization detector is extremely sensitive and is capable of detecting hydrocarbon levels in the low parts per million range and is insensitive to inorganic gases such as nitrogen, carbon dioxide, and water vapor.

The analyzer was calibrated with EPA Protocol cylinders of methane in air. The VOC concentrations were measured as ppm methane on a wet basis. Moisture values from stoichiometric calculations were used to convert the results to a dry basis.

Data Acquisition System. The DAS is a PC-based system with hard disk storage and an external 8-channel analog-to-digital converter. In addition to providing an instantaneous display of analyzer responses, the DAS compiles and averages the analyzer data collected once each second and documents analyzer calibrations. Data for the test period were averaged and corrected for calibration error and drift using the DAS software and a Microsoft Excel spreadsheet program.

4.2 NO_X -O_2 MONITORING SYSTEM RATA

4.2.1 Relative Accuracy Test Audit (RATA)

The Part 75 relative accuracy test was of the NO_x - O_2 monitoring system in units of lb/mmBtu. The RATA was conducted while the unit was combusting natural gas and was operating at the normal load level. At least nine sets of paired monitoring system and reference method test data were collected for the RATA. If more than nine sets of tests were conducted, then a maximum of three sets could be rejected as long as the total number used was at least nine. The NO_x- O_2 Part 75 results were calculated in units of lb/mmBtu using the NO_x and O_2 dry basis concentrations, the Fd_c factor of 8710 for natural gas, and equations from EPA Method 19 (40 CFR 60, Appendix A). The relative accuracy results were calculated using the equations of 40 CFR 75, Appendix A.

4.2.2 Bias Test

Each Part 75 relative accuracy data set was tested for bias by comparing the arithmetic mean of the difference between the paired data points to the absolute value of the RATA confidence coefficient. If the mean difference was less than or equal to the absolute value of the confidence coefficient, the monitoring system passed the bias test. If the mean difference was greater than the absolute value of the confidence coefficient, the monitoring system failed the bias test. If the system failed the bias test, a bias adjustment factor was calculated from the data set.

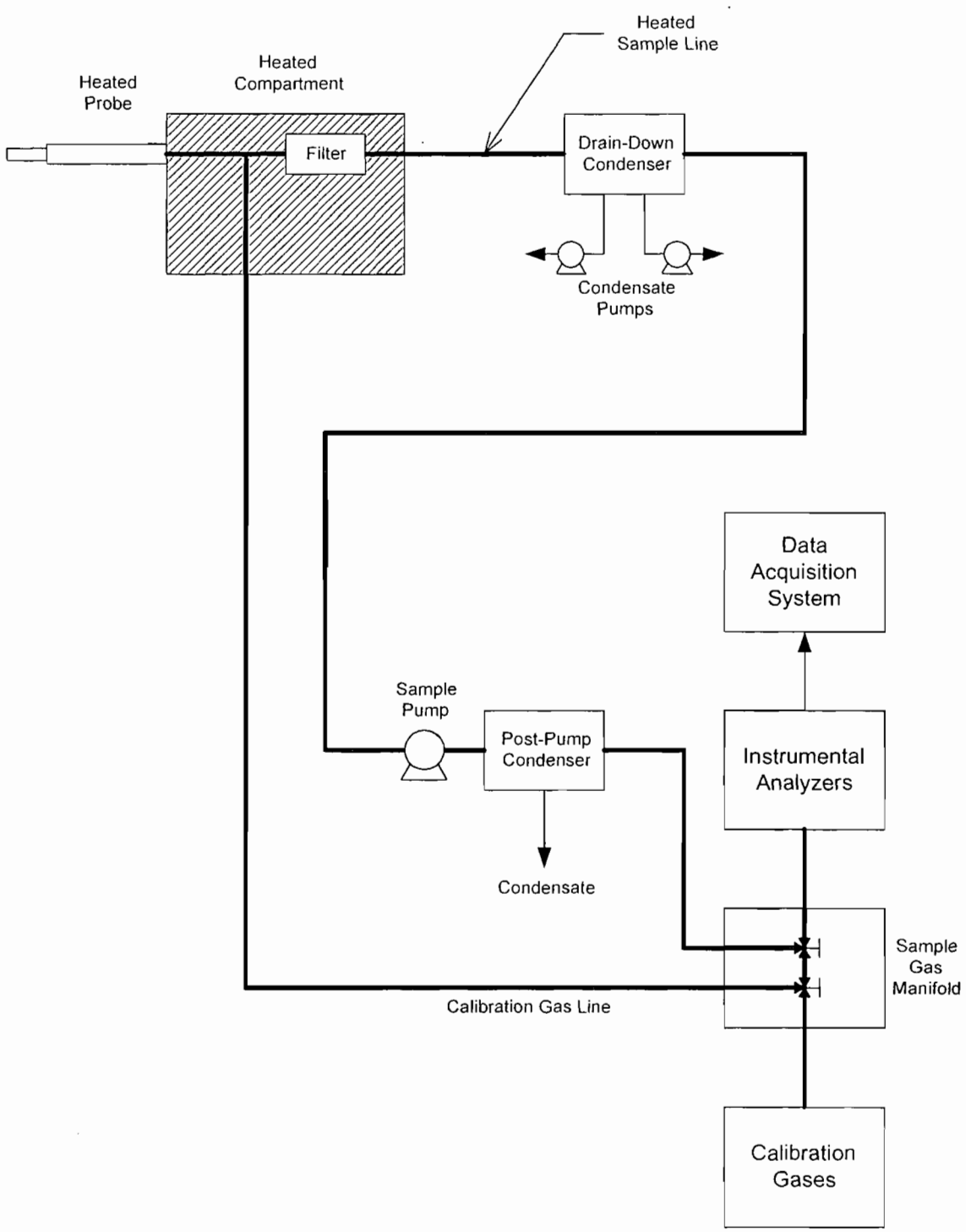

FIGURE 4-1. INSTRUMENTAL REFERENCE METHOD MEASUREMENT SYSTEM

SECTION 5
QA/QC PROCEDURES AND RESULTS

The objective of a QA/QC program is to assure that the precision and accuracy of all data generated is scientifically sound and documented to be "in control". To accomplish this, standardized methods or procedures were used. They must be validated for their intended use, rigorously followed, and data reported with quality indicators (precision, accuracy, completeness, representativeness, etc.).

As a guide, TRC uses the EPA document *Quality Assurance Handbook for Air Pollution Measurement System*, Volume III (EPA-600/4-77-027b). TRC's QA/QC plan has incorporated certain considerations to the production of quality data in all of its sampling work regardless of the scope and purpose of the testing. These considerations include:

- Planning the testing program;
- Using reliable and well-maintained equipment;
- Using appropriate forms for recording sampling data;
- Using calibration and audit gases traceable to the National Institute of Standards and Technology (NIST);
- Controlling errors by checking data inputs and performing redundant calculations;
- Adhering to established protocol.

5.1 CONTINUOUS EMISSION MONITORING SYSTEM QA/QC

The CEMS was calibrated in accordance with the specific test methods referenced in Section 4. In general, the QA/QC measures included the use of NIST traceable calibration gases, pre and post-test run calibrations, calibration error and bias tests. Copies of the certifications for the calibration gas standards are included in Appendix E. Copies of the CEMS system bias check and calibration error test are included with the instrumental reference method data in Appendix B. Copies of each test post run bias check, along with the corrected test run averages, are included with each individual run in those appendices. A copy of the NO_2 to NO converter efficiency for the NO_x analyzer is included in Appendix E.

5.3 DATA REDUCTION AND VALIDATION

The data collected in the field were recorded on standardized data sheets or printed directly from the Reference CEMS system. The Field Team Leader reviewed the collected data in the field and made note of any discrepancies or errors. TRC CEMS Supervisors and/or QC Coordinator validated the field data based on the test protocol and the standard operating procedures for each method. They also checked the calculation spreadsheets for correct data entry and calculation equations.

APPENDIX A
TEST RESULTS

1. Compliance
2. Part 75 RATA
3. Example Calculations

A-1
Compliance

Summary of Results
Unit CT1 Compliance Testing - Natural Gas

Company: DeSoto Generating Company, LLC
Plant: DeSoto County Energy Park
Location: Arcadia, DeSoto County, Florida
Technicians: CFF, RPO
Source: Unit 1, a General Electric Frame 7FA Combustion Turbine Generator Set

Test Number	**U1-NG-1**	**U1-NG-2**	**U1-NG-3**		
Date	8/19/2007	8/19/2007	8/19/2007		
Start Time (CEMS Time)	12:21	14:09	15:52		**FDEP**
Stop Time (CEMS Time)	13:54	15:37	17:22		**Permit**
Power Turbine Operation				***Averages***	**Limits**
Generator Output (MW, CT generated power)	151.2	151.2	151.7	***151.4***	
Barometric Pressure ("Hg)	29.95	29.93	29.92	***29.93***	
Air Inlet Duct Losses ("H_2O)	3.42	3.52	3.53	***3.49***	
Turbine Air Inlet Temperature (°F)	92.0	91.6	91.6	***91.7***	
Dewpoint Temperature (°F)	67.70	69.40	69.09	***68.73***	
Relative Humidity (% RH)	44.92	47.89	46.89	***46.57***	
Turbine Exhaust Temperature (°F)	1152.9	1152.7	1152.3	***1152.6***	
Turbine Fuel Data (Natural Gas)					
Fuel Heating Value (Btu/SCF, Gross)	1031.0	1031.0	1031.0	***1031.0***	
Fuel Specific Gravity	0.5850	0.5850	0.5850	***0.5850***	
O_2 "F_d Factor" (DSCFex/MMBtu @ 0% excess air)	8710	8710	8710	***8710***	
Turbine Gas Fuel Flow (kSCFH)	1575.83	1576.73	1578.91	***1577.16***	
Heat Input (MMBtu/hr, Higher Heating Value)	1624.7	1625.6	1627.9	***1626.0***	
Ambient Conditions					
Atmospheric Pressure ("Hg)	29.97	29.95	29.94	***29.95***	
Temperature (°F): Dry Bulb	94.0	95.0	95.0	***94.7***	
(°F): Wet Bulb	79.0	79.0	79.0	***79.0***	
Humidity (lbs moisture/lb of air)	0.0173	0.0171	0.0171	***0.0172***	
Measured Emissions					
NO_X (ppmv, dry basis)	10.21	10.06	10.15	***10.14***	
NO_X (ppmv, dry @ 15% excess O_2)	**8.4**	**8.3**	**8.4**	***8.4***	**9**
CO (ppmv, dry basis)	0.74	0.66	0.80	***0.73***	
CO (ppmv, dry @ 15% excess O_2)	**0.61**	**0.54**	**0.66**	***0.60***	**12**
THC as VOC (ppmv, wet as Methane)	0.72	0.25	0.00	***0.32***	
VOC (ppmv, dry @ 15% excess O_2)	**0.65**	**0.23**	**0.00**	***0.29***	**1.7**
VE (% opacity)			**0**	***0***	**10**
O_2 (% volume, dry basis)	13.74	13.73	13.74	***13.74***	
CO_2 (% volume, dry basis)	4.21	4.23	4.24	***4.23***	
F_o (fuel factor, range = 1.600-1.836 for NG)	1.70	1.70	1.69	***1.69***	
H_2O (% volume, stoichiometric)	9.23	9.20	9.19	***9.21***	
Stack Volumetric Flow Rates (via EPA Method 19)					
via O_2 "F_d Factor" (SCFH, dry basis)	4.21E+07	4.20E+07	4.22E+07	***4.21E+07***	
Calculated Emission Rates (via M-19 O_2 or CO_2 "F-factor")					
NO_X (lbs/hr)	**51.3**	**50.5**	**51.1**	***51.0***	**64.1 ISO**
CO (lbs/hr)	**2.26**	**2.01**	**2.46**	***2.24***	**42.5 ISO**
VOC (lbs/hr)	**1.39**	**0.49**	**0.00**	***0.63***	**2.8 ISO**

Summary of Results
Unit CT2 Compliance Testing - Natural Gas

Company: DeSoto Generating Company, LLC
Plant: DeSoto County Energy Park
Location: Arcadia, DeSoto County, Florida
Technicians: CFF, RPO
Source: Unit 2, a General Electric Frame 7FA Combustion Turbine Generator Set

Test Number	**U2-NG-1**	**U2-NG-2**	**U2-NG-3**		
Date	8/18/2007	8/18/2007	8/18/2007		
Start Time (CEMS Time)	12:30	14:28	16:14		**FDEP**
Stop Time (CEMS Time)	14:13	15:59	17:49		**Permit**
Power Turbine Operation				*Averages*	**Limits**
Generator Output (MW, CT generated power)	156.4	156.4	157.4	*156.7*	
Barometric Pressure ("Hg)	29.86	29.83	29.82	*29.84*	
Air Inlet Duct Losses ("H_2O)	3.05	3.05	3.07	*3.06*	
Turbine Air Inlet Temperature (°F)	90.1	89.8	89.0	*89.6*	
Dewpoint Temperature (°F)	66.51	65.97	65.05	*65.84*	
Relative Humidity (% RH)	45.12	45.04	45.40	*45.19*	
Turbine Exhaust Temperature (°F)	1143.2	1142.8	1141.5	*1142.5*	
Turbine Fuel Data (Natural Gas)					
Fuel Heating Value (Btu/SCF, Gross)	1031.0	1031.0	1031.0	*1031.0*	
Fuel Specific Gravity	0.5850	0.5850	0.5850	*0.5850*	
O_2 "F_d Factor" (DSCFex/MMBtu @ 0% excess air)	8710	8710	8710	*8710*	
Turbine Gas Fuel Flow (kSCFH)	1617.15	1617.21	1622.30	*1618.89*	
Heat Input (MMBtu/hr, Higher Heating Value)	1667.3	1667.3	1672.6	*1669.1*	
Ambient Conditions					
Atmospheric Pressure ("Hg)	29.96	29.94	29.94	*29.95*	
Temperature (°F): Dry Bulb	91.0	94.0	91.0	*92.0*	
(°F): Wet Bulb	77.0	77.0	76.0	*76.7*	
Humidity (lbs moisture/lb of air)	0.0162	0.0155	0.0154	*0.0157*	
Measured Emissions					
NO_X (ppmv, dry basis)	10.77	10.84	10.85	*10.82*	
NO_X (ppmv, dry @ 15% excess O_2)	**8.8**	**8.9**	**8.8**	*8.8*	9
CO (ppmv, dry basis)	0.94	0.94	0.89	*0.92*	
CO (ppmv, dry @ 15% excess O_2)	**0.77**	**0.77**	**0.72**	*0.75*	12
THC as VOC (ppmv, wet as Methane)	0.00	0.00	0.15	*0.05*	
VOC (ppmv, dry @ 15% excess O_2)	**0.00**	**0.00**	**0.13**	*0.04*	1.7
VE (% opacity)			**0**	*0*	10
O_2 (% volume, dry basis)	13.69	13.68	13.66	*13.68*	
CO_2 (% volume, dry basis)	4.25	4.24	4.25	*4.25*	
F_o (fuel factor, range = 1.600-1.836 for NG)	1.70	1.70	1.70	*1.70*	
H_2O (% volume, stoichiometric)	9.10	8.99	8.99	*9.03*	
Stack Volumetric Flow Rates (via EPA Method 19)					
via O_2 "F_d Factor" (SCFH, dry basis)	4.29E+07	4.28E+07	4.28E+07	*4.28E+07*	
Calculated Emission Rates (via M-19 O_2 or CO_2 "F-factor")					
NO_X (lbs/hr)	**55.1**	**55.4**	**55.5**	*55.3*	**64.1 ISO**
CO (lbs/hr)	**2.93**	**2.92**	**2.76**	*2.87*	**42.5 ISO**
VOC (lbs/hr)	**0.00**	**0.00**	**0.29**	*0.10*	**2.8 ISO**

Summary of Results
Unit CT2 Compliance Testing - Fuel Oil

Company: DeSoto Generating Company, LLC
Plant: DeSoto County Energy Park
Location: Arcadia, DeSoto County, Florida
Technicians: LJB, CDH
Source: Unit 2, a General Electric Frame 7FA Combustion Turbine Generator Set

Test Number	U2-FO-1	U2-FO-2	U2-FO-3		FDEP Permit Limits
Date	08/14/07	08/14/07	08/14/07		
Start Time (24 hour basis)	13:30	15:13	16:55		
Stop Time (24 hour basis)	14:51	16:40	18:10		
Turbine Operation				*Averages*	
Generator Output (MW, CT generated power)	167.24	167.33	167.12	*167.23*	
Barometric Pressure ("Hg)	29.73	29.71	29.71	*29.72*	
Air Inlet Duct Losses ("H_2O)	2.765	2.826	2.948	*2.846*	
Turbine Air Inlet Temperature (°F)	84.15	86.21	84.66	*85.01*	
Dewpoint Temperature (°F)	73.54	72.23	70.56	*72.11*	
Relative Humidity (% RH)	71.15	62.45	62.03	*65.21*	
Turbine Exhaust Temperature (°F)	1132.76	1133.43	1134.44	*1133.54*	
Water Injection Rates (lbs/sec)	30.770	31.151	31.221	*31.047*	
Water-to-Fuel Ratio	1.198	1.212	1.219	*1.210*	
Turbine Fuel Data					
Fuel Heating Value (Btu/lb, HHV)	19,486	19.486	19,486	*19,486*	
Fuel Density (lb/gal)	7.14	7.14	7.14	*7.14*	
O_2 "F-factor" (DSCFex/MMBtu @ 0% excess air)	9190	9190	9190	*9190*	
Fuel Flow (gallons/min)	215.899	216.012	215.182	*215.698*	
Heat Input (MMBtu/hr, Higher Heat Value)	1802.28	1803.23	1796.30	*1800.60*	
Ambient Conditions					
Atmospheric Pressure ("Hg)	29.84	29.83	29.83	*29.83*	
Temperature (°F): Dry bulb	90.0	94.8	88.2	*91.0*	
(°F): Wet bulb	81.8	81.8	78.1	*80.6*	
Humidity (lbs moisture/lb of air)	0.0210	0.0198	0.0179	*0.0196*	
Measured Emissions					
NO_X (ppmv, dry basis)	54.45	54.43	53.61	*54.16*	
NO_X (ppmv, dry @ 15% excess O_2)	**37.8**	**37.8**	**37.1**	*37.6*	**42**
NO_X (ppmv, dry @ 15% excess O_2, ISO Day)	46.5	45.2	43.0	*44.9*	
CO (ppmv, dry basis)	2.02	1.99	1.55	*1.85*	
CO (ppmv, dry @ 15% excess O_2)	**1.40**	**1.38**	**1.07**	*1.29*	**20**
THC (ppmv, wet basis as Methane)	0.42	1.24	0.86	*0.84*	
VOC (ppmv as Methane, wet @ 15% excess O_2)	**0.29**	**0.86**	**0.60**	*0.58*	**7**
O_2 (% volume, dry basis)	12.40	12.40	12.38	*12.39*	
CO_2 (% volume, dry basis)	6.44	6.41	6.44	*6.43*	
F_o (fuel factor, range = 1.260 to 1.413 for fuel oil and naphtha)	1.32	1.33	1.32	*1.32*	
Stack Volumetric Flow Rates					
via O_2 "F_d-factor" (SCFH, dry basis)	4.07E+07	4.07E+07	4.05E+07	*4.07E+07*	
Calculated Emission Rates (via M-19 O_2 "F-factor")					
NO_X (lbs/hr)	**264.8**	**264.8**	**259.2**	*262.9*	**351 ISO**
CO (lbs/hr)	**5.98**	**5.90**	**4.56**	*5.48*	**71.4 ISO**
VOC (lbs/hr, from THC measurements)	**0.71**	**2.1**	**1.5**	*1.42*	**16.2 ISO**

A-2
Part 75 RATA

Summary of Results - Unit CT1 Part 75 RATA Testing

Plant:	DeSoto County Energy Park	**Number of Tests:**	9
Source:	Unit 1	**t- value (97.5% confidence):**	2.306
Technician(s):	CFF, RPO	**NO_X CEMS Type:**	Thermo Environmental 42C
TRC Reference Methods:	EPA Methods 7E, 3A	**NO_X Detector Type:**	Chemiluninescent
Source CEMS Type:	NO_X Diluent	**O_2 CEMS Type:**	Servomex 1400
CEMS Basis (wet or dry):	dry basis	**O_2 Detector Type:**	Paramagnetic Cell

Test Run Number	**U1-RA-1**	**U1-RA-2**	**U1-RA-3**	**U1-RA-4**	**U1-RA-5**	**U1-RA-6**	**U1-RA-7**	**U1-RA-8**	**U1-RA-9**				
Date	8/19/2007	8/19/2007	8/19/2007	8/19/2007	8/19/2007	8/19/2007	8/19/2007	8/19/2007	8/19/2007				
Start Time (24hr)	12:21	12:58	13:33	14:09	14:43	15:16	15:52	16:28	17:02		Standard	Confidence	**Relative**
End Time (24 hr)	12:42	13:19	13:54	14:30	15:04	15:37	16:13	16:49	17:22	Average	Deviation	Coefficient	**Accuracy**
Unit Load (MW)	151	151	151	152	152	151	151	152	152				
Run Status (used or discarded)	used	used	used	used	used	used	used	used	used				
NO_X Data													
TRC RM NO_X (ppmv)	10.23	10.27	10.13	10.13	10.12	9.94	10.12	10.19	10.15	10.142	0.093		
CEMS NO_X (ppmv)	9.84	9.89	9.80	9.77	9.85	9.75	9.77	9.80	9.76	9.802	0.046		
Difference (ppmv)	0.394	0.385	0.327	0.362	0.271	0.188	0.352	0.395	0.390	0.340	0.070	0.054	
O_2 Data													
TRC RM O_2 (% vol, dry)	13.74	13.72	13.77	13.73	13.73	13.73	13.74	13.76	13.73	13.739	0.016		
CEMS O_2 (% vol, dry)	13.74	13.74	13.73	13.71	13.71	13.71	13.71	13.71	13.70	13.717	0.013		
Difference (% vol, dry)	0.005	-0.018	0.043	0.018	0.019	0.019	0.031	0.048	0.029	0.022	0.020	0.015	
NO_X-Diluent System RATA													
TRC RM NO_X Diluent (lb/MMBtu)	0.031	0.031	0.031	0.031	0.031	0.030	0.031	0.031	0.031	0.031	0.000		
CEMS NO_X Diluent (lb/MMBtu)	0.030	0.030	0.030	0.030	0.030	0.029	0.030	0.030	0.030	0.030	0.000		**3.24%**
Difference (lb/MMBtu)	0.001	0.001	0.001	0.001	0.001	0.001	0.001	0.001	0.001	0.001	0.000	0.000	
***RATA Result (Pass or Fail)**													***^^PASS***

****Bias Test and Adj. Factor**	Mean Difference (lb/MMBtu)	Confidence Coefficient	**Bias Adjustment Factor (BAF)**
NOx-Diluent	0.001	0.000	**1.033**

***Part 75 RATA Test Frequency Acceptance Criteria:**

^Semiannual: NOx Mass (lb/MMBtu): 7.5% < Relative Accuracy <= 10.0% or if CEMS is <= 0.200 lb/MMBtu average, difference from RM calculated rate not to exceed +/- 0.020 lb/MMBtu [App. B, Figure 2].

^^Annual: NOx Mass (lb/MMBtu): Relative Accuracy <= 7.5% or if CEMS is <= 0.200 lb/MMBtu average, difference from RM calculated rate not to exceed +/- 0.015 lb/MMBtu [App. B, Figure 2].

****Part 75 Bias Test and Adjustment Factor (Section 7.6)**

If the mean difference is less than or equal to the absolute value of the confidence coefficient, the system passes the bias test and the Bias Adjustment Factor (BAF) equals 1.
If not, a Bias Adjustment Factor (BAF) must be calculated and applied to the raw CEMS data. As per 40CFR75, Appendix A, 7.6.4 and 7.6.5.
(if a calculated BAF is greater than 1.111, then a default value of 1.111 may be used)

Summary of Results - Unit CT2 Part 75 RATA Testing

Plant:	DeSoto County Energy Park	**Number of Tests:**	9
Source:	Unit 2	**t- value (97.5% confidence):**	2.306
Technician(s):	CFF, RPO	**NO_X CEMS Type:**	Thermo Environmental 42C
TRC Reference Methods:	EPA Methods 7E, 3A	**NO_X Detector Type:**	Chemiluninescent
Source CEMS Type:	NO_X Diluent	**O_2 CEMS Type:**	Servomex 1400
CEMS Basis (wet or dry):	dry basis	**O_2 Detector Type:**	Paramagnetic Cell

Test Run Number	**U2-RA-1**	**U2-RA-2**	**U2-RA-3**	**U2-RA-4**	**U2-RA-5**	**U2-RA-6**	**U2-RA-7**	**U2-RA-8**	**U2-RA-9**				
Date	8/18/2007	8/18/2007	8/18/2007	8/18/2007	8/18/2007	8/18/2007	8/18/2007	8/18/2007	8/18/2007				
Start Time (24hr)	12:30	13:13	13:51	14:28	15:03	15:38	16:14	16:52	17:28		Standard	Confidence	**Relative**
End Time (24 hr)	12:51	13:34	14:12	14:49	15:24	15:59	16:35	17:13	17:49	Average	Deviation	Coefficient	**Accuracy**
Unit Load (MW)	157	156	156	156	156	157	157	157	158				
Run Status (used or discarded)	used	used	used	used	used	used	used	used	used				
NO_X Data													
TRC RM NO_X (ppmv)	10.69	10.76	10.85	10.87	10.94	10.71	11.03	10.59	10.94	10.820	0.142		
CEMS NO_X (ppmv)	10.58	10.53	10.50	10.50	10.56	10.39	10.53	10.55	10.56	10.522	0.058		
Difference (ppmv)	0.108	0.228	0.355	0.372	0.380	0.321	0.499	0.042	0.377	0.298	0.145	0.112	
O_2 Data													
TRC RM O_2 (% vol, dry)	13.70	13.70	13.68	13.71	13.69	13.65	13.66	13.67	13.66	13.680	0.021		
CEMS O_2 (% vol, dry)	13.66	13.65	13.65	13.66	13.65	13.62	13.65	13.64	13.63	13.645	0.012		
Difference (% vol, dry)	0.042	0.047	0.031	0.055	0.043	0.030	0.015	0.029	0.026	0.035	0.012	0.009	
NO_X-Diluent System RATA													
TRC RM NO_X Diluent (lb/MMBtu)	0.032	0.032	0.033	0.033	0.033	0.032	0.033	0.032	0.033	0.033	0.001		
CEMS NO_X Diluent (lb/MMBtu)	0.032	0.032	0.032	0.032	0.032	0.031	0.032	0.032	0.032	0.032	0.000		**3.23%**
Difference (lb/MMBtu)	0.000	0.000	0.001	0.001	0.001	0.001	0.001	0.000	0.001	0.001	0.001	0.000	
***RATA Result (Pass or Fail)**													***^^PASS***

****Bias Test and Adj. Factor**	Mean Difference (lb/MMBtu)	Confidence Coefficient	**Bias Adjustment Factor (BAF)**
NOx-Diluent	0.001	0.000	**1.021**

***Part 75 RATA Test Frequency Acceptance Criteria:**

^Semiannual: NOx Mass (lb/MMBtu): 7.5% < Relative Accuracy <= 10.0% or if CEMS is <= 0.200 lb/MMBtu average, difference from RM calculated rate not to exceed +/- 0.020 lb/MMBtu [App. B, Figure 2].

^^Annual: NOx Mass (lb/MMBtu): Relative Accuracy <= 7.5% or if CEMS is <= 0.200 lb/MMBtu average, difference from RM calculated rate not to exceed +/- 0.015 lb/MMBtu [App. B, Figure 2].

****Part 75 Bias Test and Adjustment Factor (Section 7.6)**

If the mean difference is less than or equal to the absolute value of the confidence coefficient, the system passes the bias test and the Bias Adjustment Factor (BAF) equals 1.
If not, a Bias Adjustment Factor (BAF) must be calculated and applied to the raw CEMS data. As per 40CFR75, Appendix A, 7.6.4 and 7.6.5.
(if a calculated BAF is greater than 1.111, then a default value of 1.111 may be used)

A-3
Example Calculations

PART 75 – CEMS RATA EXAMPLE CALCULATIONS

Correction of NO_x Gas Concentrations, C_{NO_x}

Refers to Test Run #CT1-RA-1

The logged data records were used for continuous instrumental monitor data. Analytical instruments tend to drift in their calibrations over time and with changes in atmospheric conditions. Span and zero gas bias drift checks (calibrations) were conducted prior to and following each test. The results of these calibrations were used to bracket and thus correct the raw gas concentrations into corrected (more accurate) gas concentrations. The calculation used for these corrections is 40 CFR 60, Appendix A, Method 7e, Equation 7e-5. This correction is required for NO_x, CO, O_2, and CO_2 exhaust concentrations. .

U_{NOx} = analyzer NO_x gas concentration, uncorrected for drift and bias

U_{NOx} = 10.14 ppmv, uncorrected

C_o = Average of initial/final zero gas concentrations

= 0..085 ppmv

C_m = Average of initial/final span gas concentrations

= 8.765 ppmv

C_{ma} = Actual upscale cylinder span gas concentrations

= 8.83 ppmv

C_{NOx} = Effluent NO_x gas concentration, ppmv corrected

$$= (U_{NOx} - C_o) \times \frac{C_{ma}}{C_m - C_o}$$

$$= (10.14 - 0.085) \times \frac{8.83}{8.765 - 0.085}$$

C_{NOx} = 10.23 ppmv NO_x, dry basis corrected

Oxides of Nitrogen Emission Rate, E_{NOx} (lbs/MMBtu) per O_2 "F-factor"

Refers to Test Run #CT1-RA-1

C_{NOx} = concentration of nitrogen oxides = 10.23 ppmvd (corr., from analyzer)

C_{O2} = concentration of oxygen = 13. 74% (corr, from analyzer)

F = oxygen "F-factor" from EPA 40 CFR 75, Appendix F and EPA Method 19

= DSCFex/MMBtu natural gas burned = 8710 DSCFex/MMBtu

K_{NOx} = NOx conversion factor from ppmv to lbs/scf = 1.194×10^{-7}

E_{NOx} = emissions of NO_x in lbs/MMBtu per 40 CFR 75, Appendix A req.

$$= C_{NOx} \times F \times \frac{20.9}{(20.9 - C_{O2})} \times K_{NOx}$$

$$= 10.23 \text{ ppmv} \times \frac{8710 \text{ DSCFex}}{\text{MMBtu}} \times \frac{20.9}{(20.9 - 13.74)} \times \frac{1.194 \times 10^{-7} \text{lbs}}{\text{SCF} \bullet \text{ppmv}}$$

E_{NOx} = **0.0311 lbs/MMBtu of NO_x**

The relative accuracy for the NO_x-diluent CEMS, is based upon the mean of the reference method using 40 CFR 75, Appendix A, Equations A-7, A-8, A-9, and A-10. An example from the Unit 1 NO_X CEMS certification is below.

NO_X-diluent CEMS Relative Accuracy RM Determination

Refers to Test Runs #CT1-RA-1to CT1-RA-9

Calculate arithmetic mean of differences:

n = number of data points = 9

d_i = difference between EPA M-7E reference method (RM) and CEMS NO_X emissions measurements during test runs i = 1 to 9 (i.e. Runs CT1-RA-1 to CT1-RA-9)

RM = average results of the reference method test runs CT1-RA-1 to CT1-RA-9

RM = 0.0309 lbs/MMBtu NO_X average

Average of the differences:

d_{ave} = average of the differences between RM and CEMS data

d_{ave} = -0.001 lbs/MMBtu NO_X difference

Calculate the standard deviation of the differences between RM and CEMS data:

S_d = Standard Deviation of the differences between RM and CEMS data

S_d = 0.000

Calculate the 2.5 % confidence coefficient

CC = confidence coefficient for test runs CT1-RA-1 to CT1-RA-9

$$= t^{0.975} \times \frac{S_d}{\sqrt{n}}, \text{ where } t^{0.975} = 2.306$$

$$= 2.306 \times \frac{0.000}{\sqrt{9}}$$

CC = 0.000

<u>NO_X-diluent CEMS Relative Accuracy Difference Determination</u>
Refers to Test Runs #CT1-RA-1to CT1-RA-9

RM_{ave} = average results of the nine reference method test runs = 0.031 lbs/MMBtu NO_X
$CEMS_{ave}$ = average results of the nine CEMS data test runs = 0.030 lbs/MMBtu NO_X

$$\%RA = (|d_{ave}| + CC) / RM_{ave} * 100$$

$$= (0.001+0.000)/ 0.0309 * 100$$

$$= 3.24\%$$

Diff = difference of the CEMS data from the RM data

$$= RM_{ave} - CEMS_{ave}$$

$$= 0.031 - 0.030$$

Diff = - 0.001 lbs/MMBtu NO_X difference of CEMS from RM

If the mean difference between the CEMS and the reference method is greater than the absolute value of the confidence coefficient then the monitor fails to meet the bias test requirement. This uses equations from CFR 75, Appendix A, Equations A-7, A-8, A-9, and A-12. An example from the NO_x-diluent CEMS (paired NO_x and O_2 CEMS) certification is below.

NO_X Emissions CEMS Bias Adjustment Factor Determination

Refers to Test Runs #CT1-RA-1to CT1-RA-9

d_{ave} = average of the differences between RM and CEMS data = 0.001
CC = confidence coefficient for RM and CEMS data = 0.000

Is $d_{ave} \leq |CC|$?

Is $-0.001 \leq 0.000$? No, the monitor must use a bias factor t

The bias adjustment factor = $1 + |d_{ave}| / CEMS_{ave}$

BAF = 1 + 0.001 / .030 = 1.033

COMPLIANCE - EXAMPLE CALCULATIONS

Stack Gas Flow Rates via F Factors
Refers to Test Run No. CT1-NG-1

Convert fuel flow to heat input:
Hg = heating value of nat. gas from fuel analysis = 1031.0 Btu/SCF (gross)
FF = total fuel flow for turbine = 19.2770 lb/sec from fuel meter
NG density = 0.04404 lb/CF @ 68 F (from NG sp gr & density of air)
FF = total fuel flow for turbine = 1575.834 kSCFH from fuel meters
HI = heat input (MMBtu/hr)

$$HI = \frac{FF \times Hg}{1000} = \frac{1575.834\,\text{kSCFH} \times 1031.0\,\text{Btu/SCF}}{1000} = 1624.7\ \text{MMBtu/hr}$$

Calculate flow rate using **O_2 F_d-factor**:
C_{O2} = O_2 concentration in exhaust = 13.74% by volume, dry basis
O_2 F_d-factor = 8710 DSCF of Exhaust/MMBtu of fuel burned @ 0% excess air

$Qd_{1(EPA)}$ = Stack Exhaust Gas Flow Rate via O_2 F_d-factor @EPA Conditions

$$= \frac{HI \times O_2F_d - \text{factor} \times 20.9}{20.9 - C_{O2}}$$

$$= \frac{1624.7 \times 8710 \times 20.9}{20.9 - 13.74}$$

$Qd_{1(EPA)}$ = 4.131×10^7 DSCFH, EPA Conditions

F_o Calculation to Verify O_2/CO_2 Measurements
Refers to Test Run No. CT1-C-1

C_{CO2} = concentration of carbon dioxide = 4.21% (from analyzer, ave.)
C_{O2} = concentration of oxygen = 13.74% (from analyzer, ave.)

F_o = fuel factor for natural gas combustion by-products

$$= \frac{20.9 - \%\,O_2}{\%\,CO_2}$$

$$F_O = \frac{20.9 - 13.74}{4.21}$$

F_O = 1.70 *(acceptable F_O values for natural gas = 1.600 - 1.836)*

NOx Correction to 15% O_2

Refers to Test Run No. CT1-C-1

C_{NOx} = observed NOx concentration = 10.21 ppmv (corr. from analyzer)
C_{O2} = concentration of oxygen = 13.74% volume (corr. from analyzer)

NOx @15% O_2 = NO_x emission concentration, corrected to 15% excess oxygen

$$= \frac{(C_{NOx} \times (20.9 - 15.0\%\ O_2))}{20.9 - C_{O2}}$$

$$= \frac{10.21 \times 5.9}{20.9 - 13.74}$$

NOx @15% O_2 = 8.41 ppmv @ 15% excess O_2

NOx Mass Emission Rate (lbs/hr)

Refers to Test Run No. CT1-C-1

C_{NOx} = observed concentration of NOx = 10.21 ppmv (average)
MW_{NOx} = 46.01 lb/lb-mole for nitrogen dioxide
for an ideal gas, 385.15 SCF = 1.0 lb/mole
Q_{d1} = 4.131×10^7 SCFH, dry (from O_2 "F-factor" calculated ex. flow)

M_{NOx} = mass emission rate of NOx in (lb/hr)

$$= C_{NOx} \times 10^{-6} \times Q_{d1} \times \frac{MW_{NOx}}{385.15}$$

$$= 10.21 \times 10^{-6} \times 4.131 \times 10^{7} \times \frac{46.01}{385.15}$$

M_{NOx} = 50.4 lbs/hr of NO_x

CO Correction to 15% O_2

Refers to Test Run No. CT1-C-1

C_{CO} = observed CO concentration = 0.74 ppmv (from analyzer)
C_{O_2} = concentration of oxygen = 13.74% volume (from analyzer)

CO @15% O_2 = CO emission concentration, corrected to 15% excess oxygen

$$= \frac{(C_{CO} \text{ x } (20.9 - 15.0\% \ O_2))}{20.9 - C_{O_2}}$$

$$= \frac{0.74 \text{ x } 5.9}{20.9 - 13.74}$$

CO @15% O_2 = 0.61 ppmv @ 15% excess O_2

CO Mass Emission Rate (lbs/hr)

Refers to Test Run No. CT1-C-1

CO = observed concentration of CO = 0.74 ppmv (average)
MW_{CO} = 28.01 lb/lb-mole for carbon monoxide
Q_{d1} = $4.131 \text{ x } 10^7$ SCFH, dry (from O_2 "F-factor" calculated ex. flow)

M_{CO} = mass emission rate of CO in (lb/hr)

$$= C_{CO} \text{ x } 10^{-6} \text{ x } Q_{d1} \text{ x } \frac{MW_{CO}}{385.15}$$

$$= 0.74 \text{ x } 10^{-6} \text{ x } 4.131 \text{ x } 10^7 \text{ x } \frac{28.01}{385.15}$$

M_{CO} = 2.22 lbs/hr of CO

VOC Correction to 15% O_2

Refers to Test Run No. CT1-C-1

C_{VOC} = observed VOC concentration = 0.72 ppmv as methane
C_{O_2} = concentration of oxygen = 13.74% volume (from analyzer)
F_W = stack gas moisture mole fraction = 0..0923

VOC @15% O_2 = VOC emission concentration, corrected to 15% excess oxygen

$$= \frac{(C_{VOC} x (20.9 - 15.0\% O_2))}{20.9 - C_{O2}} \times \frac{1}{1 - F_w}$$

$$= \frac{0.72 \text{ x } 5.9}{20.9 - 13.74} \times \frac{1}{1 - 0.0923}$$

VOC @15% O_2 = 0.65 ppmv @ 15% excess O_2

<u>VOC Mass Emission Rate (lbs/hr)</u>
Refers to Test Run No. CT1-C-1

C_{VOC} = observed concentration of VOC = 0.72 ppmv as methane
MW_{VOC} = 16.0426 lb/lb-mole for methane
Q_{d1} = 4.131 x 10^7 SCFH, dry (from O_2 "F-factor" calculated ex. flow)
F_W = stack gas moisture mole fraction = 0.0923

M_{VOC} = mass emission rate of VOC in (lb/hr)

$$= C_{VOC} \times 10^{-6} \times Q_{d1} \times \frac{MW_{CH4}}{385.15} \times \frac{1}{1 - F_w}$$

$$= 0.72 \times 10^{-6} \times 4.131 \text{ x } 10^7 \times \frac{16.0426}{385.15} \times \frac{1}{1 - 0.0923}$$

M_{VOC} = 1.36 lbs/hr of VOC (Differences due to rounding)

B-1
CT1 – Natural Gas

Linearity Check	NO_X	CO	O_2	CO_2	THC
Calibration Span (ppm), O_2 & CO_2 in %	15.06	16.25	22.10	8.54	18.00
Low Level Certified Value (ppm or % vol)	na	na	na	na	5.06
Mid Level Certified Value (ppm or % vol)	8.83	9.22	12.97	4.53	9.12
High Level Certified Value (ppm or % vol)	15.06	16.25	22.10	8.54	16.35
Zero Target (% Span)	0.0	0.0	0.0	0.0	0.0
Low Level Target (% Span)	na	na	na	na	28.1
Mid Level Target (% Span)	58.6	56.7	58.7	53.0	50.7
High Level Target (% Span)	100.0	100.0	100.0	100.0	90.8
Zero Observed (% Span)	0.0	0.4	0.0	0.0	0.2
Low Level Observed (% Span)	na	na	na	na	28.5
Mid Level Observed (% Span)	58.7	56.9	57.9	52.9	50.5
High Level Observed (% Span)	101.1	100.1	100.0	100.5	90.3
Zero Observed (ppm or % vol)	0.00	0.07	0.00	0.00	0.03
Low Level Observed (ppm or % vol)	na	na	na	na	5.13
Mid Level Observed (ppm or % vol)	8.84	9.24	12.80	4.52	9.09
High Level Observed (ppm or % vol)	15.23	16.27	22.10	8.58	16.26
% Difference From Zero to Target	0.0	0.4	0.0	0.0	-0.2
% Difference From Low to Target	na	na	na	na	1.4
% Difference From Mid to Target	-0.1	-0.1	0.8	0.1	-0.3
% Difference From High to Target	-1.1	-0.1	0.0	-0.5	-0.6
EPA Allowable % Difference from Target	±2% Span	±2% Span	±2% Span	±2% Span	±5% Cal Gas

Run U1-NG-Stratification	NO_X	CO	O_2	CO_2	THC
Calibration Span (ppm), O_2 & CO_2 in %	15.06	16.25	22.10	8.54	18.0
Calibration Gas Certified Value (ppm or %)	8.83	9.22	22.10	4.53	9.12
Target Calibration Gas (% Span)	58.6	56.7	100.0	53.0	50.7
Actual Zero Gas from Direct (% Span)	0.0	0.4	0.0	0.0	0.2
Actual Calibration Gas from Direct (% Span)	58.7	56.9	100.0	52.9	50.5
Initial Readings					
Zero Gas (% Span)	0.9	0.2	0.0	0.0	0.3
Calibration Gas (% Span)	58.4	56.7	99.5	52.5	50.5
Zero Gas (ppmv)	0.13	0.04	0.00	0.00	0.06
Calibration Gas (ppmv)	8.80	9.21	22.00	4.48	9.09
Final Readings					
Zero Gas (% Span)	1.0	0.0	0.1	0.0	2.2
Calibration Gas (% Span)	58.4	57.1	99.8	52.5	51.5
Zero Gas (ppmv)	0.15	0.00	0.03	0.00	0.39
Calibration Gas (ppmv)	8.80	9.28	22.05	4.48	9.27
Bias and Drift Calculations					
Zero Bias (% Span) (Run-Direct Cal) ≤5%	1.0	-0.4	0.1	0.0	2.0
Calibration Bias (% Span) ≤5%	-0.3	0.2	-0.2	-0.5	1.0
Zero Drift (% Span) (Run-Run) ≤2 or 3%	-0.1	0.2	-0.1	0.0	-1.8
Calibration Drift (% Span) ≤2 or 3%	0.0	-0.4	-0.2	0.0	-1.0
Run Results					
Raw Results (% Span)	0.0	0.0	0.0	0.0	0.0
Raw Results (ppmv or % vol)	0.00	0.00	0.00	0.00	0.00
Corrected Results (ppmv or % vol) from % Span	-0.14	-0.02	-0.02	0.00	-0.23

Calibration Error, Bias, and Drift Checks

Run U1-NG-1A/U1-RA-1	NO_X	CO	O_2	CO_2	THC
Calibration Span (ppm), O_2 & CO_2 in %	15.06	16.25	22.10	8.54	18.0
Calibration Gas Certified Value (ppm or %)	8.83	9.22	22.10	4.53	9.12
Target Calibration Gas (% Span)	58.6	56.7	100.0	53.0	50.7
Actual Zero Gas from Direct (% Span)	0.0	0.4	0.0	0.0	0.2
Actual Calibration Gas from Direct (% Span)	58.7	56.9	100.0	52.9	28.5
Initial Readings					
Zero Gas (% Span)	1.0	0.0	0.1	0.0	2.2
Calibration Gas (% Span)	58.4	57.1	99.8	52.5	51.5
Zero Gas (ppmv)	0.15	0.00	0.03	0.00	0.39
Calibration Gas (ppmv)	8.80	9.28	22.05	4.48	9.27
Final Readings					
Zero Gas (% Span)	0.1	0.9	0.0	0.0	3.0
Calibration Gas (% Span)	58.0	56.7	99.9	52.5	51.7
Zero Gas (ppmv)	0.02	0.14	0.00	0.00	0.54
Calibration Gas (ppmv)	8.73	9.21	22.08	4.48	9.30
Bias and Drift Calculations					
Zero Bias (% Span) (Run-Direct Cal) ≤5%	0.1	0.4	0.0	0.0	2.8
Calibration Bias (% Span) ≤5%	-0.7	-0.2	-0.1	-0.5	23.2
Zero Drift (% Span) (Run-Run) ≤2 or 3%	0.9	-0.9	0.1	0.0	-0.8
Calibration Drift (% Span) ≤2 or 3%	0.5	0.4	-0.1	0.0	-0.2
Run Results					
Raw Results (% Span)	67.3	5.3	62.1	48.7	7.4
Raw Results (ppmv or % vol)	10.14	0.86	13.72	4.16	1.34
Corrected Results (ppmv or % vol) from % Span	10.23	0.79	13.74	4.21	0.90

Run U1-NG-1B/U1-RA-2	NO_X	CO	O_2	CO_2	THC
Calibration Span (ppm), O_2 & CO_2 in %	15.06	16.25	22.10	8.54	18.0
Calibration Gas Certified Value (ppm or %)	8.83	9.22	22.10	4.53	9.12
Target Calibration Gas (% Span)	58.6	56.7	100.0	53.0	50.7
Actual Zero Gas from Direct (% Span)	0.0	0.4	0.0	0.0	0.2
Actual Calibration Gas from Direct (% Span)	58.7	56.9	100.0	52.9	50.5
Initial Readings					
Zero Gas (% Span)	0.1	0.9	0.0	0.0	3.0
Calibration Gas (% Span)	58.0	56.7	99.9	52.5	51.7
Zero Gas (ppmv)	0.02	0.14	0.00	0.00	0.54
Calibration Gas (ppmv)	8.73	9.21	22.08	4.48	9.30
Final Readings					
Zero Gas (% Span)	0.5	1.9	0.0	0.0	0.3
Calibration Gas (% Span)	57.9	57.4	99.8	52.5	51.8
Zero Gas (ppmv)	0.07	0.31	0.00	0.00	0.06
Calibration Gas (ppmv)	8.72	9.33	22.05	4.48	9.33
Bias and Drift Calculations					
Zero Bias (% Span) (Run-Direct Cal) ≤5%	0.5	1.5	0.0	0.0	0.2
Calibration Bias (% Span) ≤5%	-0.8	0.6	-0.2	-0.5	1.3
Zero Drift (% Span) (Run-Run) ≤2 or 3%	-0.3	-1.0	0.0	0.0	2.7
Calibration Drift (% Span) ≤2 or 3%	0.1	-0.7	0.1	0.0	-0.2
Run Results					
Raw Results (% Span)	67.3	5.6	62.0	48.7	5.2
Raw Results (ppmv or % vol)	10.14	0.91	13.70	4.16	0.94
Corrected Results (ppmv or % vol) from % Span	10.27	0.70	13.72	4.21	0.65

Quality Assurance Activities
Calibration Error, Bias, and Drift Checks

Run U1-NG-1C/U1-RA-3	NO_X	CO	O_2	CO_2	THC
Calibration Span (ppm), O_2 & CO_2 in %	15.06	16.25	22.10	8.54	18.0
Calibration Gas Certified Value (ppm or %)	8.83	9.22	22.10	4.53	9.12
Target Calibration Gas (% Span)	58.6	56.7	100.0	53.0	50.7
Actual Zero Gas from Direct (% Span)	0.0	0.4	0.0	0.0	0.2
Actual Calibration Gas from Direct (% Span)	58.7	56.9	100.0	52.9	50.5
Initial Readings					
Zero Gas (% Span)	0.5	1.9	0.0	0.0	0.3
Calibration Gas (% Span)	57.9	57.4	99.8	52.5	51.8
Zero Gas (ppmv)	0.07	0.31	0.00	0.00	0.06
Calibration Gas (ppmv)	8.72	9.33	22.05	4.48	9.33
Final Readings					
Zero Gas (% Span)	0.0	0.2	0.0	0.0	0.8
Calibration Gas (% Span)	57.6	56.9	99.9	52.5	51.3
Zero Gas (ppmv)	0.00	0.04	0.00	0.00	0.15
Calibration Gas (ppmv)	8.67	9.24	22.08	4.48	9.24
Bias and Drift Calculations					
Zero Bias (% Span) (Run-Direct Cal) ≤5%	0.0	-0.2	0.0	0.0	0.7
Calibration Bias (% Span) ≤5%	-1.1	0.0	-0.1	-0.5	0.8
Zero Drift (% Span) (Run-Run) ≤2 or 3%	0.5	1.7	0.0	0.0	-0.5
Calibration Drift (% Span) ≤2 or 3%	0.3	0.6	-0.1	0.0	0.5
Run Results					
Raw Results (% Span)	66.2	5.5	62.2	48.7	4.1
Raw Results (ppmv or % vol)	9.97	0.89	13.75	4.16	0.73
Corrected Results (ppmv or % vol) from % Span	10.13	0.72	13.77	4.21	0.62

Run U1-NG-2a/RA-4	NO_X	CO	O_2	CO_2	THC
Calibration Span (ppm), O_2 & CO_2 in %	15.06	16.25	22.10	8.54	18.0
Calibration Gas Certified Value (ppm or %)	8.83	9.22	22.10	4.53	9.12
Target Calibration Gas (% Span)	58.6	56.7	100.0	53.0	50.7
Actual Zero Gas from Direct (% Span)	0.0	0.4	0.0	0.0	0.2
Actual Calibration Gas from Direct (% Span)	58.7	56.9	100.0	52.9	50.5
Initial Readings					
Zero Gas (% Span)	0.0	0.2	0.0	0.0	0.8
Calibration Gas (% Span)	57.6	56.9	99.9	52.5	51.3
Zero Gas (ppmv)	0.00	0.04	0.00	0.00	0.15
Calibration Gas (ppmv)	8.67	9.24	22.08	4.48	9.24
Final Readings					
Zero Gas (% Span)	0.2	0.8	0.0	0.0	1.5
Calibration Gas (% Span)	57.4	56.7	99.3	52.2	50.7
Zero Gas (ppmv)	0.03	0.13	0.00	0.00	0.27
Calibration Gas (ppmv)	8.65	9.21	21.95	4.46	9.12
Bias and Drift Calculations					
Zero Bias (% Span) (Run-Direct Cal) ≤5%	0.2	0.4	0.0	0.0	1.3
Calibration Bias (% Span) ≤5%	-1.3	-0.2	-0.7	-0.7	0.2
Zero Drift (% Span) (Run-Run) ≤2 or 3%	-0.2	-0.6	0.0	0.0	-0.7
Calibration Drift (% Span) ≤2 or 3%	0.1	0.2	0.6	0.2	0.7
Run Results					
Raw Results (% Span)	65.9	5.2	61.9	48.7	2.1
Raw Results (ppmv or % vol)	9.93	0.85	13.68	4.16	0.37
Corrected Results (ppmv or % vol) from % Span	10.13	0.77	13.73	4.22	0.16

Run U1-NG-2b/RA-5	NO_X	CO	O_2	CO_2	THC
Calibration Span (ppm), O_2 & CO_2 in %	15.06	16.25	22.10	8.54	18.0
Calibration Gas Certified Value (ppm or %)	8.83	9.22	22.10	4.53	9.12
Target Calibration Gas (% Span)	58.6	56.7	100.0	53.0	50.7
Actual Zero Gas from Direct (% Span)	0.0	0.4	0.0	0.0	0.2
Actual Calibration Gas from Direct (% Span)	58.7	56.9	100.0	52.9	50.5
Initial Readings					
Zero Gas (% Span)	0.2	0.8	0.0	0.0	1.5
Calibration Gas (% Span)	57.4	56.7	99.3	52.2	50.7
Zero Gas (ppmv)	0.03	0.13	0.00	0.00	0.27
Calibration Gas (ppmv)	8.65	9.21	21.95	4.46	9.12
Final Readings					
Zero Gas (% Span)	0.2	1.7	0.0	0.0	0.7
Calibration Gas (% Span)	58.1	56.8	99.2	52.2	51.2
Zero Gas (ppmv)	0.03	0.27	0.00	0.00	0.12
Calibration Gas (ppmv)	8.75	9.23	21.93	4.46	9.21
Bias and Drift Calculations					
Zero Bias (% Span) (Run-Direct Cal) ≤5%	0.2	1.2	0.0	0.0	0.5
Calibration Bias (% Span) ≤5%	-0.6	-0.1	-0.8	-0.7	0.7
Zero Drift (% Span) (Run-Run) ≤2 or 3%	0.0	-0.9	0.0	0.0	0.8
Calibration Drift (% Span) ≤2 or 3%	-0.7	-0.1	0.1	0.0	-0.5
Run Results					
Raw Results (% Span)	66.2	5.1	61.7	48.7	2.0
Raw Results (ppmv or % vol)	9.97	0.83	13.63	4.16	0.36
Corrected Results (ppmv or % vol) from % Span	10.12	0.64	13.73	4.23	0.17

Run U1-NG-2c/RA-6	NO_X	CO	O_2	CO_2	THC
Calibration Span (ppm), O_2 & CO_2 in %	15.06	16.25	22.10	8.54	18.0
Calibration Gas Certified Value (ppm or %)	8.83	9.22	22.10	4.53	9.12
Target Calibration Gas (% Span)	58.6	56.7	100.0	53.0	50.7
Actual Zero Gas from Direct (% Span)	0.0	0.4	0.0	0.0	0.2
Actual Calibration Gas from Direct (% Span)	58.7	56.9	100.0	52.9	50.5
Initial Readings					
Zero Gas (% Span)	0.2	1.7	0.0	0.0	0.7
Calibration Gas (% Span)	58.1	56.8	99.2	52.2	51.2
Zero Gas (ppmv)	0.03	0.27	0.00	0.00	0.12
Calibration Gas (ppmv)	8.75	9.23	21.93	4.46	9.21
Final Readings					
Zero Gas (% Span)	0.2	1.4	0.0	0.0	1.3
Calibration Gas (% Span)	57.1	57.2	99.3	52.2	51.5
Zero Gas (ppmv)	0.03	0.22	0.00	0.00	0.24
Calibration Gas (ppmv)	8.60	9.30	21.95	4.46	9.27
Bias and Drift Calculations					
Zero Bias (% Span) (Run-Direct Cal) ≤5%	0.2	0.9	0.0	0.0	1.2
Calibration Bias (% Span) ≤5%	-1.6	0.4	-0.7	-0.7	1.0
Zero Drift (% Span) (Run-Run) ≤2 or 3%	0.0	0.3	0.0	0.0	-0.7
Calibration Drift (% Span) ≤2 or 3%	1.0	-0.4	-0.1	0.0	-0.3
Run Results					
Raw Results (% Span)	64.8	4.9	61.7	48.7	3.4
Raw Results (ppmv or % vol)	9.76	0.79	13.63	4.16	0.61
Corrected Results (ppmv or % vol) from % Span	9.94	0.56	13.73	4.23	0.43

Quality Assurance Activities
Calibration Error, Bias, and Drift Checks

Run U1-NG-3a/RA-7	NO_X	CO	O_2	CO_2	THC
Calibration Span (ppm), O_2 & CO_2 in %	15.06	16.25	22.10	8.54	18.0
Calibration Gas Certified Value (ppm or %)	8.83	9.22	22.10	4.53	9.12
Target Calibration Gas (% Span)	58.6	56.7	100.0	53.0	50.7
Actual Zero Gas from Direct (% Span)	0.0	0.4	0.0	0.0	0.2
Actual Calibration Gas from Direct (% Span)	58.7	56.9	100.0	52.9	50.5
Initial Readings					
Zero Gas (% Span)	0.2	1.4	0.0	0.0	1.3
Calibration Gas (% Span)	57.1	57.2	99.3	52.2	51.5
Zero Gas (ppmv)	0.03	0.22	0.00	0.00	0.24
Calibration Gas (ppmv)	8.60	9.30	21.95	4.46	9.27
Final Readings					
Zero Gas (% Span)	0.3	1.4	0.0	0.2	-1.0
Calibration Gas (% Span)	57.6	57.7	99.7	52.2	51.3
Zero Gas (ppmv)	0.05	0.22	0.00	0.02	-0.18
Calibration Gas (ppmv)	8.67	9.37	22.03	4.46	9.24
Bias and Drift Calculations					
Zero Bias (% Span) (Run-Direct Cal) ≤5%	0.3	0.9	0.0	0.2	-1.2
Calibration Bias (% Span) ≤5%	-1.1	0.8	-0.3	-0.7	0.8
Zero Drift (% Span) (Run-Run) ≤2 or 3%	-0.1	0.0	0.0	-0.2	2.3
Calibration Drift (% Span) ≤2 or 3%	-0.5	-0.4	-0.4	0.0	0.2
Run Results					
Raw Results (% Span)	65.7	6.8	61.9	48.9	-3.9
Raw Results (ppmv or % vol)	9.89	1.11	13.67	4.18	-0.70
Corrected Results (ppmv or % vol) from % Span	10.12	0.90	13.74	4.24	-0.72

Run U1-NG-3b/RA-8	NO_X	CO	O_2	CO_2	THC
Calibration Span (ppm), O_2 & CO_2 in %	15.06	16.25	22.10	8.54	18.0
Calibration Gas Certified Value (ppm or %)	8.83	9.22	22.10	4.53	9.12
Target Calibration Gas (% Span)	58.6	56.7	100.0	53.0	50.7
Actual Zero Gas from Direct (% Span)	0.0	0.4	0.0	0.0	0.2
Actual Calibration Gas from Direct (% Span)	58.7	56.9	100.0	52.9	50.5
Initial Readings					
Zero Gas (% Span)	0.3	1.4	0.0	0.2	-1.0
Calibration Gas (% Span)	57.6	57.7	99.7	52.2	51.3
Zero Gas (ppmv)	0.05	0.22	0.00	0.02	-0.18
Calibration Gas (ppmv)	8.67	9.37	22.03	4.46	9.24
Final Readings					
Zero Gas (% Span)	0.3	2.1	0.0	0.2	1.2
Calibration Gas (% Span)	57.6	57.5	99.6	52.2	51.5
Zero Gas (ppmv)	0.05	0.34	0.00	0.02	0.21
Calibration Gas (ppmv)	8.67	9.35	22.02	4.46	9.27
Bias and Drift Calculations					
Zero Bias (% Span) (Run-Direct Cal) ≤5%	0.3	1.7	0.0	0.2	1.0
Calibration Bias (% Span) ≤5%	-1.1	0.7	-0.4	-0.7	1.0
Zero Drift (% Span) (Run-Run) ≤2 or 3%	0.0	-0.7	0.0	0.0	-2.2
Calibration Drift (% Span) ≤2 or 3%	0.0	0.1	0.0	0.0	-0.2
Run Results					
Raw Results (% Span)	66.4	6.9	62.0	48.9	1.5
Raw Results (ppmv or % vol)	10.00	1.12	13.71	4.18	0.27
Corrected Results (ppmv or % vol) from % Span	10.19	0.85	13.76	4.24	0.25

Quality Assurance Activities
Calibration Error, Bias, and Drift Checks

Run U1-NG-3c/RA-9	NO_X	CO	O_2	CO_2	THC
Calibration Span (ppm), O_2 & CO_2 in %	15.06	16.25	22.10	8.54	18.0
Calibration Gas Certified Value (ppm or %)	8.83	9.22	22.10	4.53	9.12
Target Calibration Gas (% Span)	58.6	56.7	100.0	53.0	50.7
Actual Zero Gas from Direct (% Span)	0.0	0.4	0.0	0.0	0.2
Actual Calibration Gas from Direct (% Span)	58.7	56.9	100.0	52.9	50.5
Initial Readings					
Zero Gas (% Span)	0.3	2.1	0.0	0.2	1.2
Calibration Gas (% Span)	57.6	57.5	99.6	52.2	51.5
Zero Gas (ppmv)	0.05	0.34	0.00	0.02	0.21
Calibration Gas (ppmv)	8.67	9.35	22.02	4.46	9.27
Final Readings					
Zero Gas (% Span)	0.1	3.0	0.1	0.2	-0.5
Calibration Gas (% Span)	57.8	58.2	99.5	52.2	51.3
Zero Gas (ppmv)	0.02	0.49	0.03	0.02	-0.09
Calibration Gas (ppmv)	8.70	9.46	21.98	4.46	9.24
Bias and Drift Calculations					
Zero Bias (% Span) (Run-Direct Cal) ≤5%	0.1	2.6	0.1	0.2	-0.7
Calibration Bias (% Span) ≤5%	-0.9	1.4	-0.5	-0.7	0.8
Zero Drift (% Span) (Run-Run) ≤2 or 3%	0.2	-0.9	-0.1	0.0	1.7
Calibration Drift (% Span) ≤2 or 3%	-0.2	-0.7	0.2	0.0	0.2
Run Results					
Raw Results (% Span)	66.3	6.5	61.9	48.9	-2.3
Raw Results (ppmv or % vol)	9.98	1.06	13.67	4.18	-0.41
Corrected Results (ppmv or % vol) from % Span	10.15	0.66	13.73	4.24	-0.47

Plant DeSoto, Unit CT1 - NG, Logged QA Calibration Records

U1-NG-Stratification Check 8/19/2007 11:39:04 11:54:04

Initial Linearity Test	Zero	Low	Mid	Span	L-Lin	M-Lin	S-Lin
NO (ppmv)	0	0	15.23	8.84	0	-1.12	-0.03
CO (ppmv)	0.07	0	16.27	9.24	0	-0.11	-0.15
O2 (%)	0	0	12.8	22.1	0	0.77	0
CO2 (%)	0	0	8.58	4.52	0	-0.44	0.22
THC (ppmv)	0.03	0.2	0.2	9.09	27	89.72	0.17

Initial and Final Bias and Drift	I-Zero	I-Span	F-Zero	F-Span	Z-Bias	S-Bias	Z-Drift	S-Drift
NO (ppmv)	0.13	8.80	0.15	8.80	1	-0.22	1	0
CO (ppmv)	0.04	9.21	0	9.41	-0.45	1.02	1.25	-46.29
O2 (%)	0	22.00	0.03	22.05	0.11	-0.23	4.43	-98.86
CO2 (%)	0	4.48	0	4.48	0	-0.44	6.67	0
THC (ppmv)	0.06	9.09	0.39	9.27	2	1	-1.06	-50.39

Run Results and Cal Gases Used	Raw	Corrected	Ranges	Low Gas	Mid Gas	Span Gas
NO (ppmv)	10.12	20.19	15.06	0	15.06	8.83
CO (ppmv)	0.44	0.56	16.25	0	16.25	9.22
O2 (%)	13.67	27.28	22.1	0	12.97	22.1
CO2 (%)	4.18	7.87	8.54	0	8.54	4.54
THC (ppmv)	1.79	3.07	18	5.06	16.35	9.12

U1-NG-RATA-Run 1 8/19/2007 12:21:06 12:42:06

Initial Linearity Test	Zero	Low	Mid	Span	L-Lin	M-Lin	S-Lin
NO (ppmv)	0	0	15.23	8.84	0	-1.12	-0.03
CO (ppmv)	0.07	0	16.27	9.24	0	-0.11	-0.15
O2 (%)	0	0	12.8	22.1	0	0.77	0
CO2 (%)	0	0	8.58	4.52	0	-0.44	0.22
THC (ppmv)	0.03	0.2	0.2	9.09	27	89.72	0.17

Initial and Final Bias and Drift	I-Zero	I-Span	F-Zero	F-Span	Z-Bias	S-Bias	Z-Drift	S-Drift
NO (ppmv)	0.15	8.8	0.02	8.73	0.11	-0.67	0.89	0.45
CO (ppmv)	0	9.41	0.14	9.21	0.45	-0.23	-0.9	1.24
O2 (%)	0.03	22.05	0	22.07	0	-0.11	0.11	-0.11
CO2 (%)	0	4.48	0	4.48	0	-0.44	0	0
THC (ppmv)	0.39	9.27	0.54	9.3	2.83	1.17	-0.83	-0.17

Run Results and Cal Gases Used	Raw	Corrected	Ranges	Low Gas	Mid Gas	Span Gas
NO (ppmv)	10.14	10.22	15.06	0	15.06	8.83
CO (ppmv)	0.86	0.79	16.25	0	16.25	9.22
O2 (%)	13.72	13.74	22.1	0	12.97	22.1
CO2 (%)	4.16	4.22	8.54	0	8.54	4.54
THC (ppmv)	1.34	0.9	18	5.06	16.35	9.12

Plant DeSoto, Unit CT1 - NG, Logged QA Calibration Records

U1-NG-RATA-Run 2 8/19/2007 12:58:02 13:19:02

Initial Linearity Test	Zero	Low	Mid	Span	L-Lin	M-Lin	S-Lin
NO (ppmv)	0	0	15.23	8.84	0	-1.12	-0.03
CO (ppmv)	0.07	0	16.27	9.24	0	-0.11	-0.15
O2 (%)	0	0	12.8	22.1	0	0.77	0
CO2 (%)	0	0	8.58	4.52	0	-0.44	0.22
THC (ppmv)	0.03	0.2	0.2	9.09	27	89.72	0.17

Initial and Final Bias and Drift	I-Zero	I-Span	F-Zero	F-Span	Z-Bias	S-Bias	Z-Drift	S-Drift
NO (ppmv)	0.02	8.73	0.07	8.72	0.45	-0.78	-0.33	0.11
CO (ppmv)	0.14	9.21	0.31	9.33	1.47	0.56	-1.02	-0.79
O2 (%)	0	22.07	0	22.05	0	-0.23	0	0.11
CO2 (%)	0	4.48	0	4.48	0	-0.44	0	0
THC (ppmv)	0.54	9.3	0.06	9.33	0.17	1.33	2.67	-0.17

Run Results and Cal Gases Used	Raw	Corrected	Ranges	Low Gas	Mid Gas	Span Gas
NO (ppmv)	10.14	10.27	15.06	0	15.06	8.83
CO (ppmv)	0.91	0.69	16.25	0	16.25	9.22
O2 (%)	13.7	13.72	22.1	0	12.97	22.1
CO2 (%)	4.16	4.21	8.54	0	8.54	4.54
THC (ppmv)	0.94	0.65	18	5.06	16.35	9.12

U1-NG-RATA-Run 3 8/19/2007 13:33:06 13:54:06

Initial Linearity Test	Zero	Low	Mid	Span	L-Lin	M-Lin	S-Lin
NO (ppmv)	0	0	15.23	8.84	0	-1.12	-0.03
CO (ppmv)	0.07	0	16.27	9.24	0	-0.11	-0.15
O2 (%)	0	0	12.8	22.1	0	0.77	0
CO2 (%)	0	0	8.58	4.52	0	-0.44	0.22
THC (ppmv)	0.03	0.2	0.2	9.09	27	89.72	0.17

Initial and Final Bias and Drift	I-Zero	I-Span	F-Zero	F-Span	Z-Bias	S-Bias	Z-Drift	S-Drift
NO (ppmv)	0.07	8.72	0	8.67	0	-1.12	0.45	0.33
CO (ppmv)	0.31	9.33	0.04	9.24	-0.23	0	1.69	0.56
O2 (%)	0	22.05	0	22.07	0	-0.11	0	-0.11
CO2 (%)	0	4.48	0	4.48	0	-0.44	0	0
THC (ppmv)	0.06	9.33	0.15	9.24	0.67	0.83	-0.5	0.5

Run Results and Cal Gases Used	Raw	Corrected	Ranges	Low Gas	Mid Gas	Span Gas
NO (ppmv)	9.97	10.13	15.06	0	15.06	8.83
CO (ppmv)	0.89	0.73	16.25	0	16.25	9.22
O2 (%)	13.75	13.77	22.1	0	12.97	22.1
CO2 (%)	4.16	4.22	8.54	0	8.54	4.54
THC (ppmv)	0.73	0.62	18	5.06	16.35	9.12

Plant DeSoto, Unit CT1 - NG, Logged QA Calibration Records

U1-NG-RATA-Run 4 8/19/2007 14:09:05 14:30:05

Initial Linearity Test	Zero	Low	Mid	Span	L-Lin	M-Lin	S-Lin
NO (ppmv)	0	0	15.23	8.84	0	-1.12	-0.03
CO (ppmv)	0.07	0	16.27	9.24	0	-0.11	-0.15
O2 (%)	0	0	12.8	22.1	0	0.77	0
CO2 (%)	0	0	8.58	4.52	0	-0.44	0.22
THC (ppmv)	0.03	0.2	0.2	9.09	27	89.72	0.17

Initial and Final Bias and Drift	I-Zero	I-Span	F-Zero	F-Span	Z-Bias	S-Bias	Z-Drift	S-Drift
NO (ppmv)	0	8.67	0.03	8.65	0.22	-1.23	-0.22	0.11
CO (ppmv)	0.04	9.24	0.13	9.21	0.34	-0.23	-0.56	0.23
O2 (%)	0	22.07	0	21.95	0	-0.68	0	0.57
CO2 (%)	0	4.48	0	4.46	0	-0.67	0	0.22
THC (ppmv)	0.15	9.24	0.27	9.12	1.33	0.17	-0.67	0.67

Run Results and Cal Gases Used	Raw	Corrected	Ranges	Low Gas	Mid Gas	Span Gas
NO (ppmv)	9.93	10.13	15.06	0	15.06	8.83
CO (ppmv)	0.85	0.77	16.25	0	16.25	9.22
O2 (%)	13.68	13.74	22.1	0	12.97	22.1
CO2 (%)	4.16	4.23	8.54	0	8.54	4.54
THC (ppmv)	0.37	0.16	18	5.06	16.35	9.12

U1-NG-RATA-Run 5 8/19/2007 14:43:02 15:04:02

Initial Linearity Test	Zero	Low	Mid	Span	L-Lin	M-Lin	S-Lin
NO (ppmv)	0	0	15.23	8.84	0	-1.12	-0.03
CO (ppmv)	0.07	0	16.27	9.24	0	-0.11	-0.15
O2 (%)	0	0	12.8	22.1	0	0.77	0
CO2 (%)	0	0	8.58	4.52	0	-0.44	0.22
THC (ppmv)	0.03	0.2	0.2	9.09	27	89.72	0.17

Initial and Final Bias and Drift	I-Zero	I-Span	F-Zero	F-Span	Z-Bias	S-Bias	Z-Drift	S-Drift
NO (ppmv)	0.03	8.65	0.03	8.75	0.22	-0.56	0	-0.67
CO (ppmv)	0.13	9.21	0.27	9.23	1.24	-0.11	-0.9	-0.11
O2 (%)	0	21.95	0	21.93	0	-0.8	0	0.11
CO2 (%)	0	4.46	0	4.46	0	-0.67	0	0
THC (ppmv)	0.27	9.12	0.12	9.21	0.5	0.67	0.83	-0.5

Run Results and Cal Gases Used	Raw	Corrected	Ranges	Low Gas	Mid Gas	Span Gas
NO (ppmv)	9.97	10.12	15.06	0	15.06	8.83
CO (ppmv)	0.83	0.64	16.25	0	16.25	9.22
O2 (%)	13.63	13.73	22.1	0	12.97	22.1
CO2 (%)	4.16	4.23	8.54	0	8.54	4.54
THC (ppmv)	0.36	0.17	18	5.06	16.35	9.12

Plant DeSoto, Unit CT1 - NG, Logged QA Calibration Records

U1-NG-RATA-Run 6 8/19/2007 15:16:00 15:37:00

Initial Linearity Test	Zero	Low	Mid	Span	L-Lin	M-Lin	S-Lin
NO (ppmv)	0	0	15.23	8.84	0	-1.12	-0.03
CO (ppmv)	0.07	0	16.27	9.24	0	-0.11	-0.15
O2 (%)	0	0	12.8	22.1	0	0.77	0
CO2 (%)	0	0	8.58	4.52	0	-0.44	0.22
THC (ppmv)	0.03	0.2	0.2	9.09	27	89.72	0.17

Initial and Final Bias and Drift	I-Zero	I-Span	F-Zero	F-Span	Z-Bias	S-Bias	Z-Drift	S-Drift
NO (ppmv)	0.03	8.75	0.03	8.6	0.22	-1.56	0	1
CO (ppmv)	0.27	9.23	0.22	9.3	0.9	0.34	0.34	-0.45
O2 (%)	0	21.93	0	21.95	0	-0.68	0	-0.11
CO2 (%)	0	4.46	0	4.46	0	-0.67	0	0
THC (ppmv)	0.12	9.21	0.24	9.27	1.17	1	-0.67	-0.33

Run Results and Cal Gases Used	Raw	Corrected	Ranges	Low Gas	Mid Gas	Span Gas
NO (ppmv)	9.76	9.94	15.06	0	15.06	8.83
CO (ppmv)	0.79	0.56	16.25	0	16.25	9.22
O2 (%)	13.63	13.73	22.1	0	12.97	22.1
CO2 (%)	4.16	4.23	8.54	0	8.54	4.54
THC (ppmv)	0.61	0.43	18	5.06	16.35	9.12

U1-NG-RATA-Run 7 8/19/2007 15:52:00 16:13:00

Initial Linearity Test	Zero	Low	Mid	Span	L-Lin	M-Lin	S-Lin
NO (ppmv)	0	0	15.23	8.84	0	-1.12	-0.03
CO (ppmv)	0.07	0	16.27	9.24	0	-0.11	-0.15
O2 (%)	0	0	12.8	22.1	0	0.77	0
CO2 (%)	0	0	8.58	4.52	0	-0.44	0.22
THC (ppmv)	0.03	0.2	0.2	9.09	27	89.72	0.17

Initial and Final Bias and Drift	I-Zero	I-Span	F-Zero	F-Span	Z-Bias	S-Bias	Z-Drift	S-Drift
NO (ppmv)	0.03	8.6	0.05	8.67	0.33	-1.12	-0.11	-0.45
CO (ppmv)	0.22	9.3	0.22	9.37	0.9	0.79	0	-0.45
O2 (%)	0	21.95	0	22.02	0	-0.34	0	-0.34
CO2 (%)	0	4.46	0.02	4.46	0.22	-0.67	-0.22	0
THC (ppmv)	0.24	9.27	-0.18	9.24	-1.17	0.83	2.33	0.17

Run Results and Cal Gases Used	Raw	Corrected	Ranges	Low Gas	Mid Gas	Span Gas
NO (ppmv)	9.89	10.12	15.06	0	15.06	8.83
CO (ppmv)	1.11	0.9	16.25	0	16.25	9.22
O2 (%)	13.67	13.74	22.1	0	12.97	22.1
CO2 (%)	4.18	4.25	8.54	0	8.54	4.54
THC (ppmv)	-0.7	-0.72	18	5.06	16.35	9.12

Plant DeSoto, Unit CT1 - NG, Logged QA Calibration Records

U1-NG-RATA-Run 8 8/19/2007 16:28:15 16:49:15

Initial Linearity Test	Zero	Low	Mid	Span	L-Lin	M-Lin	S-Lin
NO (ppmv)	0	0	15.23	8.84	0	-1.12	-0.03
CO (ppmv)	0.07	0	16.27	9.24	0	-0.11	-0.15
O2 (%)	0	0	12.8	22.1	0	0.77	0
CO2 (%)	0	0	8.58	4.52	0	-0.44	0.22
THC (ppmv)	0.03	0.2	0.2	9.09	27	89.72	0.17

Initial and Final Bias and Drift	I-Zero	I-Span	F-Zero	F-Span	Z-Bias	S-Bias	Z-Drift	S-Drift
NO (ppmv)	0.05	8.67	0.05	8.67	0.33	-1.12	0	0
CO (ppmv)	0.22	9.37	0.34	9.35	1.69	0.68	-0.79	0.11
O2 (%)	0	22.02	0	22.02	0	-0.34	0	0
CO2 (%)	0.02	4.46	0.02	4.46	0.22	-0.67	0	0
THC (ppmv)	-0.18	9.24	0.21	9.27	1	1	-2.17	-0.17

Run Results and Cal Gases Used	Raw	Corrected	Ranges	Low Gas	Mid Gas	Span Gas
NO (ppmv)	10	10.19	15.06	0	15.06	8.83
CO (ppmv)	1.12	0.86	16.25	0	16.25	9.22
O2 (%)	13.71	13.76	22.1	0	12.97	22.1
CO2 (%)	4.18	4.25	8.54	0	8.54	4.54
THC (ppmv)	0.27	0.25	18	5.06	16.35	9.12

U1-NG-RATA-Run 9 8/19/2007 17:02:04 17:23:04

Initial Linearity Test	Zero	Low	Mid	Span	L-Lin	M-Lin	S-Lin
NO (ppmv)	0	0	15.23	8.84	0	-1.12	-0.03
CO (ppmv)	0.07	0	16.27	9.24	0	-0.11	-0.15
O2 (%)	0	0	12.8	22.1	0	0.77	0
CO2 (%)	0	0	8.58	4.52	0	-0.44	0.22
THC (ppmv)	0.03	0.2	0.2	9.09	27	89.72	0.17

Initial and Final Bias and Drift	I-Zero	I-Span	F-Zero	F-Span	Z-Bias	S-Bias	Z-Drift	S-Drift
NO (ppmv)	0.05	8.67	0.02	8.7	0.11	-0.89	0.22	-0.22
CO (ppmv)	0.34	9.35	0.49	9.46	2.6	1.35	-0.9	-0.68
O2 (%)	0	22.02	0.03	21.98	0.11	-0.57	-0.11	0.23
CO2 (%)	0.02	4.46	0.02	4.46	0.22	-0.67	0	0
THC (ppmv)	0.21	9.27	-0.09	9.24	-0.67	0.83	1.67	0.17

Run Results and Cal Gases Used	Raw	Corrected	Ranges	Low Gas	Mid Gas	Span Gas
NO (ppmv)	9.98	10.16	15.06	0	15.06	8.83
CO (ppmv)	1.06	0.66	16.25	0	16.25	9.22
O2 (%)	13.67	13.73	22.1	0	12.97	22.1
CO2 (%)	4.18	4.25	8.54	0	8.54	4.54
THC (ppmv)	-0.41	-0.47	18	5.06	16.35	9.12

B-2
CT2 – Natural Gas

Summary of Results
Unit CT2 Compliance Testing - Natural Gas

Company: DeSoto Generating Company, LLC
Plant: DeSoto County Energy Park
Location: Arcadia, DeSoto County, Florida
Technicians: CFF, RPO
Source: Unit 2, a General Electric Frame 7FA Combustion Turbine Generator Set

Test Number	**U2-NG-1**	**U2-NG-2**	**U2-NG-3**		
Date	8/18/2007	8/18/2007	8/18/2007		
Start Time (CEMS Time)	12:30	14:28	16:14		**FDEP**
Stop Time (CEMS Time)	14:13	15:59	17:49		**Permit**
Power Turbine Operation				***Averages***	**Limits**
Generator Output (MW, CT generated power)	156.4	156.4	157.4	***156.7***	
Barometric Pressure ("Hg)	29.86	29.83	29.82	***29.84***	
Air Inlet Duct Losses ("H_2O)	3.05	3.05	3.07	***3.06***	
Turbine Air Inlet Temperature (°F)	90.1	89.8	89.0	***89.6***	
Dewpoint Temperature (°F)	66.51	65.97	65.05	***65.84***	
Relative Humidity (% RH)	45.12	45.04	45.40	***45.19***	
Turbine Exhaust Temperature (°F)	1143.2	1142.8	1141.5	***1142.5***	
Turbine Fuel Data (Natural Gas)					
Fuel Heating Value (Btu/SCF, Gross)	1031.0	1031.0	1031.0	***1031.0***	
Fuel Specific Gravity	0.5850	0.5850	0.5850	***0.5850***	
O_2 "F_d Factor" (DSCFex/MMBtu @ 0% excess air)	8710	8710	8710	***8710***	
Turbine Gas Fuel Flow (kSCFH)	1617.15	1617.21	1622.30	***1618.89***	
Heat Input (MMBtu/hr, Higher Heating Value)	1667.3	1667.3	1672.6	***1669.1***	
Ambient Conditions					
Atmospheric Pressure ("Hg)	29.96	29.94	29.94	***29.95***	
Temperature (°F): Dry Bulb	91.0	94.0	91.0	***92.0***	
(°F): Wet Bulb	77.0	77.0	76.0	***76.7***	
Humidity (lbs moisture/lb of air)	0.0162	0.0155	0.0154	***0.0157***	
Measured Emissions					
NO_X (ppmv, dry basis)	10.77	10.84	10.85	***10.82***	
NO_X (ppmv, dry @ 15% excess O_2)	**8.8**	**8.9**	**8.8**	***8.8***	**9**
CO (ppmv, dry basis)	0.94	0.94	0.89	***0.92***	
CO (ppmv, dry @ 15% excess O_2)	**0.77**	**0.77**	**0.72**	***0.75***	**12**
THC as VOC (ppmv, wet as Methane)	0.00	0.00	0.15	***0.05***	
VOC (ppmv, dry @ 15% excess O_2)	**0.00**	**0.00**	**0.13**	***0.04***	**1.7**
VE (% opacity)			**0**	***0***	**10**
O_2 (% volume, dry basis)	13.69	13.68	13.66	***13.68***	
CO_2 (% volume, dry basis)	4.25	4.24	4.25	***4.25***	
F_o (fuel factor, range = 1.600-1.836 for NG)	1.70	1.70	1.70	***1.70***	
H_2O (% volume, stoichiometric)	9.10	8.99	8.99	***9.03***	
Stack Volumetric Flow Rates (via EPA Method 19)					
via O_2 "F_d Factor" (SCFH, dry basis)	4.29E+07	4.28E+07	4.28E+07	***4.28E+07***	
Calculated Emission Rates (via M-19 O_2 or CO_2 "F-factor")					
NO_X (lbs/hr)	**55.1**	**55.4**	**55.5**	***55.3***	**64.1 ISO**
CO (lbs/hr)	**2.93**	**2.92**	**2.76**	***2.87***	**42.5 ISO**
VOC (lbs/hr)	**0.00**	**0.00**	**0.29**	***0.10***	**2.8 ISO**

Quality Assurance Activities
Calibration Error, Bias, and Drift Checks

Linearity Check	NO_X	CO	O_2	CO_2	THC
Calibration Span (ppm), O_2 & CO_2 in %	15.06	16.25	22.10	8.54	18.00
Low Level Certified Value (ppm or % vol)	na	na	na	na	5.06
Mid Level Certified Value (ppm or % vol)	8.83	9.22	12.97	4.53	9.12
High Level Certified Value (ppm or % vol)	15.06	16.25	22.10	8.54	16.35
Zero Target (% Span)	0.0	0.0	0.0	0.0	0.0
Low Level Target (% Span)	na	na	na	na	28.1
Mid Level Target (% Span)	58.6	56.7	58.7	53.0	50.7
High Level Target (% Span)	100.0	100.0	100.0	100.0	90.8
Zero Observed (% Span)	0.2	0.0	0.0	0.0	0.0
Low Level Observed (% Span)	na	na	na	na	28.8
Mid Level Observed (% Span)	58.9	56.2	59.0	52.8	50.7
High Level Observed (% Span)	99.3	100.2	99.9	100.6	88.7
Zero Observed (ppm or % vol)	0.03	0.00	0.00	0.00	0.00
Low Level Observed (ppm or % vol)	na	na	na	na	5.19
Mid Level Observed (ppm or % vol)	8.87	9.14	13.03	4.51	9.12
High Level Observed (ppm or % vol)	14.96	16.29	22.07	8.59	15.96
% Difference From Zero to Target	0.2	0.0	0.0	0.0	0.0
% Difference From Low to Target	na	na	na	na	2.6
% Difference From Mid to Target	-0.3	0.5	-0.3	0.2	0.0
% Difference From High to Target	0.7	-0.2	0.1	-0.6	-2.4
EPA Allowable % Difference from Target	±2% Span	±2% Span	±2% Span	±2% Span	±5% Cal Gas

Run U2-NG-Stratification	NO_X	CO	O_2	CO_2	THC
Calibration Span (ppm), O_2 & CO_2 in %	15.06	16.25	22.10	8.54	18.0
Calibration Gas Certified Value (ppm or %)	8.83	9.22	22.10	4.53	9.12
Target Calibration Gas (% Span)	58.6	56.7	100.0	53.0	50.7
Actual Zero Gas from Direct (% Span)	0.2	0.0	0.0	0.0	0.0
Actual Calibration Gas from Direct (% Span)	58.9	56.2	99.9	52.8	50.7
Initial Readings					
Zero Gas (% Span)	0.3	1.0	0.0	0.2	0.0
Calibration Gas (% Span)	57.1	57.1	99.5	52.3	50.0
Zero Gas (ppmv)	0.05	0.16	0.00	0.02	0.00
Calibration Gas (ppmv)	8.60	9.28	22.00	4.47	9.00
Final Readings					
Zero Gas (% Span)	1.0	0.8	0.0	0.2	1.8
Calibration Gas (% Span)	57.1	57.1	99.5	52.6	49.5
Zero Gas (ppmv)	0.15	0.13	0.00	0.02	0.33
Calibration Gas (ppmv)	8.60	9.28	22.00	4.49	8.91
Bias and Drift Calculations					
Zero Bias (% Span) (Run-Direct Cal) ≤5%	0.8	0.8	0.0	0.2	1.8
Calibration Bias (% Span) ≤5%	-1.8	0.9	-0.3	-0.2	-1.2
Zero Drift (% Span) (Run-Run) ≤2 or 3%	-0.7	0.2	0.0	0.0	-1.8
Calibration Drift (% Span) ≤2 or 3%	0.0	0.0	0.0	-0.2	0.5
Run Results					
Raw Results (% Span)	0.0	0.0	0.0	0.0	0.0
Raw Results (ppmv or % vol)	0.00	0.00	0.00	0.00	0.00
Corrected Results (ppmv or % vol) from % Span	-0.10	-0.15	0.00	-0.02	-0.17

Run U2-NG-1A/U2-RA-1	NO_X	CO	O_2	CO_2	THC
Calibration Span (ppm), O_2 & CO_2 in %	15.06	16.25	22.10	8.54	18.0
Calibration Gas Certified Value (ppm or %)	8.83	9.22	22.10	4.53	9.12
Target Calibration Gas (% Span)	58.6	56.7	100.0	53.0	50.7
Actual Zero Gas from Direct (% Span)	0.2	0.0	0.0	0.0	0.0
Actual Calibration Gas from Direct (% Span)	58.9	56.2	99.9	52.8	28.8
Initial Readings					
Zero Gas (% Span)	1.0	0.8	0.0	0.2	1.8
Calibration Gas (% Span)	57.1	57.1	99.5	52.6	49.5
Zero Gas (ppmv)	0.15	0.13	0.00	0.02	0.33
Calibration Gas (ppmv)	8.60	9.28	22.00	4.49	8.91
Final Readings					
Zero Gas (% Span)	1.1	-0.4	0.0	0.5	1.0
Calibration Gas (% Span)	58.4	57.4	99.5	52.6	48.2
Zero Gas (ppmv)	0.17	-0.07	0.00	0.04	0.18
Calibration Gas (ppmv)	8.80	9.32	21.98	4.49	8.67
Bias and Drift Calculations					
Zero Bias (% Span) (Run-Direct Cal) ≤5%	0.9	-0.4	0.0	0.5	1.0
Calibration Bias (% Span) ≤5%	-0.5	1.1	-0.4	-0.2	19.3
Zero Drift (% Span) (Run-Run) ≤2 or 3%	-0.1	1.2	0.0	-0.2	0.8
Calibration Drift (% Span) ≤2 or 3%	-1.3	-0.2	0.1	0.0	1.3
Run Results					
Raw Results (% Span)	69.7	5.5	61.7	49.3	0.0
Raw Results (ppmv or % vol)	10.50	0.90	13.63	4.21	0.00
Corrected Results (ppmv or % vol) from % Span	10.69	0.87	13.70	4.25	-0.27

Run U2-NG-1B/U2-RA-2	NO_X	CO	O_2	CO_2	THC
Calibration Span (ppm), O_2 & CO_2 in %	15.06	16.25	22.10	8.54	18.0
Calibration Gas Certified Value (ppm or %)	8.83	9.22	22.10	4.53	9.12
Target Calibration Gas (% Span)	58.6	56.7	100.0	53.0	50.7
Actual Zero Gas from Direct (% Span)	0.2	0.0	0.0	0.0	0.0
Actual Calibration Gas from Direct (% Span)	58.9	56.2	99.9	52.8	50.7
Initial Readings					
Zero Gas (% Span)	1.1	-0.4	0.0	0.5	1.0
Calibration Gas (% Span)	58.4	57.4	99.5	52.6	48.2
Zero Gas (ppmv)	0.17	-0.07	0.00	0.04	0.18
Calibration Gas (ppmv)	8.80	9.32	21.98	4.49	8.67
Final Readings					
Zero Gas (% Span)	1.0	0.0	0.0	0.5	1.0
Calibration Gas (% Span)	57.0	59.1	99.3	52.6	48.8
Zero Gas (ppmv)	0.15	0.00	0.00	0.04	0.18
Calibration Gas (ppmv)	8.58	9.61	21.95	4.49	8.79
Bias and Drift Calculations					
Zero Bias (% Span) (Run-Direct Cal) ≤5%	0.8	0.0	0.0	0.5	1.0
Calibration Bias (% Span) ≤5%	-1.9	2.9	-0.5	-0.2	-1.8
Zero Drift (% Span) (Run-Run) ≤2 or 3%	0.1	-0.4	0.0	0.0	0.0
Calibration Drift (% Span) ≤2 or 3%	1.5	-1.8	0.1	0.0	-0.7
Run Results					
Raw Results (% Span)	70.1	5.8	61.6	49.3	2.3
Raw Results (ppmv or % vol)	10.55	0.94	13.62	4.21	0.42
Corrected Results (ppmv or % vol) from % Span	10.76	0.95	13.70	4.24	0.26

Calibration Error, Bias, and Drift Checks

Run U2-NG-1C/U2-RA-3	NO_X	CO	O_2	CO_2	THC
Calibration Span (ppm), O_2 & CO_2 in %	15.06	16.25	22.10	8.54	18.0
Calibration Gas Certified Value (ppm or %)	8.83	9.22	22.10	4.53	9.12
Target Calibration Gas (% Span)	58.6	56.7	100.0	53.0	50.7
Actual Zero Gas from Direct (% Span)	0.2	0.0	0.0	0.0	0.0
Actual Calibration Gas from Direct (% Span)	58.9	56.2	99.9	52.8	50.7
Initial Readings					
Zero Gas (% Span)	1.0	0.0	0.0	0.5	1.0
Calibration Gas (% Span)	57.0	59.1	99.3	52.6	48.8
Zero Gas (ppmv)	0.15	0.00	0.00	0.04	0.18
Calibration Gas (ppmv)	8.58	9.61	21.95	4.49	8.79
Final Readings					
Zero Gas (% Span)	1.0	-0.3	0.0	0.5	0.0
Calibration Gas (% Span)	56.6	57.5	99.5	52.3	49.5
Zero Gas (ppmv)	0.15	-0.05	0.00	0.04	0.00
Calibration Gas (ppmv)	8.52	9.35	21.98	4.47	8.91
Bias and Drift Calculations					
Zero Bias (% Span) (Run-Direct Cal) ≤5%	0.8	-0.3	0.0	0.5	0.0
Calibration Bias (% Span) ≤5%	-2.3	1.3	-0.4	-0.5	-1.2
Zero Drift (% Span) (Run-Run) ≤2 or 3%	0.0	0.3	0.0	0.0	1.0
Calibration Drift (% Span) ≤2 or 3%	0.4	1.6	-0.1	0.2	-0.7
Run Results					
Raw Results (% Span)	69.5	6.2	61.5	49.3	0.2
Raw Results (ppmv or % vol)	10.47	1.00	13.60	4.21	0.03
Corrected Results (ppmv or % vol) from % Span	10.85	0.99	13.68	4.25	-0.06

Run U2-NG-2a/RA-4	NO_X	CO	O_2	CO_2	THC
Calibration Span (ppm), O_2 & CO_2 in %	15.06	16.25	22.10	8.54	18.0
Calibration Gas Certified Value (ppm or %)	8.83	9.22	22.10	4.53	9.12
Target Calibration Gas (% Span)	58.6	56.7	100.0	53.0	50.7
Actual Zero Gas from Direct (% Span)	0.2	0.0	0.0	0.0	0.0
Actual Calibration Gas from Direct (% Span)	58.9	56.2	99.9	52.8	50.7
Initial Readings					
Zero Gas (% Span)	1.0	-0.3	0.0	0.5	0.0
Calibration Gas (% Span)	56.6	57.5	99.5	52.3	49.5
Zero Gas (ppmv)	0.15	-0.05	0.00	0.04	0.00
Calibration Gas (ppmv)	8.52	9.35	21.98	4.47	8.91
Final Readings					
Zero Gas (% Span)	0.9	-0.1	0.0	0.5	0.3
Calibration Gas (% Span)	56.8	57.1	99.5	52.6	48.7
Zero Gas (ppmv)	0.13	-0.02	0.00	0.04	0.06
Calibration Gas (ppmv)	8.55	9.28	21.98	4.49	8.76
Bias and Drift Calculations					
Zero Bias (% Span) (Run-Direct Cal) ≤5%	0.7	-0.1	0.0	0.5	0.3
Calibration Bias (% Span) ≤5%	-2.1	0.9	-0.4	-0.2	-2.0
Zero Drift (% Span) (Run-Run) ≤2 or 3%	0.1	-0.2	0.0	0.0	-0.3
Calibration Drift (% Span) ≤2 or 3%	-0.2	0.4	0.0	-0.2	0.8
Run Results					
Raw Results (% Span)	69.5	5.8	61.7	49.2	1.6
Raw Results (ppmv or % vol)	10.47	0.94	13.64	4.20	0.28
Corrected Results (ppmv or % vol) from % Span	10.87	0.96	13.71	4.24	0.26

Calibration Error, Bias, and Drift Checks

Run U2-NG-2b/RA-5	NO_X	CO	O_2	CO_2	THC
Calibration Span (ppm), O_2 & CO_2 in %	15.06	16.25	22.10	8.54	18.0
Calibration Gas Certified Value (ppm or %)	8.83	9.22	22.10	4.53	9.12
Target Calibration Gas (% Span)	58.6	56.7	100.0	53.0	50.7
Actual Zero Gas from Direct (% Span)	0.2	0.0	0.0	0.0	0.0
Actual Calibration Gas from Direct (% Span)	58.9	56.2	99.9	52.8	50.7
Initial Readings					
Zero Gas (% Span)	0.9	-0.1	0.0	0.5	0.3
Calibration Gas (% Span)	56.8	57.1	99.5	52.6	48.7
Zero Gas (ppmv)	0.13	-0.02	0.00	0.04	0.06
Calibration Gas (ppmv)	8.55	9.28	21.98	4.49	8.76
Final Readings					
Zero Gas (% Span)	0.9	-0.1	0.0	0.5	1.2
Calibration Gas (% Span)	56.4	57.2	99.5	52.3	48.3
Zero Gas (ppmv)	0.13	-0.02	0.00	0.04	0.21
Calibration Gas (ppmv)	8.50	9.30	22.00	4.47	8.70
Bias and Drift Calculations					
Zero Bias (% Span) (Run-Direct Cal) ≤5%	0.7	-0.1	0.0	0.5	1.2
Calibration Bias (% Span) ≤5%	-2.5	1.0	-0.3	-0.5	-2.3
Zero Drift (% Span) (Run-Run) ≤2 or 3%	0.0	0.0	0.0	0.0	-0.8
Calibration Drift (% Span) ≤2 or 3%	0.3	-0.1	-0.1	0.2	0.3
Run Results					
Raw Results (% Span)	69.9	5.7	61.6	49.2	0.4
Raw Results (ppmv or % vol)	10.53	0.92	13.62	4.20	0.07
Corrected Results (ppmv or % vol) from % Span	10.94	0.93	13.69	4.24	-0.07

Run U2-NG-2c/RA-6	NO_X	CO	O_2	CO_2	THC
Calibration Span (ppm), O_2 & CO_2 in %	15.06	16.25	22.10	8.54	18.0
Calibration Gas Certified Value (ppm or %)	8.83	9.22	22.10	4.53	9.12
Target Calibration Gas (% Span)	58.6	56.7	100.0	53.0	50.7
Actual Zero Gas from Direct (% Span)	0.2	0.0	0.0	0.0	0.0
Actual Calibration Gas from Direct (% Span)	58.9	56.2	99.9	52.8	50.7
Initial Readings					
Zero Gas (% Span)	0.9	-0.1	0.0	0.5	1.2
Calibration Gas (% Span)	56.4	57.2	99.5	52.3	48.3
Zero Gas (ppmv)	0.13	-0.02	0.00	0.04	0.21
Calibration Gas (ppmv)	8.50	9.30	22.00	4.47	8.70
Final Readings					
Zero Gas (% Span)	0.8	-0.2	0.0	0.5	0.2
Calibration Gas (% Span)	57.3	57.4	99.5	52.6	48.8
Zero Gas (ppmv)	0.12	-0.04	0.00	0.04	0.03
Calibration Gas (ppmv)	8.63	9.32	22.00	4.49	8.79
Bias and Drift Calculations					
Zero Bias (% Span) (Run-Direct Cal) ≤5%	0.6	-0.2	0.0	0.5	0.2
Calibration Bias (% Span) ≤5%	-1.6	1.1	-0.3	-0.2	-1.8
Zero Drift (% Span) (Run-Run) ≤2 or 3%	0.1	0.1	0.0	0.0	1.0
Calibration Drift (% Span) ≤2 or 3%	-0.9	-0.1	0.0	-0.2	-0.5
Run Results					
Raw Results (% Span)	68.8	5.5	61.5	49.3	-0.7
Raw Results (ppmv or % vol)	10.36	0.90	13.59	4.21	-0.13
Corrected Results (ppmv or % vol) from % Span	10.71	0.92	13.65	4.25	-0.26

Run U2-NG-3a/RA-7	NO_X	CO	O_2	CO_2	THC
Calibration Span (ppm), O_2 & CO_2 in %	15.06	16.25	22.10	8.54	18.0
Calibration Gas Certified Value (ppm or %)	8.83	9.22	22.10	4.53	9.12
Target Calibration Gas (% Span)	58.6	56.7	100.0	53.0	50.7
Actual Zero Gas from Direct (% Span)	0.2	0.0	0.0	0.0	0.0
Actual Calibration Gas from Direct (% Span)	58.9	56.2	99.9	52.8	50.7
Initial Readings					
Zero Gas (% Span)	0.8	-0.2	0.0	0.5	0.2
Calibration Gas (% Span)	57.3	57.4	99.5	52.6	48.8
Zero Gas (ppmv)	0.12	-0.04	0.00	0.04	0.03
Calibration Gas (ppmv)	8.63	9.32	22.00	4.49	8.79
Final Readings					
Zero Gas (% Span)	0.8	-0.1	0.0	0.5	2.0
Calibration Gas (% Span)	57.1	57.1	99.5	52.3	50.0
Zero Gas (ppmv)	0.12	-0.02	0.00	0.04	0.36
Calibration Gas (ppmv)	8.60	9.28	22.00	4.47	9.00
Bias and Drift Calculations					
Zero Bias (% Span) (Run-Direct Cal) ≤5%	0.6	-0.1	0.0	0.5	2.0
Calibration Bias (% Span) ≤5%	-1.8	0.9	-0.3	-0.5	-0.7
Zero Drift (% Span) (Run-Run) ≤2 or 3%	0.0	-0.1	0.0	0.0	-1.8
Calibration Drift (% Span) ≤2 or 3%	0.2	0.2	0.0	0.2	-1.2
Run Results					
Raw Results (% Span)	71.2	5.5	61.5	49.2	1.4
Raw Results (ppmv or % vol)	10.73	0.89	13.60	4.20	0.26
Corrected Results (ppmv or % vol) from % Span	11.03	0.91	13.66	4.24	0.07

Run U2-NG-3b/RA-8	NO_X	CO	O_2	CO_2	THC
Calibration Span (ppm), O_2 & CO_2 in %	15.06	16.25	22.10	8.54	18.0
Calibration Gas Certified Value (ppm or %)	8.83	9.22	22.10	4.53	9.12
Target Calibration Gas (% Span)	58.6	56.7	100.0	53.0	50.7
Actual Zero Gas from Direct (% Span)	0.2	0.0	0.0	0.0	0.0
Actual Calibration Gas from Direct (% Span)	58.9	56.2	99.9	52.8	50.7
Initial Readings					
Zero Gas (% Span)	0.8	-0.1	0.0	0.5	2.0
Calibration Gas (% Span)	57.1	57.1	99.5	52.3	50.0
Zero Gas (ppmv)	0.12	-0.02	0.00	0.04	0.36
Calibration Gas (ppmv)	8.60	9.28	22.00	4.47	9.00
Final Readings					
Zero Gas (% Span)	1.2	0.0	0.0	0.5	-0.5
Calibration Gas (% Span)	55.6	57.0	99.5	52.3	49.3
Zero Gas (ppmv)	0.18	0.00	0.00	0.04	-0.09
Calibration Gas (ppmv)	8.37	9.26	21.98	4.47	8.88
Bias and Drift Calculations					
Zero Bias (% Span) (Run-Direct Cal) ≤5%	1.0	0.0	0.0	0.5	-0.5
Calibration Bias (% Span) ≤5%	-3.3	0.7	-0.4	-0.5	-1.3
Zero Drift (% Span) (Run-Run) ≤2 or 3%	-0.4	-0.1	0.0	0.0	2.5
Calibration Drift (% Span) ≤2 or 3%	1.5	0.1	0.1	0.0	0.7
Run Results					
Raw Results (% Span)	67.4	5.4	61.5	49.2	2.1
Raw Results (ppmv or % vol)	10.15	0.88	13.60	4.20	0.38
Corrected Results (ppmv or % vol) from % Span	10.59	0.88	13.67	4.25	0.25

Quality Assurance Activities
Calibration Error, Bias, and Drift Checks

Run U2-NG-3c/RA-9	NO_X	CO	O_2	CO_2	THC
Calibration Span (ppm), O_2 & CO_2 in %	15.06	16.25	22.10	8.54	18.0
Calibration Gas Certified Value (ppm or %)	8.83	9.22	22.10	4.53	9.12
Target Calibration Gas (% Span)	58.6	56.7	100.0	53.0	50.7
Actual Zero Gas from Direct (% Span)	0.2	0.0	0.0	0.0	0.0
Actual Calibration Gas from Direct (% Span)	58.9	56.2	99.9	52.8	50.7
Initial Readings:					
Zero Gas (% Span)	1.2	0.0	0.0	0.5	-0.5
Calibration Gas (% Span)	55.6	57.0	99.5	52.3	49.3
Zero Gas (ppmv)	0.18	0.00	0.00	0.04	-0.09
Calibration Gas (ppmv)	8.37	9.26	21.98	4.47	8.88
Final Readings:					
Zero Gas (% Span)	1.1	0.0	0.0	0.5	0.2
Calibration Gas (% Span)	55.8	57.8	99.5	52.1	48.0
Zero Gas (ppmv)	0.17	0.00	0.00	0.04	0.03
Calibration Gas (ppmv)	8.40	9.39	21.98	4.45	8.64
Bias and Drift Calculations:					
Zero Bias (% Span) (Run-Direct Cal) ≤5%	0.9	0.0	0.0	0.5	0.2
Calibration Bias (% Span) ≤5%	-3.1	1.5	-0.4	-0.7	-2.7
Zero Drift (% Span) (Run-Run) ≤2 or 3%	0.1	0.0	0.0	0.0	-0.7
Calibration Drift (% Span) ≤2 or 3%	-0.2	-0.8	0.0	0.2	1.3
Run Results					
Raw Results (% Span)	68.7	5.4	61.5	49.2	0.6
Raw Results (ppmv or % vol)	10.35	0.88	13.59	4.20	0.10
Corrected Results (ppmv or % vol) from % Span	10.94	0.87	13.66	4.26	0.13

Plant DeSoto, Unit CT2 - NG, Logged QA Calibration Records

U2-NG-stratification start 8/18/2007 11:20:17 11:35:17

Initial Linearity Test	Zero	Low	Mid	Span	L-Lin	M-Lin	S-Lin
NOx (ppmv)	0.03	0	14.96	8.87	0	0.67	-0.26
CO (ppmv)	0	0	16.29	9.14	0	-0.23	0.52
O2 (% vol)	0	0	13.03	22.07	0	-0.25	0.11
CO2 (% vol)	0	0	8.59	4.51	0	-0.55	0.17
THC (ppmv)	0	5.19	15.96	9.12	-0.72	2.17	0

Initial and Final Bias and Drift	I-Zero	I-Span	F-Zero	F-Span	Z-Bias	S-Bias	Z-Drift	S-Drift
NOx (ppmv)	0.49	43.19	0.49	43.19	3.03	228.8	0	0
CO (ppmv)	0.13	9.59	0.13	9.59	0.79	2.82	0	0
O2 (% vol)	0.03	12.9	0.03	12.9	0.11	-41.7	0	0
CO2 (% vol)	0.06	8.43	0.06	8.43	0.67	43.5	0	0
THC (ppmv)	0.18	8.98	0.18	8.98	1	-0.75	0	0

Run Results and Cal Gases Used	Raw	Corrected	Ranges	Low Gas	Mid Gas	Span Gas
NOx (ppmv)	10.71	2.11	15.06	0	15.06	8.83
CO (ppmv)	0.81	0.66	16.25	0	16.25	9.22
O2 (% vol)	13.6	23.3	22.1	0	12.97	22.1
CO2 (% vol)	4.23	2.26	8.53	0	8.54	4.53
THC (ppmv)	0.53	0.36	18	5.06	16.35	9.12

U2-NG-stratification-end 8/18/2007 12:22:45 12:37:45

Initial Linearity Test	Zero	Low	Mid	Span	L-Lin	M-Lin	S-Lin
NOx (ppmv)	0.03	0	14.96	8.87	0	0.67	-0.26
CO (ppmv)	0	0	16.29	9.14	0	-0.23	0.52
O2 (% vol)	0	0	13.03	22.07	0	-0.25	0.11
CO2 (% vol)	0	0	8.59	4.51	0	-0.55	0.17
THC (ppmv)	0	5.19	15.96	9.12	-0.72	2.17	0

Initial and Final Bias and Drift	I-Zero	I-Span	F-Zero	F-Span	Z-Bias	S-Bias	Z-Drift	S-Drift
NOx (ppmv)	0.05	8.6	0.15	8.6	0.78	-1.78	-0.67	-0.01
CO (ppmv)	0.16	9.28	0.13	9.28	0.79	0.9	0.21	0
O2 (% vol)	0.03	22	0	22	0	-0.34	0.11	0
CO2 (% vol)	0.06	4.47	0.02	4.49	0.22	-0.22	0.44	-0.27
THC (ppmv)	0	9	0.33	8.91	1.83	-1.17	-1.83	0.5

Run Results and Cal Gases Used	Raw	Corrected	Ranges	Low Gas	Mid Gas	Span Gas
NOx (ppmv)	10.25	10.55	15.06	0	15.06	8.83
CO (ppmv)	0.68	0.54	16.25	0	16.25	9.22
O2 (% vol)	13.66	13.72	22.1	0	12.97	22.1
CO2 (% vol)	4.2	4.24	8.53	0	8.54	4.53
THC (ppmv)	0.61	0.46	18	5.06	16.35	9.12

Plant DeSoto, Unit CT2 - NG, Logged QA Calibration Records

U2-NG-RATA-run 1 8/18/2007 12:30:45 12:51:45

Initial Linearity Test	Zero	Low	Mid	Span	L-Lin	M-Lin	S-Lin
NOx (ppmv)	0.03	0	14.96	8.87	0	0.67	-0.26
CO (ppmv)	0	0	16.29	9.14	0	-0.23	0.52
O2 (% vol)	0	0	13.03	22.07	0	-0.25	0.11
CO2 (% vol)	0	0	8.59	4.51	0	-0.55	0.17
THC (ppmv)	0	5.19	15.96	9.12	-0.72	2.17	0

Initial and Final Bias and Drift	I-Zero	I-Span	F-Zero	F-Span	Z-Bias	S-Bias	Z-Drift	S-Drift
NOx (ppmv)	0.15	8.6	0.17	8.8	0.89	-0.45	-0.11	-1.34
CO (ppmv)	0.13	9.28	-0.07	9.32	-0.45	1.13	1.24	-0.23
O2 (% vol)	0	22	0	21.98	0	-0.45	0	0.11
CO2 (% vol)	0.02	4.49	0.04	4.49	0.44	-0.22	-0.22	0
THC (ppmv)	0.33	8.91	0.18	8.67	1	-2.5	0.83	1.33

Run Results and Cal Gases Used	Raw	Corrected	Ranges	Low Gas	Mid Gas	Span Gas
NOx (ppmv)	10.5	10.69	15.06	0	15.06	8.83
CO (ppmv)	0.9	0.87	16.25	0	16.25	9.22
O2 (% vol)	13.63	13.69	22.1	0	12.97	22.1
CO2 (% vol)	4.21	4.25	8.53	0	8.54	4.53
THC (ppmv)	0	-0.27	18	5.06	16.35	9.12

U2-NG-RATA-run 2 8/18/2007 13:13:09 13:34:09

Initial Linearity Test	Zero	Low	Mid	Span	L-Lin	M-Lin	S-Lin
NOx (ppmv)	0.03	0	14.96	8.87	0	0.67	-0.26
CO (ppmv)	0	0	16.29	9.14	0	-0.23	0.52
O2 (% vol)	0	0	13.03	22.07	0	-0.25	0.11
CO2 (% vol)	0	0	8.59	4.51	0	-0.55	0.17
THC (ppmv)	0	5.19	15.96	9.12	-0.72	2.17	0

Initial and Final Bias and Drift	I-Zero	I-Span	F-Zero	F-Span	Z-Bias	S-Bias	Z-Drift	S-Drift
NOx (ppmv)	0.17	8.8	0.15	8.58	0.78	-1.9	0.11	1.45
CO (ppmv)	-0.07	9.32	0	9.61	0	2.93	-0.45	-1.81
O2 (% vol)	0	21.98	0	21.95	0	-0.57	0	0.11
CO2 (% vol)	0.04	4.49	0.04	4.49	0.44	-0.22	0	0
THC (ppmv)	0.18	8.67	0.18	8.79	1	-1.83	0	-0.67

Run Results and Cal Gases Used	Raw	Corrected	Ranges	Low Gas	Mid Gas	Span Gas
NOx (ppmv)	10.55	10.75	15.06	0	15.06	8.83
CO (ppmv)	0.94	0.95	16.25	0	16.25	9.22
O2 (% vol)	13.62	13.71	22.1	0	12.97	22.1
CO2 (% vol)	4.21	4.24	8.53	0	8.54	4.53
THC (ppmv)	0.42	0.26	18	5.06	16.35	9.12

Plant DeSoto, Unit CT2 - NG, Logged QA Calibration Records

U2-NG-RATA-run 3 8/18/2007 13:51:05 14:12:05

Initial Linearity Test	Zero	Low	Mid	Span	L-Lin	M-Lin	S-Lin
NOx (ppmv)	0.03	0	14.96	8.87	0	0.67	-0.26
CO (ppmv)	0	0	16.29	9.14	0	-0.23	0.52
O2 (% vol)	0	0	13.03	22.07	0	-0.25	0.11
CO2 (% vol)	0	0	8.59	4.51	0	-0.55	0.17
THC (ppmv)	0	5.19	15.96	9.12	-0.72	2.17	0

Initial and Final Bias and Drift	I-Zero	I-Span	F-Zero	F-Span	Z-Bias	S-Bias	Z-Drift	S-Drift
NOx (ppmv)	0.15	8.58	0.15	8.52	0.78	-2.34	0	0.45
CO (ppmv)	0	9.61	-0.05	9.35	-0.34	1.35	0.34	1.58
O2 (% vol)	0	21.95	0	21.98	0	-0.45	0	-0.11
CO2 (% vol)	0.04	4.49	0.04	4.47	0.44	-0.44	0	0.22
THC (ppmv)	0.18	8.79	0	8.91	0	-1.17	1	-0.67

Run Results and Cal Gases Used	Raw	Corrected	Ranges	Low Gas	Mid Gas	Span Gas
NOx (ppmv)	10.47	10.85	15.06	0	15.06	8.83
CO (ppmv)	1	1	16.25	0	16.25	9.22
O2 (% vol)	13.6	13.69	22.1	0	12.97	22.1
CO2 (% vol)	4.21	4.25	8.53	0	8.54	4.53
THC (ppmv)	0.03	-0.06	18	5.06	16.35	9.12

U2-NG-RATA-run 4 8/18/2007 14:28:05 14:49:05

Initial Linearity Test	Zero	Low	Mid	Span	L-Lin	M-Lin	S-Lin
NOx (ppmv)	0.03	0	14.96	8.87	0	0.67	-0.26
CO (ppmv)	0	0	16.29	9.14	0	-0.23	0.52
O2 (% vol)	0	0	13.03	22.07	0	-0.25	0.11
CO2 (% vol)	0	0	8.59	4.51	0	-0.55	0.17
THC (ppmv)	0	5.19	15.96	9.12	-0.72	2.17	0

Initial and Final Bias and Drift	I-Zero	I-Span	F-Zero	F-Span	Z-Bias	S-Bias	Z-Drift	S-Drift
NOx (ppmv)	0.15	8.52	0.13	8.55	0.67	-2.12	0.11	-0.22
CO (ppmv)	-0.05	9.35	-0.02	9.28	-0.11	0.9	-0.23	0.45
O2 (% vol)	0	21.98	0	21.98	0	-0.45	0	0
CO2 (% vol)	0.04	4.47	0.04	4.49	0.44	-0.22	0	-0.22
THC (ppmv)	0	8.91	0.06	8.76	0.33	-2	-0.33	0.83

Run Results and Cal Gases Used	Raw	Corrected	Ranges	Low Gas	Mid Gas	Span Gas
NOx (ppmv)	10.47	10.86	15.06	0	15.06	8.83
CO (ppmv)	0.94	0.96	16.25	0	16.25	9.22
O2 (% vol)	13.64	13.71	22.1	0	12.97	22.1
CO2 (% vol)	4.2	4.24	8.53	0	8.54	4.53
THC (ppmv)	0.28	0.26	18	5.06	16.35	9.12

Plant DeSoto, Unit CT2 - NG, Logged QA Calibration Records

U2-NG-RATA-run 5 8/18/2007 15:03:06 15:24:06

Initial Linearity Test	Zero	Low	Mid	Span	L-Lin	M-Lin	S-Lin
NOx (ppmv)	0.03	0	14.96	8.87	0	0.67	-0.26
CO (ppmv)	0	0	16.29	9.14	0	-0.23	0.52
O2 (% vol)	0	0	13.03	22.07	0	-0.25	0.11
CO2 (% vol)	0	0	8.59	4.51	0	-0.55	0.17
THC (ppmv)	0	5.19	15.96	9.12	-0.72	2.17	0

Initial and Final Bias and Drift	I-Zero	I-Span	F-Zero	F-Span	Z-Bias	S-Bias	Z-Drift	S-Drift
NOx (ppmv)	0.13	8.55	0.13	8.5	0.67	-2.45	0	0.33
CO (ppmv)	-0.02	9.28	-0.02	9.3	-0.11	1.02	0	-0.11
O2 (% vol)	0	21.98	0	22	0	-0.34	0	-0.11
CO2 (% vol)	0.04	4.49	0.04	4.47	0.44	-0.44	0	0.22
THC (ppmv)	0.06	8.76	0.21	8.7	1.17	-2.33	-0.83	0.33

Run Results and Cal Gases Used	Raw	Corrected	Ranges	Low Gas	Mid Gas	Span Gas
NOx (ppmv)	10.53	10.94	15.06	0	15.06	8.83
CO (ppmv)	0.92	0.93	16.25	0	16.25	9.22
O2 (% vol)	13.62	13.69	22.1	0	12.97	22.1
CO2 (% vol)	4.2	4.24	8.53	0	8.54	4.53
THC (ppmv)	0.07	-0.07	18	5.06	16.35	9.12

U2-NG-RATA-run 6 8/18/2007 15:38:06 15:59:06

Initial Linearity Test	Zero	Low	Mid	Span	L-Lin	M-Lin	S-Lin
NOx (ppmv)	0.03	0	14.96	8.87	0	0.67	-0.26
CO (ppmv)	0	0	16.29	9.14	0	-0.23	0.52
O2 (% vol)	0	0	13.03	22.07	0	-0.25	0.11
CO2 (% vol)	0	0	8.59	4.51	0	-0.55	0.17
THC (ppmv)	0	5.19	15.96	9.12	-0.72	2.17	0

Initial and Final Bias and Drift	I-Zero	I-Span	F-Zero	F-Span	Z-Bias	S-Bias	Z-Drift	S-Drift
NOx (ppmv)	0.13	8.5	0.12	8.63	0.56	-1.56	0.11	-0.89
CO (ppmv)	-0.02	9.3	-0.04	9.32	-0.23	1.13	0.11	-0.11
O2 (% vol)	0	22	0	22	0	-0.34	0	0
CO2 (% vol)	0.04	4.47	0.04	4.49	0.44	-0.22	0	-0.22
THC (ppmv)	0.21	8.7	0.03	8.79	0.17	-1.83	1	-0.5

Run Results and Cal Gases Used	Raw	Corrected	Ranges	Low Gas	Mid Gas	Span Gas
NOx (ppmv)	10.36	10.7	15.06	0	15.06	8.83
CO (ppmv)	0.9	0.92	16.25	0	16.25	9.22
O2 (% vol)	13.59	13.65	22.1	0	12.97	22.1
CO2 (% vol)	4.21	4.25	8.53	0	8.54	4.53
THC (ppmv)	-0.13	-0.27	18	5.06	16.35	9.12

Plant DeSoto, Unit CT2 - NG, Logged QA Calibration Records

U2-NG-RATA-run 7 8/18/2007 16:14:05 16:35:05

Initial Linearity Test	Zero	Low	Mid	Span	L-Lin	M-Lin	S-Lin
NOx (ppmv)	0.03	0	14.96	8.87	0	0.67	-0.26
CO (ppmv)	0	0	16.29	9.14	0	-0.23	0.52
O2 (% vol)	0	0	13.03	22.07	0	-0.25	0.11
CO2 (% vol)	0	0	8.59	4.51	0	-0.55	0.17
THC (ppmv)	0	5.19	15.96	9.12	-0.72	2.17	0

Initial and Final Bias and Drift	I-Zero	I-Span	F-Zero	F-Span	Z-Bias	S-Bias	Z-Drift	S-Drift
NOx (ppmv)	0.12	8.63	0.12	8.6	0.56	-1.78	0	0.22
CO (ppmv)	-0.04	9.32	-0.04	9.28	-0.23	0.9	0	0.23
O2 (% vol)	0	22	0	22	0	-0.34	0	0
CO2 (% vol)	0.04	4.49	0.04	4.47	0.44	-0.44	0	0.22
THC (ppmv)	0.03	8.79	0.36	9	2	-0.67	-1.83	-1.17

Run Results and Cal Gases Used	Raw	Corrected	Ranges	Low Gas	Mid Gas	Span Gas
NOx (ppmv)	10.73	11.02	15.06	0	15.06	8.83
CO (ppmv)	0.89	0.92	16.25	0	16.25	9.22
O2 (% vol)	13.6	13.66	22.1	0	12.97	22.1
CO2 (% vol)	4.2	4.23	8.53	0	8.54	4.53
THC (ppmv)	0.26	0.06	18	5.06	16.35	9.12

U2-NG-RATA-run 8 8/18/2007 16:52:25 17:13:25

Initial Linearity Test	Zero	Low	Mid	Span	L-Lin	M-Lin	S-Lin
NOx (ppmv)	0.03	0	14.96	8.87	0	0.67	-0.26
CO (ppmv)	0	0	16.29	9.14	0	-0.23	0.52
O2 (% vol)	0	0	13.03	22.07	0	-0.25	0.11
CO2 (% vol)	0	0	8.59	4.51	0	-0.55	0.17
THC (ppmv)	0	5.19	15.96	9.12	-0.72	2.17	0

Initial and Final Bias and Drift	I-Zero	I-Span	F-Zero	F-Span	Z-Bias	S-Bias	Z-Drift	S-Drift
NOx (ppmv)	0.12	8.6	0.18	8.37	1	-3.35	-0.45	1.56
CO (ppmv)	-0.04	9.28	0	9.26	0	0.79	-0.23	0.11
O2 (% vol)	0	22	0	21.98	0	-0.45	0	0.11
CO2 (% vol)	0.04	4.47	0.04	4.47	0.44	-0.44	0	0
THC (ppmv)	0.36	9	-0.09	8.88	-0.5	-1.33	2.5	0.67

Run Results and Cal Gases Used	Raw	Corrected	Ranges	Low Gas	Mid Gas	Span Gas
NOx (ppmv)	10.15	10.59	15.06	0	15.06	8.83
CO (ppmv)	0.88	0.89	16.25	0	16.25	9.22
O2 (% vol)	13.6	13.67	22.1	0	12.97	22.1
CO2 (% vol)	4.2	4.24	8.53	0	8.54	4.53
THC (ppmv)	0.38	0.25	18	5.06	16.35	9.12

Plant DeSoto, Unit CT2 - NG, Logged QA Calibration Records

U2-NG-RATA-run 9 8/18/2007 17:28:12 17:49:12

Initial Linearity Test	Zero	Low	Mid	Span	L-Lin	M-Lin	S-Lin
NOx (ppmv)	0.03	0	14.96	8.87	0	0.67	-0.26
CO (ppmv)	0	0	16.29	9.14	0	-0.23	0.52
O2 (% vol)	0	0	13.03	22.07	0	-0.25	0.11
CO2 (% vol)	0	0	8.59	4.51	0	-0.55	0.17
THC (ppmv)	0	5.19	15.96	9.12	-0.72	2.17	0

Initial and Final Bias and Drift	I-Zero	I-Span	F-Zero	F-Span	Z-Bias	S-Bias	Z-Drift	S-Drift
NOx (ppmv)	0.18	8.37	0.17	8.4	0.89	-3.12	0.11	-0.22
CO (ppmv)	0	9.26	0	9.39	0	1.58	0	-0.79
O2 (% vol)	0	21.98	0	21.98	0	-0.45	0	0
CO2 (% vol)	0.04	4.47	0.04	4.45	0.44	-0.67	0	0.22
THC (ppmv)	-0.09	8.88	0.03	8.61	0.17	-2.83	-0.67	1.5

Run Results and Cal Gases Used	Raw	Corrected	Ranges	Low Gas	Mid Gas	Span Gas
NOx (ppmv)	10.35	10.95	15.06	0	15.06	8.83
CO (ppmv)	0.88	0.87	16.25	0	16.25	9.22
O2 (% vol)	13.59	13.67	22.1	0	12.97	22.1
CO2 (% vol)	4.2	4.26	8.53	0	8.54	4.53
THC (ppmv)	0.1	0.14	18	5.06	16.35	9.12

B-3
CT2 – Fuel Oil

Summary of Results
Unit CT2 Compliance Testing - Fuel Oil

Company: DeSoto Generating Company, LLC
Plant: DeSoto County Energy Park
Location: Arcadia, DeSoto County, Florida
Technicians: LJB, CDH
Source: Unit 2, a General Electric Frame 7FA Combustion Turbine Generator Set

Test Number	**U2-FO-1**	**U2-FO-2**	**U2-FO-3**		
Date	08/14/07	08/14/07	08/14/07		
Start Time (24 hour basis)	13:30	15:13	16:55		**FDEP Permit Limits**
Stop Time (24 hour basis)	14:51	16:40	18:10		
Turbine Operation				***Averages***	
Generator Output (MW, CT generated power)	167.24	167.33	167.12	***167.23***	
Barometric Pressure ("Hg)	29.73	29.71	29.71	***29.72***	
Air Inlet Duct Losses ("H_2O)	2.765	2.826	2.948	***2.846***	
Turbine Air Inlet Temperature (°F)	84.15	86.21	84.66	***85.01***	
Dewpoint Temperature (°F)	73.54	72.23	70.56	***72.11***	
Relative Humidity (% RH)	71.15	62.45	62.03	***65.21***	
Turbine Exhaust Temperature (°F)	1132.76	1133.43	1134.44	***1133.54***	
Water Injection Rates (lbs/sec)	30.770	31.151	31.221	***31.047***	
Water-to-Fuel Ratio	1.198	1.212	1.219	***1.210***	
Turbine Fuel Data					
Fuel Heating Value (Btu/lb, HHV)	19,486	19,486	19,486	***19,486***	
Fuel Density (lb/gal)	7.14	7.14	7.14	***7.14***	
O_2 "F-factor" (DSCFex/MMBtu @ 0% excess air)	9190	9190	9190	***9190***	
Fuel Flow (gallons/min)	215.899	216.012	215.182	***215.698***	
Heat Input (MMBtu/hr, Higher Heat Value)	1802.28	1803.23	1796.30	***1800.60***	
Ambient Conditions					
Atmospheric Pressure ("Hg)	29.84	29.83	29.83	***29.83***	
Temperature (°F): Dry bulb	90.0	94.8	88.2	***91.0***	
(°F): Wet bulb	81.8	81.8	78.1	***80.6***	
Humidity (lbs moisture/lb of air)	0.0210	0.0198	0.0179	***0.0196***	
Measured Emissions					
NO_X (ppmv, dry basis)	54.45	54.43	53.61	***54.16***	
NO_X (ppmv, dry @ 15% excess O_2)	**37.8**	**37.8**	**37.1**	***37.6***	**42**
NO_X (ppmv, dry @ 15% excess O_2, ISO Day)	46.5	45.2	43.0	***44.9***	
CO (ppmv, dry basis)	2.02	1.99	1.55	***1.85***	
CO (ppmv, dry @ 15% excess O_2)	**1.40**	**1.38**	**1.07**	***1.29***	**20**
THC (ppmv, wet basis as Methane)	0.42	1.24	0.86	***0.84***	
VOC (ppmv as Methane, wet @ 15% excess O_2)	**0.29**	**0.86**	**0.60**	***0.58***	**7**
O_2 (% volume, dry basis)	12.40	12.40	12.38	***12.39***	
CO_2 (% volume, dry basis)	6.44	6.41	6.44	***6.43***	
F_o (fuel factor, range = 1.260 to 1.413 for fuel oil and naphtha)	1.32	1.33	1.32	***1.32***	
H_2O (% volume)	11.03	10.84	10.56	***10.81***	
Stack Volumetric Flow Rates					
via O_2 "F_d-factor" (SCFH, dry basis)	4.07E+07	4.07E+07	4.05E+07	***4.07E+07***	
Calculated Emission Rates (via M-19 O_2 "F-factor")					
NO_X (lbs/hr)	**264.8**	**264.8**	**259.2**	***262.9***	**351 ISO**
CO (lbs/hr)	**5.98**	**5.90**	**4.56**	***5.48***	**71.4 ISO**
VOC (lbs/hr, from THC measurements)	**0.80**	**2.4**	**1.6**	***1.59***	**16.2 ISO**

Quality Assurance Activities
Calibration Error, Bias, and Drift Checks

Unit CT2

Linearity Check	NO_X	CO	O_2	CO_2	THC
Analyzer Range (ppmv), O_2 & CO_2 in % vol	109.80	16.25	22.10	8.54	18.0
Low Level Certified Value (ppm or % vol)	na	na	na	na	5.06
Mid Level Certified Value (ppm or % vol)	44.80	9.2	12.97	4.53	9.12
High Level Certified Value (ppm or % vol)	109.80	16.3	22.10	8.54	16.35
Zero Target (% Span)	0.0	0.0	0.0	0.0	0.0
Low Level Target (% Span)	na	na	na	na	28.1
Mid Level Target (% Span)	40.8	56.7	58.7	53.0	50.7
High Level Target (% Span)	100.0	100.0	100.0	100.0	90.8
Zero Observed (% Span)	0.0	0.0	0.0	0.0	0.0
Low Level Observed (% Span)	na	na	na	na	28.6
Mid Level Observed (% Span)	40.2	57.0	58.8	52.6	49.4
High Level Observed (% Span)	100.0	99.9	100.0	99.9	90.8
Zero Observed (ppm or % vol)	0.00	0.00	0.00	0.00	0.00
Low Level Observed (ppm or % vol)	na	na	na	na	5.14
Mid Level Observed (ppm or % vol)	44.16	9.26	13.00	4.49	8.90
High Level Observed (ppm or % vol)	109.80	16.23	22.10	8.53	16.35
% Difference From Zero to Target	0.0	0.0	0.0	0.0	0.0
% Difference From Low to Target	na	na	na	na	1.6
% Difference From Mid to Target	-0.6	0.2	0.1	-0.5	-2.4
% Difference From High to Target	0.0	-0.1	0.0	-0.1	0.0
EPA Allowable % Difference from Target	±2% Span	±2% Span	±2% Span	±2% Span	±5% Cal Gas
Test Run U2-FO-1	**NO_X**	**CO**	**O_2**	**CO_2**	**THC**
Analyzer Range (ppm), O_2 & CO_2 in %	109.80	16.25	22.10	8.54	18.00
Calibration Gas Certified Value (ppm or %)	44.80	9.22	12.97	8.54	9.12
Target Calibration Gas (Span %)	40.8	56.7	58.7	100.0	50.7
Actual Zero Gas from Direct (Span %)	0.0	0.0	0.0	0.0	0.0
Actual Calibration Gas from Direct (Span %)	40.2	57.0	58.8	99.9	49.4
Initial Readings					
Zero Gas (Span %)	0.1	0.1	0.0	0.0	0.0
Calibration Gas (Span %)	40.1	57.9	58.6	99.2	49.4
Zero Gas (ppmv)	0.12	0.02	0.00	0.00	0.00
Calibration Gas (ppmv)	44.04	9.41	12.95	8.47	8.90
Final Readings					
Zero Gas (Span %)	0.2	0.1	0.1	0.7	-0.1
Calibration Gas (Span %)	40.1	57.8	58.6	99.2	51.8
Zero Gas (ppmv)	0.24	0.02	0.03	0.06	-0.02
Calibration Gas (ppmv)	44.04	9.39	12.95	8.47	9.32
Bias and Drift Calculations					
Zero Bias (% Span) (Run-Direct Cal) ≤5%	0.2	0.1	0.1	0.7	-0.1
Calibration Bias (% Span) ≤5%	-0.1	0.8	-0.2	-0.7	2.3
Zero Drift (Span %) (Run-Run) ≤3%	-0.1	0.0	-0.1	-0.7	0.1
Calibration Drift (Span %) ≤3%	0.0	0.1	0.0	0.0	-2.3
Run Results					
Raw Results (Span %)	48.7	12.8	56.0	74.9	2.3
Raw Results (ppmv or % vol)	53.49	2.08	12.38	6.39	0.41
Corrected Results (ppmv or % vol)	54.45	2.02	12.40	6.44	0.42

Quality Assurance Activities
Calibration Error, Bias, and Drift Checks — Unit CT2

Test Run U2-FO-2	NO_X	CO	O_2	CO_2	THC
Analyzer Range (ppm), O_2 & CO_2 in %	109.80	16.25	22.10	8.54	18.00
Calibration Gas Certified Value (ppm or %)	44.80	9.22	12.97	8.54	9.12
Target Calibration Gas (Span %)	40.8	56.7	58.7	100.0	50.7
Actual Zero Gas from Direct (Span %)	0.0	0.0	0.0	0.0	0.0
Actual Calibration Gas from Direct (Span %)	40.2	57.0	58.8	99.9	49.4
Initial Readings					
Zero Gas (Span %)	0.2	0.1	0.1	0.7	-0.1
Calibration Gas (Span %)	40.1	57.8	58.6	99.2	51.8
Zero Gas (ppmv)	0.24	0.02	0.03	0.06	-0.02
Calibration Gas (ppmv)	44.04	9.39	12.95	8.47	9.32
Final Readings					
Zero Gas (Span %)	0.3	-0.1	0.1	0.7	0.9
Calibration Gas (Span %)	39.8	57.2	58.6	98.9	49.1
Zero Gas (ppmv)	0.37	-0.02	0.03	0.06	0.16
Calibration Gas (ppmv)	43.68	9.30	12.95	8.45	8.83
Bias and Drift Calculations					
Zero Bias (% Span) (Run-Direct Cal) ≤5%	0.3	-0.1	0.1	0.7	0.9
Calibration Bias (% Span) ≤5%	-0.4	0.2	-0.2	-0.9	-0.4
Zero Drift (Span %) (Run-Run) ≤3%	-0.1	0.2	0.0	0.0	-1.0
Calibration Drift (Span %) ≤3%	0.3	0.6	0.0	0.2	2.7
Run Results					
Raw Results (Span %)	48.5	12.4	56.0	74.6	7.2
Raw Results (ppmv or % vol)	53.22	2.02	12.38	6.37	1.30
Corrected Results (ppmv or % vol)	54.43	1.99	12.40	6.41	1.24

Test Run U2-FO-3	NO_X	CO	O_2	CO_2	THC
Analyzer Range (ppm), O_2 & CO_2 in %	109.80	16.25	22.10	8.54	18.00
Calibration Gas Certified Value (ppm or %)	44.80	9.22	12.97	8.54	9.12
Target Calibration Gas (Span %)	40.8	56.7	58.7	100.0	50.7
Actual Zero Gas from Direct (Span %)	0.0	0.0	0.0	0.0	0.0
Actual Calibration Gas from Direct (Span %)	40.2	57.0	58.8	99.9	49.4
Initial Readings					
Zero Gas (Span %)	0.3	-0.1	0.1	0.7	0.9
Calibration Gas (Span %)	39.8	57.2	58.6	98.9	49.1
Zero Gas (ppmv)	0.37	-0.02	0.03	0.06	0.16
Calibration Gas (ppmv)	43.68	9.30	12.95	8.45	8.83
Final Readings					
Zero Gas (Span %)	0.4	0.8	0.1	0.7	1.0
Calibration Gas (Span %)	39.3	59.0	58.4	98.7	49.9
Zero Gas (ppmv)	0.49	0.13	0.03	0.06	0.18
Calibration Gas (ppmv)	43.19	9.59	12.90	8.43	8.98
Bias and Drift Calculations					
Zero Bias (% Span) (Run-Direct Cal) ≤5%	0.4	0.8	0.1	0.7	1.0
Calibration Bias (% Span) ≤5%	-0.9	2.0	-0.5	-1.2	0.4
Zero Drift (Span %) (Run-Run) ≤3%	-0.1	-0.9	0.0	0.0	-0.1
Calibration Drift (Span %) ≤3%	0.4	-1.8	0.2	0.2	-0.8
Run Results					
Raw Results (Span %)	47.3	10.1	55.8	74.7	5.5
Raw Results (ppmv or % vol)	51.89	1.64	12.34	6.38	1.00
Corrected Results (ppmv or % vol)	53.61	1.55	12.38	6.44	0.86

Plant DeSoto, Unit CT2 - FO, Logged QA Calibration Records

U2-FO-Strat, SW Port 8/14/2007 13:30:00 13:45:00

Initial Linearity Test	Zero	Low	Mid	Span	L-Lin	M-Lin	S-Lin
NOx (ppmv)	0	0	109.8	44.16	0	0	0.58
CO (ppmv)	0	0	16.23	9.26	0	0.11	-0.27
O2 (% vol)	0	0	22.1	13	0	0	-0.14
CO2 (% vol)	0	0	4.49	8.53	0	0.39	0
THC (ppmv)	0	5.14	16.35	8.9	-0.42	0.02	1.2

Initial and Final Bias and Drift	I-Zero	I-Span	F-Zero	F-Span	Z-Bias	S-Bias	Z-Drift	S-Drift
NOx (ppmv)	0.12	44.04	0.12	44.04	0.11	-0.11	0	0
CO (ppmv)	0.02	9.41	0.02	9.41	0.11	0.9	0	0
O2 (% vol)	0	12.95	0	12.95	0	-0.23	0	0
CO2 (% vol)	0	8.47	0	8.47	0	-0.67	0	0
THC (ppmv)	0	8.9	0	8.9	-0.02	-0.02	0	0

Run Results and Cal Gases Used	Raw	Corrected	Ranges	Low Gas	Mid Gas	Span Gas
NOx (ppmv)	53.57	54.51	109.8	0	109.8	44.8
CO (ppmv)	1.79	1.74	16.25	0	16.25	9.22
O2 (% vol)	12.36	12.38	22.1	0	22.1	12.97
CO2 (% vol)	6.41	6.45	8.53	0	4.53	8.53
THC (ppmv)	0.15	0.15	18	5.06	16.35	9.12

U2-FO-Strat, SE Port 8/14/2007 13:50:31 14:05:31

Initial Linearity Test	Zero	Low	Mid	Span	L-Lin	M-Lin	S-Lin
NOx (ppmv)	0	0	109.8	44.16	0	0	0.58
CO (ppmv)	0	0	16.23	9.26	0	0.11	-0.27
O2 (% vol)	0	0	22.1	13	0	0	-0.14
CO2 (% vol)	0	0	4.49	8.53	0	0.39	0
THC (ppmv)	0	5.14	16.35	8.9	-0.42	0.02	1.2

Initial and Final Bias and Drift	I-Zero	I-Span	F-Zero	F-Span	Z-Bias	S-Bias	Z-Drift	S-Drift
NOx (ppmv)	0.12	44.04	0.12	44.04	0.11	-0.11	0	0
CO (ppmv)	0.02	9.41	0.02	9.41	0.11	0.9	0	0
O2 (% vol)	0	12.95	0	12.95	0	-0.23	0	0
CO2 (% vol)	0	8.47	0	8.47	0	-0.67	0	0
THC (ppmv)	0	8.9	0	8.9	-0.02	-0.02	0	0

Run Results and Cal Gases Used	Raw	Corrected	Ranges	Low Gas	Mid Gas	Span Gas
NOx (ppmv)	53.66	54.61	109.8	0	109.8	44.8
CO (ppmv)	1.71	1.66	16.25	0	16.25	9.22
O2 (% vol)	12.35	12.37	22.1	0	22.1	12.97
CO2 (% vol)	6.42	6.46	8.53	0	4.53	8.53
THC (ppmv)	0.26	0.27	18	5.06	16.35	9.12

Plant DeSoto, Unit CT2 - FO, Logged QA Calibration Records

U2-FO-Strat, NE Port 8/14/2007 14:12:09 14:27:09

Initial Linearity Test	Zero	Low	Mid	Span	L-Lin	M-Lin	S-Lin
NOx (ppmv)	0	0	109.8	44.16	0	0	0.58
CO (ppmv)	0	0	16.23	9.26	0	0.11	-0.27
O2 (% vol)	0	0	22.1	13	0	0	-0.14
CO2 (% vol)	0	0	4.49	8.53	0	0.39	0
THC (ppmv)	0	5.14	16.35	8.9	-0.42	0.02	1.2

Initial and Final Bias and Drift	I-Zero	I-Span	F-Zero	F-Span	Z-Bias	S-Bias	Z-Drift	S-Drift
NOx (ppmv)	0.12	44.04	0.12	44.04	0.11	-0.11	0	0
CO (ppmv)	0.02	9.41	0.02	9.41	0.11	0.9	0	0
O2 (% vol)	0	12.95	0	12.95	0	-0.23	0	0
CO2 (% vol)	0	8.47	0	8.47	0	-0.67	0	0
THC (ppmv)	0	8.9	0	8.9	-0.02	-0.02	0	0

Run Results and Cal Gases Used	Raw	Corrected	Ranges	Low Gas	Mid Gas	Span Gas
NOx (ppmv)	53.92	54.87	109.8	0	109.8	44.8
CO (ppmv)	3.26	3.19	16.25	0	16.25	9.22
O2 (% vol)	12.36	12.38	22.1	0	22.1	12.97
CO2 (% vol)	6.4	6.45	8.53	0	4.53	8.53
THC (ppmv)	0.48	0.49	18	5.06	16.35	9.12

U2-FO-Strat, NW Port 8/14/2007 14:36:00 14:51:00

Initial Linearity Test	Zero	Low	Mid	Span	L-Lin	M-Lin	S-Lin
NOx (ppmv)	0	0	109.8	44.16	0	0	0.58
CO (ppmv)	0	0	16.23	9.26	0	0.11	-0.27
O2 (% vol)	0	0	22.1	13	0	0	-0.14
CO2 (% vol)	0	0	4.49	8.53	0	0.39	0
THC (ppmv)	0	5.14	16.35	8.9	-0.42	0.02	1.2

Initial and Final Bias and Drift	I-Zero	I-Span	F-Zero	F-Span	Z-Bias	S-Bias	Z-Drift	S-Drift
NOx (ppmv)	0.12	44.04	0.24	44.04	0.22	-0.11	-0.11	0
CO (ppmv)	0.02	9.41	0.02	9.39	0.11	0.79	0	0.11
O2 (% vol)	0	12.95	0.03	12.95	0.11	-0.23	-0.11	0
CO2 (% vol)	0	8.47	0.06	8.47	0.67	-0.67	-0.67	0
THC (ppmv)	0	8.9	-0.02	9.32	-0.15	2.33	0.13	-2.36

Run Results and Cal Gases Used	Raw	Corrected	Ranges	Low Gas	Mid Gas	Span Gas
NOx (ppmv)	52.8	53.75	109.8	0	109.8	44.8
CO (ppmv)	1.54	1.49	16.25	0	16.25	9.22
O2 (% vol)	12.44	12.46	22.1	0	22.1	12.97
CO2 (% vol)	6.34	6.38	8.53	0	4.53	8.53
THC (ppmv)	0.74	0.75	18	5.06	16.35	9.12

Plant DeSoto, Unit CT2 - FO, Logged QA Calibration Records

U2-FO-2, SW Port 8/14/2007 15:13:02 15:28:02

Initial Linearity Test	Zero	Low	Mid	Span	L-Lin	M-Lin	S-Lin
NOx (ppmv)	0	0	109.8	44.16	0	0	0.58
CO (ppmv)	0	0	16.23	9.26	0	0.11	-0.27
O2 (% vol)	0	0	22.1	13	0	0	-0.14
CO2 (% vol)	0	0	4.49	8.53	0	0.39	0
THC (ppmv)	0	5.14	16.35	8.9	-0.42	0.02	1.2

Initial and Final Bias and Drift	I-Zero	I-Span	F-Zero	F-Span	Z-Bias	S-Bias	Z-Drift	S-Drift
NOx (ppmv)	0.24	44.04	0.24	44.04	0.22	-0.11	0	0
CO (ppmv)	0.02	9.39	0.02	9.39	0.11	0.79	0	0
O2 (% vol)	0.03	12.95	0.03	12.95	0.11	-0.23	0	0
CO2 (% vol)	0.06	8.47	0.06	8.47	0.67	-0.67	0	0
THC (ppmv)	-0.02	9.32	-0.02	9.32	-0.15	2.33	0	0

Run Results and Cal Gases Used	Raw	Corrected	Ranges	Low Gas	Mid Gas	Span Gas
NOx (ppmv)	53.68	54.66	109.8	0	109.8	44.8
CO (ppmv)	1.49	1.45	16.25	0	16.25	9.22
O2 (% vol)	12.4	12.42	22.1	0	22.1	12.97
CO2 (% vol)	6.35	6.37	8.53	0	4.53	8.53
THC (ppmv)	0.96	0.96	18	5.06	16.35	9.12

U2-FO-2, SE Port 8/14/2007 15:35:01 15:50:01

Initial Linearity Test	Zero	Low	Mid	Span	L-Lin	M-Lin	S-Lin
NOx (ppmv)	0	0	109.8	44.16	0	0	0.58
CO (ppmv)	0	0	16.23	9.26	0	0.11	-0.27
O2 (% vol)	0	0	22.1	13	0	0	-0.14
CO2 (% vol)	0	0	4.49	8.53	0	0.39	0
THC (ppmv)	0	5.14	16.35	8.9	-0.42	0.02	1.2

Initial and Final Bias and Drift	I-Zero	I-Span	F-Zero	F-Span	Z-Bias	S-Bias	Z-Drift	S-Drift
NOx (ppmv)	0.24	44.04	0.24	44.04	0.22	-0.11	0	0
CO (ppmv)	0.02	9.39	0.02	9.39	0.11	0.79	0	0
O2 (% vol)	0.03	12.95	0.03	12.95	0.11	-0.23	0	0
CO2 (% vol)	0.06	8.47	0.06	8.47	0.67	-0.67	0	0
THC (ppmv)	-0.02	9.32	-0.02	9.32	-0.15	2.33	0	0

Run Results and Cal Gases Used	Raw	Corrected	Ranges	Low Gas	Mid Gas	Span Gas
NOx (ppmv)	53.76	54.74	109.8	0	109.8	44.8
CO (ppmv)	1.73	1.69	16.25	0	16.25	9.22
O2 (% vol)	12.37	12.39	22.1	0	22.1	12.97
CO2 (% vol)	6.38	6.41	8.53	0	4.53	8.53
THC (ppmv)	1.3	1.3	18	5.06	16.35	9.12

Plant DeSoto, Unit CT2 - FO, Logged QA Calibration Records

U2-FO-2, NE Port 8/14/2007 16:05:00 16:20:00

Initial Linearity Test	Zero	Low	Mid	Span	L-Lin	M-Lin	S-Lin
NOx (ppmv)	0	0	109.8	44.16	0	0	0.58
CO (ppmv)	0	0	16.23	9.26	0	0.11	-0.27
O2 (% vol)	0	0	22.1	13	0	0	-0.14
CO2 (% vol)	0	0	4.49	8.53	0	0.39	0
THC (ppmv)	0	5.14	16.35	8.9	-0.42	0.02	1.2

Initial and Final Bias and Drift	I-Zero	I-Span	F-Zero	F-Span	Z-Bias	S-Bias	Z-Drift	S-Drift
NOx (ppmv)	0.24	44.04	0.24	44.04	0.22	-0.11	0	0
CO (ppmv)	0.02	9.39	0.02	9.39	0.11	0.79	0	0
O2 (% vol)	0.03	12.95	0.03	12.95	0.11	-0.23	0	0
CO2 (% vol)	0.06	8.47	0.06	8.47	0.67	-0.67	0	0
THC (ppmv)	-0.02	9.32	-0.02	9.32	-0.15	2.33	0	0

Run Results and Cal Gases Used	Raw	Corrected	Ranges	Low Gas	Mid Gas	Span Gas
NOx (ppmv)	53.06	54.03	109.8	0	109.8	44.8
CO (ppmv)	3.28	3.21	16.25	0	16.25	9.22
O2 (% vol)	12.36	12.38	22.1	0	22.1	12.97
CO2 (% vol)	6.39	6.42	8.53	0	4.53	8.53
THC (ppmv)	1.47	1.46	18	5.06	16.35	9.12

U2-FO-2, NW Port 8/14/2007 16:25:01 16:40:01

Initial Linearity Test	Zero	Low	Mid	Span	L-Lin	M-Lin	S-Lin
NOx (ppmv)	0	0	109.8	44.16	0	0	0.58
CO (ppmv)	0	0	16.23	9.26	0	0.11	-0.27
O2 (% vol)	0	0	22.1	13	0	0	-0.14
CO2 (% vol)	0	0	4.49	8.53	0	0.39	0
THC (ppmv)	0	5.14	16.35	8.9	-0.42	0.02	1.2

Initial and Final Bias and Drift	I-Zero	I-Span	F-Zero	F-Span	Z-Bias	S-Bias	Z-Drift	S-Drift
NOx (ppmv)	0.24	44.04	0.37	43.68	0.33	-0.44	-0.11	0.33
CO (ppmv)	0.02	9.39	-0.02	9.3	-0.11	0.23	0.23	0.56
O2 (% vol)	0.03	12.95	0.03	12.95	0.11	-0.23	0	0
CO2 (% vol)	0.06	8.47	0.06	8.45	0.67	-0.89	0	0.22
THC (ppmv)	-0.02	9.32	0.16	8.83	0.85	-0.38	-1	2.72

Run Results and Cal Gases Used	Raw	Corrected	Ranges	Low Gas	Mid Gas	Span Gas
NOx (ppmv)	52.38	53.56	109.8	0	109.8	44.8
CO (ppmv)	1.56	1.54	16.25	0	16.25	9.22
O2 (% vol)	12.4	12.42	22.1	0	22.1	12.97
CO2 (% vol)	6.35	6.39	8.53	0	4.53	8.53
THC (ppmv)	1.46	1.41	18	5.06	16.35	9.12

Plant DeSoto, Unit CT2 - FO, Logged QA Calibration Records

U2-FO-3, SW Port 8/14/2007 16:55:00 17:10:00

Initial Linearity Test	Zero	Low	Mid	Span	L-Lin	M-Lin	S-Lin
NOx (ppmv)	0	0	109.8	44.16	0	0	0.58
CO (ppmv)	0	0	16.23	9.26	0	0.11	-0.27
O2 (% vol)	0	0	22.1	13	0	0	-0.14
CO2 (% vol)	0	0	4.49	8.53	0	0.39	0
THC (ppmv)	0	5.14	16.35	8.9	-0.42	0.02	1.2

Initial and Final Bias and Drift	I-Zero	I-Span	F-Zero	F-Span	Z-Bias	S-Bias	Z-Drift	S-Drift
NOx (ppmv)	0.37	43.68	0.37	43.68	0.33	-0.44	0	0
CO (ppmv)	-0.02	9.3	-0.02	9.3	-0.11	0.23	0	0
O2 (% vol)	0.03	12.95	0.03	12.95	0.11	-0.23	0	0
CO2 (% vol)	0.06	8.45	0.06	8.45	0.67	-0.89	0	0
THC (ppmv)	0.16	8.83	0.16	8.83	0.85	-0.38	0	0

Run Results and Cal Gases Used	Raw	Corrected	Ranges	Low Gas	Mid Gas	Span Gas
NOx (ppmv)	52.44	53.86	109.8	0	109.8	44.8
CO (ppmv)	1.57	1.57	16.25	0	16.25	9.22
O2 (% vol)	12.35	12.37	22.1	0	22.1	12.97
CO2 (% vol)	6.37	6.41	8.53	0	4.53	8.53
THC (ppmv)	0.76	0.64	18	5.06	16.35	9.12

U2-FO-3, SE Port 8/14/2007 17:15:01 17:30:01

Initial Linearity Test	Zero	Low	Mid	Span	L-Lin	M-Lin	S-Lin
NOx (ppmv)	0	0	109.8	44.16	0	0	0.58
CO (ppmv)	0	0	16.23	9.26	0	0.11	-0.27
O2 (% vol)	0	0	22.1	13	0	0	-0.14
CO2 (% vol)	0	0	4.49	8.53	0	0.39	0
THC (ppmv)	0	5.14	16.35	8.9	-0.42	0.02	1.2

Initial and Final Bias and Drift	I-Zero	I-Span	F-Zero	F-Span	Z-Bias	S-Bias	Z-Drift	S-Drift
NOx (ppmv)	0.37	43.68	0.37	43.68	0.33	-0.44	0	0
CO (ppmv)	-0.02	9.3	-0.02	9.3	-0.11	0.23	0	0
O2 (% vol)	0.03	12.95	0.03	12.95	0.11	-0.23	0	0
CO2 (% vol)	0.06	8.45	0.06	8.45	0.67	-0.89	0	0
THC (ppmv)	0.16	8.83	0.16	8.83	0.85	-0.38	0	0

Run Results and Cal Gases Used	Raw	Corrected	Ranges	Low Gas	Mid Gas	Span Gas
NOx (ppmv)	52.02	53.43	109.8	0	109.8	44.8
CO (ppmv)	1.7	1.7	16.25	0	16.25	9.22
O2 (% vol)	12.32	12.33	22.1	0	22.1	12.97
CO2 (% vol)	6.4	6.45	8.53	0	4.53	8.53
THC (ppmv)	0.83	0.7	18	5.06	16.35	9.12

Plant DeSoto, Unit CT2 - FO, Logged QA Calibration Records

U2-FO-3, NE Port 8/14/2007 17:35:01 17:50:01

Initial Linearity Test	Zero	Low	Mid	Span	L-Lin	M-Lin	S-Lin
NOx (ppmv)	0	0	109.8	44.16	0	0	0.58
CO (ppmv)	0	0	16.23	9.26	0	0.11	-0.27
O2 (% vol)	0	0	22.1	13	0	0	-0.14
CO2 (% vol)	0	0	4.49	8.53	0	0.39	0
THC (ppmv)	0	5.14	16.35	8.9	-0.42	0.02	1.2

Initial and Final Bias and Drift	I-Zero	I-Span	F-Zero	F-Span	Z-Bias	S-Bias	Z-Drift	S-Drift
NOx (ppmv)	0.37	43.68	0.37	43.68	0.33	-0.44	0	0
CO (ppmv)	-0.02	9.3	-0.02	9.3	-0.11	0.23	0	0
O2 (% vol)	0.03	12.95	0.03	12.95	0.11	-0.23	0	0
CO2 (% vol)	0.06	8.45	0.06	8.45	0.67	-0.89	0	0
THC (ppmv)	0.16	8.83	0.16	8.83	0.85	-0.38	0	0

Run Results and Cal Gases Used	Raw	Corrected	Ranges	Low Gas	Mid Gas	Span Gas
NOx (ppmv)	51.97	53.37	109.8	0	109.8	44.8
CO (ppmv)	1.65	1.65	16.25	0	16.25	9.22
O2 (% vol)	12.32	12.34	22.1	0	22.1	12.97
CO2 (% vol)	6.4	6.45	8.53	0	4.53	8.53
THC (ppmv)	1.12	1.01	18	5.06	16.35	9.12

U2-FO-3, NW Port 8/14/2007 17:55:00 18:10:00

Initial Linearity Test	Zero	Low	Mid	Span	L-Lin	M-Lin	S-Lin
NOx (ppmv)	0	0	109.8	44.16	0	0	0.58
CO (ppmv)	0	0	16.23	9.26	0	0.11	-0.27
O2 (% vol)	0	0	22.1	13	0	0	-0.14
CO2 (% vol)	0	0	4.49	8.53	0	0.39	0
THC (ppmv)	0	5.14	16.35	8.9	-0.42	0.02	1.2

Initial and Final Bias and Drift	I-Zero	I-Span	F-Zero	F-Span	Z-Bias	S-Bias	Z-Drift	S-Drift
NOx (ppmv)	0.37	43.68	0.49	43.19	0.44	-0.89	-0.11	0.44
CO (ppmv)	-0.02	9.3	0.13	9.59	0.79	2.03	-0.9	-1.81
O2 (% vol)	0.03	12.95	0.03	12.9	0.11	-0.45	0	0.23
CO2 (% vol)	0.06	8.45	0.06	8.43	0.67	-1.11	0	0.22
THC (ppmv)	0.16	8.83	0.18	8.98	0.98	0.45	-0.13	-0.83

Run Results and Cal Gases Used	Raw	Corrected	Ranges	Low Gas	Mid Gas	Span Gas
NOx (ppmv)	51.14	52.83	109.8	0	109.8	44.8
CO (ppmv)	1.63	1.55	16.25	0	16.25	9.22
O2 (% vol)	12.35	12.4	22.1	0	22.1	12.97
CO2 (% vol)	6.36	6.42	8.53	0	4.53	8.53
THC (ppmv)	1.28	1.16	18	5.06	16.35	9.12

APPENDIX C
LOGGED DATA RECORDS

1. CT1 – Natural Gas
2. CT2 – Natural Gas
3. CT2 – Fuel Oil

C-1
CT1 – Natural Gas

Plant DeSoto, Unit CT1 - NG, Logged Data Records

Run Number	Date	Time	NOx (ppmv)	CO (ppmv)	O2 (%)	CO2 (%)	THC (ppmv)	AVE NOx (ppmv)	AVE CO (ppmv)	AVE O2 (%)	AVE CO2 (%)	AVE THC (ppmv)
START U1-RATA-Run 1	8/19/2007	12:21:07	10.07	0.69	13.73	4.16	-0.12	10.07	0.69	13.73	4.16	-0.12
U1-RATA-Run 1	8/19/2007	12:22:07	10.09	0.76	13.70	4.16	1.83	10.09	0.70	13.72	4.16	0.88
U1-RATA-Run 1	8/19/2007	12:23:07	10.11	0.76	13.70	4.16	0.48	10.10	0.72	13.71	4.16	0.91
U1-RATA-Run 1	8/19/2007	12:24:07	10.06	0.72	13.70	4.16	1.26	10.10	0.74	13.71	4.16	0.97
U1-RATA-Run 1	8/19/2007	12:25:07	10.12	0.76	13.70	4.16	-0.42	10.10	0.75	13.70	4.16	1.04
U1-RATA-Run 1	8/19/2007	12:26:07	9.99	0.70	13.70	4.16	1.20	10.08	0.76	13.70	4.16	1.05
U1-RATA-Run 1	8/19/2007	12:27:07	10.16	0.83	13.70	4.16	1.17	10.09	0.77	13.70	4.16	1.08
U1-RATA-Run 1	8/19/2007	12:28:07	10.09	0.83	13.73	4.16	1.02	10.09	0.78	13.71	4.16	1.07
U1-RATA-Run 1	8/19/2007	12:29:07	10.17	0.83	13.70	4.16	1.08	10.10	0.80	13.71	4.16	1.10
U1-RATA-Run 1	8/19/2007	12:30:07	10.21	0.81	13.73	4.16	0.69	10.11	0.81	13.71	4.16	1.11
U1-RATA-Run 1	8/19/2007	12:31:07	10.26	0.79	13.73	4.16	0.63	10.13	0.81	13.71	4.16	1.10
U1-RATA-Run 1	8/19/2007	12:32:07	10.19	0.81	13.73	4.16	1.59	10.14	0.81	13.71	4.16	1.13
U1-RATA-Run 1	8/19/2007	12:33:07	10.31	0.96	13.73	4.16	0.75	10.14	0.82	13.71	4.16	1.15
U1-RATA-Run 1	8/19/2007	12:34:07	10.19	0.98	13.73	4.16	1.95	10.15	0.82	13.71	4.16	1.17
U1-RATA-Run 1	8/19/2007	12:35:07	10.24	0.76	13.73	4.16	1.80	10.15	0.83	13.71	4.16	1.19
U1-RATA-Run 1	8/19/2007	12:36:07	10.22	0.92	13.75	4.16	1.80	10.16	0.83	13.72	4.16	1.21
U1-RATA-Run 1	8/19/2007	12:37:07	10.24	0.96	13.73	4.16	2.49	10.16	0.84	13.72	4.16	1.23
U1-RATA-Run 1	8/19/2007	12:38:07	10.21	0.98	13.73	4.16	1.74	10.16	0.84	13.72	4.16	1.24
U1-RATA-Run 1	8/19/2007	12:39:07	9.97	0.96	13.75	4.16	2.40	10.16	0.85	13.72	4.16	1.25
U1-RATA-Run 1	8/19/2007	12:40:07	10.01	1.03	13.73	4.16	2.10	10.15	0.85	13.72	4.16	1.27
U1-RATA-Run 1	8/19/2007	12:41:07	9.87	1.03	13.73	4.16	2.76	10.15	0.85	13.72	4.16	1.30
END U1-RATA-Run 1	8/19/2007	12:42:07	9.97	1.07	13.73	4.16	2.19	9.97	1.07	13.73	4.16	2.19
START U1-RATA-Run 2	8/19/2007	12:58:02	10.02	0.96	13.68	4.14	0.63	10.02	0.96	13.68	4.14	0.63
U1-RATA-Run 2	8/19/2007	12:59:02	10.07	0.99	13.68	4.16	1.20	10.04	0.92	13.68	4.15	0.73
U1-RATA-Run 2	8/19/2007	13:00:02	10.16	1.05	13.70	4.16	0.90	10.07	0.94	13.68	4.16	0.77
U1-RATA-Run 2	8/19/2007	13:01:02	10.27	1.05	13.68	4.16	-1.35	10.11	0.92	13.69	4.16	0.80
U1-RATA-Run 2	8/19/2007	13:02:02	10.17	1.03	13.70	4.16	0.63	10.14	0.93	13.69	4.16	0.78
U1-RATA-Run 2	8/19/2007	13:03:02	10.14	1.03	13.70	4.16	2.07	10.15	0.94	13.69	4.16	0.76
U1-RATA-Run 2	8/19/2007	13:04:02	10.09	1.03	13.70	4.16	0.90	10.15	0.95	13.69	4.16	0.78
U1-RATA-Run 2	8/19/2007	13:05:02	10.06	1.01	13.70	4.16	-1.32	10.14	0.95	13.69	4.16	0.76
U1-RATA-Run 2	8/19/2007	13:06:02	10.16	0.99	13.68	4.16	0.81	10.14	0.95	13.69	4.16	0.74
U1-RATA-Run 2	8/19/2007	13:07:02	10.26	0.87	13.70	4.16	0.84	10.15	0.95	13.69	4.16	0.74
U1-RATA-Run 2	8/19/2007	13:08:02	10.22	0.90	13.70	4.16	1.02	10.15	0.94	13.69	4.16	0.78
U1-RATA-Run 2	8/19/2007	13:09:02	10.24	0.90	13.70	4.16	1.23	10.16	0.93	13.69	4.16	0.80
U1-RATA-Run 2	8/19/2007	13:10:02	10.17	0.90	13.70	4.16	0.42	10.17	0.93	13.70	4.16	0.82
U1-RATA-Run 2	8/19/2007	13:11:02	10.31	0.94	13.73	4.14	1.35	10.17	0.92	13.70	4.16	0.85
U1-RATA-Run 2	8/19/2007	13:12:02	10.26	0.96	13.70	4.14	-0.03	10.18	0.92	13.70	4.16	0.86
U1-RATA-Run 2	8/19/2007	13:13:02	10.24	0.98	13.73	4.14	0.96	10.19	0.92	13.70	4.16	0.88
U1-RATA-Run 2	8/19/2007	13:14:02	10.02	1.05	13.70	4.16	0.78	10.18	0.91	13.70	4.16	0.88
U1-RATA-Run 2	8/19/2007	13:15:02	10.02	1.07	13.70	4.14	0.96	10.17	0.91	13.70	4.16	0.88
U1-RATA-Run 2	8/19/2007	13:16:02	10.01	0.81	13.70	4.16	0.75	10.16	0.91	13.70	4.16	0.90
U1-RATA-Run 2	8/19/2007	13:17:02	9.99	0.79	13.70	4.16	0.78	10.15	0.91	13.70	4.16	0.91
U1-RATA-Run 2	8/19/2007	13:18:02	10.02	0.36	13.70	4.16	-1.35	10.14	0.91	13.70	4.16	0.92
END U1-RATA-Run 2	8/19/2007	13:19:02	10.01	0.85	13.70	4.16	1.56	10.14	0.91	13.70	4.16	0.94

Plant DeSoto, Unit CT1 - NG, Logged Data Records

Run Number	Date	Time	NOx (ppmv)	CO (ppmv)	O2 (%)	CO2 (%)	THC (ppmv)	AVE NOx (ppmv)	AVE CO (ppmv)	AVE O2 (%)	AVE CO2 (%)	AVE THC (ppmv)
START U1-RATA-Run 3	8/19/2007	13:33:07	9.97	0.63	13.75	4.16	1.68	9.97	0.63	13.75	4.16	1.68
U1-RATA-Run 3	8/19/2007	13:34:07	10.04	0.87	13.75	4.16	0.96	9.98	0.96	13.75	4.16	1.09
U1-RATA-Run 3	8/19/2007	13:35:07	10.01	1.03	13.75	4.16	1.53	10.01	0.95	13.75	4.16	1.03
U1-RATA-Run 3	8/19/2007	13:36:07	10.07	1.08	13.75	4.16	1.11	10.02	0.95	13.75	4.16	1.04
U1-RATA-Run 3	8/19/2007	13:37:07	10.02	0.98	13.75	4.16	1.65	10.03	0.91	13.75	4.16	1.01
U1-RATA-Run 3	8/19/2007	13:38:07	10.07	0.96	13.75	4.16	1.47	10.03	0.92	13.75	4.16	0.99
U1-RATA-Run 3	8/19/2007	13:39:07	10.09	1.03	13.73	4.16	1.74	10.04	0.92	13.75	4.16	0.96
U1-RATA-Run 3	8/19/2007	13:40:07	10.04	1.08	13.73	4.16	0.69	10.04	0.92	13.75	4.16	0.92
U1-RATA-Run 3	8/19/2007	13:41:07	10.04	1.03	13.73	4.16	2.04	10.04	0.92	13.74	4.16	0.93
U1-RATA-Run 3	8/19/2007	13:42:07	10.01	0.87	13.75	4.16	0.39	10.04	0.92	13.74	4.16	0.93
U1-RATA-Run 3	8/19/2007	13:43:07	9.89	0.87	13.75	4.16	0.93	10.03	0.91	13.74	4.16	0.93
U1-RATA-Run 3	8/19/2007	13:44:07	9.91	0.85	13.75	4.16	-0.12	10.02	0.89	13.75	4.16	0.90
U1-RATA-Run 3	8/19/2007	13:45:07	9.94	0.88	13.75	4.14	0.48	10.01	0.89	13.75	4.16	0.87
U1-RATA-Run 3	8/19/2007	13:46:07	9.97	0.88	13.75	4.16	0.66	10.01	0.88	13.75	4.16	0.86
U1-RATA-Run 3	8/19/2007	13:47:07	10.02	0.85	13.75	4.16	0.69	10.01	0.88	13.75	4.16	0.84
U1-RATA-Run 3	8/19/2007	13:48:07	9.92	0.92	13.75	4.16	0.54	10.01	0.88	13.75	4.16	0.83
U1-RATA-Run 3	8/19/2007	13:49:07	9.84	0.98	13.78	4.16	0.75	10.00	0.88	13.75	4.16	0.79
U1-RATA-Run 3	8/19/2007	13:50:07	9.86	0.96	13.75	4.16	-0.12	9.99	0.88	13.75	4.16	0.78
U1-RATA-Run 3	8/19/2007	13:51:07	9.91	0.99	13.75	4.16	0.87	9.98	0.89	13.75	4.16	0.77
U1-RATA-Run 3	8/19/2007	13:52:07	9.86	0.98	13.75	4.16	-0.18	9.98	0.88	13.75	4.16	0.75
U1-RATA-Run 3	8/19/2007	13:53:07	9.84	0.98	13.75	4.16	-1.56	9.97	0.89	13.75	4.16	0.73
END U1-RATA-Run 3	8/19/2007	13:54:07	9.84	0.99	13.75	4.16	0.45	9.84	0.99	13.75	4.16	0.45
START U1-RATA-Run 4	8/19/2007	14:09:06	9.86	0.65	13.70	4.16	1.23	9.86	0.65	13.70	4.16	1.23
U1-RATA-Run 4	8/19/2007	14:10:05	9.87	1.03	13.70	4.16	0.54	9.87	0.90	13.71	4.16	0.50
U1-RATA-Run 4	8/19/2007	14:11:06	9.89	0.51	13.70	4.16	1.38	9.88	0.91	13.70	4.16	0.44
U1-RATA-Run 4	8/19/2007	14:12:06	9.91	0.98	13.73	4.16	0.81	9.87	0.88	13.70	4.16	0.46
U1-RATA-Run 4	8/19/2007	14:13:06	9.89	0.98	13.70	4.16	1.02	9.88	0.88	13.70	4.16	0.47
U1-RATA-Run 4	8/19/2007	14:14:06	9.82	1.03	13.70	4.16	1.02	9.87	0.88	13.70	4.16	0.47
U1-RATA-Run 4	8/19/2007	14:15:06	9.94	0.96	13.70	4.16	-1.35	9.87	0.89	13.70	4.16	0.46
U1-RATA-Run 4	8/19/2007	14:16:06	9.91	0.99	13.70	4.16	0.54	9.88	0.89	13.70	4.16	0.42
U1-RATA-Run 4	8/19/2007	14:17:06	10.01	0.94	13.70	4.16	0.96	9.89	0.90	13.70	4.16	0.41
U1-RATA-Run 4	8/19/2007	14:18:06	10.01	0.85	13.68	4.16	0.00	9.90	0.89	13.70	4.16	0.39
U1-RATA-Run 4	8/19/2007	14:19:06	9.99	0.81	13.68	4.16	0.42	9.91	0.88	13.70	4.16	0.38
U1-RATA-Run 4	8/19/2007	14:20:06	9.99	0.83	13.68	4.16	0.00	9.91	0.87	13.70	4.16	0.36
U1-RATA-Run 4	8/19/2007	14:21:06	9.99	0.85	13.68	4.16	0.39	9.92	0.87	13.70	4.16	0.35
U1-RATA-Run 4	8/19/2007	14:22:06	10.01	0.85	13.68	4.16	0.09	9.93	0.86	13.69	4.16	0.36
U1-RATA-Run 4	8/19/2007	14:23:06	10.01	0.85	13.68	4.16	0.54	9.93	0.86	13.69	4.16	0.35
U1-RATA-Run 4	8/19/2007	14:24:06	9.94	0.88	13.68	4.16	0.03	9.94	0.85	13.69	4.16	0.35
U1-RATA-Run 4	8/19/2007	14:25:06	9.89	0.98	13.68	4.16	0.06	9.93	0.85	13.69	4.16	0.33
U1-RATA-Run 4	8/19/2007	14:26:06	9.89	0.99	13.65	4.16	0.18	9.93	0.85	13.69	4.16	0.34
U1-RATA-Run 4	8/19/2007	14:27:06	9.94	0.99	13.65	4.16	0.39	9.93	0.85	13.69	4.16	0.35
U1-RATA-Run 4	8/19/2007	14:28:06	9.97	0.94	13.65	4.16	0.51	9.93	0.85	13.69	4.16	0.35
U1-RATA-Run 4	8/19/2007	14:29:06	9.92	1.03	13.65	4.16	0.03	9.93	0.85	13.68	4.16	0.36
END U1-RATA-Run 4	8/19/2007	14:30:06	9.96	1.03	13.65	4.16	0.12	9.96	1.03	13.65	4.16	0.12

Plant DeSoto, Unit CT1 - NG, Logged Data Records

Run Number	Date	Time	NOx (ppmv)	CO (ppmv)	O2 (%)	CO2 (%)	THC (ppmv)	AVE NOx (ppmv)	AVE CO (ppmv)	AVE O2 (%)	AVE CO2 (%)	AVE THC (ppmv)
START U1-RATA-Run 5	8/19/2007	14:43:03	9.86	0.94	13.65	4.16	1.05	9.86	0.94	13.65	4.16	1.05
U1-RATA-Run 5	8/19/2007	14:44:03	9.79	0.94	13.65	4.16	2.22	9.80	0.87	13.64	4.16	0.97
U1-RATA-Run 5	8/19/2007	14:45:03	9.81	0.96	13.63	4.16	1.20	9.81	0.85	13.64	4.16	0.93
U1-RATA-Run 5	8/19/2007	14:46:03	9.84	0.94	13.63	4.16	1.65	9.80	0.86	13.63	4.16	0.78
U1-RATA-Run 5	8/19/2007	14:47:03	9.94	0.98	13.63	4.16	1.71	9.82	0.86	13.63	4.16	0.79
U1-RATA-Run 5	8/19/2007	14:48:03	10.02	0.96	13.63	4.16	0.99	9.85	0.86	13.63	4.16	0.73
U1-RATA-Run 5	8/19/2007	14:49:03	10.06	0.94	13.63	4.16	1.08	9.89	0.86	13.63	4.16	0.69
U1-RATA-Run 5	8/19/2007	14:50:03	10.11	0.96	13.63	4.16	1.14	9.91	0.86	13.63	4.16	0.64
U1-RATA-Run 5	8/19/2007	14:51:03	10.07	1.03	13.63	4.16	0.60	9.94	0.86	13.63	4.16	0.57
U1-RATA-Run 5	8/19/2007	14:52:03	10.07	0.98	13.63	4.16	1.23	9.95	0.86	13.63	4.16	0.54
U1-RATA-Run 5	8/19/2007	14:53:03	10.06	0.98	13.60	4.16	0.51	9.96	0.86	13.63	4.16	0.49
U1-RATA-Run 5	8/19/2007	14:54:03	10.01	0.83	13.63	4.16	1.02	9.97	0.86	13.63	4.16	0.44
U1-RATA-Run 5	8/19/2007	14:55:03	10.09	0.79	13.63	4.16	1.20	9.98	0.85	13.63	4.16	0.42
U1-RATA-Run 5	8/19/2007	14:56:03	10.02	0.81	13.63	4.16	1.17	9.98	0.84	13.63	4.16	0.40
U1-RATA-Run 5	8/19/2007	14:57:03	9.96	0.81	13.63	4.16	1.14	9.98	0.83	13.63	4.16	0.39
U1-RATA-Run 5	8/19/2007	14:58:03	9.89	0.81	13.63	4.16	-1.77	9.98	0.82	13.63	4.16	0.39
U1-RATA-Run 5	8/19/2007	14:59:03	9.89	0.83	13.63	4.16	0.60	9.97	0.82	13.63	4.16	0.38
U1-RATA-Run 5	8/19/2007	15:00:03	9.92	0.92	13.63	4.16	0.24	9.97	0.82	13.63	4.16	0.38
U1-RATA-Run 5	8/19/2007	15:01:03	9.96	0.88	13.63	4.14	-0.03	9.97	0.82	13.63	4.16	0.37
U1-RATA-Run 5	8/19/2007	15:02:03	9.96	0.92	13.65	4.16	-1.95	9.97	0.82	13.63	4.16	0.37
U1-RATA-Run 5	8/19/2007	15:03:03	9.99	0.92	13.65	4.16	0.48	9.97	0.83	13.63	4.16	0.36
END U1-RATA-Run 5	8/19/2007	15:04:03	10.04	0.85	13.65	4.16	-0.39	10.04	0.85	13.65	4.16	-0.39
START U1-RATA-Run 6	8/19/2007	15:16:01	9.79	0.67	13.65	4.16	-0.06	9.79	0.67	13.65	4.16	-0.06
U1-RATA-Run 6	8/19/2007	15:17:01	9.87	0.67	13.63	4.16	0.57	9.81	0.87	13.63	4.16	0.44
U1-RATA-Run 6	8/19/2007	15:18:01	9.91	0.83	13.63	4.16	0.54	9.85	0.89	13.63	4.16	0.60
U1-RATA-Run 6	8/19/2007	15:19:01	9.86	0.87	13.63	4.16	0.09	9.85	0.88	13.63	4.16	0.58
U1-RATA-Run 6	8/19/2007	15:20:01	9.82	0.94	13.63	4.16	1.35	9.85	0.88	13.63	4.16	0.54
U1-RATA-Run 6	8/19/2007	15:21:01	9.81	0.92	13.63	4.16	0.00	9.84	0.88	13.63	4.16	0.53
U1-RATA-Run 6	8/19/2007	15:22:01	9.76	0.79	13.63	4.16	1.23	9.83	0.88	13.63	4.16	0.58
U1-RATA-Run 6	8/19/2007	15:23:01	9.74	0.96	13.63	4.16	1.02	9.82	0.88	13.63	4.16	0.58
U1-RATA-Run 6	8/19/2007	15:24:01	9.74	0.83	13.63	4.16	1.32	9.81	0.87	13.62	4.16	0.54
U1-RATA-Run 6	8/19/2007	15:25:01	9.77	0.78	13.63	4.16	1.35	9.80	0.85	13.62	4.16	0.57
U1-RATA-Run 6	8/19/2007	15:26:01	9.76	0.76	13.63	4.16	0.78	9.80	0.84	13.62	4.16	0.58
U1-RATA-Run 6	8/19/2007	15:27:01	9.71	0.79	13.63	4.16	1.02	9.79	0.83	13.62	4.16	0.59
U1-RATA-Run 6	8/19/2007	15:28:01	9.72	0.83	13.63	4.16	-1.53	9.78	0.81	13.62	4.16	0.63
U1-RATA-Run 6	8/19/2007	15:29:01	9.71	0.83	13.63	4.16	0.69	9.78	0.81	13.62	4.16	0.62
U1-RATA-Run 6	8/19/2007	15:30:01	9.77	0.83	13.63	4.16	1.38	9.77	0.81	13.62	4.16	0.64
U1-RATA-Run 6	8/19/2007	15:31:01	9.81	0.83	13.63	4.16	1.08	9.77	0.80	13.63	4.16	0.65
U1-RATA-Run 6	8/19/2007	15:32:01	9.81	0.81	13.65	4.16	1.32	9.78	0.79	13.63	4.16	0.65
U1-RATA-Run 6	8/19/2007	15:33:01	9.67	0.25	13.63	4.16	0.48	9.77	0.79	13.63	4.16	0.64
U1-RATA-Run 6	8/19/2007	15:34:01	9.69	0.69	13.65	4.16	0.81	9.77	0.79	13.63	4.16	0.63
U1-RATA-Run 6	8/19/2007	15:35:01	9.71	0.33	13.63	4.16	0.48	9.76	0.79	13.63	4.16	0.63
U1-RATA-Run 6	8/19/2007	15:36:00	9.74	0.63	13.65	4.16	0.60	9.76	0.79	13.63	4.16	0.63
END U1-RATA-Run 6	8/19/2007	15:37:01	9.74	0.33	13.63	4.16	0.30	9.74	0.33	13.63	4.16	0.30

Plant DeSoto, Unit CT1 - NG, Logged Data Records

			NOx	CO	O2	CO2	THC	AVE NOx	AVE CO	AVE O2	AVE CO2	AVE THC
Run Number	Date	Time	(ppmv)	(ppmv)	(%)	(%)	(ppmv)	(ppmv)	(ppmv)	(%)	(%)	(ppmv)
START U1-RATA-Run 7	8/19/2007	15:52:01	9.87	1.17	13.65	4.18	-0.27	9.87	1.17	13.65	4.18	-0.27
U1-RATA-Run 7	8/19/2007	15:53:01	9.91	1.07	13.65	4.18	-0.06	9.87	1.07	13.65	4.18	-0.92
U1-RATA-Run 7	8/19/2007	15:54:01	9.89	0.94	13.65	4.18	-0.72	9.89	1.09	13.65	4.18	-0.86
U1-RATA-Run 7	8/19/2007	15:55:01	9.86	1.23	13.65	4.18	-0.72	9.88	1.08	13.65	4.18	-0.81
U1-RATA-Run 7	8/19/2007	15:56:01	9.86	1.14	13.65	4.18	-0.84	9.88	1.10	13.65	4.18	-0.78
U1-RATA-Run 7	8/19/2007	15:57:01	9.82	1.21	13.65	4.18	-0.12	9.87	1.11	13.65	4.18	-0.75
U1-RATA-Run 7	8/19/2007	15:58:01	9.87	0.99	13.65	4.18	-0.24	9.86	1.11	13.65	4.18	-0.71
U1-RATA-Run 7	8/19/2007	15:59:01	9.86	0.96	13.65	4.18	-1.68	9.86	1.12	13.65	4.18	-0.70
U1-RATA-Run 7	8/19/2007	16:00:01	9.96	1.01	13.65	4.18	-1.38	9.87	1.11	13.65	4.18	-0.73
U1-RATA-Run 7	8/19/2007	16:01:01	9.96	0.87	13.65	4.18	-0.51	9.88	1.09	13.65	4.18	-0.74
U1-RATA-Run 7	8/19/2007	16:02:01	9.92	1.10	13.68	4.16	-3.48	9.88	1.09	13.65	4.18	-0.73
U1-RATA-Run 7	8/19/2007	16:03:01	9.89	1.10	13.68	4.18	0.12	9.89	1.08	13.66	4.18	-0.71
U1-RATA-Run 7	8/19/2007	16:04:01	9.94	1.10	13.68	4.18	-1.14	9.89	1.08	13.66	4.18	-0.71
U1-RATA-Run 7	8/19/2007	16:05:01	9.91	1.08	13.68	4.18	-0.06	9.89	1.08	13.66	4.18	-0.70
U1-RATA-Run 7	8/19/2007	16:06:01	9.87	0.74	13.68	4.18	-0.45	9.89	1.08	13.66	4.18	-0.70
U1-RATA-Run 7	8/19/2007	16:07:01	9.86	1.21	13.68	4.18	-0.45	9.89	1.08	13.66	4.18	-0.71
U1-RATA-Run 7	8/19/2007	16:08:01	9.81	1.28	13.70	4.16	-0.06	9.89	1.08	13.66	4.18	-0.70
U1-RATA-Run 7	8/19/2007	16:09:01	9.89	1.23	13.68	4.18	-0.84	9.89	1.08	13.66	4.18	-0.69
U1-RATA-Run 7	8/19/2007	16:10:01	9.91	1.19	13.70	4.16	-3.24	9.89	1.09	13.66	4.18	-0.70
U1-RATA-Run 7	8/19/2007	16:11:01	9.94	1.39	13.70	4.16	0.09	9.89	1.09	13.67	4.18	-0.70
U1-RATA-Run 7	8/19/2007	16:12:01	9.84	1.21	13.70	4.18	-0.51	9.89	1.10	13.67	4.18	-0.71
END U1-RATA-Run 7	8/19/2007	16:13:01	9.91	1.10	13.70	4.18	-1.02	9.91	1.10	13.70	4.18	-1.02
START U1-RATA-Run 8	8/19/2007	16:28:16	9.86	1.17	13.73	4.18	0.57	9.86	1.17	13.73	4.18	0.57
U1-RATA-Run 8	8/19/2007	16:29:16	9.92	1.14	13.73	4.18	0.54	9.89	1.26	13.72	4.18	0.47
U1-RATA-Run 8	8/19/2007	16:30:16	9.97	1.28	13.73	4.18	0.03	9.93	1.26	13.72	4.18	0.30
U1-RATA-Run 8	8/19/2007	16:31:16	10.01	1.25	13.73	4.18	0.99	9.95	1.25	13.72	4.18	0.31
U1-RATA-Run 8	8/19/2007	16:32:16	10.04	1.25	13.73	4.18	0.60	9.97	1.24	13.72	4.18	0.34
U1-RATA-Run 8	8/19/2007	16:33:16	10.02	1.19	13.73	4.18	0.96	9.98	1.23	13.72	4.18	0.36
U1-RATA-Run 8	8/19/2007	16:34:16	10.04	1.17	13.70	4.18	-2.04	9.99	1.23	13.72	4.18	0.37
U1-RATA-Run 8	8/19/2007	16:35:16	10.09	1.21	13.70	4.18	0.27	10.00	1.22	13.72	4.18	0.36
U1-RATA-Run 8	8/19/2007	16:36:16	10.07	0.92	13.73	4.18	0.21	10.01	1.22	13.72	4.18	0.37
U1-RATA-Run 8	8/19/2007	16:37:16	10.07	1.12	13.73	4.18	0.21	10.01	1.20	13.72	4.18	0.34
U1-RATA-Run 8	8/19/2007	16:38:16	10.07	1.10	13.70	4.18	-1.92	10.02	1.18	13.72	4.18	0.34
U1-RATA-Run 8	8/19/2007	16:39:16	10.02	1.05	13.70	4.18	0.06	10.02	1.17	13.72	4.18	0.33
U1-RATA-Run 8	8/19/2007	16:40:16	10.07	1.10	13.70	4.18	0.48	10.03	1.16	13.72	4.18	0.33
U1-RATA-Run 8	8/19/2007	16:41:16	10.07	1.17	13.70	4.18	0.84	10.03	1.15	13.71	4.18	0.32
U1-RATA-Run 8	8/19/2007	16:42:16	10.01	1.19	13.70	4.18	0.63	10.03	1.14	13.71	4.18	0.31
U1-RATA-Run 8	8/19/2007	16:43:16	9.89	0.98	13.70	4.16	0.54	10.03	1.13	13.71	4.18	0.31
U1-RATA-Run 8	8/19/2007	16:44:16	9.96	1.01	13.70	4.18	0.00	10.02	1.13	13.71	4.18	0.31
U1-RATA-Run 8	8/19/2007	16:45:16	9.94	1.16	13.70	4.16	0.45	10.01	1.13	13.71	4.18	0.30
U1-RATA-Run 8	8/19/2007	16:46:16	9.97	1.16	13.70	4.18	0.60	10.01	1.12	13.71	4.18	0.29
U1-RATA-Run 8	8/19/2007	16:47:16	9.92	1.17	13.70	4.18	0.21	10.01	1.12	13.71	4.18	0.27
U1-RATA-Run 8	8/19/2007	16:48:16	9.92	1.16	13.70	4.18	0.81	10.00	1.12	13.71	4.18	0.27
END U1-RATA-Run 8	8/19/2007	16:49:16	9.92	1.16	13.70	4.18	0.75	9.92	1.16	13.70	4.18	0.75

Plant DeSoto, Unit CT1 - NG, Logged Data Records

Run Number	Date	Time	NOx (ppmv)	CO (ppmv)	O2 (%)	CO2 (%)	THC (ppmv)	AVE NOx (ppmv)	AVE CO (ppmv)	AVE O2 (%)	AVE CO2 (%)	AVE THC (ppmv)
START U1-RATA-Run 9	8/19/2007	17:02:05	9.91	1.08	13.68	4.16	0.24	9.91	1.08	13.68	4.16	0.24
U1-RATA-Run 9	8/19/2007	17:03:05	10.01	1.08	13.68	4.18	0.21	9.93	1.08	13.68	4.18	-0.05
U1-RATA-Run 9	8/19/2007	17:04:05	10.07	1.19	13.68	4.18	0.42	9.98	1.08	13.68	4.17	-0.09
U1-RATA-Run 9	8/19/2007	17:05:05	10.02	1.07	13.68	4.18	0.87	10.00	1.08	13.68	4.17	-0.13
U1-RATA-Run 9	8/19/2007	17:06:05	10.06	1.12	13.68	4.18	0.06	10.01	1.08	13.68	4.17	-0.13
U1-RATA-Run 9	8/19/2007	17:07:05	10.01	1.05	13.68	4.16	0.42	10.02	1.08	13.68	4.18	-0.18
U1-RATA-Run 9	8/19/2007	17:08:05	10.02	0.98	13.68	4.18	-0.12	10.02	1.08	13.68	4.18	-0.18
U1-RATA-Run 9	8/19/2007	17:09:05	10.02	0.87	13.68	4.18	-0.15	10.02	1.08	13.68	4.18	-0.21
U1-RATA-Run 9	8/19/2007	17:10:05	9.97	0.94	13.68	4.18	-0.96	10.02	1.08	13.68	4.18	-0.22
U1-RATA-Run 9	8/19/2007	17:11:05	10.01	1.14	13.68	4.18	-0.69	10.02	1.08	13.68	4.18	-0.24
U1-RATA-Run 9	8/19/2007	17:12:05	9.96	1.12	13.65	4.18	-0.81	10.01	1.08	13.68	4.18	-0.27
U1-RATA-Run 9	8/19/2007	17:13:05	10.01	1.03	13.68	4.18	-0.39	10.01	1.08	13.68	4.18	-0.30
U1-RATA-Run 9	8/19/2007	17:14:05	9.99	0.88	13.65	4.18	-0.57	10.01	1.06	13.67	4.18	-0.33
U1-RATA-Run 9	8/19/2007	17:15:05	9.96	0.94	13.68	4.18	-0.93	10.01	1.06	13.67	4.18	-0.36
U1-RATA-Run 9	8/19/2007	17:16:05	9.96	0.96	13.65	4.18	-0.63	10.00	1.05	13.67	4.18	-0.38
U1-RATA-Run 9	8/19/2007	17:17:05	9.86	0.96	13.68	4.18	-1.26	10.00	1.04	13.67	4.18	-0.40
U1-RATA-Run 9	8/19/2007	17:18:05	9.91	1.10	13.68	4.18	-0.84	9.99	1.04	13.67	4.18	-0.40
U1-RATA-Run 9	8/19/2007	17:19:05	9.97	1.16	13.65	4.16	0.09	9.99	1.05	13.67	4.18	-0.41
U1-RATA-Run 9	8/19/2007	17:20:05	9.96	1.16	13.65	4.18	-0.09	9.99	1.05	13.67	4.18	-0.40
U1-RATA-Run 9	8/19/2007	17:21:05	9.91	0.98	13.65	4.16	0.48	9.98	1.05	13.67	4.18	-0.40
U1-RATA-Run 9	8/19/2007	17:22:05	9.99	1.16	13.68	4.18	-0.36	9.98	1.06	13.67	4.18	-0.41
END U1-RATA-Run 9	8/19/2007	17:23:05	10.09	1.10	13.68	4.16	-0.18	10.09	1.10	13.68	4.16	-0.18

C-2
CT2 – Natural Gas

Plant DeSoto, Unit CT2 - NG, Logged Data Records

Run Number	Date	Time	NOx (ppmv)	CO (ppmv)	O2 (%)	CO2 (%)	THC (ppmv)	AVE NOx (ppmv)	AVE CO (ppmv)	AVE O2 (%)	AVE CO2 (%)	AVE THC (ppmv)
START U2-NG-RATA-run 1	8/18/2007	12:30:45	10.48	0.78	13.63	4.22	0.00	10.48	0.78	13.63	4.22	0.00
U2-NG-RATA-run 1	8/18/2007	12:31:45	10.48	0.74	13.63	4.22	0.00	10.45	0.78	13.63	4.22	-0.01
U2-NG-RATA-run 1	8/18/2007	12:32:45	10.41	0.81	13.63	4.22	0.00	10.44	0.77	13.63	4.22	-0.01
U2-NG-RATA-run 1	8/18/2007	12:33:45	10.39	0.87	13.63	4.22	0.00	10.43	0.78	13.63	4.22	-0.01
U2-NG-RATA-run 1	8/18/2007	12:34:45	10.42	0.79	13.63	4.22	0.03	10.42	0.79	13.63	4.22	0.00
U2-NG-RATA-run 1	8/18/2007	12:35:45	10.49	0.79	13.63	4.22	0.09	10.42	0.79	13.63	4.22	0.01
U2-NG-RATA-run 1	8/18/2007	12:36:45	10.44	0.74	13.63	4.22	0.09	10.43	0.79	13.63	4.22	0.02
U2-NG-RATA-run 1	8/18/2007	12:37:45	10.71	0.85	13.63	4.18	0.09	10.44	0.79	13.63	4.21	0.03
U2-NG-RATA-run 1	8/18/2007	12:38:45	10.54	0.94	13.63	4.22	0.03	10.47	0.80	13.63	4.21	0.04
U2-NG-RATA-run 1	8/18/2007	12:39:45	10.51	0.96	13.63	4.22	0.00	10.47	0.81	13.63	4.21	0.04
U2-NG-RATA-run 1	8/18/2007	12:40:45	10.44	0.96	13.63	4.22	0.00	10.48	0.83	13.63	4.21	0.03
U2-NG-RATA-run 1	8/18/2007	12:41:45	10.56	0.92	13.63	4.22	-0.06	10.48	0.84	13.63	4.21	0.02
U2-NG-RATA-run 1	8/18/2007	12:42:45	10.56	0.98	13.63	4.22	-0.09	10.48	0.85	13.63	4.21	0.02
U2-NG-RATA-run 1	8/18/2007	12:43:45	10.59	0.94	13.63	4.22	-0.03	10.49	0.86	13.63	4.21	0.01
U2-NG-RATA-run 1	8/18/2007	12:44:45	10.63	0.94	13.63	4.22	-0.03	10.50	0.86	13.63	4.21	0.00
U2-NG-RATA-run 1	8/18/2007	12:45:45	10.58	0.98	13.63	4.22	0.00	10.51	0.87	13.63	4.21	0.00
U2-NG-RATA-run 1	8/18/2007	12:46:45	10.54	0.94	13.63	4.24	0.00	10.51	0.88	13.63	4.21	0.00
U2-NG-RATA-run 1	8/18/2007	12:47:45	10.48	0.99	13.60	4.22	0.00	10.51	0.88	13.63	4.21	0.00
U2-NG-RATA-run 1	8/18/2007	12:48:45	10.46	0.96	13.63	4.22	0.00	10.51	0.89	13.63	4.21	0.00
U2-NG-RATA-run 1	8/18/2007	12:49:45	10.48	0.94	13.63	4.22	-0.03	10.51	0.89	13.63	4.21	0.00
U2-NG-RATA-run 1	8/18/2007	12:50:45	10.48	1.01	13.63	4.24	-0.03	10.50	0.90	13.63	4.21	0.00
END U2-NG-RATA-run 1	8/18/2007	12:51:45	10.42	0.98	13.63	4.22	0.00	10.50	0.90	13.63	4.21	0.00
START U2-NG-RATA-run 2	8/18/2007	13:13:10	10.42	0.92	13.65	4.20	0.36	10.42	0.92	13.65	4.20	0.36
U2-NG-RATA-run 2	8/18/2007	13:14:10	10.56	0.94	13.63	4.22	0.39	10.51	0.96	13.63	4.20	0.37
U2-NG-RATA-run 2	8/18/2007	13:15:10	10.58	0.92	13.63	4.22	0.42	10.54	0.96	13.63	4.21	0.38
U2-NG-RATA-run 2	8/18/2007	13:16:10	10.59	0.88	13.63	4.22	0.42	10.55	0.95	13.63	4.21	0.39
U2-NG-RATA-run 2	8/18/2007	13:17:10	10.63	0.92	13.63	4.22	0.42	10.56	0.95	13.63	4.21	0.40
U2-NG-RATA-run 2	8/18/2007	13:18:10	10.68	0.99	13.63	4.22	0.39	10.58	0.95	13.63	4.21	0.40
U2-NG-RATA-run 2	8/18/2007	13:19:10	10.64	0.94	13.63	4.22	0.45	10.60	0.95	13.63	4.21	0.41
U2-NG-RATA-run 2	8/18/2007	13:20:10	10.64	0.92	13.63	4.22	0.48	10.60	0.95	13.63	4.21	0.42
U2-NG-RATA-run 2	8/18/2007	13:21:10	10.53	0.90	13.63	4.22	0.51	10.60	0.95	13.63	4.21	0.43
U2-NG-RATA-run 2	8/18/2007	13:22:10	10.53	0.98	13.63	4.22	0.48	10.59	0.94	13.63	4.21	0.43
U2-NG-RATA-run 2	8/18/2007	13:23:10	10.54	0.94	13.63	4.22	0.54	10.58	0.94	13.63	4.21	0.44
U2-NG-RATA-run 2	8/18/2007	13:24:10	10.51	0.98	13.63	4.22	0.51	10.58	0.94	13.63	4.21	0.45
U2-NG-RATA-run 2	8/18/2007	13:25:10	10.53	0.98	13.63	4.22	0.54	10.58	0.94	13.63	4.21	0.45
U2-NG-RATA-run 2	8/18/2007	13:26:10	10.53	0.98	13.63	4.22	0.51	10.57	0.94	13.63	4.21	0.46
U2-NG-RATA-run 2	8/18/2007	13:27:10	10.46	0.98	13.63	4.22	0.45	10.57	0.94	13.63	4.21	0.46
U2-NG-RATA-run 2	8/18/2007	13:28:10	10.44	0.98	13.63	4.22	0.39	10.56	0.94	13.63	4.21	0.46
U2-NG-RATA-run 2	8/18/2007	13:29:10	10.49	0.94	13.63	4.22	0.30	10.55	0.94	13.63	4.21	0.45
U2-NG-RATA-run 2	8/18/2007	13:30:10	10.48	0.96	13.63	4.22	0.27	10.55	0.94	13.62	4.21	0.44
U2-NG-RATA-run 2	8/18/2007	13:31:10	10.49	0.96	13.60	4.22	0.30	10.55	0.94	13.62	4.21	0.43
U2-NG-RATA-run 2	8/18/2007	13:32:10	10.51	0.87	13.60	4.22	0.36	10.55	0.94	13.62	4.21	0.42
U2-NG-RATA-run 2	8/18/2007	13:33:10	10.56	0.94	13.60	4.22	0.42	10.54	0.94	13.62	4.21	0.42
END U2-NG-RATA-run 2	8/18/2007	13:34:10	10.58	0.96	13.63	4.22	0.39	10.55	0.94	13.62	4.21	0.42

Plant DeSoto, Unit CT2 - NG, Logged Data Records

Run Number	Date	Time	NOx (ppmv)	CO (ppmv)	O2 (%)	CO2 (%)	THC (ppmv)	AVE NOx (ppmv)	AVE CO (ppmv)	AVE O2 (%)	AVE CO2 (%)	AVE THC (ppmv)
START U2-NG-RATA-run 3	8/18/2007	13:51:05	10.49	1.03	13.60	4.22	0.09	10.49	1.03	13.60	4.22	0.09
U2-NG-RATA-run 3	8/18/2007	13:52:05	10.51	0.99	13.60	4.22	0.09	10.48	1.00	13.62	4.21	0.09
U2-NG-RATA-run 3	8/18/2007	13:53:05	10.51	1.01	13.60	4.22	0.03	10.50	1.01	13.61	4.21	0.08
U2-NG-RATA-run 3	8/18/2007	13:54:05	10.49	0.99	13.60	4.22	0.00	10.50	1.01	13.61	4.21	0.05
U2-NG-RATA-run 3	8/18/2007	13:55:05	10.49	0.99	13.60	4.22	0.00	10.50	1.01	13.61	4.21	0.04
U2-NG-RATA-run 3	8/18/2007	13:56:05	10.44	0.99	13.60	4.22	-0.03	10.49	1.01	13.61	4.21	0.03
U2-NG-RATA-run 3	8/18/2007	13:57:05	10.42	0.94	13.60	4.22	0.00	10.48	1.01	13.60	4.21	0.02
U2-NG-RATA-run 3	8/18/2007	13:58:05	10.41	1.01	13.60	4.22	0.03	10.47	1.00	13.60	4.21	0.02
U2-NG-RATA-run 3	8/18/2007	13:59:05	10.41	1.05	13.60	4.22	0.03	10.47	1.00	13.60	4.21	0.03
U2-NG-RATA-run 3	8/18/2007	14:00:05	10.46	1.01	13.60	4.22	0.03	10.46	1.00	13.60	4.21	0.03
U2-NG-RATA-run 3	8/18/2007	14:01:05	10.49	1.08	13.60	4.22	0.03	10.47	1.00	13.60	4.21	0.03
U2-NG-RATA-run 3	8/18/2007	14:02:05	10.46	1.05	13.60	4.22	0.06	10.46	1.00	13.60	4.21	0.03
U2-NG-RATA-run 3	8/18/2007	14:03:05	10.44	0.98	13.60	4.22	0.06	10.47	1.00	13.60	4.21	0.03
U2-NG-RATA-run 3	8/18/2007	14:04:05	10.39	1.07	13.60	4.22	0.09	10.46	1.00	13.60	4.21	0.03
U2-NG-RATA-run 3	8/18/2007	14:05:05	10.48	0.98	13.60	4.22	0.06	10.46	1.00	13.60	4.21	0.04
U2-NG-RATA-run 3	8/18/2007	14:06:05	10.63	0.96	13.63	4.22	0.03	10.47	1.00	13.60	4.21	0.04
U2-NG-RATA-run 3	8/18/2007	14:07:05	10.51	0.99	13.60	4.22	0.00	10.47	1.00	13.60	4.21	0.03
U2-NG-RATA-run 3	8/18/2007	14:08:05	10.46	1.03	13.60	4.22	0.00	10.47	1.00	13.60	4.21	0.03
U2-NG-RATA-run 3	8/18/2007	14:09:05	10.48	1.01	13.60	4.22	0.00	10.47	1.00	13.60	4.21	0.03
U2-NG-RATA-run 3	8/18/2007	14:10:05	10.39	1.01	13.60	4.22	0.03	10.47	1.00	13.60	4.21	0.03
U2-NG-RATA-run 3	8/18/2007	14:11:05	10.46	1.01	13.60	4.22	0.00	10.47	1.00	13.60	4.21	0.03
END U2-NG-RATA-run 3	8/18/2007	14:12:05	10.46	0.98	13.63	4.22	0.00	10.47	1.00	13.60	4.21	0.03
START U2-NG-RATA-run 4	8/18/2007	14:28:06	10.46	0.99	13.65	4.20	0.33	10.46	0.99	13.65	4.20	0.33
U2-NG-RATA-run 4	8/18/2007	14:29:06	10.44	0.90	13.65	4.20	0.39	10.44	0.93	13.65	4.20	0.34
U2-NG-RATA-run 4	8/18/2007	14:30:06	10.41	0.96	13.65	4.20	0.39	10.43	0.92	13.65	4.20	0.37
U2-NG-RATA-run 4	8/18/2007	14:31:06	10.44	0.96	13.65	4.20	0.42	10.43	0.93	13.65	4.20	0.38
U2-NG-RATA-run 4	8/18/2007	14:32:06	10.41	1.01	13.63	4.20	0.39	10.43	0.94	13.65	4.20	0.39
U2-NG-RATA-run 4	8/18/2007	14:33:06	10.44	0.96	13.63	4.20	0.36	10.43	0.94	13.65	4.20	0.39
U2-NG-RATA-run 4	8/18/2007	14:34:06	10.44	0.99	13.65	4.20	0.36	10.43	0.94	13.65	4.20	0.38
U2-NG-RATA-run 4	8/18/2007	14:35:06	10.51	0.96	13.63	4.20	0.33	10.44	0.94	13.65	4.20	0.38
U2-NG-RATA-run 4	8/18/2007	14:36:06	10.46	0.99	13.65	4.20	0.33	10.45	0.95	13.64	4.20	0.37
U2-NG-RATA-run 4	8/18/2007	14:37:06	10.44	0.96	13.65	4.20	0.30	10.45	0.95	13.64	4.20	0.36
U2-NG-RATA-run 4	8/18/2007	14:38:06	10.51	0.92	13.63	4.20	0.33	10.45	0.95	13.64	4.20	0.36
U2-NG-RATA-run 4	8/18/2007	14:39:06	10.42	0.92	13.63	4.22	0.33	10.45	0.95	13.64	4.20	0.36
U2-NG-RATA-run 4	8/18/2007	14:40:06	10.54	0.90	13.65	4.20	0.33	10.45	0.95	13.64	4.20	0.35
U2-NG-RATA-run 4	8/18/2007	14:41:06	10.51	0.90	13.63	4.22	0.33	10.46	0.95	13.64	4.20	0.35
U2-NG-RATA-run 4	8/18/2007	14:42:06	10.51	0.94	13.63	4.22	0.27	10.46	0.95	13.64	4.20	0.35
U2-NG-RATA-run 4	8/18/2007	14:43:06	10.49	0.94	13.63	4.20	0.21	10.46	0.95	13.64	4.20	0.34
U2-NG-RATA-run 4	8/18/2007	14:44:06	10.49	1.05	13.65	4.20	0.18	10.47	0.95	13.64	4.20	0.33
U2-NG-RATA-run 4	8/18/2007	14:45:06	10.42	0.94	13.63	4.22	0.15	10.47	0.94	13.64	4.20	0.32
U2-NG-RATA-run 4	8/18/2007	14:46:06	10.42	0.94	13.63	4.22	0.12	10.46	0.94	13.64	4.20	0.31
U2-NG-RATA-run 4	8/18/2007	14:47:06	10.48	0.92	13.63	4.22	0.09	10.46	0.94	13.64	4.20	0.30
U2-NG-RATA-run 4	8/18/2007	14:48:06	10.51	0.94	13.63	4.20	0.18	10.47	0.94	13.64	4.20	0.29
END U2-NG-RATA-run 4	8/18/2007	14:49:06	10.48	0.90	13.63	4.22	0.12	10.48	0.90	13.63	4.22	0.12

Plant DeSoto, Unit CT2 - NG, Logged Data Records

Run Number	Date	Time	NOx (ppmv)	CO (ppmv)	O2 (%)	CO2 (%)	THC (ppmv)	AVE NOx (ppmv)	AVE CO (ppmv)	AVE O2 (%)	AVE CO2 (%)	AVE THC (ppmv)
START U2-NG-RATA-run 5	8/18/2007	15:03:06	10.44	0.90	13.63	4.20	0.09	10.44	0.90	13.63	4.20	0.09
U2-NG-RATA-run 5	8/18/2007	15:04:06	10.48	0.96	13.63	4.20	0.15	10.46	0.93	13.63	4.20	0.13
U2-NG-RATA-run 5	8/18/2007	15:05:06	10.54	0.96	13.63	4.20	0.24	10.47	0.93	13.62	4.20	0.16
U2-NG-RATA-run 5	8/18/2007	15:06:06	10.46	0.90	13.63	4.20	0.27	10.48	0.93	13.62	4.20	0.18
U2-NG-RATA-run 5	8/18/2007	15:07:06	10.54	0.98	13.65	4.20	0.30	10.49	0.93	13.63	4.20	0.21
U2-NG-RATA-run 5	8/18/2007	15:08:06	10.61	0.88	13.63	4.20	0.30	10.51	0.93	13.63	4.19	0.24
U2-NG-RATA-run 5	8/18/2007	15:09:06	10.56	0.96	13.63	4.20	0.27	10.52	0.93	13.63	4.19	0.24
U2-NG-RATA-run 5	8/18/2007	15:10:06	10.58	0.99	13.65	4.20	0.27	10.53	0.93	13.63	4.19	0.24
U2-NG-RATA-run 5	8/18/2007	15:11:06	10.59	0.78	13.63	4.20	0.30	10.54	0.93	13.63	4.19	0.25
U2-NG-RATA-run 5	8/18/2007	15:12:06	10.56	0.87	13.63	4.20	0.30	10.54	0.93	13.63	4.19	0.25
U2-NG-RATA-run 5	8/18/2007	15:13:06	10.48	0.88	13.63	4.20	0.33	10.54	0.93	13.63	4.19	0.26
U2-NG-RATA-run 5	8/18/2007	15:14:06	10.53	0.92	13.63	4.20	0.24	10.54	0.93	13.63	4.19	0.26
U2-NG-RATA-run 5	8/18/2007	15:15:06	10.66	0.92	13.63	4.20	0.21	10.54	0.93	13.63	4.19	0.26
U2-NG-RATA-run 5	8/18/2007	15:16:06	10.59	0.88	13.63	4.20	0.12	10.55	0.93	13.63	4.19	0.25
U2-NG-RATA-run 5	8/18/2007	15:17:06	10.66	0.94	13.63	4.20	0.09	10.56	0.93	13.63	4.19	0.24
U2-NG-RATA-run 5	8/18/2007	15:18:06	10.63	0.92	13.63	4.20	-0.03	10.56	0.93	13.63	4.19	0.22
U2-NG-RATA-run 5	8/18/2007	15:19:06	10.51	0.90	13.63	4.22	-0.15	10.57	0.93	13.63	4.20	0.21
U2-NG-RATA-run 5	8/18/2007	15:20:06	10.48	0.88	13.60	4.22	-0.24	10.56	0.93	13.63	4.20	0.18
U2-NG-RATA-run 5	8/18/2007	15:21:06	10.41	0.88	13.60	4.22	-0.33	10.55	0.93	13.63	4.20	0.16
U2-NG-RATA-run 5	8/18/2007	15:22:06	10.42	0.92	13.60	4.22	-0.42	10.54	0.92	13.62	4.20	0.13
U2-NG-RATA-run 5	8/18/2007	15:23:06	10.39	0.90	13.58	4.24	-0.48	10.54	0.92	13.62	4.20	0.10
END U2-NG-RATA-run 5	8/18/2007	15:24:06	10.42	0.90	13.58	4.22	-0.57	10.53	0.92	13.62	4.20	0.07
START U2-NG-RATA-run 6	8/18/2007	15:38:06	10.44	0.85	13.58	4.22	-0.36	10.44	0.85	13.58	4.22	-0.36
U2-NG-RATA-run 6	8/18/2007	15:39:06	10.36	0.92	13.58	4.22	-0.36	10.40	0.91	13.59	4.22	-0.37
U2-NG-RATA-run 6	8/18/2007	15:40:06	10.34	0.90	13.58	4.22	-0.36	10.38	0.90	13.59	4.22	-0.36
U2-NG-RATA-run 6	8/18/2007	15:41:06	10.39	0.94	13.60	4.22	-0.33	10.39	0.89	13.58	4.22	-0.36
U2-NG-RATA-run 6	8/18/2007	15:42:06	10.42	0.87	13.58	4.22	-0.33	10.39	0.90	13.58	4.22	-0.36
U2-NG-RATA-run 6	8/18/2007	15:43:06	10.36	0.88	13.60	4.22	-0.30	10.39	0.90	13.58	4.22	-0.35
U2-NG-RATA-run 6	8/18/2007	15:44:06	10.39	0.85	13.58	4.22	-0.27	10.39	0.89	13.58	4.22	-0.33
U2-NG-RATA-run 6	8/18/2007	15:45:06	10.41	0.92	13.58	4.22	-0.21	10.39	0.89	13.58	4.22	-0.32
U2-NG-RATA-run 6	8/18/2007	15:46:06	10.44	0.87	13.58	4.22	-0.18	10.39	0.90	13.58	4.22	-0.30
U2-NG-RATA-run 6	8/18/2007	15:47:06	10.39	0.88	13.58	4.22	-0.15	10.40	0.90	13.58	4.22	-0.29
U2-NG-RATA-run 6	8/18/2007	15:48:06	10.31	0.87	13.58	4.22	-0.12	10.39	0.90	13.58	4.22	-0.27
U2-NG-RATA-run 6	8/18/2007	15:49:06	10.32	0.83	13.60	4.22	-0.06	10.38	0.90	13.58	4.22	-0.26
U2-NG-RATA-run 6	8/18/2007	15:50:06	10.26	0.96	13.60	4.22	0.00	10.37	0.90	13.58	4.22	-0.24
U2-NG-RATA-run 6	8/18/2007	15:51:06	10.31	0.90	13.60	4.22	-0.03	10.36	0.90	13.58	4.21	-0.22
U2-NG-RATA-run 6	8/18/2007	15:52:06	10.27	0.87	13.60	4.20	-0.06	10.36	0.90	13.59	4.21	-0.21
U2-NG-RATA-run 6	8/18/2007	15:53:06	10.32	0.94	13.60	4.22	0.00	10.36	0.90	13.59	4.21	-0.19
U2-NG-RATA-run 6	8/18/2007	15:54:06	10.39	0.88	13.60	4.20	0.00	10.36	0.90	13.59	4.21	-0.18
U2-NG-RATA-run 6	8/18/2007	15:55:06	10.37	0.90	13.60	4.22	0.00	10.36	0.90	13.59	4.21	-0.17
U2-NG-RATA-run 6	8/18/2007	15:56:06	10.34	0.92	13.60	4.22	0.03	10.36	0.90	13.59	4.21	-0.16
U2-NG-RATA-run 6	8/18/2007	15:57:06	10.39	0.92	13.60	4.22	0.06	10.36	0.90	13.59	4.21	-0.15
U2-NG-RATA-run 6	8/18/2007	15:58:06	10.34	0.98	13.60	4.20	0.03	10.36	0.90	13.59	4.21	-0.14
END U2-NG-RATA-run 6	8/18/2007	15:59:06	10.31	0.81	13.60	4.22	0.06	10.36	0.90	13.59	4.21	-0.13

Plant DeSoto, Unit CT2 - NG, Logged Data Records

Run Number	Date	Time	NOx (ppmv)	CO (ppmv)	O2 (%)	CO2 (%)	THC (ppmv)	AVE NOx (ppmv)	AVE CO (ppmv)	AVE O2 (%)	AVE CO2 (%)	AVE THC (ppmv)
START U2-NG-RATA-run 7	8/18/2007	16:14:05	10.63	0.96	13.58	4.20	0.12	10.63	0.96	13.58	4.20	0.12
U2-NG-RATA-run 7	8/18/2007	16:15:05	10.73	0.92	13.60	4.20	0.21	10.70	0.90	13.60	4.20	0.17
U2-NG-RATA-run 7	8/18/2007	16:16:05	10.69	0.92	13.60	4.20	0.18	10.70	0.90	13.60	4.19	0.18
U2-NG-RATA-run 7	8/18/2007	16:17:05	10.73	0.99	13.60	4.18	0.12	10.70	0.90	13.60	4.19	0.17
U2-NG-RATA-run 7	8/18/2007	16:18:05	10.74	0.83	13.60	4.20	0.09	10.71	0.89	13.60	4.19	0.16
U2-NG-RATA-run 7	8/18/2007	16:19:05	10.71	0.92	13.60	4.20	0.15	10.72	0.90	13.60	4.19	0.16
U2-NG-RATA-run 7	8/18/2007	16:20:05	10.64	0.90	13.60	4.20	0.15	10.71	0.90	13.60	4.19	0.15
U2-NG-RATA-run 7	8/18/2007	16:21:05	10.78	0.87	13.60	4.20	0.15	10.71	0.90	13.60	4.19	0.15
U2-NG-RATA-run 7	8/18/2007	16:22:05	10.74	0.94	13.60	4.20	0.15	10.71	0.90	13.60	4.19	0.15
U2-NG-RATA-run 7	8/18/2007	16:23:05	10.76	0.92	13.60	4.20	0.21	10.72	0.90	13.60	4.19	0.15
U2-NG-RATA-run 7	8/18/2007	16:24:05	10.78	0.83	13.60	4.20	0.21	10.73	0.90	13.60	4.19	0.15
U2-NG-RATA-run 7	8/18/2007	16:25:05	10.78	0.88	13.60	4.20	0.21	10.73	0.90	13.60	4.19	0.16
U2-NG-RATA-run 7	8/18/2007	16:26:05	10.76	0.92	13.60	4.20	0.21	10.74	0.90	13.60	4.19	0.16
U2-NG-RATA-run 7	8/18/2007	16:27:05	10.71	0.88	13.60	4.20	0.24	10.74	0.90	13.60	4.19	0.17
U2-NG-RATA-run 7	8/18/2007	16:28:05	10.71	0.87	13.60	4.20	0.21	10.74	0.90	13.60	4.19	0.17
U2-NG-RATA-run 7	8/18/2007	16:29:05	10.68	0.87	13.60	4.20	0.27	10.74	0.90	13.60	4.19	0.18
U2-NG-RATA-run 7	8/18/2007	16:30:05	10.68	0.90	13.60	4.20	0.36	10.73	0.90	13.60	4.19	0.19
U2-NG-RATA-run 7	8/18/2007	16:31:05	10.73	0.92	13.60	4.20	0.42	10.73	0.90	13.60	4.19	0.20
U2-NG-RATA-run 7	8/18/2007	16:32:05	10.69	0.88	13.60	4.20	0.45	10.73	0.90	13.60	4.19	0.21
U2-NG-RATA-run 7	8/18/2007	16:33:05	10.71	0.88	13.60	4.22	0.51	10.73	0.89	13.60	4.19	0.22
U2-NG-RATA-run 7	8/18/2007	16:34:05	10.73	0.87	13.60	4.20	0.51	10.73	0.89	13.60	4.19	0.24
END U2-NG-RATA-run 7	8/18/2007	16:35:05	10.69	0.88	13.60	4.20	0.60	10.73	0.89	13.60	4.20	0.26
START U2-NG-RATA-run 8	8/18/2007	16:52:25	9.87	0.94	13.60	4.20	0.39	9.87	0.94	13.60	4.20	0.39
U2-NG-RATA-run 8	8/18/2007	16:53:25	9.92	0.96	13.60	4.20	0.39	9.86	0.88	13.60	4.20	0.39
U2-NG-RATA-run 8	8/18/2007	16:54:25	9.99	0.94	13.60	4.20	0.36	9.89	0.88	13.60	4.20	0.39
U2-NG-RATA-run 8	8/18/2007	16:55:25	10.01	0.96	13.60	4.20	0.42	9.92	0.88	13.60	4.20	0.39
U2-NG-RATA-run 8	8/18/2007	16:56:25	10.04	0.85	13.60	4.20	0.42	9.94	0.88	13.60	4.20	0.40
U2-NG-RATA-run 8	8/18/2007	16:57:25	10.16	0.92	13.60	4.20	0.42	9.96	0.88	13.60	4.20	0.40
U2-NG-RATA-run 8	8/18/2007	16:58:25	10.09	0.83	13.60	4.20	0.39	9.98	0.88	13.60	4.20	0.40
U2-NG-RATA-run 8	8/18/2007	16:59:25	10.12	0.90	13.60	4.20	0.42	10.00	0.88	13.60	4.20	0.40
U2-NG-RATA-run 8	8/18/2007	17:00:25	10.12	0.92	13.60	4.20	0.45	10.01	0.88	13.60	4.20	0.41
U2-NG-RATA-run 8	8/18/2007	17:01:25	10.12	0.92	13.60	4.20	0.51	10.02	0.88	13.60	4.20	0.41
U2-NG-RATA-run 8	8/18/2007	17:02:25	10.16	0.85	13.60	4.20	0.48	10.04	0.88	13.60	4.20	0.43
U2-NG-RATA-run 8	8/18/2007	17:03:25	10.21	0.96	13.60	4.20	0.45	10.05	0.88	13.60	4.20	0.43
U2-NG-RATA-run 8	8/18/2007	17:04:25	10.19	0.92	13.60	4.20	0.36	10.07	0.88	13.60	4.20	0.42
U2-NG-RATA-run 8	8/18/2007	17:05:25	10.22	0.90	13.60	4.20	0.36	10.08	0.88	13.60	4.20	0.42
U2-NG-RATA-run 8	8/18/2007	17:06:25	10.27	0.76	13.60	4.20	0.21	10.09	0.88	13.60	4.20	0.41
U2-NG-RATA-run 8	8/18/2007	17:07:25	10.24	0.88	13.60	4.20	0.27	10.10	0.88	13.60	4.20	0.40
U2-NG-RATA-run 8	8/18/2007	17:08:25	10.27	0.90	13.58	4.20	0.27	10.11	0.88	13.60	4.20	0.39
U2-NG-RATA-run 8	8/18/2007	17:09:25	10.22	0.94	13.58	4.20	0.30	10.12	0.88	13.60	4.20	0.38
U2-NG-RATA-run 8	8/18/2007	17:10:25	10.29	0.88	13.58	4.20	0.30	10.12	0.88	13.60	4.20	0.38
U2-NG-RATA-run 8	8/18/2007	17:11:25	10.26	0.81	13.60	4.20	0.27	10.13	0.88	13.60	4.20	0.38
U2-NG-RATA-run 8	8/18/2007	17:12:25	10.31	0.88	13.60	4.20	0.39	10.14	0.88	13.60	4.20	0.38
END U2-NG-RATA-run 8	8/18/2007	17:13:25	10.34	0.87	13.58	4.20	0.42	10.15	0.88	13.60	4.20	0.38

Plant DeSoto, Unit CT2 - NG, Logged Data Records

Run Number	Date	Time	NOx (ppmv)	CO (ppmv)	O2 (%)	CO2 (%)	THC (ppmv)	AVE NOx (ppmv)	AVE CO (ppmv)	AVE O2 (%)	AVE CO2 (%)	AVE THC (ppmv)
START U2-NG-RATA-run 9	8/18/2007	17:28:12	10.39	0.83	13.60	4.18	0.03	10.39	0.83	13.60	4.18	0.03
U2-NG-RATA-run 9	8/18/2007	17:29:12	10.36	0.88	13.58	4.20	0.00	10.38	0.88	13.58	4.20	0.01
U2-NG-RATA-run 9	8/18/2007	17:30:12	10.36	0.79	13.60	4.20	0.03	10.37	0.89	13.58	4.20	0.01
U2-NG-RATA-run 9	8/18/2007	17:31:12	10.26	0.94	13.60	4.20	0.03	10.35	0.89	13.59	4.20	0.01
U2-NG-RATA-run 9	8/18/2007	17:32:12	10.31	0.98	13.60	4.20	0.09	10.33	0.89	13.59	4.20	0.02
U2-NG-RATA-run 9	8/18/2007	17:33:12	10.32	0.92	13.60	4.20	0.12	10.33	0.89	13.59	4.20	0.04
U2-NG-RATA-run 9	8/18/2007	17:34:12	10.31	0.90	13.60	4.20	0.18	10.32	0.89	13.59	4.20	0.06
U2-NG-RATA-run 9	8/18/2007	17:35:12	10.24	0.85	13.58	4.20	0.15	10.32	0.89	13.59	4.20	0.07
U2-NG-RATA-run 9	8/18/2007	17:36:12	10.29	0.90	13.60	4.20	0.12	10.31	0.89	13.59	4.20	0.08
U2-NG-RATA-run 9	8/18/2007	17:37:12	10.27	0.87	13.58	4.22	0.15	10.31	0.89	13.59	4.20	0.08
U2-NG-RATA-run 9	8/18/2007	17:38:12	10.41	0.85	13.60	4.20	0.18	10.31	0.89	13.59	4.20	0.09
U2-NG-RATA-run 9	8/18/2007	17:39:12	10.36	0.87	13.60	4.20	0.18	10.31	0.89	13.59	4.20	0.10
U2-NG-RATA-run 9	8/18/2007	17:40:12	10.36	0.94	13.60	4.20	0.12	10.32	0.89	13.59	4.20	0.11
U2-NG-RATA-run 9	8/18/2007	17:41:12	10.37	0.94	13.60	4.20	0.15	10.32	0.89	13.59	4.20	0.11
U2-NG-RATA-run 9	8/18/2007	17:42:12	10.39	0.81	13.58	4.20	0.12	10.33	0.89	13.59	4.20	0.11
U2-NG-RATA-run 9	8/18/2007	17:43:12	10.36	0.76	13.60	4.20	0.09	10.33	0.89	13.59	4.20	0.11
U2-NG-RATA-run 9	8/18/2007	17:44:12	10.41	0.60	13.58	4.22	0.06	10.34	0.89	13.59	4.20	0.11
U2-NG-RATA-run 9	8/18/2007	17:45:12	10.39	0.65	13.58	4.20	0.12	10.34	0.88	13.59	4.20	0.11
U2-NG-RATA-run 9	8/18/2007	17:46:12	10.39	0.85	13.60	4.20	0.12	10.34	0.88	13.59	4.20	0.11
U2-NG-RATA-run 9	8/18/2007	17:47:12	10.42	0.90	13.60	4.20	0.09	10.35	0.88	13.59	4.20	0.11
U2-NG-RATA-run 9	8/18/2007	17:48:12	10.41	0.98	13.60	4.20	0.03	10.35	0.88	13.59	4.20	0.11
END U2-NG-RATA-run 9	8/18/2007	17:49:12	10.42	0.88	13.60	4.20	0.09	10.35	0.88	13.59	4.20	0.10

C-3
CT2 – Fuel Oil

Plant DeSoto, Unit CT2 - FO, Logged Data Records

Run Number	Date	Time	NOx (ppmv)	CO (ppmv)	O2 (%)	CO2 (%)	THC (ppmv)	AVE NOx (ppmv)	AVE CO (ppmv)	AVE O2 (%)	AVE CO2 (%)	AVE THC (ppmv)
RUN U2-FO-1												
START U2-FO-Strat, SW Port	8/14/2007	13:30:01	53.92	2.28	12.33	6.43	0.14	53.92	2.28	12.33	6.43	0.14
U2-FO-Strat, SW Port	8/14/2007	13:31:01	54.41	2.24	12.33	6.43	0.12	54.29	2.24	12.32	6.43	0.14
U2-FO-Strat, SW Port	8/14/2007	13:32:01	54.17	2.11	12.33	6.43	0.08	54.35	2.20	12.32	6.43	0.14
U2-FO-Strat, SW Port	8/14/2007	13:33:01	54.41	2.02	12.33	6.41	0.16	54.33	2.15	12.32	6.43	0.17
U2-FO-Strat, SW Port	8/14/2007	13:34:01	54.17	1.95	12.33	6.43	0.16	54.30	2.11	12.33	6.43	0.16
U2-FO-Strat, SW Port	8/14/2007	13:35:01	54.17	1.88	12.35	6.41	0.12	54.28	2.07	12.33	6.43	0.15
U2-FO-Strat, SW Port	8/14/2007	13:36:01	54.41	1.82	12.38	6.41	0.18	54.27	2.04	12.33	6.42	0.17
U2-FO-Strat, SW Port	8/14/2007	13:37:01	53.80	1.72	12.38	6.41	0.11	54.26	2.01	12.34	6.42	0.16
U2-FO-Strat, SW Port	8/14/2007	13:38:01	53.44	1.63	12.38	6.39	0.14	54.18	1.96	12.34	6.42	0.16
U2-FO-Strat, SW Port	8/14/2007	13:39:01	53.44	1.59	12.38	6.39	0.22	54.10	1.92	12.35	6.42	0.17
U2-FO-Strat, SW Port	8/14/2007	13:40:01	53.19	1.57	12.38	6.39	0.09	54.02	1.89	12.35	6.41	0.16
U2-FO-Strat, SW Port	8/14/2007	13:41:01	53.19	1.59	12.38	6.39	0.11	53.94	1.86	12.35	6.41	0.16
U2-FO-Strat, SW Port	8/14/2007	13:42:01	52.70	1.61	12.38	6.39	0.07	53.86	1.84	12.35	6.41	0.16
U2-FO-Strat, SW Port	8/14/2007	13:43:01	52.34	1.59	12.38	6.41	0.08	53.75	1.82	12.36	6.41	0.15
U2-FO-Strat, SW Port	8/14/2007	13:44:01	52.34	1.61	12.38	6.39	0.09	53.65	1.80	12.36	6.41	0.15
END U2-FO-Strat, SW Port	8/14/2007	13:45:01	52.34	1.61	12.38	6.39	0.09	52.34	1.61	12.38	6.39	0.09
START U2-FO-Strat, SE Port	8/14/2007	13:50:31	54.66	1.93	12.35	6.43	0.22	54.66	1.93	12.35	6.43	0.22
U2-FO-Strat, SE Port	8/14/2007	13:51:31	54.41	1.64	12.35	6.43	0.25	54.52	1.76	12.35	6.42	0.22
U2-FO-Strat, SE Port	8/14/2007	13:52:31	54.29	1.68	12.35	6.41	0.47	54.46	1.69	12.35	6.42	0.32
U2-FO-Strat, SE Port	8/14/2007	13:53:31	54.41	2.33	12.35	6.41	0.22	54.44	1.78	12.35	6.42	0.32
U2-FO-Strat, SE Port	8/14/2007	13:54:31	54.41	1.97	12.35	6.41	0.44	54.44	1.89	12.35	6.42	0.30
U2-FO-Strat, SE Port	8/14/2007	13:55:31	54.41	1.75	12.35	6.41	0.47	54.43	1.88	12.35	6.42	0.35
U2-FO-Strat, SE Port	8/14/2007	13:56:31	54.29	1.72	12.35	6.41	0.31	54.41	1.86	12.35	6.42	0.36
U2-FO-Strat, SE Port	8/14/2007	13:57:31	53.80	1.63	12.35	6.41	0.23	54.37	1.84	12.35	6.42	0.35
U2-FO-Strat, SE Port	8/14/2007	13:58:31	53.19	1.61	12.38	6.41	0.20	54.26	1.81	12.35	6.41	0.33
U2-FO-Strat, SE Port	8/14/2007	13:59:31	53.07	1.59	12.35	6.43	0.21	54.13	1.78	12.35	6.42	0.32
U2-FO-Strat, SE Port	8/14/2007	14:00:31	53.19	1.59	12.35	6.41	0.22	54.03	1.77	12.35	6.41	0.31
U2-FO-Strat, SE Port	8/14/2007	14:01:31	53.07	1.59	12.38	6.41	0.19	53.96	1.75	12.35	6.41	0.30
U2-FO-Strat, SE Port	8/14/2007	14:02:31	52.83	1.61	12.35	6.41	0.20	53.87	1.74	12.35	6.41	0.29
U2-FO-Strat, SE Port	8/14/2007	14:03:31	52.70	1.68	12.35	6.43	0.17	53.78	1.72	12.35	6.42	0.28
U2-FO-Strat, SE Port	8/14/2007	14:04:31	52.95	1.64	12.35	6.43	0.16	53.71	1.72	12.35	6.42	0.27
END U2-FO-Strat, SE Port	8/14/2007	14:05:31	52.95	1.63	12.35	6.43	0.17	53.66	1.71	12.35	6.42	0.26

Plant DeSoto, Unit CT2 - FO, Logged Data Records

Run Number	Date	Time	NOx (ppmv)	CO (ppmv)	O2 (%)	CO2 (%)	THC (ppmv)	AVE NOx (ppmv)	AVE CO (ppmv)	AVE O2 (%)	AVE CO2 (%)	AVE THC (ppmv)
START U2-FO-Strat, NE Port	8/14/2007	14:12:10	54.66	4.50	12.35	6.41	0.54	54.66	4.50	12.35	6.41	0.54
U2-FO-Strat, NE Port	8/14/2007	14:13:10	54.66	4.91	12.35	6.41	0.51	54.74	4.67	12.35	6.41	0.52
U2-FO-Strat, NE Port	8/14/2007	14:14:10	54.66	5.13	12.35	6.41	0.51	54.70	4.86	12.35	6.41	0.51
U2-FO-Strat, NE Port	8/14/2007	14:15:10	54.53	5.62	12.35	6.41	0.61	54.70	4.97	12.35	6.41	0.53
U2-FO-Strat, NE Port	8/14/2007	14:16:10	54.53	6.23	12.35	6.41	0.52	54.67	5.22	12.35	6.41	0.54
U2-FO-Strat, NE Port	8/14/2007	14:17:10	54.66	5.29	12.35	6.41	0.51	54.65	5.36	12.35	6.41	0.54
U2-FO-Strat, NE Port	8/14/2007	14:18:10	54.41	4.88	12.35	6.41	0.44	54.62	5.30	12.35	6.41	0.53
U2-FO-Strat, NE Port	8/14/2007	14:19:10	54.53	2.53	12.38	6.39	0.38	54.60	5.11	12.35	6.41	0.51
U2-FO-Strat, NE Port	8/14/2007	14:20:10	53.92	1.66	12.38	6.39	0.37	54.56	4.72	12.36	6.41	0.50
U2-FO-Strat, NE Port	8/14/2007	14:21:10	53.56	1.57	12.38	6.41	0.39	54.46	4.38	12.36	6.41	0.48
U2-FO-Strat, NE Port	8/14/2007	14:22:10	53.31	1.55	12.38	6.41	0.41	54.36	4.10	12.36	6.41	0.47
U2-FO-Strat, NE Port	8/14/2007	14:23:10	53.44	1.52	12.38	6.39	0.47	54.27	3.86	12.36	6.41	0.48
U2-FO-Strat, NE Port	8/14/2007	14:24:10	53.19	1.61	12.38	6.39	0.48	54.19	3.67	12.36	6.41	0.48
U2-FO-Strat, NE Port	8/14/2007	14:25:10	52.83	1.66	12.40	6.39	0.46	54.10	3.52	12.36	6.41	0.48
U2-FO-Strat, NE Port	8/14/2007	14:26:10	52.70	1.61	12.38	6.39	0.46	54.00	3.38	12.36	6.41	0.48
END U2-FO-Strat, NE Port	8/14/2007	14:27:10	52.70	1.59	12.40	6.39	0.50	52.70	1.59	12.40	6.39	0.50
START U2-FO-Strat, NW Port	8/14/2007	14:36:01	53.44	1.53	12.40	6.37	0.63	53.44	1.53	12.40	6.37	0.63
U2-FO-Strat, NW Port	8/14/2007	14:37:00	53.56	1.57	12.40	6.37	0.64	53.51	1.55	12.40	6.37	0.63
U2-FO-Strat, NW Port	8/14/2007	14:38:01	53.68	1.53	12.40	6.37	0.64	53.59	1.55	12.40	6.37	0.63
U2-FO-Strat, NW Port	8/14/2007	14:39:01	53.56	1.55	12.40	6.37	0.65	53.59	1.55	12.40	6.37	0.64
U2-FO-Strat, NW Port	8/14/2007	14:40:01	53.56	1.57	12.43	6.35	0.68	53.58	1.55	12.40	6.37	0.64
U2-FO-Strat, NW Port	8/14/2007	14:41:01	53.44	1.55	12.40	6.37	0.71	53.55	1.55	12.40	6.37	0.65
U2-FO-Strat, NW Port	8/14/2007	14:42:01	53.44	1.52	12.43	6.35	0.71	53.53	1.55	12.40	6.37	0.66
U2-FO-Strat, NW Port	8/14/2007	14:43:01	52.95	1.52	12.40	6.35	0.72	53.49	1.55	12.40	6.37	0.67
U2-FO-Strat, NW Port	8/14/2007	14:44:01	52.70	1.48	12.43	6.35	0.72	53.39	1.55	12.40	6.37	0.68
U2-FO-Strat, NW Port	8/14/2007	14:45:01	52.58	1.52	12.40	6.35	0.75	53.31	1.54	12.40	6.36	0.68
U2-FO-Strat, NW Port	8/14/2007	14:46:01	52.83	1.52	12.43	6.35	0.75	53.26	1.54	12.41	6.36	0.69
U2-FO-Strat, NW Port	8/14/2007	14:47:01	52.70	1.53	12.48	6.31	0.79	53.21	1.54	12.41	6.36	0.70
U2-FO-Strat, NW Port	8/14/2007	14:48:01	51.85	1.57	12.50	6.29	0.83	53.13	1.54	12.41	6.36	0.71
U2-FO-Strat, NW Port	8/14/2007	14:49:01	51.24	1.52	12.55	6.25	0.83	53.01	1.54	12.42	6.35	0.72
U2-FO-Strat, NW Port	8/14/2007	14:50:01	51.48	1.52	12.50	6.27	0.86	52.89	1.54	12.43	6.34	0.73
END U2-FO-Strat, NW Port	8/14/2007	14:51:01	51.61	1.52	12.50	6.27	0.90	51.61	1.52	12.50	6.27	0.90

Plant DeSoto, Unit CT2 - FO, Logged Data Records

Run Number	Date	Time	NOx (ppmv)	CO (ppmv)	O2 (%)	CO2 (%)	THC (ppmv)	AVE NOx (ppmv)	AVE CO (ppmv)	AVE O2 (%)	AVE CO2 (%)	AVE THC (ppmv)
RUN U2-FO-2												
START U2-FO-2, SW Port	8/14/2007	15:13:02	54.17	1.48	12.40	6.33	0.91	54.17	1.48	12.40	6.33	0.91
U2-FO-2, SW Port	8/14/2007	15:14:02	54.05	1.44	12.40	6.33	0.91	54.13	1.49	12.40	6.33	0.91
U2-FO-2, SW Port	8/14/2007	15:15:02	54.05	1.48	12.40	6.33	0.92	54.10	1.48	12.40	6.33	0.91
U2-FO-2, SW Port	8/14/2007	15:16:02	53.92	1.50	12.40	6.35	0.92	54.07	1.48	12.40	6.33	0.91
U2-FO-2, SW Port	8/14/2007	15:17:02	54.05	1.48	12.40	6.35	0.92	54.05	1.48	12.40	6.34	0.91
U2-FO-2, SW Port	8/14/2007	15:18:02	54.05	1.48	12.40	6.35	0.92	54.05	1.48	12.40	6.34	0.92
U2-FO-2, SW Port	8/14/2007	15:19:02	53.92	1.46	12.40	6.35	0.93	54.03	1.48	12.40	6.34	0.92
U2-FO-2, SW Port	8/14/2007	15:20:02	53.92	1.48	12.40	6.35	0.94	54.02	1.48	12.40	6.34	0.92
U2-FO-2, SW Port	8/14/2007	15:21:02	53.80	1.50	12.40	6.35	1.07	54.00	1.48	12.40	6.34	0.93
U2-FO-2, SW Port	8/14/2007	15:22:02	53.80	1.48	12.40	6.35	0.97	53.98	1.48	12.40	6.34	0.94
U2-FO-2, SW Port	8/14/2007	15:23:02	53.44	1.48	12.40	6.33	0.96	53.95	1.48	12.40	6.34	0.94
U2-FO-2, SW Port	8/14/2007	15:24:02	53.44	1.48	12.40	6.35	0.96	53.91	1.48	12.40	6.34	0.94
U2-FO-2, SW Port	8/14/2007	15:25:02	53.07	1.50	12.40	6.35	0.97	53.86	1.48	12.40	6.34	0.94
U2-FO-2, SW Port	8/14/2007	15:26:02	53.07	1.48	12.40	6.35	1.04	53.80	1.48	12.40	6.34	0.95
U2-FO-2, SW Port	8/14/2007	15:27:02	53.07	1.50	12.40	6.35	1.03	53.75	1.48	12.40	6.34	0.95
END U2-FO-2, SW Port	8/14/2007	15:28:02	52.46	1.52	12.40	6.35	1.02	53.68	1.49	12.40	6.35	0.96
START U2-FO-2, SE Port	8/14/2007	15:35:01	53.68	1.79	12.38	6.37	1.16	53.68	1.79	12.38	6.37	1.16
U2-FO-2, SE Port	8/14/2007	15:36:01	54.17	1.77	12.38	6.39	1.28	53.88	1.77	12.37	6.37	1.24
U2-FO-2, SE Port	8/14/2007	15:37:01	54.41	1.79	12.35	6.39	1.31	54.06	1.78	12.36	6.38	1.25
U2-FO-2, SE Port	8/14/2007	15:38:01	54.53	1.79	12.38	6.37	1.31	54.19	1.77	12.37	6.38	1.27
U2-FO-2, SE Port	8/14/2007	15:39:01	54.41	1.72	12.38	6.37	1.28	54.24	1.77	12.37	6.38	1.28
U2-FO-2, SE Port	8/14/2007	15:40:01	54.29	1.70	12.38	6.37	1.31	54.26	1.75	12.37	6.38	1.28
U2-FO-2, SE Port	8/14/2007	15:41:01	54.29	1.81	12.38	6.37	1.35	54.26	1.75	12.37	6.38	1.29
U2-FO-2, SE Port	8/14/2007	15:42:01	53.92	1.93	12.35	6.37	1.28	54.25	1.76	12.37	6.38	1.29
U2-FO-2, SE Port	8/14/2007	15:43:01	53.56	1.77	12.35	6.39	1.29	54.19	1.77	12.37	6.38	1.29
U2-FO-2, SE Port	8/14/2007	15:44:01	53.44	1.66	12.35	6.39	1.31	54.12	1.76	12.37	6.38	1.29
U2-FO-2, SE Port	8/14/2007	15:45:01	53.56	1.68	12.38	6.39	1.32	54.06	1.75	12.36	6.38	1.29
U2-FO-2, SE Port	8/14/2007	15:46:01	53.31	1.66	12.38	6.37	1.35	54.00	1.74	12.37	6.38	1.29
U2-FO-2, SE Port	8/14/2007	15:47:01	52.95	1.70	12.38	6.37	1.34	53.93	1.74	12.37	6.38	1.30
U2-FO-2, SE Port	8/14/2007	15:48:01	53.19	1.73	12.35	6.37	1.32	53.86	1.74	12.37	6.38	1.30
U2-FO-2, SE Port	8/14/2007	15:49:01	53.31	1.73	12.38	6.37	1.34	53.81	1.73	12.37	6.38	1.30
END U2-FO-2, SE Port	8/14/2007	15:50:01	53.07	1.70	12.38	6.37	1.34	53.76	1.73	12.37	6.38	1.30

Plant DeSoto, Unit CT2 - FO, Logged Data Records

			NOx	CO	O2	CO2	THC	AVE NOx	AVE CO	AVE O2	AVE CO2	AVE THC
Run Number	Date	Time	(ppmv)	(ppmv)	(%)	(%)	(ppmv)	(ppmv)	(ppmv)	(%)	(%)	(ppmv)
START U2-FO-2, NE Port	8/14/2007	16:05:01	53.92	2.18	12.35	6.39	1.24	53.92	2.18	12.35	6.39	1.24
U2-FO-2, NE Port	8/14/2007	16:06:01	53.80	2.06	12.35	6.39	1.25	53.82	2.11	12.35	6.39	1.24
U2-FO-2, NE Port	8/14/2007	16:07:01	53.68	2.13	12.35	6.39	1.30	53.77	2.08	12.35	6.39	1.26
U2-FO-2, NE Port	8/14/2007	16:08:01	53.80	3.38	12.35	6.39	1.40	53.77	2.24	12.35	6.39	1.28
U2-FO-2, NE Port	8/14/2007	16:09:01	53.68	9.98	12.35	6.39	1.45	53.78	3.28	12.35	6.39	1.32
U2-FO-2, NE Port	8/14/2007	16:10:01	53.56	10.56	12.33	6.39	1.44	53.74	4.88	12.35	6.39	1.35
U2-FO-2, NE Port	8/14/2007	16:11:01	53.68	5.63	12.35	6.39	1.39	53.71	5.41	12.35	6.39	1.36
U2-FO-2, NE Port	8/14/2007	16:12:01	53.31	2.24	12.35	6.37	1.43	53.70	5.13	12.35	6.39	1.36
U2-FO-2, NE Port	8/14/2007	16:13:01	52.70	1.66	12.38	6.37	1.48	53.61	4.72	12.35	6.39	1.37
U2-FO-2, NE Port	8/14/2007	16:14:01	52.70	1.64	12.38	6.37	1.52	53.51	4.38	12.35	6.39	1.39
U2-FO-2, NE Port	8/14/2007	16:15:01	52.70	1.66	12.35	6.39	1.55	53.42	4.11	12.35	6.39	1.40
U2-FO-2, NE Port	8/14/2007	16:16:01	52.46	1.66	12.38	6.37	1.56	53.35	3.88	12.35	6.39	1.42
U2-FO-2, NE Port	8/14/2007	16:17:01	52.22	1.59	12.38	6.37	1.60	53.27	3.69	12.35	6.39	1.43
U2-FO-2, NE Port	8/14/2007	16:18:01	52.34	1.61	12.38	6.37	1.61	53.19	3.53	12.36	6.39	1.44
U2-FO-2, NE Port	8/14/2007	16:19:01	52.22	1.64	12.38	6.37	1.63	53.12	3.40	12.36	6.39	1.46
END U2-FO-2, NE Port	8/14/2007	16:20:01	52.34	1.64	12.38	6.37	1.46	52.34	1.64	12.38	6.37	1.46
START U2-FO-2, NW Port	8/14/2007	16:25:01	52.95	1.64	12.38	6.37	1.34	52.95	1.64	12.38	6.37	1.34
U2-FO-2, NW Port	8/14/2007	16:26:01	52.95	1.57	12.40	6.37	1.36	52.95	1.62	12.38	6.37	1.35
U2-FO-2, NW Port	8/14/2007	16:27:01	52.83	1.57	12.40	6.37	1.37	52.92	1.60	12.39	6.37	1.35
U2-FO-2, NW Port	8/14/2007	16:28:01	52.83	1.53	12.38	6.37	1.38	52.89	1.59	12.39	6.37	1.36
U2-FO-2, NW Port	8/14/2007	16:29:01	52.83	1.57	12.40	6.35	1.40	52.89	1.58	12.39	6.37	1.37
U2-FO-2, NW Port	8/14/2007	16:30:01	52.95	1.55	12.40	6.35	1.42	52.90	1.58	12.39	6.37	1.38
U2-FO-2, NW Port	8/14/2007	16:31:01	52.83	1.57	12.38	6.37	1.43	52.90	1.58	12.39	6.37	1.39
U2-FO-2, NW Port	8/14/2007	16:32:01	52.22	1.59	12.40	6.35	1.46	52.85	1.58	12.39	6.37	1.40
U2-FO-2, NW Port	8/14/2007	16:33:01	52.34	1.55	12.40	6.35	1.48	52.78	1.58	12.39	6.36	1.41
U2-FO-2, NW Port	8/14/2007	16:34:01	52.22	1.53	12.40	6.35	1.48	52.73	1.57	12.39	6.36	1.41
U2-FO-2, NW Port	8/14/2007	16:35:01	52.22	1.55	12.40	6.35	1.50	52.67	1.57	12.39	6.36	1.42
U2-FO-2, NW Port	8/14/2007	16:36:01	52.22	1.55	12.43	6.33	1.51	52.63	1.57	12.39	6.36	1.43
U2-FO-2, NW Port	8/14/2007	16:37:01	51.85	1.57	12.43	6.33	1.53	52.58	1.57	12.40	6.36	1.44
U2-FO-2, NW Port	8/14/2007	16:38:01	51.61	1.55	12.40	6.35	1.57	52.51	1.56	12.40	6.36	1.44
U2-FO-2, NW Port	8/14/2007	16:39:01	51.36	1.57	12.48	6.31	1.56	52.45	1.57	12.40	6.35	1.45
END U2-FO-2, NW Port	8/14/2007	16:40:01	51.48	1.52	12.45	6.31	1.59	52.38	1.56	12.40	6.35	1.46

Plant DeSoto, Unit CT2 - FO, Logged Data Records

Run Number	Date	Time	NOx (ppmv)	CO (ppmv)	O2 (%)	CO2 (%)	THC (ppmv)	AVE NOx (ppmv)	AVE CO (ppmv)	AVE O2 (%)	AVE CO2 (%)	AVE THC (ppmv)
RUN U2-FO-3												
START U2-FO-3, SW Port	8/14/2007	16:54:01	52.83	1.68	12.38	6.33	0.79	52.83	1.68	12.38	6.33	0.79
U2-FO-3, SW Port	8/14/2007	16:56:01	53.07	1.55	12.35	6.37	0.78	53.00	1.56	12.35	6.35	0.78
U2-FO-3, SW Port	8/14/2007	16:57:01	52.83	1.53	12.35	6.35	0.77	53.01	1.55	12.35	6.36	0.78
U2-FO-3, SW Port	8/14/2007	16:58:01	52.95	1.59	12.15	6.35	0.77	52.98	1.55	12.35	6.36	0.78
U2-FO-3, SW Port	8/14/2007	16:59:01	52.83	1.59	12.35	6.37	0.79	52.97	1.55	12.35	6.36	0.78
U2-FO-3, SW Port	8/14/2007	17:00:01	52.83	1.57	12.35	6.37	0.81	52.96	1.55	12.35	6.36	0.78
U2-FO-3, SW Port	8/14/2007	17:01:01	52.70	1.55	12.33	6.37	0.82	52.93	1.56	12.35	6.37	0.79
U2-FO-3, SW Port	8/14/2007	17:02:01	52.46	1.57	12.35	6.35	0.79	52.91	1.56	12.35	6.37	0.79
U2-FO-3, SW Port	8/14/2007	17:03:01	52.34	1.55	12.35	6.37	0.77	52.85	1.56	12.35	6.37	0.79
U2-FO-3, SW Port	8/14/2007	17:04:01	52.34	1.59	12.35	6.37	0.75	52.79	1.56	12.35	6.37	0.79
U2-FO-3, SW Port	8/14/2007	17:05:01	52.22	1.57	12.35	6.37	0.73	52.74	1.56	12.35	6.37	0.78
U2-FO-3, SW Port	8/14/2007	17:06:01	52.09	1.59	12.35	6.37	0.73	52.69	1.56	12.35	6.37	0.78
U2-FO-3, SW Port	8/14/2007	17:07:01	51.85	1.61	12.35	6.37	0.72	52.63	1.56	12.35	6.37	0.77
U2-FO-3, SW Port	8/14/2007	17:08:01	51.61	1.61	12.35	6.37	0.72	52.56	1.57	12.35	6.37	0.77
U2-FO-3, SW Port	8/14/2007	17:09:01	51.61	1.61	12.35	6.37	0.71	52.49	1.57	12.35	6.37	0.76
END U2-FO-3, SW Port	8/14/2007	17:10:01	51.73	1.59	12.35	6.37	0.72	51.73	1.59	12.35	6.37	0.72
START U2-FO-3, SE Port	8/14/2007	17:15:02	52.46	1.75	12.30	6.41	0.82	52.46	1.75	12.30	6.41	0.82
U2-FO-3, SE Port	8/14/2007	17:16:02	52.46	1.68	12.30	6.39	0.81	52.52	1.71	12.30	6.40	0.82
U2-FO-3, SE Port	8/14/2007	17:17:02	52.46	1.68	12.30	6.41	0.83	52.54	1.70	12.30	6.40	0.82
U2-FO-3, SE Port	8/14/2007	17:18:02	52.58	1.68	12.30	6.41	0.83	52.52	1.69	12.30	6.41	0.82
U2-FO-3, SE Port	8/14/2007	17:19:02	52.46	1.70	12.30	6.41	0.83	52.51	1.68	12.30	6.41	0.82
U2-FO-3, SE Port	8/14/2007	17:20:02	52.58	1.64	12.30	6.41	0.83	52.52	1.68	12.30	6.41	0.83
U2-FO-3, SE Port	8/14/2007	17:21:02	52.46	1.64	12.30	6.41	0.85	52.52	1.68	12.30	6.41	0.83
U2-FO-3, SE Port	8/14/2007	17:22:02	52.34	1.70	12.30	6.41	0.83	52.50	1.67	12.30	6.41	0.83
U2-FO-3, SE Port	8/14/2007	17:23:02	51.97	1.70	12.30	6.41	0.83	52.45	1.68	12.30	6.41	0.83
U2-FO-3, SE Port	8/14/2007	17:24:02	51.85	1.70	12.30	6.41	0.82	52.39	1.68	12.30	6.41	0.83
U2-FO-3, SE Port	8/14/2007	17:25:02	51.85	1.72	12.33	6.41	0.82	52.34	1.68	12.30	6.41	0.83
U2-FO-3, SE Port	8/14/2007	17:26:02	51.97	1.72	12.33	6.39	0.83	52.30	1.69	12.30	6.41	0.83
U2-FO-3, SE Port	8/14/2007	17:27:02	51.36	1.75	12.38	6.35	0.83	52.24	1.69	12.31	6.41	0.83
U2-FO-3, SE Port	8/14/2007	17:28:02	51.00	1.75	12.35	6.37	0.83	52.15	1.70	12.31	6.40	0.83
U2-FO-3, SE Port	8/14/2007	17:29:02	51.24	1.77	12.35	6.37	0.82	52.08	1.70	12.31	6.40	0.83
END U2-FO-3, SE Port	8/14/2007	17:30:02	51.12	1.73	12.35	6.37	0.87	51.12	1.73	12.35	6.37	0.87

Plant DeSoto, Unit CT2 - FO, Logged Data Records

Run Number	Date	Time	NOx (ppmv)	CO (ppmv)	O2 (%)	CO2 (%)	THC (ppmv)	AVE NOx (ppmv)	AVE CO (ppmv)	AVE O2 (%)	AVE CO2 (%)	AVE THC (ppmv)
START U2-FO-3, NE Port	8/14/2007	17:35:01	52.58	1.75	12.30	6.41	1.11	52.58	1.75	12.30	6.41	1.11
U2-FO-3, NE Port	8/14/2007	17:36:01	52.46	1.66	12.30	6.41	1.10	52.49	1.72	12.30	6.41	1.10
U2-FO-3, NE Port	8/14/2007	17:37:01	52.46	1.68	12.30	6.41	1.09	52.47	1.69	12.30	6.41	1.10
U2-FO-3, NE Port	8/14/2007	17:38:01	52.34	1.68	12.30	6.41	1.09	52.45	1.69	12.30	6.41	1.10
U2-FO-3, NE Port	8/14/2007	17:39:01	52.34	1.64	12.30	6.41	1.10	52.43	1.68	12.30	6.41	1.10
U2-FO-3, NE Port	8/14/2007	17:40:01	52.46	1.68	12.30	6.41	1.11	52.42	1.67	12.30	6.41	1.10
U2-FO-3, NE Port	8/14/2007	17:41:01	52.34	1.68	12.30	6.41	1.11	52.40	1.67	12.30	6.41	1.10
U2-FO-3, NE Port	8/14/2007	17:42:01	51.97	1.64	12.33	6.41	1.11	52.37	1.67	12.30	6.41	1.10
U2-FO-3, NE Port	8/14/2007	17:43:01	51.85	1.63	12.33	6.41	1.10	52.31	1.66	12.31	6.41	1.10
U2-FO-3, NE Port	8/14/2007	17:44:01	51.97	1.66	12.33	6.39	1.11	52.26	1.66	12.31	6.41	1.10
U2-FO-3, NE Port	8/14/2007	17:45:01	51.73	1.66	12.33	6.41	1.11	52.22	1.66	12.31	6.41	1.10
U2-FO-3, NE Port	8/14/2007	17:46:01	51.85	1.61	12.33	6.39	1.12	52.19	1.66	12.31	6.41	1.11
U2-FO-3, NE Port	8/14/2007	17:47:01	51.48	1.63	12.35	6.37	1.14	52.15	1.66	12.31	6.41	1.11
U2-FO-3, NE Port	8/14/2007	17:48:01	51.24	1.68	12.35	6.39	1.17	52.09	1.65	12.32	6.41	1.11
U2-FO-3, NE Port	8/14/2007	17:49:01	51.12	1.66	12.35	6.37	1.16	52.02	1.65	12.32	6.41	1.11
END U2-FO-3, NE Port	8/14/2007	17:50:01	51.24	1.64	12.35	6.37	1.16	51.97	1.65	12.32	6.40	1.12
START U2-FO-3, NW Port	8/14/2007	17:55:01	51.73	1.64	12.33	6.37	1.27	51.73	1.64	12.33	6.37	1.27
U2-FO-3, NW Port	8/14/2007	17:56:01	51.48	1.63	12.33	6.37	1.26	51.56	1.65	12.33	6.38	1.26
U2-FO-3, NW Port	8/14/2007	17:57:00	51.61	1.59	12.33	6.37	1.27	51.56	1.64	12.33	6.37	1.26
U2-FO-3, NW Port	8/14/2007	17:58:00	51.48	1.61	12.33	6.37	1.28	51.56	1.64	12.33	6.37	1.27
U2-FO-3, NW Port	8/14/2007	17:59:01	51.61	1.63	12.33	6.37	1.30	51.56	1.63	12.33	6.37	1.27
U2-FO-3, NW Port	8/14/2007	18:00:01	51.61	1.61	12.33	6.37	1.33	51.55	1.63	12.33	6.37	1.28
U2-FO-3, NW Port	8/14/2007	18:01:01	51.61	1.61	12.35	6.37	1.32	51.56	1.63	12.33	6.37	1.29
U2-FO-3, NW Port	8/14/2007	18:02:01	51.48	1.64	12.35	6.37	1.31	51.56	1.63	12.33	6.37	1.29
U2-FO-3, NW Port	8/14/2007	18:03:01	51.24	1.61	12.35	6.37	1.30	51.52	1.63	12.33	6.37	1.29
U2-FO-3, NW Port	8/14/2007	18:04:01	51.00	1.66	12.35	6.37	1.29	51.48	1.63	12.33	6.37	1.29
U2-FO-3, NW Port	8/14/2007	18:05:01	51.00	1.64	12.35	6.37	1.27	51.44	1.63	12.34	6.37	1.29
U2-FO-3, NW Port	8/14/2007	18:06:01	51.00	1.59	12.35	6.37	1.25	51.40	1.63	12.34	6.37	1.29
U2-FO-3, NW Port	8/14/2007	18:07:01	50.51	1.66	12.40	6.33	1.30	51.35	1.63	12.34	6.37	1.29
U2-FO-3, NW Port	8/14/2007	18:08:01	50.26	1.64	12.40	6.35	1.25	51.28	1.63	12.35	6.37	1.29
U2-FO-3, NW Port	8/14/2007	18:09:01	50.26	1.64	12.40	6.33	1.28	51.20	1.63	12.35	6.37	1.28
END U2-FO-3, NW Port	8/14/2007	18:10:01	50.14	1.64	12.43	6.31	1.27	50.14	1.64	12.43	6.31	1.27

APPENDIX D
SOURCE CEMS TEST DATA

1. CT1 – Natural Gas
2. CT2 – Natural Gas

D-1
CT1 – Natural Gas

RATA Test Run #1

Record#	DATE	TIME	NOX11	NOXRT12	OXY13	NOXDRY14
1	08/19/2007	122100	9.810	0.030	13.730	8.100
2	08/19/2007	122200	9.810	0.030	13.730	8.100
3	08/19/2007	122300	9.790	0.030	13.730	8.100
4	08/19/2007	122400	9.800	0.030	13.730	8.100
5	08/19/2007	122500	9.800	0.030	13.720	8.100
6	08/19/2007	122600	9.780	0.030	13.740	8.100
7	08/19/2007	122700	9.870	0.030	13.730	8.100
8	08/19/2007	122800	9.840	0.030	13.730	8.100
9	08/19/2007	122900	9.900	0.030	13.730	8.100
10	08/19/2007	123000	9.910	0.030	13.730	8.100
11	08/19/2007	123100	9.890	0.030	13.740	8.100
12	08/19/2007	123200	9.840	0.030	13.740	8.100
13	08/19/2007	123300	9.890	0.030	13.730	8.100
14	08/19/2007	123400	9.830	0.030	13.740	8.100
15	08/19/2007	123500	9.870	0.030	13.750	8.100
16	08/19/2007	123600	9.840	0.030	13.750	8.100
17	08/19/2007	123700	9.810	0.030	13.740	8.100
18	08/19/2007	123800	9.850	0.030	13.740	8.100
19	08/19/2007	123900	9.850	0.030	13.740	8.100
20	08/19/2007	124000	9.840	0.030	13.730	8.100
21	08/19/2007	124100	9.730	0.030	13.730	8.000
22	/ /					
23	/ /	AVE	9.836	0.030	13.735	8.095

RATA Test Run #2

Record#	DATE	TIME	NOX11	NOXRT12	OXY13	NOXDRY14
1	08/19/2007	125900	9.820	0.030	13.730	8.100
2	08/19/2007	130000	9.880	0.030	13.730	8.100
3	08/19/2007	130100	9.940	0.030	13.730	8.200
4	08/19/2007	130200	9.900	0.030	13.730	8.100
5	08/19/2007	130300	9.860	0.030	13.720	8.100
6	08/19/2007	130400	9.800	0.030	13.730	8.100
7	08/19/2007	130500	9.760	0.029	13.740	8.100
8	08/19/2007	130600	9.810	0.030	13.740	8.100
9	08/19/2007	130700	9.860	0.030	13.740	8.100
10	08/19/2007	130800	9.880	0.030	13.730	8.100
11	08/19/2007	130900	9.920	0.030	13.740	8.200
12	08/19/2007	131000	9.900	0.030	13.740	8.100
13	08/19/2007	131100	9.980	0.030	13.750	8.200
14	08/19/2007	131200	9.970	0.030	13.760	8.200
15	08/19/2007	131300	9.950	0.030	13.760	8.200
16	08/19/2007	131400	9.970	0.030	13.740	8.200
17	08/19/2007	131500	9.890	0.030	13.740	8.200
18	08/19/2007	131600	9.890	0.030	13.750	8.200
19	08/19/2007	131700	9.890	0.030	13.730	8.100
20	08/19/2007	131800	9.880	0.030	13.730	8.100
21	08/19/2007	131900	9.840	0.030	13.730	8.100
22	/ /					
23	/ /	AVE	9.885	0.030	13.738	8.138

RATA Test Run #3

Record#	DATE	TIME	NOX11	NOXRT12	OXY13	NOXDRY14
1	08/19/2007	133400	9.850	0.030	13.730	8.100
2	08/19/2007	133500	9.820	0.030	13.730	8.100
3	08/19/2007	133600	9.850	0.030	13.730	8.100
4	08/19/2007	133700	9.830	0.030	13.730	8.100
5	08/19/2007	133800	9.890	0.030	13.730	8.100
6	08/19/2007	133900	9.900	0.030	13.730	8.100
7	08/19/2007	134000	9.860	0.030	13.730	8.100
8	08/19/2007	134100	9.880	0.030	13.720	8.100
9	08/19/2007	134200	9.860	0.030	13.730	8.100
10	08/19/2007	134300	9.700	0.030	13.730	8.000
11	08/19/2007	134400	9.730	0.029	13.740	8.000
12	08/19/2007	134500	9.770	0.030	13.730	8.000
13	08/19/2007	134600	9.810	0.030	13.730	8.100
14	08/19/2007	134700	9.810	0.030	13.720	8.100
15	08/19/2007	134800	9.760	0.030	13.730	8.000
16	08/19/2007	134900	9.760	0.030	13.720	8.000
17	08/19/2007	135000	9.750	0.030	13.730	8.000
18	08/19/2007	135100	9.810	0.030	13.730	8.100
19	08/19/2007	135200	9.760	0.030	13.720	8.000
20	08/19/2007	135300	9.740	0.030	13.720	8.000
21	08/19/2007	135400	9.720	0.029	13.710	7.900
22	/ /					
23	/ /	AVE	9.803	0.030	13.727	8.052

RATA Test Run #4

Record#	DATE	TIME	NOX11	NOXRT12	OXY13	NOXDRY14
1	08/19/2007	141000	9.720	0.029	13.710	8.000
2	08/19/2007	141100	9.660	0.029	13.720	7.900
3	08/19/2007	141200	9.670	0.029	13.730	8.000
4	08/19/2007	141300	9.680	0.029	13.720	7.900
5	08/19/2007	141400	9.650	0.029	13.720	7.900
6	08/19/2007	141500	9.760	0.030	13.720	8.000
7	08/19/2007	141600	9.780	0.030	13.720	8.000
8	08/19/2007	141700	9.850	0.030	13.720	8.100
9	08/19/2007	141800	9.820	0.030	13.720	8.100
10	08/19/2007	141900	9.810	0.030	13.710	8.100
11	08/19/2007	142000	9.800	0.030	13.700	8.000
12	08/19/2007	142100	9.860	0.030	13.700	8.100
13	08/19/2007	142200	9.790	0.030	13.710	8.000
14	08/19/2007	142300	9.800	0.030	13.720	8.000
15	08/19/2007	142400	9.800	0.030	13.710	8.100
16	08/19/2007	142500	9.790	0.030	13.700	8.000
17	08/19/2007	142600	9.780	0.030	13.710	8.000
18	08/19/2007	142700	9.790	0.030	13.700	8.000
19	08/19/2007	142800	9.760	0.030	13.700	8.000
20	08/19/2007	142900	9.760	0.029	13.710	8.000
21	08/19/2007	143000	9.790	0.030	13.710	8.100
22	/ /					
23	/ /	AVE	9.768	0.030	13.712	8.014

RATA Test Run #5

Record#	DATE	TIME	NOX11	NOXRT12	OXY13	NOXDRY14
1	08/19/2007	144400	9.710	0.029	13.720	8.000
2	08/19/2007	144500	9.690	0.029	13.710	7.900
3	08/19/2007	144600	9.760	0.030	13.710	8.000
4	08/19/2007	144700	9.830	0.030	13.710	8.100
5	08/19/2007	144800	9.880	0.030	13.700	8.100
6	08/19/2007	144900	9.900	0.030	13.710	8.100
7	08/19/2007	145000	9.930	0.030	13.720	8.200
8	08/19/2007	145100	9.880	0.030	13.710	8.100
9	08/19/2007	145200	9.880	0.030	13.700	8.100
10	08/19/2007	145300	9.890	0.030	13.700	8.100
11	08/19/2007	145400	9.840	0.030	13.710	8.100
12	08/19/2007	145500	9.920	0.030	13.700	8.100
13	08/19/2007	145600	9.870	0.030	13.710	8.100
14	08/19/2007	145700	9.810	0.030	13.710	8.100
15	08/19/2007	145800	9.830	0.030	13.720	8.100
16	08/19/2007	145900	9.880	0.030	13.720	8.100
17	08/19/2007	150000	9.850	0.030	13.710	8.100
18	08/19/2007	150100	9.840	0.030	13.710	8.100
19	08/19/2007	150200	9.840	0.030	13.720	8.100
20	08/19/2007	150300	9.890	0.030	13.720	8.100
21	08/19/2007	150400	9.900	0.030	13.720	8.100
22	/ /					
23	/ /	AVE	9.849	0.030	13.711	8.086

RATA Test Run #6

Record#	DATE	TIME	NOX11	NOXRT12	OXY13	NOXDRY14
1	08/19/2007	151700	9.900	0.030	13.710	8.100
2	08/19/2007	151800	9.890	0.030	13.710	8.100
3	08/19/2007	151900	9.850	0.030	13.710	8.100
4	08/19/2007	152000	9.820	0.030	13.710	8.100
5	08/19/2007	152100	9.810	0.030	13.710	8.100
6	08/19/2007	152200	9.740	0.029	13.710	8.000
7	08/19/2007	152300	9.700	0.029	13.710	8.000
8	08/19/2007	152400	9.700	0.029	13.700	7.900
9	08/19/2007	152500	9.720	0.029	13.710	8.000
10	08/19/2007	152600	9.700	0.029	13.710	8.000
11	08/19/2007	152700	9.680	0.029	13.710	7.900
12	08/19/2007	152800	9.670	0.029	13.710	7.900
13	08/19/2007	152900	9.680	0.029	13.710	7.900
14	08/19/2007	153000	9.770	0.030	13.720	8.100
15	08/19/2007	153100	9.790	0.030	13.720	8.000
16	08/19/2007	153200	9.780	0.030	13.720	8.000
17	08/19/2007	153300	9.760	0.030	13.710	8.000
18	08/19/2007	153400	9.650	0.029	13.710	7.900
19	08/19/2007	153500	9.680	0.029	13.720	7.900
20	08/19/2007	153600	9.730	0.029	13.710	8.000
21	08/19/2007	153700	9.780	0.030	13.700	8.000
22	/ /					
23	/ /	AVE	9.752	0.029	13.711	8.000

RATA Test Run #7

Record#	DATE	TIME	NOX11	NOXRT12	OXY13	NOXDRY14
1	08/19/2007	155300	9.770	0.030	13.710	8.000
2	08/19/2007	155400	9.780	0.030	13.700	8.000
3	08/19/2007	155500	9.730	0.029	13.710	8.000
4	08/19/2007	155600	9.740	0.029	13.690	8.000
5	08/19/2007	155700	9.700	0.029	13.700	7.900
6	08/19/2007	155800	9.750	0.029	13.700	8.000
7	08/19/2007	155900	9.770	0.030	13.710	8.000
8	08/19/2007	160000	9.820	0.030	13.710	8.100
9	08/19/2007	160100	9.810	0.030	13.720	8.100
10	08/19/2007	160200	9.770	0.030	13.720	8.000
11	08/19/2007	160300	9.790	0.030	13.710	8.000
12	08/19/2007	160400	9.810	0.030	13.720	8.100
13	08/19/2007	160500	9.780	0.030	13.710	8.000
14	08/19/2007	160600	9.790	0.030	13.700	8.000
15	08/19/2007	160700	9.790	0.030	13.690	8.000
16	08/19/2007	160800	9.760	0.030	13.710	8.000
17	08/19/2007	160900	9.780	0.030	13.720	8.000
18	08/19/2007	161000	9.770	0.030	13.720	8.000
19	08/19/2007	161100	9.770	0.030	13.720	8.000
20	08/19/2007	161200	9.710	0.029	13.710	8.000
21	08/19/2007	161300	9.740	0.030	13.710	8.000
22	/ /					
23	/ /	AVE	9.768	0.030	13.709	8.010

RATA Test Run #8

Record#	DATE	TIME	NOX11	NOXRT12	OXY13	NOXDRY14
1	08/19/2007	162900	9.760	0.030	13.720	8.000
2	08/19/2007	163000	9.780	0.030	13.720	8.000
3	08/19/2007	163100	9.770	0.030	13.720	8.000
4	08/19/2007	163200	9.820	0.030	13.720	8.100
5	08/19/2007	163300	9.800	0.030	13.730	8.100
6	08/19/2007	163400	9.820	0.030	13.710	8.100
7	08/19/2007	163500	9.880	0.030	13.710	8.100
8	08/19/2007	163600	9.850	0.030	13.720	8.100
9	08/19/2007	163700	9.840	0.030	13.720	8.100
10	08/19/2007	163800	9.830	0.030	13.710	8.100
11	08/19/2007	163900	9.810	0.030	13.720	8.100
12	08/19/2007	164000	9.780	0.030	13.700	8.000
13	08/19/2007	164100	9.790	0.030	13.710	8.000
14	08/19/2007	164200	9.780	0.030	13.710	8.000
15	08/19/2007	164300	9.780	0.030	13.700	8.000
16	08/19/2007	164400	9.780	0.030	13.710	8.000
17	08/19/2007	164500	9.780	0.030	13.700	8.000
18	08/19/2007	164600	9.780	0.030	13.710	8.000
19	08/19/2007	164700	9.750	0.030	13.710	8.000
20	08/19/2007	164800	9.770	0.030	13.710	8.000
21	08/19/2007	164900	9.740	0.029	13.700	8.000
22	/ /					
23	/ /	AVE	9.795	0.030	13.712	8.038

RATA Test Run #9

Record#	DATE	TIME	NOX11	NOXRT12	OXY13	NOXDRY14
1	08/19/2007	170300	9.800	0.030	13.710	8.000
2	08/19/2007	170400	9.850	0.030	13.710	8.100
3	08/19/2007	170500	9.800	0.030	13.700	8.100
4	08/19/2007	170600	9.800	0.030	13.700	8.000
5	08/19/2007	170700	9.800	0.030	13.710	8.100
6	08/19/2007	170800	9.770	0.030	13.710	8.000
7	08/19/2007	170900	9.810	0.030	13.700	8.100
8	08/19/2007	171000	9.780	0.030	13.710	8.000
9	08/19/2007	171100	9.770	0.030	13.710	8.000
10	08/19/2007	171200	9.730	0.029	13.700	8.000
11	08/19/2007	171300	9.760	0.030	13.700	8.000
12	08/19/2007	171400	9.770	0.029	13.690	8.000
13	08/19/2007	171500	9.750	0.029	13.700	8.000
14	08/19/2007	171600	9.740	0.029	13.700	8.000
15	08/19/2007	171700	9.730	0.029	13.690	8.000
16	08/19/2007	171800	9.700	0.029	13.700	7.900
17	08/19/2007	171900	9.730	0.029	13.700	7.900
18	08/19/2007	172000	9.680	0.029	13.690	7.900
19	08/19/2007	172100	9.680	0.029	13.700	7.900
20	08/19/2007	172200	9.740	0.029	13.690	8.000
21	08/19/2007	172300	9.780	0.030	13.700	8.000
22	/ /					
23	/ /	AVE	9.760	0.030	13.701	8.000

D-2
CT2 – Natural Gas

RATA Test Run #1

Record#	DATE	TIME	NOX21	NOXRT22	OXY23	NOXDRY24
1	08/18/2007	123100	10.630	0.032	13.660	8.700
2	08/18/2007	123200	10.600	0.032	13.660	8.700
3	08/18/2007	123300	10.570	0.032	13.660	8.600
4	08/18/2007	123400	10.580	0.032	13.670	8.600
5	08/18/2007	123500	10.620	0.032	13.670	8.600
6	08/18/2007	123600	10.650	0.032	13.660	8.700
7	08/18/2007	123700	10.630	0.032	13.670	8.700
8	08/18/2007	123800	10.630	0.032	13.650	8.600
9	08/18/2007	123900	10.570	0.032	13.650	8.600
10	08/18/2007	124000	10.560	0.032	13.650	8.600
11	08/18/2007	124100	10.580	0.032	13.660	8.600
12	08/18/2007	124200	10.610	0.032	13.650	8.700
13	08/18/2007	124300	10.630	0.032	13.660	8.700
14	08/18/2007	124400	10.650	0.032	13.650	8.700
15	08/18/2007	124500	10.660	0.032	13.660	8.700
16	08/18/2007	124600	10.590	0.032	13.660	8.600
17	08/18/2007	124700	10.510	0.032	13.650	8.600
18	08/18/2007	124800	10.500	0.032	13.660	8.600
19	08/18/2007	124900	10.500	0.032	13.660	8.500
20	08/18/2007	125000	10.470	0.031	13.650	8.500
21	08/18/2007	125100	10.480	0.031	13.650	8.600
22	/ /					
23	/ /	AVE	10.582	0.032	13.658	8.629

RATA Test Run #2

Record#	DATE	TIME	NOX21	NOXRT22	OXY23	NOXDRY24
1	08/18/2007	131400	10.580	0.032	13.650	8.600
2	08/18/2007	131500	10.550	0.032	13.660	8.600
3	08/18/2007	131600	10.550	0.032	13.660	8.600
4	08/18/2007	131700	10.580	0.032	13.660	8.600
5	08/18/2007	131800	10.630	0.032	13.660	8.600
6	08/18/2007	131900	10.570	0.032	13.660	8.600
7	08/18/2007	132000	10.580	0.032	13.650	8.600
8	08/18/2007	132100	10.550	0.032	13.650	8.600
9	08/18/2007	132200	10.520	0.032	13.650	8.600
10	08/18/2007	132300	10.560	0.032	13.650	8.600
11	08/18/2007	132400	10.510	0.032	13.650	8.600
12	08/18/2007	132500	10.530	0.032	13.650	8.600
13	08/18/2007	132600	10.510	0.032	13.650	8.600
14	08/18/2007	132700	10.450	0.031	13.660	8.500
15	08/18/2007	132800	10.470	0.031	13.650	8.500
16	08/18/2007	132900	10.480	0.031	13.650	8.600
17	08/18/2007	133000	10.470	0.031	13.650	8.500
18	08/18/2007	133100	10.470	0.031	13.650	8.500
19	08/18/2007	133200	10.450	0.031	13.650	8.500
20	08/18/2007	133300	10.550	0.032	13.650	8.600
21	08/18/2007	133400	10.620	0.032	13.660	8.600
22	/ /					
23	/ /	AVE	10.532	0.032	13.653	8.576

RATA Test Run #3

Record#	DATE	TIME	NOX21	NOXRT22	OXY23	NOXDRY24
1	08/18/2007	135200	10.520	0.032	13.650	8.600
2	08/18/2007	135300	10.520	0.032	13.650	8.600
3	08/18/2007	135400	10.510	0.032	13.650	8.600
4	08/18/2007	135500	10.480	0.031	13.640	8.500
5	08/18/2007	135600	10.440	0.031	13.650	8.500
6	08/18/2007	135700	10.450	0.031	13.650	8.500
7	08/18/2007	135800	10.470	0.031	13.640	8.500
8	08/18/2007	135900	10.450	0.031	13.650	8.500
9	08/18/2007	140000	10.500	0.031	13.650	8.500
10	08/18/2007	140100	10.490	0.032	13.650	8.500
11	08/18/2007	140200	10.500	0.031	13.640	8.500
12	08/18/2007	140300	10.420	0.031	13.640	8.500
13	08/18/2007	140400	10.410	0.031	13.650	8.400
14	08/18/2007	140500	10.510	0.032	13.650	8.600
15	08/18/2007	140600	10.580	0.032	13.650	8.600
16	08/18/2007	140700	10.560	0.032	13.650	8.600
17	08/18/2007	140800	10.510	0.032	13.650	8.600
18	08/18/2007	140900	10.530	0.032	13.650	8.600
19	08/18/2007	141000	10.480	0.031	13.660	8.500
20	08/18/2007	141100	10.540	0.032	13.650	8.600
21	08/18/2007	141200	10.520	0.032	13.650	8.600
22	/ /					
23	/ /	AVE	10.495	0.032	13.649	8.543

RATA Test Run #4

Record#	DATE	TIME	NOX21	NOXRT22	OXY23	NOXDRY24
1	08/18/2007	142900	10.570	0.032	13.660	8.600
2	08/18/2007	143000	10.540	0.032	13.650	8.600
3	08/18/2007	143100	10.480	0.032	13.660	8.600
4	08/18/2007	143200	10.490	0.031	13.660	8.600
5	08/18/2007	143300	10.500	0.032	13.660	8.600
6	08/18/2007	143400	10.490	0.032	13.660	8.600
7	08/18/2007	143500	10.540	0.032	13.650	8.600
8	08/18/2007	143600	10.520	0.032	13.660	8.600
9	08/18/2007	143700	10.510	0.032	13.650	8.600
10	08/18/2007	143800	10.540	0.032	13.660	8.600
11	08/18/2007	143900	10.450	0.031	13.660	8.500
12	08/18/2007	144000	10.550	0.032	13.660	8.600
13	08/18/2007	144100	10.540	0.032	13.660	8.600
14	08/18/2007	144200	10.530	0.032	13.650	8.600
15	08/18/2007	144300	10.500	0.032	13.650	8.600
16	08/18/2007	144400	10.440	0.031	13.660	8.500
17	08/18/2007	144500	10.460	0.031	13.650	8.500
18	08/18/2007	144600	10.440	0.031	13.650	8.500
19	08/18/2007	144700	10.450	0.031	13.650	8.500
20	08/18/2007	144800	10.450	0.031	13.650	8.500
21	08/18/2007	144900	10.470	0.031	13.650	8.500
22	/ /					
23	/ /	AVE	10.498	0.032	13.655	8.567

RATA Test Run #5

Record#	DATE	TIME	NOX21	NOXRT22	OXY23	NOXDRY24
1	08/18/2007	150400	10.490	0.031	13.650	8.500
2	08/18/2007	150500	10.520	0.032	13.650	8.600
3	08/18/2007	150600	10.570	0.032	13.660	8.600
4	08/18/2007	150700	10.620	0.032	13.660	8.700
5	08/18/2007	150800	10.670	0.032	13.650	8.700
6	08/18/2007	150900	10.600	0.032	13.660	8.600
7	08/18/2007	151000	10.620	0.032	13.660	8.600
8	08/18/2007	151100	10.590	0.032	13.650	8.600
9	08/18/2007	151200	10.590	0.032	13.650	8.600
10	08/18/2007	151300	10.570	0.032	13.650	8.600
11	08/18/2007	151400	10.640	0.032	13.660	8.600
12	08/18/2007	151500	10.680	0.032	13.660	8.700
13	08/18/2007	151600	10.700	0.032	13.660	8.700
14	08/18/2007	151700	10.690	0.032	13.660	8.700
15	08/18/2007	151800	10.660	0.032	13.650	8.700
16	08/18/2007	151900	10.520	0.032	13.640	8.600
17	08/18/2007	152000	10.430	0.031	13.630	8.500
18	08/18/2007	152100	10.390	0.031	13.630	8.400
19	08/18/2007	152200	10.380	0.031	13.620	8.400
20	08/18/2007	152300	10.400	0.031	13.620	8.400
21	08/18/2007	152400	10.420	0.031	13.620	8.400
22	/ /					
23	/ /	AVE	10.560	0.032	13.647	8.581

RATA Test Run #6

Record#	DATE	TIME	NOX21	NOXRT22	OXY23	NOXDRY24
1	08/18/2007	153800	10.380	0.031	13.620	8.400
2	08/18/2007	153900	10.390	0.031	13.620	8.400
3	08/18/2007	154000	10.370	0.031	13.610	8.400
4	08/18/2007	154100	10.350	0.031	13.620	8.400
5	08/18/2007	154200	10.370	0.031	13.610	8.400
6	08/18/2007	154300	10.410	0.031	13.610	8.400
7	08/18/2007	154400	10.400	0.031	13.620	8.400
8	08/18/2007	154500	10.410	0.031	13.610	8.400
9	08/18/2007	154600	10.420	0.031	13.610	8.400
10	08/18/2007	154700	10.430	0.031	13.620	8.400
11	08/18/2007	154800	10.380	0.031	13.620	8.400
12	08/18/2007	154900	10.320	0.031	13.620	8.400
13	08/18/2007	155000	10.360	0.031	13.620	8.400
14	08/18/2007	155100	10.350	0.031	13.620	8.400
15	08/18/2007	155200	10.330	0.031	13.630	8.400
16	08/18/2007	155300	10.400	0.031	13.620	8.400
17	08/18/2007	155400	10.420	0.031	13.630	8.400
18	08/18/2007	155500	10.430	0.031	13.630	8.500
19	08/18/2007	155600	10.430	0.031	13.630	8.400
20	08/18/2007	155700	10.390	0.031	13.630	8.400
21	08/18/2007	155800	10.420	0.031	13.630	8.400
22	/ /					
23	/ /	AVE	10.389	0.031	13.620	8.405

RATA Test Run #7

Record#	DATE	TIME	NOX21	NOXRT22	OXY23	NOXDRY24
1	08/18/2007	161500	10.530	0.032	13.640	8.600
2	08/18/2007	161600	10.550	0.032	13.640	8.600
3	08/18/2007	161700	10.530	0.032	13.650	8.600
4	08/18/2007	161800	10.550	0.032	13.640	8.600
5	08/18/2007	161900	10.520	0.032	13.650	8.600
6	08/18/2007	162000	10.510	0.031	13.640	8.500
7	08/18/2007	162100	10.530	0.031	13.650	8.600
8	08/18/2007	162200	10.560	0.032	13.640	8.600
9	08/18/2007	162300	10.590	0.032	13.650	8.600
10	08/18/2007	162400	10.600	0.032	13.650	8.600
11	08/18/2007	162500	10.570	0.032	13.650	8.600
12	08/18/2007	162600	10.540	0.032	13.650	8.600
13	08/18/2007	162700	10.550	0.032	13.650	8.600
14	08/18/2007	162800	10.510	0.032	13.650	8.600
15	08/18/2007	162900	10.510	0.031	13.640	8.500
16	08/18/2007	163000	10.480	0.031	13.640	8.500
17	08/18/2007	163100	10.530	0.031	13.640	8.600
18	08/18/2007	163200	10.480	0.031	13.640	8.500
19	08/18/2007	163300	10.530	0.031	13.650	8.500
20	08/18/2007	163400	10.530	0.032	13.650	8.600
21	08/18/2007	163500	10.460	0.031	13.640	8.500
22	/ /					
23	/ /	AVE	10.531	0.032	13.645	8.571

RATA Test Run #8

Record#	DATE	TIME	NOX21	NOXRT22	OXY23	NOXDRY24
1	08/18/2007	165300	10.570	0.032	13.640	8.600
2	08/18/2007	165400	10.520	0.032	13.640	8.600
3	08/18/2007	165500	10.550	0.032	13.640	8.600
4	08/18/2007	165600	10.540	0.032	13.640	8.600
5	08/18/2007	165700	10.540	0.032	13.640	8.600
6	08/18/2007	165800	10.530	0.032	13.640	8.600
7	08/18/2007	165900	10.560	0.032	13.640	8.600
8	08/18/2007	170000	10.510	0.032	13.640	8.500
9	08/18/2007	170100	10.470	0.031	13.650	8.500
10	08/18/2007	170200	10.560	0.032	13.640	8.600
11	08/18/2007	170300	10.520	0.032	13.650	8.600
12	08/18/2007	170400	10.550	0.032	13.650	8.600
13	08/18/2007	170500	10.570	0.032	13.640	8.600
14	08/18/2007	170600	10.580	0.032	13.640	8.600
15	08/18/2007	170700	10.540	0.032	13.640	8.600
16	08/18/2007	170800	10.550	0.032	13.630	8.600
17	08/18/2007	170900	10.550	0.032	13.640	8.600
18	08/18/2007	171000	10.600	0.032	13.640	8.600
19	08/18/2007	171100	10.570	0.032	13.640	8.600
20	08/18/2007	171200	10.530	0.031	13.640	8.600
21	08/18/2007	171300	10.600	0.032	13.640	8.600
22	/ /					
23	/ /	AVE	10.548	0.032	13.641	8.590

RATA Test Run #9

Record#	DATE	TIME	NOX21	NOXRT22	OXY23	NOXDRY24
1	08/18/2007	172900	10.630	0.032	13.640	8.600
2	08/18/2007	173000	10.550	0.032	13.640	8.600
3	08/18/2007	173100	10.540	0.032	13.640	8.600
4	08/18/2007	173200	10.500	0.031	13.640	8.600
5	08/18/2007	173300	10.500	0.031	13.640	8.500
6	08/18/2007	173400	10.490	0.031	13.640	8.500
7	08/18/2007	173500	10.450	0.031	13.640	8.500
8	08/18/2007	173600	10.490	0.031	13.630	8.500
9	08/18/2007	173700	10.510	0.031	13.630	8.500
10	08/18/2007	173800	10.530	0.031	13.630	8.600
11	08/18/2007	173900	10.580	0.032	13.630	8.600
12	08/18/2007	174000	10.560	0.032	13.630	8.600
13	08/18/2007	174100	10.620	0.032	13.630	8.600
14	08/18/2007	174200	10.620	0.032	13.630	8.600
15	08/18/2007	174300	10.600	0.032	13.630	8.600
16	08/18/2007	174400	10.610	0.032	13.630	8.600
17	08/18/2007	174500	10.610	0.032	13.640	8.600
18	08/18/2007	174600	10.610	0.032	13.640	8.600
19	08/18/2007	174700	10.640	0.032	13.630	8.600
20	08/18/2007	174800	10.600	0.032	13.630	8.600
21	08/18/2007	174900	10.580	0.032	13.630	8.600
22	/ /					
23	/ /	AVE	10.563	0.032	13.634	8.576

APPENDIX E
OPACITY OBSERVATIONS

Visible Emission Observation Form

TRC
Environmental Corporation

Method Used (Circle One)	Method 9 (circled) 203A 203B Other:
Project Number	153032-0000-0000
Page	1 of 1

Company Name	Desoto County Generating Co., LLC
Facility Name	Desoto County Energy Park
Street Address	3800 Northeast Roan Street
City	Arcadia
State	FL
Zip	

Process: Combustion Turbine	Unit #: 1	Operating Mode:
Control Equipment: Dry Low NOx		Operating Mode: Normal

Describe Emission Point: 75' tall round stack, eastern most stack of two.

Height of Emiss. Pt. Start	~75'	End	SAME
Height of Emiss. Pt. Rel. to Observer Start	~75'	End	SAME
Distance to Emiss. Pt. Start	382.7'	End	382.7'
Direction to Emiss. Pt. (Degrees) Start	122°	End	SAME
Vertical Angle to Obs. Pt. Start	11.1°	End	11.1°
Direction to Obs. Pt. (Degrees) Start	122°	End	SAME

Distance and Direction to Observation Point from Emission Point: Start Same point End Same

Describe Emissions Start	None seen	End	SAME
Emission Color Start	N/A	End	SAME
Water Droplet Plume	Attached ☐ Detached ☐ None ☒		
Describe Plume Background Start	Sky	End	Same
Background Color Start	Blue/White/Grey	End	Same
Sky Conditions Start	Broken	End	SAME
Wind Speed Start	5-6 MPH	End	Same
Wind Direction Start	NE	End	NE
Ambient Temp. Start	94.6	End	94.0
Wet Bulb Temp.	79.7	RH Percent	50%

Source Layout Sketch

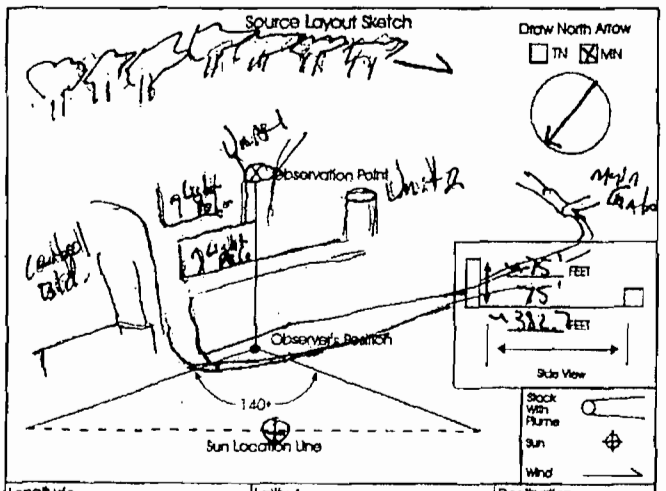

Longitude	81°48'42" W	
Latitude	27°13'30" N	
Declination	N/A	

Additional Information: Time is E.S.T.

Observation Date	8/19/07				Start Time	15:55		End Time	16:55
Min \ Sec	0	15	30	45	Min \ Sec	0	15	30	45
1	0	0	0	0	31	0	0	0	0
2	0	0	0	0	32	0	0	0	0
3	0	0	0	0	33	0	0	0	0
4	0	0	0	0	34	0	0	0	0
5	0	0	0	0	35	0	0	0	0
6	0	0	0	0	36	0	0	0	0
7	0	0	0	0	37	0	0	0	0
8	0	0	0	0	38	0	0	0	0
9	0	0	0	0	39	0	0	0	0
10	0	0	0	0	40	0	0	0	0
11	0	0	0	0	41	0	0	0	0
12	0	0	0	0	42	0	0	0	0
13	0	0	0	0	43	0	0	0	0
14	0	0	0	0	44	0	0	0	0
15	0	0	0	0	45	0	0	0	0
16	0	0	0	0	46	0	0	0	0
17	0	0	0	0	47	0	0	0	0
18	0	0	0	0	48	0	0	0	0
19	0	0	0	0	49	0	0	0	0
20	0	0	0	0	50	0	0	0	0
21	0	0	0	0	51	0	0	0	0
22	0	0	0	0	52	0	0	0	0
23	0	0	0	0	53	0	0	0	0
24	0	0	0	0	54	0	0	0	0
25	0	0	0	0	55	0	0	0	0
26	0	0	0	0	56	0	0	0	0
27	0	0	0	0	57	0	0	0	0
28	0	0	0	0	58	0	0	0	0
29	0	0	0	0	59	0	0	0	0
30	0	0	0	0	60	0	0	0	0

Observer's Name (Print)	Roger Paul Osier
Observer's Signature	Roger Paul Osier
Date	8/19/07
Organization	TRC
Certified By	Whitlow
Date	7/13/07

Visible Emission Observation Form

TRC
Environmental Corporation

Method Used (Circle One)			
(Method 9)	203A	203B	Other:

Project Number	Page	of
153032-0000-0000	1	1

Company Name	Desoto County Generating Co, LLC
Facility Name	Desoto County Energy Park
Street Address	5800 Northeast Roan Street
City	Arcadia
State	FL
Zip	

Process: Combustion Turbine	Unit #: 2	Operating Mode
Control Equipment: Dry Low NOx		Operating Mode: normal

Describe Emission Point: ~75' tall round stack, western stack of two.

Height of Emiss. Pt. Start	75'	Height of Emiss. Pt. Rel. to Observer Start	~75'
End	same	End	same
Distance to Emiss. Pt. Start	402'	Direction to Emiss. Pt. (Degrees) Start	161°
End	same	End	same
Vertical Angle to Obs. Pt. Start	10.9°	Direction to Obs. Pt. (Degrees) Start	161°
End	same	End	same

Distance and Direction to Observation Point from Emission Point
Start: same point End: same

Describe Emissions
Start: none seen End: same
Emission Color Start: N/A End: same
Water Droplet Plume: Attached ☐ Detached ☐ None ☒

Describe Plume Background
Start: sky End: sky

Background Color Start	Blue	End	Blue
Sky Conditions Start	clear	End	clear
Wind Speed Start	5-7 mph	End	4-6 mph
Wind Direction Start	NE	End	NE
Ambient Temp. Start	92	End	90.1
Wet Bulb Temp.	77	RH Percent	49%

Source Layout Sketch

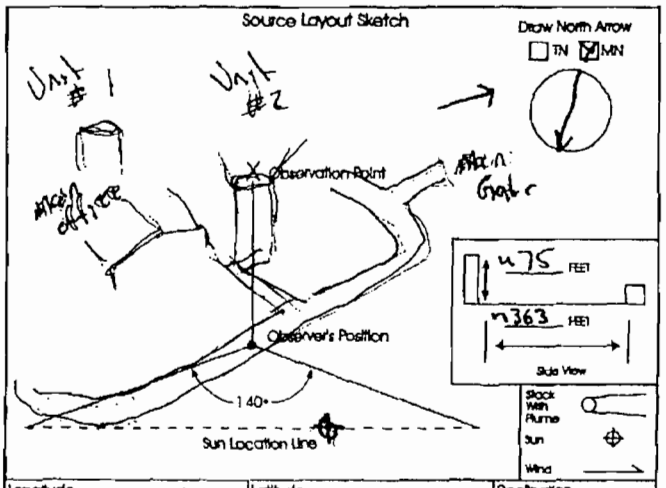

Longitude	Latitude	Declination
81° 48' 12" W	27° 13' 30" N	N/A

Additional Information: Time is E.S.T

Observation Date	Start Time	End Time
8/18/07	16:43	17:43

Min \ Sec	0	15	30	45	Min \ Sec	0	15	30	45
1	0	0	0	0	31	0	0	0	0
2	0	0	0	0	32	0	0	0	0
3	0	0	0	0	33	0	0	0	0
4	0	0	0	0	34	0	0	0	0
5	0	0	0	0	35	0	0	0	0
6	0	0	0	0	36	0	0	0	0
7	0	0	0	0	37	0	0	0	0
8	0	0	0	0	38	0	0	0	0
9	0	0	0	0	39	0	0	0	0
10	0	0	0	0	40	0	0	0	0
11	0	0	0	0	41	0	0	0	0
12	0	0	0	0	42	0	0	0	0
13	0	0	0	0	43	0	0	0	0
14	0	0	0	0	44	0	0	0	0
15	0	0	0	0	45	0	0	0	0
16	0	0	0	0	46	0	0	0	0
17	0	0	0	0	47	0	0	0	0
18	0	0	0	0	48	0	0	0	0
19	0	0	0	0	49	0	0	0	0
20	0	0	0	0	50	0	0	0	0
21	0	0	0	0	51	0	0	0	0
22	0	0	0	0	52	0	0	0	0
23	0	0	0	0	53	0	0	0	0
24	0	0	0	0	54	0	0	0	0
25	0	0	0	0	55	0	0	0	0
26	0	0	0	0	56	0	0	0	0
27	0	0	0	0	57	0	0	0	0
28	0	0	0	0	58	0	0	0	0
29	0	0	0	0	59	0	0	0	0
30	0	0	0	0	60	0	0	0	0

Observer's Name (Print)	Roger Paul Osier
Observer's Signature	Roger Paul Osier
Date	8/18/07
Organization	TRC
Certified By	Whitlow
Date	7/13/07

BEST AVAILABLE COPY

TRC

6322 NW 18th Drive
Suite 170
Gainesville, FL 32653

352.378.0332 PHONE
352.378.0354 FAX

www.TRCsolutions.com

Whitlow

318-361-2355
www.smokeschool.net

Whitlow Enterprises certifies that

Roger Osier

has met all of the requirements of EPA Method 9 Certification and is Qualified as a Visible Emissions Evaluator.

JUL 13 2007

This certification is valid for 6 months after the above date.

George Artie "Butch" Whitlow
President

Recertification dates are printed on the back of this card. Please bring this card to your next smoke school recertification.

Whitlow Enterprises, LLC

www.smokeschool.net

Certifies that

Roger Paul Osier of TRC Environmental

Has met all of the requirements of EPA Reference Method 9 and 22

And is qualified as a Visible Emissions Observer

Date: July 13, 2007

This certificate is valid for 6 months after the above date

George Artie "Butch" Whitlow

President

Visible Emissions Evaluation

This certifies that...

Roger Osier

...successfully completed a course in the methods of measurement of visible emissions from sources as specified by Federal Reference Methods 9 and 22 conducted by Eastern Technical Associates of Raleigh, North Carolina.

Jacksonville, Florida		May 31, 2005
Course Location		Date
President	Director of Training	Instructor

Visible Emission Observation Form

TRC
Environmental Corporation

Method Used (Circle One)			
(Method 9)	203A	203B	Other:

Project Number	Page	of
153032.0000.0000	1	1

Company Name	DeSoto County Generating CO. LLC
Facility Name	DeSoto Energy Park
Street Address	3800 North East Roan St.
City	Arcadia
State	FL
Zip	34266

Process	Combustion Turbine	Unit # 2	Operating Mode
Control Equipment	Dry Low NOx		Operating Mode Normal

Describe Emission Point: Gray Stack ~ 90' tall South of Control room, West of Unit 1

Height of Emiss. Pt.	Start ~90' End same	Height of Emiss. Pt. Rel. to Observer	Start ~90' End same
Distance to Emiss. Pt.	Start 158 yds End	Direction to Emiss. Pt. (Degrees)	Start 24° End same
Vertical Angle to Obs. Pt.	Start 11° End same	Direction to Obs. Pt. (Degrees)	Start 360 End same

Distance and Direction to Observation Point from Emission Point: Start same as above End same

Describe Emissions	Start None Visible	End same	
Emission Color	Start Clear End same	Water Droplet Plume	Attached ☐ Detached ☐ None ☑
Describe Plume Background	Start Sky	End same	
Background Color	Start Blue End same	Sky Conditions	Start Broken End same
Wind Speed	Start 0-3 End same	Wind Direction	Start SW End same
Ambient Temp.	Start 95 End 94	Wet Bulb Temp. 82	RH Percent 57.5

Source Layout Sketch

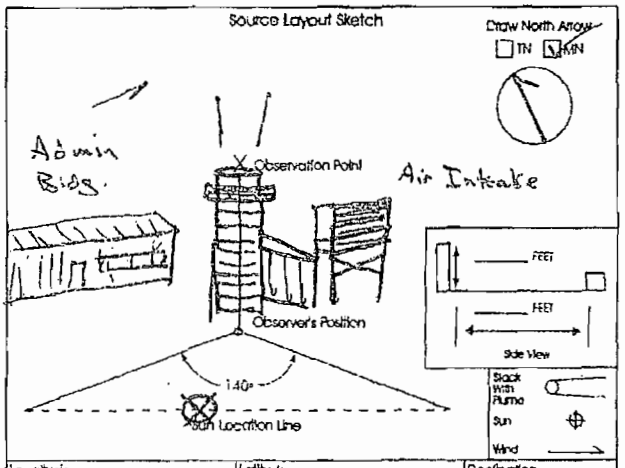

Longitude	Latitude	Declination
81° 48' 42" W	27° 13' 30" N	—

Additional Information:

Observation Date	Start Time	End Time
8/14/07	1419	1949

Min \ Sec	0	15	30	45	Min \ Sec	0	15	30	45
1	0	0	0	0	31				
2	0	0	0	0	32				
3	0	0	0	0	33				
4	0	0	0	0	34				
5	0	0	0	0	35				
6	0	0	0	0	36				
7	0	0	0	0	37				
8	0	0	0	0	38				
9	0	0	0	0	39				
10	0	0	0	0	40				
11	0	0	0	0	41				
12	0	0	0	0	42				
13	0	0	0	0	43				
14	0	0	0	0	44				
15	0	0	0	0	45				
16	0	0	0	0	46				
17	0	0	0	0	47				
18	0	0	0	0	48				
19	0	0	0	0	49				
20	0	0	0	0	50				
21	0	0	0	0	51				
22	0	0	0	0	52				
23	0	0	0	0	53				
24	0	0	0	0	54				
25	0	0	0	0	55				
26	0	0	0	0	56				
27	0	0	0	0	57				
28	0	0	0	0	58				
29	0	0	0	0	59				
30	0	0	0	0	60				

Observer's Name (Print)	Chris Hanks
Observer's Signature	Ch Hn
Date	8/14/07
Organization	TRC
Certified By	Whitlow
Date	7/13/07

BEST AVAILABLE COPY

6322 NW 18th Drive
Suite 170
Gainesville, FL 32653

352.378.0332 PHONE
352.378.0354 FAX

www.TRCsolutions.com

318-361-2355
www.smokeschool.net

Whitlow Enterprises certifies that

CHRIS HANK

has met all of the requirements of EPA Method 9 Certification and is Qualified as a Visible Emissions Evaluator.

JUL 13 2007

This certification is valid for 6 months after the above date.

George Artie "Butch" Whitlow
President

Recertification dates are printed on the back of this card. Please bring this card to your next smoke school for recertification.

Whitlow Enterprises, LLC

www.smokeschool.net

Certifies that

Chris Hank of TRC Environmental

Has met all of the requirements of EPA Reference Method 9 and 22

And is qualified as a Visible Emissions Observer

Date: July 13, 2007

This certificate is valid for 6 months after the above date

George Artie "Butch" Whitlow

President

Visible Emissions Evaluation

This certifies that...

Christopher Hank

...successfully completed a course in the methods of measurement of visible emissions from sources as specified by Federal Reference Methods 9 and 22 conducted by Eastern Technical Associates of Raleigh, North Carolina.

Jacksonville, Florida		May 30, 2006
Course Location		Date
President	Director of Training	Marty J. Hughes Instructor

APPENDIX F
FUEL ANALYSIS

8210 Mosley Rd.
Houston, TX 77075
713 943-9776 Telephone
713 943-3846 Facsimile

CORE LABORATORIES

LEONARD BRENNER
TRC ENVIRONMENTAL CORP
6322 NW 18TH DR, SUITE 170
GAINESVILLE, FL 32653

Sample Number:	173422-001
Sample Date:	8/14/07
Date Reported:	8/23/07
Date Received:	8/21/07
Sample ID:	Desoto 1
Description:	Diesel Fuel

Analytical Report

Test	Result	Units	Method	Date	Analyst
BTU, Gross	19486	BTU/lb	ASTM D-240	8/22/07	ANM
Sulfur, Total by X-Ray Fluoresc.	0.037	WT %	ASTM D-4294	8/21/07	ANM

Approved By: _____

Pat Gideons
Laboratory Supervisor

The analytical results, opinions or interpretations contained in this report are based upon information and material supplied by the client for whose exclusive and confidential use this report has been made. The analytical results, opinions or interpretations expressed represent the best judgment of Core Laboratories. Core Laboratories, however, makes no warranty or representation, express or implied, of any type, and expressly disclaims same as to the productivity, proper operations or profitableness of any oil, gas, coal, or other mineral, property, well or sand in connection with which such report is used or relied upon for any reason whatsoever. This report shall not be reproduced, in whole or in part, without the written approval of Core Laboratories.

FLORIDA GAS TRANSMISSION
FGT Chromatograph

Station 8043 FPL/FT MYERS

Date	BTU	CO2	N2	Grav	Methan	Ethane	Propan	Ibutan	Nbutan	Ipenta	Npenta	C6	C7	C8	C9	Wobbe	_CHDP
8/19/2007	1031	0.967	0.407	0.585	0	0	0	0	0	0	0	0	0	0	0	1347.168	NA
8/18/2007	1031	0.967	0.407	0.585	0	0	0	0	0	0	0	0	0	0	0	1347.171	NA

APPENDIX G
TURBINE OPERATIONAL DATA

1. CT1 - Natural Gas
2. CT2 – Natural Gas
3. CT2 – Fuel Oil

G-1
CT1 – Natural Gas

UNIT 1 8/19/07

BEST AVAILABLE COPY

Test Run #1	Time	Air Temp	Barometer	Humidity	Dew Point	Gas Flow	Micro-mot	Megawatt	Water Injection	Exh. Temp	Inlet Air D/P
	EDT	2-MAX-CM	2-BAR-P	2-HUMIDIT	2-INLET-D	2-NAT-GA	2-MICROM	2-DWATT2-	2-WTR-IN-F	2-CT-EXH-M	2-INLET-TOTAL-P
		°F	"HG	%	°F	LBS./SEC	GPM	MW	LBS./SEC	°F	"H2O
	13:20	91.643	29.956	47.035	67.882	19.27	0.156	151.311	-0.003	1152.673	3.37
	13:21	91.67	29.956	45.863	67.81	19.302	0.156	151.617	-0.003	1152.581	3.37
	13:22	91.697	29.956	46.005	67.738	19.334	0.156	151.423	-0.003	1152.49	3.37
	13:23	91.725	29.956	46.577	67.666	19.338	0.156	151.43	-0.003	1152.678	3.37
	13:24	91.752	29.956	46.851	67.594	19.334	0.156	150.851	-0.003	1153.153	3.37
	13:25	91.78	29.956	44.728	67.585	19.301	0.156	151.871	-0.003	1152.725	3.37
	13:26	91.807	29.955	46.041	67.668	19.265	0.156	151.321	-0.003	1153.073	3.366
	13:27	91.835	29.955	44.096	67.751	19.278	0.156	151.763	-0.003	1152.338	3.372
	13:28	91.862	29.955	45.085	67.833	19.292	0.156	151.645	-0.003	1152.361	3.378
	13:29	91.89	29.955	45.923	67.916	19.306	0.156	151.649	-0.003	1152.384	3.383
	13:30	91.917	29.955	45.94	67.999	19.32	0.156	151.386	-0.003	1152.407	3.385
	13:31	91.945	29.955	44.381	68.081	19.334	0.156	152.023	-0.003	1152.391	3.373
	13:32	91.972	29.955	45.469	68.164	19.348	0.156	151.644	-0.003	1152.32	3.503
	13:33	92	29.955	45.368	68.247	19.362	0.156	151.043	-0.003	1152.248	3.34
	13:34	92.027	29.955	45.912	68.329	19.376	0.156	151.509	-0.003	1152.177	3.386
	13:35	92.055	29.955	45.326	68.412	19.39	0.156	151.753	-0.003	1152.105	3.425
	13:36	92.082	29.954	45.136	68.495	19.404	0.156	151.306	-0.002	1152.052	3.45
	13:37	92.11	29.954	45.432	68.577	19.159	0.156	151.602	-0.002	1152.227	3.393
	13:38	92.137	29.954	45.586	68.66	19.27	0.156	151.554	-0.002	1152.343	3.336
	13:39	92.165	29.954	45.686	68.743	19.27	0.156	150.756	-0.002	1153.971	3.371
	13:40	91.888	29.954	45.53	68.812	19.27	0.156	150.869	-0.002	1153.576	3.381
	AVG	91.90281	29.95505	45.61762	68.09343	19.31062	0.156	151.4441	-0.002761905	1152.5844	3.383904762

Test Run #2	Time	Air Temp	Barometer	Humidity	Dew Point	Gas Flow	Micro-mot	Megawatt	Water Injection	Exh. Temp	Inlet Air D/P
	EDT	2-MAX-CM	2-BAR-P	2-HUMIDIT	2-INLET-D	2-NAT-GA	2-MICROM	2-DWATT2-	2-WTR-IN-F	2-CT-EXH-M	2-INLET-TOTAL-P
		°F	"HG	%	°F	LBS./SEC	GPM	MW	LBS./SEC	°F	"H2O
	13:58	91.673	29.952	46.146	66.965	19.226	0.156	151.744	-0.002	1152.27	3.381
	13:59	91.692	29.952	45.023	66.889	19.311	0.156	151.832	-0.002	1152.292	3.402
	14:00	91.712	29.952	45.853	66.813	19.304	0.156	151.798	-0.002	1152.313	3.422
	14:01	91.732	29.952	46.103	66.737	19.298	0.156	151.491	-0.002	1152.335	3.385
	14:02	91.752	29.951	46.575	66.661	19.291	0.156	151.132	-0.001	1153.064	3.4
	14:03	91.772	29.951	45.789	66.585	19.205	0.156	150.837	-0.001	1153.289	3.415
	14:04	91.792	29.951	45.523	66.508	19.282	0.156	151.145	-0.001	1153.615	3.427
	14:05	91.812	29.951	44.667	66.432	19.274	0.156	151.612	-0.001	1152.79	3.364
	14:06	91.831	29.951	45.41	66.356	19.267	0.156	151.008	-0.001	1153.039	3.422
	14:07	91.851	29.951	43.118	66.188	19.26	0.156	151.802	-0.001	1151.949	3.457
	14:08	91.871	29.951	44.083	65.735	19.253	0.156	151.051	-0.001	1152.675	3.475
	14:09	91.891	29.951	42.863	65.281	19.245	0.156	151.455	-0.001	1151.812	3.493
	14:10	91.911	29.95	42.014	65.484	19.238	0.156	151.406	-0.001	1152.448	3.512
	14:11	91.931	29.95	40.584	65.752	19.231	0.156	151.147	-0.001	1152.621	3.525
	14:12	91.951	29.95	41.222	66.02	19.224	0.156	151.562	-0.001	1152.794	3.469
	14:13	91.97	29.95	43.777	66.333	19.239	0.156	150.815	-0.001	1152.966	3.443
	14:14	91.99	29.95	43.298	66.787	19.269	0.156	150.944	-0.001	1153.095	3.394
	14:15	92.01	29.95	43.597	67.24	19.271	0.156	150.665	-0.001	1153.192	3.394
	14:16	92.03	29.95	44.095	67.566	19.273	0.156	151.199	-0.001	1153.289	3.392
	14:17	92.05	29.95	44.028	67.496	19.274	0.156	150.985	-0.001	1153.386	3.389
	14:18	92.07	29.949	44.113	67.425	19.276	0.156	151.159	-0.001	1153.049	3.386
	AVG	91.87114	29.95071	44.18481	66.53586	19.26243	0.156	151.27567	-0.001190476	1152.7754	3.426047619

Test Run #3	Time	Air Temp	Barometer	Humidity	Dew Point	Gas Flow	Micro-mot	Megawatt	Water Injection	Exh. Temp	Inlet Air D/P
	EDT	2-MAX-CM	2-BAR-P	2-HUMIDIT	2-INLET-D	2-NAT-GA	2-MICROM	2-DWATT2-	2-WTR-IN-F	2-CT-EXH-M	2-INLET-TOTAL-P
		°F	"HG	%	°F	LBS./SEC	GPM	MW	LBS./SEC	°F	"H2O
	14:33	92.223	29.948	43.879	67.741	19.171	0.156	150.791	-0.001	1153.152	3.449
	14:34	92.324	29.947	43.821	67.79	19.258	0.156	151.167	-0.001	1153.053	3.448
	14:35	91.536	29.947	44.102	67.839	19.257	0.156	150.922	-0.001	1152.954	3.447
	14:36	91.745	29.947	44.509	67.889	19.256	0.156	151.249	-0.001	1152.879	3.446
	14:37	91.954	29.947	43.739	67.938	19.255	0.156	151.439	-0.001	1153.093	3.445
	14:38	92.163	29.947	45.664	67.988	19.254	0.156	151.196	0	1153.308	3.444
	14:39	92.372	29.947	45.102	68.037	19.253	0.156	150.907	0	1153.522	3.443
	14:40	92.581	29.947	45.566	68.087	19.252	0.156	150.462	0	1153.345	3.442
	14:41	92.539	29.947	44.367	68.136	19.251	0.156	151.262	0	1153.336	3.441
	14:42	92.41	29.946	43.236	68.253	19.25	0.156	150.842	0	1153.707	3.44
	14:43	92.282	29.946	43.519	68.376	19.28	0.156	150.848	0	1153.155	3.561
	14:44	92.153	29.946	43.712	68.5	19.284	0.156	151.267	0	1152.846	3.455
	14:45	92.024	29.946	44.585	68.623	19.288	0.156	150.756	0	1152.886	3.49
	14:46	92.305	29.946	46.71	68.746	19.291	0.156	150.651	0	1154.486	3.338
	14:47	92.905	29.946	46.543	68.87	19.295	0.156	150.552	0	1153.745	3.364
	14:48	92.654	29.946	44.734	68.993	19.267	0.156	150.592	0	1153.922	3.39
	14:49	92.402	29.946	45.484	69.116	19.27	0.156	150.865	0	1153.75	3.415
	14:50	92.159	29.946	46.105	69.24	19.283	0.156	150.886	0	1153.692	3.445
	14:51	92.004	29.946	45.532	69.283	19.201	0.156	150.958	0	1153.335	3.506
	14:52	91.849	29.946	46.863	69.21	19.196	0.156	151.243	0	1153.632	3.491
	14:53	91.694	29.946	46.283	69.138	19.351	0.156	151.513	0	1153.426	3.476
	AVG	92.20371	29.94648	44.955	68.46633	19.26014	0.156	150.9699	-0.000238095	1153.3916	3.44647619
		91.99	29.95	49.98	67.70	19.2177		151.2		1152.9	3.42

Test Run #4	Time	Air Temp	Barometer	Humidity	Dew Point	Gas Flow	Micro-mot	Megawatt	Water Injection	Exh. Temp	Inlet Air D/P
	EDT	2-MAX-CM	2-BAR-P	2-HUMIDIT	2-INLET-D	2-NAT-GA	2-MICROM	2-DWATT2-	2-WTR-IN-F	2-CT-EXH-M	2-INLET-TOTAL-P
		°F	"HG	%	°F	LBS./SEC	GPM	MW	LBS./SEC	°F	"H2O
	15:09	91.352	29.94	47.713	69.566	19.252	0.156	151.338	0	1152.69	3.589
	15:10	91.572	29.94	47.961	69.58	19.246	0.156	151.248	0	1152.934	3.596
	15:11	91.793	29.939	47.356	69.594	19.24	0.156	150.988	0	1153.096	3.602
	15:12	92.013	29.939	48.031	69.608	19.233	0.156	150.96	0	1152.997	3.622
	15:13	91.983	29.939	46.424	69.621	19.227	0.156	151.315	0	1152.913	3.606
	15:14	91.928	29.939	46.978	69.635	19.245	0.156	151.024	0	1153.022	3.575
	15:15	91.873	29.938	46.871	69.649	19.292	0.156	151.085	0	1153.131	3.517
	15:16	91.818	29.938	47.155	69.663	19.292	0.156	151.51	0	1152.938	3.505
	15:17	91.763	29.938	47.339	69.676	19.292	0.156	151.284	0	1152.739	3.492
	15:18	90.409	29.937	47.955	69.69	19.291	0.156	151.968	0	1152.525	3.479
	15:19	90.443	29.937	49.302	69.704	19.291	0.156	152.398	0	1152.3	3.468
	15:20	90.478	29.937	49.313	69.718	19.291	0.156	152.289	0	1152.093	3.473
	15:21	90.512	29.937	49.081	69.732	19.29	0.156	152.288	0	1151.913	3.479
	15:22	90.546	29.936	49.172	69.745	19.29	0.156	152.126	0	1151.722	3.484
	15:23	90.58	29.936	49.739	69.759	19.29	0.156	152.104	-0.001	1151.52	3.49
	15:24	90.614	29.936	49.773	69.773	19.289	0.156	152.476	-0.001	1151.618	3.609
	15:25	90.648	29.936	50.82	69.787	19.339	0.156	152.587	-0.001	1151.716	3.562
	15:26	90.683	29.935	49.644	69.8	19.334	0.156	152.199	-0.001	1152.025	3.526
	15:27	90.717	29.935	50.553	69.814	19.329	0.156	151.661	-0.001	1152.489	3.491
	15:28	90.751	29.935	48.671	69.828	19.324	0.156	152.179	-0.001	1151.968	3.468
	15:29	90.785	29.934	50.502	69.842	19.319	0.156	151.98	-0.002	1152.242	3.485
	AVG	91.10767	29.93719	48.58824	69.704	19.28552	0.156	151.76224	-0.000380952	1152.4091	3.529428571

Test Run #5	Time	Air Temp	Barometer	Humidity	Dew Point	Gas Flow	Micro-motion	Flow Divid	Megawatt	Water Injection	Exh. Temp	Inlet Air D/P
	EDT											
		°F	"HG	%	°F	LBS./SEC	GPM	LBS./SEC	MW	LBS./SEC	°F	"H2O
	15:43	91.242	29.941	47.336	69.108	19.256	0.156	0	151.501	0	1152.567	3.586
	15:44	91.462	29.941	49.265	69.097	19.249	0.156	0	150.788	0	1152.812	3.592
	15:45	91.683	29.941	47.737	69.086	19.243	0.156	0	151.389	0	1153.057	3.599
	15:46	91.903	29.94	47.183	69.074	19.237	0.156	0	150.958	0	1153.046	3.617
	15:47	92.011	29.94	46.507	69.063	19.23	0.156	0	150.962	0	1152.947	3.614
	15:48	91.955	29.94	47.802	69.051	19.224	0.156	0	151.095	0	1152.968	3.597
	15:49	91.9	29.94	47.451	69.04	19.27	0.156	0	151.194	0	1153.077	3.539
	15:50	91.845	29.94	46.394	69.029	19.292	0.156	0	151.78	0	1152.671	3.511
	15:51	91.79	29.939	47.726	69.017	19.292	0.156	0	151.212	0	1152.838	3.498
	15:52	91.735	29.939	48.828	69.006	19.292	0.156	0	151.649	0	1152.638	3.485
	15:53	90.426	29.939	48.788	68.994	19.291	0.156	0	151.961	0	1152.412	3.473
	15:54	90.46	29.939	48.492	68.983	19.291	0.156	0	152.046	0	1152.187	3.47
	15:55	90.495	29.938	48.966	68.972	19.29	0.156	0	152.087	0	1152.003	3.476
	15:56	90.529	29.938	49.692	68.96	19.29	0.156	0	152.156	0	1151.823	3.482
	15:57	90.563	29.938	49.893	68.949	19.29	0.156	0	152.405	0	1151.609	3.487
	15:58	90.597	29.938	50.861	68.937	19.289	0.156	0	152.492	0	1151.569	3.493
	15:59	90.631	29.938	50.063	68.926	19.427	0.156	0	152.96	-0.001	1151.667	3.585
	16:00	90.666	29.937	51.324	68.915	19.337	0.156	0	152.171	-0.001	1151.793	3.543
	16:01	90.7	29.937	50.377	68.903	19.332	0.156	0	152.067	-0.001	1152.257	3.508
	16:02	90.734	29.937	51.07	68.892	19.327	0.156	0	152.325	-0.001	1152.013	3.473
	16:03	90.768	29.937	49.563	68.88	19.321	0.156	0	152.037	-0.001	1152.165	3.477
	16:04	90.802	29.936	49.374	68.869	19.316	0.156	0	151.87	-0.001	1152.319	3.494
	AVG	91.13168	29.93877	48.84964	68.98868	19.29027	0.156		151.7775	-0.000272727	1152.3835	3.527227273

Test Run #6	Time	Air Temp	Barometer	Humidity	Dew Point	Gas Flow	Micro-motion	Flow Divic	Megawatt	Water Injection	Exh. Temp	Inlet Air D/P
	EDT											
		°F	"HG	%	°F	LBS./SEC	GPM	LBS./SEC	MW	LBS./SEC	°F	"H2O
	16:16	92.292	29.926	45.905	69.431	19.256	0.156	0	151.51	0	1152.874	3.558
	16:17	92.332	29.926	46.743	69.463	19.249	0.156	0	151.162	0	1153.027	3.558
	16:18	92.498	29.925	45.541	69.494	19.243	0.156	0	150.927	0	1153.202	3.54
	16:19	92.707	29.925	46.505	69.526	19.237	0.156	0	151.065	0	1153.376	3.463
	16:20	92.917	29.925	46.031	69.558	19.23	0.156	0	150.932	0	1153.54	3.402
	16:21	93.126	29.925	45.666	69.59	19.224	0.156	0	150.935	0	1153.574	3.422
	16:22	93.06	29.924	46.324	69.622	19.27	0.156	0	150.768	0	1153.608	3.424
	16:23	92.966	29.924	47.401	69.61	19.292	0.156	0	150.588	0	1153.641	3.425
	16:24	92.873	29.924	47.429	69.593	19.292	0.156	0	150.737	0	1153.675	3.427
	16:25	92.779	29.924	46.878	69.576	19.292	0.156	0	150.747	0	1153.709	3.429
	16:26	92.685	29.923	46.947	69.56	19.291	0.156	0	150.512	0	1153.743	3.431
	16:27	92.591	29.923	45.835	69.543	19.291	0.156	0	150.993	0	1153.776	3.535
	16:28	92.497	29.923	46.605	69.526	19.29	0.156	0	150.725	0	1153.81	3.438
	16:29	92.403	29.923	47.014	69.51	19.29	0.156	0	151.118	0	1153.625	3.443
	16:30	92.309	29.922	45.881	69.493	19.29	0.156	0	151.252	0	1153.339	3.629
	16:31	92.215	29.922	46.494	69.476	19.289	0.156	0	150.924	0	1153.19	3.553
	16:32	92.132	29.922	45.779	69.459	19.427	0.156	0	151.473	0	1153.142	3.55
	16:33	92.056	29.922	45.871	69.443	19.337	0.156	0	150.828	0	1153.095	3.546
	16:34	91.98	29.922	45.109	69.426	19.332	0.156	0	151	-0.001	1153.047	3.543
	16:35	91.904	29.921	45.067	69.409	19.327	0.156	0	151.053	-0.001	1153	3.54
	16:36	91.828	29.921	45.82	69.392	19.321	0.156	0	151.571	-0.001	1152.952	3.537
	16:37	91.751	29.921	46.175	69.376	19.316	0.156	0	151.387	-0.001	1152.905	3.533
	AVG	92.45005	29.92332	46.22818	69.50345	19.29027	0.156		151.00941	-0.000181818	1153.3568	3.496636364
		91.56	29.93	47.89	69.40	19.28869			151.2		1152.7	3.52

Test Run #7	Time	Air Temp	Barometer	Humidity	Dew Point	Gas Flow	Micro-motion	Flow Divid	Megawatt	Water Injection	Exh. Temp	Inlet Air D/P
	EDT											
		°F	"HG	%	°F	LBS./SEC	GPM	LBS./SEC	MW	LBS./SEC	°F	"H2O
	16:52	91.509	29.923	48.783	68.5	19.389	0.156	0	152.07	-0.003	1152.065	3.507
	16:53	91.587	29.922	48.445	68.463	19.388	0.156	0	151.733	-0.003	1152.172	3.503
	16:54	91.665	29.922	48.13	68.426	19.377	0.156	0	151.811	-0.003	1152.322	3.499
	16:55	91.742	29.922	46.609	68.389	19.345	0.156	0	151.414	-0.003	1152.503	3.495
	16:56	91.775	29.922	47.946	68.352	19.331	0.156	0	151.243	-0.003	1152.683	3.483
	16:57	91.792	29.922	47.609	68.315	19.317	0.156	0	151.487	-0.003	1152.651	3.442
	16:58	91.81	29.922	46.35	68.31	19.303	0.156	0	151.973	-0.003	1151.652	3.512
	16:59	91.827	29.922	45.689	68.399	19.289	0.156	0	151.575	-0.003	1152.26	3.448
	17:00	91.845	29.922	45.88	68.487	19.275	0.156	0	151.369	-0.003	1152.383	3.521
	17:01	91.863	29.922	45.514	68.576	19.261	0.156	0	151.282	-0.003	1152.505	3.524
	17:02	91.88	29.921	44.809	68.665	19.247	0.156	0	151.295	-0.003	1152.628	3.482
	17:03	91.898	29.921	45.189	68.753	19.269	0.156	0	151.323	-0.003	1152.751	3.549
	17:04	91.916	29.921	44.963	68.842	19.294	0.156	0	151.31	-0.003	1152.874	3.486
	17:05	91.933	29.921	45.428	68.93	19.318	0.156	0	151.329	-0.003	1152.929	3.49
	17:06	91.951	29.921	46.23	69.019	19.338	0.156	0	151.314	-0.003	1152.977	3.494
	17:07	91.968	29.921	45.328	69.108	19.197	0.156	0	151.485	-0.003	1153.026	3.498
	17:08	91.986	29.921	44.707	69.196	19.2	0.156	0	151.533	-0.003	1153.075	3.503
	17:09	92.004	29.921	44.904	69.285	19.203	0.156	0	151.123	-0.003	1153.123	3.507
	17:10	92.054	29.921	45.417	69.373	19.206	0.156	0	150.716	-0.003	1153.172	3.511
	17:11	92.148	29.92	45.585	69.462	19.208	0.156	0	151.135	-0.003	1153.221	3.515
	17:12	92.243	29.92	45.282	69.551	19.211	0.156	0	150.965	-0.003	1153.27	3.52
	AVG	91.876	29.92143	46.13319	68.781	19.2841	0.156		151.40405	-0.003	1152.6782	3.49947619

Test Run #8	Time	Air Temp	Barometer	Humidity	Dew Point	Gas Flow	Micro-motion	Flow Divic	Megawatt	Water Injection	Exh. Temp	Inlet Air D/P
	EDT											
		°F	"HG	%	°F	LBS./SEC	GPM	LBS./SEC	MW	LBS./SEC	°F	"H2O
	17:28	91.814	29.917	45.737	68.548	19.318	0.156	0	151.939	-0.001	1151.978	3.578
	17:29	91.861	29.917	46.321	68.593	19.319	0.156	0	151.615	-0.001	1151.985	3.469
	17:30	91.909	29.916	45.337	68.638	19.324	0.156	0	152.265	-0.001	1151.992	3.486
	17:31	91.956	29.916	45.28	68.683	19.329	0.156	0	151.265	-0.001	1151.999	3.487
	17:32	92.003	29.916	45.317	68.728	19.335	0.156	0	151.793	-0.001	1152.006	3.488
	17:33	92.051	29.916	46.054	68.773	19.34	0.156	0	151.748	-0.001	1152.012	3.49
	17:34	92.098	29.916	45.865	68.818	19.345	0.156	0	151.489	-0.001	1152.019	3.491
	17:35	92.145	29.916	45.428	68.862	19.35	0.156	0	151.67	-0.002	1152.026	3.492
	17:36	92.046	29.915	45.942	68.907	19.355	0.156	0	151.945	-0.002	1152.033	3.493
	17:37	91.748	29.915	46.604	68.952	19.361	0.156	0	151.532	-0.002	1152.918	3.495
	17:38	91.45	29.915	46.923	68.997	19.366	0.156	0	151.778	-0.002	1152.064	3.496
	17:39	91.335	29.915	47.89	69.042	19.371	0.156	0	151.733	-0.002	1152.403	3.497
	17:40	91.471	29.915	46.105	69.087	19.376	0.156	0	151.638	-0.002	1152.537	3.498
	17:41	91.606	29.915	46.54	69.132	19.381	0.156	0	151.659	-0.002	1152.529	3.499
	17:42	91.742	29.915	46.92	69.176	19.381	0.156	0	151.867	-0.002	1152.521	3.501
	17:43	91.877	29.914	46.93	69.221	19.295	0.156	0	151.501	-0.002	1152.513	3.502
	17:44	92.012	29.914	46.849	69.266	19.196	0.156	0	151.42	-0.002	1152.505	3.531
	17:45	92.148	29.914	47.394	69.311	19.292	0.156	0	151.454	-0.002	1152.497	3.524
	17:46	92.283	29.914	46.424	69.356	19.346	0.156	0	151.672	-0.003	1152.489	3.526
	17:47	91.847	29.914	46.765	69.401	19.357	0.156	0	151.553	-0.003	1152.481	3.514
	17:48	91.936	29.914	46.704	69.446	19.296	0.156	0	151.335	-0.003	1152.473	3.478
	AVG	91.87324	29.91519	46.349	68.997	19.3349	0.156		151.66052	-0.001809524	1152.2848	3.501666667

BEST AVAILABLE COPY

Test Run #9	Time	Air Temp	Barometer	Humidity	Dew Point	Gas Flow	Micro-motion	Flow Divid	Megawatt	Water Injection	Exh. Temp	Inlet Air D/P
	EDT											
		°F	"HG	%	°F	LBS./SEC	GPM	LBS./SEC	MW	LBS./SEC	°F	"H2O
	18:02	91.231	29.916	47.326	68.592	19.412	0.156	0	151.792	-0.001	1152.38	3.575
	18:03	91.261	29.916	46.963	68.705	19.259	0.156	0	151.721	-0.001	1152.336	3.57
	18:04	91.29	29.915	46.5	68.836	19.335	0.156	0	151.912	-0.001	1152.293	3.565
	18:05	91.32	29.915	47.072	68.967	19.32	0.156	0	151.825	-0.001	1152.249	3.559
	18:06	91.349	29.915	47.102	69.098	19.24	0.156	0	151.485	-0.001	1152.205	3.553
	18:07	91.379	29.915	47.494	69.229	19.37	0.156	0	151.388	-0.001	1152.161	3.557
	18:08	91.409	29.914	47.105	69.36	19.285	0.156	0	151.728	-0.001	1152.118	3.565
	18:09	91.438	29.914	46.854	69.49	19.346	0.156	0	152.112	-0.001	1152.074	3.572
	18:10	91.468	29.914	47.897	69.621	19.373	0.156	0	151.851	-0.001	1152.03	3.58
	18:11	91.374	29.914	46.633	69.752	19.304	0.156	0	152.454	-0.001	1151.985	3.587
	18:12	91.27	29.914	47.874	69.883	19.276	0.156	0	151.768	-0.001	1151.938	3.595
	18:13	91.165	29.913	48.613	70.014	19.334	0.156	0	151.641	-0.001	1151.891	3.602
	18:14	91.061	29.913	48.095	69.974	19.293	0.156	0	152.208	-0.001	1151.844	3.61
	18:15	90.957	29.913	49.217	69.919	19.319	0.156	0	152.369	-0.001	1151.797	3.617
	18:16	90.853	29.913	49.635	69.864	19.342	0.156	0	151.847	-0.001	1151.75	3.624
	18:17	90.749	29.913	48.624	69.81	19.339	0.156	0	151.563	-0.001	1151.703	3.613
	18:18	90.645	29.912	49.289	69.755	19.336	0.156	0	151.758	-0.001	1151.657	3.59
	18:19	90.541	29.912	50.057	69.701	19.334	0.156	0	152.141	-0.001	1151.61	3.57
	18:20	90.437	29.912	50.332	69.646	19.432	0.156	0	152.598	-0.001	1151.563	3.557
	18:21	90.505	29.912	50.057	69.592	19.326	0.156	0	152.511	-0.001	1151.509	3.544
	18:22	90.808	29.911	48.984	69.537	19.29	0.156	0	152.128	-0.003	1151.449	3.531
	AVG	91.0719	29.91362	48.17729	69.49262	19.3269	0.156		151.94286	-0.001095238	1151.9306	3.577904762
		91.6	29.92	46.81	69.09	19.3[illegible]			151.7		1152.2	3.53

G-2
CT2 – Natural Gas

BEST AVAILABLE COPY

UNIT 2 9/18/07

Test Run #1	Time	Air Temp	Barometer	Humidity	Dew Point	Gas Flow	Micro-mot	Flow Divider	Megawatt	Water Injection	Exh. Temp	Inlet Air D/P
	EDT	2-MAX-CM	2-BAR-P	2-HUMIDIT	2-INLET-D	2-NAT-GA	2-MICROM	2-055-FLW-D	2-DWATT2-	2-WTR-IN-F	2-CT-EXH-M	2-INLET-TOTAL-P
		°F	"HG	%	°F	LBS./SEC	GPM	LBS./SEC	MW	LBS./SEC	°F	"H2O
	13:28	89.605	29.871	47.233	66.006	19.86	-0.122	0	156.35	-0.005	1142.617	3.048
	13:29	89.555	29.871	45.262	65.915	19.861	-0.119	0	157.559	-0.005	1142.438	3.024
	13:30	89.497	29.87	46.297	65.979	19.861	-0.117	0	157.074	-0.005	1142.634	3
	13:31	89.44	29.87	45.414	66.043	19.862	-0.114	0	156.798	-0.005	1142.617	3.009
	13:32	89.383	29.87	45.758	66.108	19.863	-0.112	0	156.253	-0.005	1142.599	3.131
	13:33	89.325	29.87	44.714	66.172	19.864	-0.109	0	156.96	-0.005	1142.214	3.103
	13:34	89.268	29.869	44.391	66.236	19.766	-0.106	0	157.191	-0.005	1142.368	3.074
	13:35	89.211	29.869	46.293	66.301	19.828	-0.104	0	156.626	-0.005	1143.126	3.05
	13:36	89.153	29.869	45.205	66.365	19.83	-0.101	0	157.108	-0.005	1142.591	3.027
	13:37	89.096	29.869	47.019	66.429	19.831	-0.099	0	156.791	-0.005	1142.723	3.037
	13:38	89.038	29.868	45.937	66.494	19.833	-0.096	0	156.321	-0.005	1143.005	3.068
	13:39	88.981	29.868	47.243	66.558	19.785	-0.093	0	156.29	-0.005	1143.385	3.1
	13:40	88.924	29.868	44.649	66.622	19.805	-0.091	0	156.668	-0.005	1142.805	3.102
	13:41	88.866	29.868	45.913	66.687	19.826	-0.088	0	156.573	-0.005	1143.23	3.083
	13:42	88.809	29.867	46.86	66.751	19.846	-0.086	0	157.032	-0.005	1142.664	3.065
	13:43	88.752	29.867	46.35	66.815	19.89	-0.083	0	157.385	-0.005	1142.373	3.047
	13:44	88.733	29.867	47.116	66.88	19.935	-0.08	0	157.158	-0.005	1142.857	3.042
	13:45	89.111	29.867	46.838	66.944	19.896	-0.078	0	157.31	-0.005	1143.276	3.036
	13:46	89.382	29.866	45.62	67.008	19.874	-0.075	0	156.276	-0.005	1143.085	3.031
	13:47	89.577	29.866	45.586	67.073	19.694	-0.072	0	156.472	-0.005	1143.234	3.026
	13:48	89.773	29.866	45.658	67.137	19.739	-0.07	0	156.261	-0.005	1143.384	3.02
	13:49	89.968	29.866	46.864	67.182	19.743	-0.067	0	155.888	-0.005	1144.719	3.015
	AVG	89.24759	29.86827	46.01	66.53205	19.83145	-0.094636	0	156.74291	-0.005	1142.9065	3.051727273

Test Run #2	Time	Air Temp	Barometer	Humidity	Dew Point	Gas Flow	Micro-mot	Flow Divider	Megawatt	Water Injection	Exh. Temp	Inlet Air D/P
	EDT	2-MAX-CM	2-BAR-P	2-HUMIDIT	2-INLET-D	2-NAT-GA	2-MICROM	2-055-FLW-D	2-DWATT2-	2-WTR-IN-F	2-CT-EXH-M	2-INLET-TOTAL-P
		°F	"HG	%	°F	LBS./SEC	GPM	LBS./SEC	MW	LBS./SEC	°F	"H2O
	14:13	89.69	29.86	44.364	66.219	19.784	-0.005	0	156.507	-0.005	1143.147	3.026
	14:14	90.163	29.859	46.428	66.275	19.781	-0.002	0	155.997	-0.005	1143.447	3.052
	14:15	89.964	29.859	43.944	66.332	19.777	0	0	156.415	-0.005	1143.242	3.078
	14:16	89.593	29.859	43.542	66.389	19.882	0	0	157.071	-0.005	1142.052	3.103
	14:17	89.716	29.858	45.29	66.445	19.798	0	0	156.83	-0.005	1142.154	3.079
	14:18	89.838	29.858	46.096	66.502	19.851	0	0	156.351	-0.005	1142.592	3.011
	14:19	89.96	29.858	45.627	66.559	19.798	0	0	156.833	-0.005	1142.368	2.978
	14:20	90.082	29.858	44.976	66.615	19.778	0	0	156.632	-0.005	1142.058	2.981
	14:21	90.204	29.857	45.492	66.672	19.754	0	0	156.492	-0.005	1141.747	2.984
	14:22	90.327	29.857	45.566	66.728	19.811	0	0	156.01	-0.005	1143.383	2.987
	14:23	90.449	29.857	43.74	66.785	19.738	0	0	156.113	-0.005	1143.587	2.99
	14:24	90.502	29.857	44.264	66.842	19.789	0	0	156.112	-0.005	1143.525	2.993
	14:25	90.462	29.856	44.656	66.898	19.81	0	0	155.866	-0.005	1143.463	2.996
	14:26	90.421	29.856	44.109	66.955	19.807	0	0	156.317	-0.005	1143.401	2.999
	14:27	90.38	29.856	44.738	67.012	19.805	0	0	156.78	-0.005	1143.339	3.002
	14:28	90.339	29.856	45.524	67.068	19.802	0	0	156.454	-0.005	1143.297	3.005
	14:29	90.298	29.855	46.203	67.125	19.799	0	0	156.857	-0.006	1142.244	3.008
	14:30	90.14	29.855	46.638	67.181	19.749	0	0	156.338	-0.006	1143.471	3.011
	14:31	89.943	29.855	46.295	66.627	19.788	0	0	155.921	-0.006	1143.2	3.014
	14:32	89.746	29.855	45.394	65.567	19.826	0	0	156.395	-0.006	1142.892	3.08
	14:33	89.673	29.854	44.232	64.713	19.851	0	0	156.917	-0.006	1143.126	3.093
	14:34	89.772	29.854	43.511	64.621	19.838	0	0	156.915	-0.006	1143.361	3.072
	AVG	90.07555	29.85677	45.02859	66.46045	19.80073	-0.000318	0	156.46014	-0.005272727	1142.9589	3.024636364

Test Run #3	Time	Air Temp	Barometer	Humidity	Dew Point	Gas Flow	Micro-mot	Flow Divider	Megawatt	Water Injection	Exh. Temp	Inlet Air D/P
	EDT	2-MAX-CM	2-BAR-P	2-HUMIDIT	2-INLET-D	2-NAT-GA	2-MICROM	2-055-FLW-D	2-DWATT2-	2-WTR-IN-F	2-CT-EXH-M	2-INLET-TOTAL-P
		°F	"HG	%	°F	LBS./SEC	GPM	LBS./SEC	MW	LBS./SEC	°F	"H2O
	14:51	90.401	29.848	44.189	67.021	19.762	0	0	156.124	-0.006	1143.368	3.09
	14:52	90.49	29.848	44.119	67.092	19.772	0	0	156.685	-0.006	1142.89	3.096
	14:53	90.58	29.847	45.774	67.162	19.782	0	0	156.51	-0.006	1143.041	3.103
	14:54	90.669	29.847	46.307	67.232	19.651	0	0	155.949	-0.006	1143.368	3.109
	14:55	90.758	29.847	46.72	67.302	19.7	0	0	156.091	-0.006	1143.392	3.115
	14:56	90.848	29.846	46.049	67.372	19.733	0	0	156.05	-0.006	1143.416	3.122
	14:57	90.937	29.846	46.844	67.442	19.755	0	0	156.081	-0.006	1143.44	3.128
	14:58	91.026	29.846	45.468	67.512	19.762	0	0	155.654	-0.006	1143.464	3.135
	14:59	91.115	29.845	45.648	67.582	19.77	0	0	156.348	-0.006	1143.488	3.128
	15:00	91.205	29.845	45.163	67.652	19.732	0	0	156.001	-0.006	1143.67	3.104
	15:01	91.294	29.845	45.415	67.722	19.683	0	0	155.485	-0.006	1144.108	3.079
	15:02	91.383	29.844	45.005	67.006	19.669	0	0	155.096	-0.006	1144.737	3.076
	15:03	90.596	29.844	43.256	66.209	19.693	0	0	155.742	-0.006	1143.545	3.074
	15:04	90.696	29.843	41.727	66.063	19.711	0	0	155.869	-0.006	1143.61	3.072
	15:05	90.899	29.843	43.221	65.917	19.729	0	0	155.599	-0.006	1143.675	3.07
	15:06	91.101	29.843	43.93	65.77	19.73	0	0	155.902	-0.006	1143.739	3.068
	15:07	91.303	29.842	43.445	65.624	19.72	0	0	155.826	-0.006	1143.804	3.066
	15:08	91.506	29.842	44.348	65.478	19.709	0	0	155.446	-0.006	1144.636	3.064
	15:09	91.478	29.842	42.152	65.332	19.699	0	0	155.773	-0.006	1144.462	3.062
	15:10	91.376	29.841	42.863	65.186	19.688	0	0	155.416	-0.006	1144.324	3.059
	15:11	91.274	29.841	41.562	65.04	19.658	0	0	155.267	-0.006	1144.187	3.057
	15:12	91.171	29.841	41.792	64.978	19.672	0	0	155.927	-0.006	1144.05	3.055
	AVG	91.00482	29.84436	44.31805	66.53155	19.71727	0	0	155.85641	-0.006	1143.7461	3.087818182

90.10932 29.85247 45.11888 66.50817 19.78315 156.35345 -0.005424 1143.203833 3.05472727

Test Run #4	Time	Air Temp	Barometer	Humidity	Dew Point	Gas Flow	Micro-mot	Flow Divider	Megawatt	Water Injection	Exh. Temp	Inlet Air D/P
	EDT	2-MAX-CM	2-BAR-P	2-HUMIDIT	2-INLET-D	2-NAT-GA	2-MICROM	2-055-FLW-D	2-DWATT2-	2-WTR-IN-F	2-CT-EXH-M	2-INLET-TOTAL-P
		°F	"HG	%	°F	LBS./SEC	GPM	LBS./SEC	MW	LBS./SEC	°F	"H2O
	15:28	91.328	29.835	40.33	64.87	19.712	0.035	0	155.475	-0.006	1143.864	3.016
	15:29	91.284	29.835	41.005	64.986	19.715	0.038	0	155.648	-0.006	1143.95	3.02
	15:30	91.216	29.834	39.162	65.103	19.718	0.04	0	155.187	-0.006	1143.931	3.023
	15:31	91.147	29.834	40.749	65.22	19.603	0.043	0	154.857	-0.006	1143.911	3.026
	15:32	91.079	29.833	41.188	65.337	19.657	0.045	0	155.193	-0.006	1143.892	3.03
	15:33	91.01	29.833	41.23	65.454	19.679	0.048	0	155.366	-0.006	1143.873	3.033
	15:34	90.942	29.833	41.186	65.571	19.701	0.051	0	155.469	-0.006	1143.854	3.036
	15:35	90.874	29.833	40.719	65.274	19.723	0.053	0	155.276	-0.006	1143.834	3.04
	15:36	90.805	29.832	40.144	65.311	19.745	0.056	0	155.013	-0.006	1143.815	3.043
	15:37	90.737	29.832	41.703	65.679	19.63	0.059	0	154.957	-0.006	1143.796	3.046
	15:38	90.668	29.832	41.473	65.216	19.716	0.061	0	155.461	-0.006	1143.776	3.05
	15:39	90.6	29.832	41.863	65.072	19.789	0.064	0	155.858	-0.006	1143.714	3.053
	15:40	90.531	29.832	42.292	65.055	19.794	0.066	0	155.988	-0.006	1143.025	3.056
	15:41	90.463	29.832	42.019	65.038	19.713	0.069	0	155.701	-0.006	1142.914	3.06
	15:42	90.394	29.831	41.503	65.021	19.78	0.072	0	155.78	-0.006	1143.11	3.058
	15:43	90.326	29.831	41.468	65.003	19.777	0.074	0	156.125	-0.006	1143.089	3.048
	15:44	90.258	29.831	42.677	64.986	19.822	0.077	0	156.143	-0.006	1143.067	3.038
	15:45	90.189	29.831	42.644	64.969	19.86	0.079	0	156.324	-0.006	1143.046	3.028
	15:46	90.121	29.831	42.602	64.952	19.829	0.082	0	156.463	-0.006	1143.025	3.018
	15:47	90.098	29.83	43.191	64.935	19.741	0.085	0	156.24	-0.006	1143.004	3.008
	15:48	90.139	29.83	43.712	64.918	19.778	0.087	0	156.246	-0.006	1142.983	2.998
	15:49	90.179	29.83	44.384	64.901	19.782	0.09	0	156.174	-0.006	1142.961	2.988
	AVG	90.654	29.83214	41.69291	65.1305	19.73927	0.062455	0	155.67927	-0.006	1143.4743	3.032545455

Test Run #5	Time	Air Temp	Barometer	Humidity	Dew Point	Gas Flow	Micro-mot	Flow Divider	Megawatt	Water Injection	Exh. Temp	Inlet Air D/P
	EDT	2-MAX-CM	2-BAR-P	2-HUMIDIT	2-INLET-D	2-NAT-GA	2-MICROM	2-055-FLW-D	2-DWATT2-	2-WTR-IN-F	2-CT-EXH-M	2-INLET-TOTA
		°F	"HG	%	°F	LBS./SEC	GPM	LBS./SEC	MW	LBS./SEC	°F	"H2O
	16:03	90.749	29.828	42.771	64.663	19.737	0.126	0	155.945	-0.006	1143.719	3.012
	16:04	90.789	29.827	42.429	64.646	19.687	0.129	0	155.447	-0.006	1144.349	3.004
	16:05	90.83	29.827	40.223	63.925	19.574	0.132	0	156.001	-0.006	1144.301	3.001
	16:06	90.871	29.827	38.545	63.335	19.746	0.134	0	156.278	-0.006	1142.852	3.01
	16:07	90.911	29.827	40.032	63.527	19.706	0.137	0	155.665	-0.006	1143.473	3.02
	16:08	91.11	29.827	39.79	63.719	19.666	0.139	0	155.512	-0.006	1144.157	3.029
	16:09	91.323	29.826	39.998	63.911	19.663	0.142	0	155.617	-0.006	1144.12	3.039
	16:10	91.297	29.826	39.384	64.103	19.663	0.145	0	155.391	-0.006	1144.137	3.048
	16:11	91.194	29.826	39.856	64.003	19.663	0.147	0	155.72	-0.006	1144.154	3.057
	16:12	91.09	29.826	40.75	63.807	19.663	0.15	0	154.988	-0.006	1144.171	3.061
	16:13	90.987	29.826	39.076	63.821	19.73	0.153	0	156.13	-0.006	1142.896	3.064
	16:14	90.825	29.826	39.93	64.125	19.652	0.155	0	156.363	-0.006	1143.006	3.066
	16:15	90.581	29.825	40.025	64.428	19.685	0.153	0	156.15	-0.006	1142.929	3.068
	16:16	90.338	29.825	40.198	64.732	19.84	0.147	0	156.454	-0.006	1142.851	3.07
	16:17	90.094	29.825	42.326	65.036	19.737	0.141	0	155.869	-0.006	1142.773	3.072
	16:18	89.851	29.825	45.013	66.05	19.745	0.135	0	156.752	-0.006	1142.695	3.074
	16:19	89.591	29.825	47.115	67.127	19.715	0.129	0	157.148	-0.006	1142.509	3.077
	16:20	89.28	29.824	48.731	67.272	19.858	0.124	0	157.223	-0.006	1142.277	3.079
	16:21	88.97	29.824	50.221	67.335	19.772	0.118	0	156.971	-0.006	1142.126	3.081
	16:22	88.64	29.824	50.825	67.399	19.8	0.112	0	157.627	-0.006	1142.032	3.083
	16:23	88.308	29.824	51.253	67.462	19.926	0.106	0	157.612	-0.006	1141.931	3.085
	16:24	88.092	29.824	52.502	67.526	19.974	0.1	0	157.764	-0.006	1141.829	3.087
	AVG	90.26005	29.82564	43.22695	65.08873	19.73645	0.134273	0	156.30123	-0.006	1143.1494	3.053954545

BEST AVAILABLE COPY

Test Run #6	Time	Air Temp	Barometer	Humidity	Dew Point	Gas Flow	Micro-mot	Flow Divider	Megawatt	Water Injection	Exh. Temp	Inlet Air D/P
	EDT	2-MAX-CM	2-BAR-P	2-HUMIDIT	2-INLET-D	2-NAT-GA	2-MICROM	2-055-FLW-D	2-DWATT2-	2-WTR-IN-F	2-CT-EXH-M	2-INLET-TOTAL-P
		°F	"HG	%	°F	LBS./SEC	GPM	LBS./SEC	MW	LBS./SEC	°F	"H2O
	16:38	87.981	29.821	52.494	68.175	19.984	0.095	0	157.794	-0.006	1140.786	3.081
	16:39	88.024	29.821	52.51	68.226	20.024	0.092	0	157.824	-0.006	1140.791	3.075
	16:40	88.068	29.821	52.331	68.277	20.059	0.089	0	158.043	-0.006	1140.796	3.071
	16:41	88.111	29.821	52.832	68.327	19.926	0.087	0	158.126	-0.006	1140.971	3.067
	16:42	88.155	29.821	52.329	68.378	19.92	0.084	0	158.262	-0.006	1141.138	3.062
	16:43	88.198	29.821	53.171	68.429	19.914	0.082	0	157.887	-0.006	1141.304	3.058
	16:44	88.242	29.821	52.571	68.48	19.908	0.079	0	157.978	-0.006	1141.47	3.054
	16:45	88.285	29.821	51.856	68.531	19.902	0.076	0	157.93	-0.006	1141.637	3.049
	16:46	88.329	29.82	50.848	68.582	19.896	0.074	0	157.275	-0.006	1141.803	3.045
	16:47	88.411	29.82	50.476	68.491	19.89	0.071	0	157.234	-0.006	1142.239	3.041
	16:48	88.519	29.82	49.034	68.203	19.862	0.069	0	157.3	-0.006	1142.506	3.037
	16:49	88.628	29.82	49.06	67.916	19.827	0.066	0	156.815	-0.005	1142.463	3.032
	16:50	88.737	29.82	49.406	67.629	19.793	0.063	0	156.798	-0.005	1142.42	3.028
	16:51	88.845	29.82	49.024	67.401	19.877	0.061	0	157.194	-0.005	1142.377	3.024
	16:52	88.928	29.82	48.358	67.256	19.778	0.058	0	157.189	-0.005	1142.118	3.043
	16:53	88.932	29.819	48.508	67.111	19.836	0.055	0	157.138	-0.005	1141.839	3.123
	16:54	88.936	29.819	49.278	66.966	19.825	0.053	0	157.3	-0.005	1141.934	3.116
	16:55	88.941	29.819	47.507	66.821	19.814	0.05	0	157.132	-0.005	1142.061	3.11
	16:56	88.945	29.819	48.143	66.676	19.802	0.048	0	156.795	-0.005	1142.188	3.103
	16:57	88.949	29.819	48.067	66.531	19.814	0.045	0	156.624	-0.005	1142.589	3.021
	16:58	88.953	29.819	48.529	66.386	19.811	0.042	0	156.235	-0.005	1142.888	3.03
	16:59	88.957	29.819	47.39	66.241	19.808	0.04	0	156.787	-0.005	1142.776	3.037
	AVG	88.54882	29.82005	50.16918	67.68332	19.87591	0.067227	0	157.34818	-0.0055	1141.8679	3.059409091

88.821 29.83 45.04 65.77 19.784 15.7383 15.6/2 1142.8

Test Run #7	Time	Air Temp	Barometer	Humidity	Dew Point	Gas Flow	Micro-mot	Flow Divider	Megawatt	Water Injection	Exh. Temp	Inlet Air D/P
	EDT	2-MAX-CM	2-BAR-P	2-HUMIDI	2-INLET-D	2-NAT-GA	2-MICROM	2-055-FLW-D	2-DWATT2-	2-WTR-IN-F	2-CT-EXH-M	2-INLET-TOTAL-P
		°F	"HG	%	°F	LBS./SEC	GPM	LBS./SEC	MW	LBS./SEC	°F	"H2O
	17:14	89.719	29.824	44.752	65.791	19.876	0.001	0	156.857	-0.006	1141.958	3.019
	17:15	89.755	29.824	44.854	65.696	19.785	0	0	156.77	-0.006	1141.956	3.024
	17:16	89.79	29.824	44.949	65.601	19.82	0	0	156.622	-0.006	1141.954	3.028
	17:17	89.826	29.824	46.206	65.505	19.814	0	0	156.699	-0.006	1141.952	3.033
	17:18	89.862	29.824	43.835	65.41	19.807	0	0	156.607	-0.006	1141.95	3.037
	17:19	89.897	29.824	44.682	65.315	19.801	0	0	156.908	-0.006	1141.948	3.042
	17:20	89.933	29.824	44.548	65.219	19.729	0	0	157.205	-0.006	1141.946	3.047
	17:21	89.691	29.824	45.272	65.124	19.784	0	0	157.159	-0.006	1141.944	3.041
	17:22	88.958	29.825	43.256	65.111	19.867	0	0	157.386	-0.006	1141.945	3.043
	17:23	89.049	29.825	43.851	65.104	19.793	0	0	157.232	-0.006	1141.978	3.044
	17:24	89.139	29.825	44.433	65.098	19.897	0	0	157.466	-0.006	1142.01	3.045
	17:25	89.229	29.825	44.408	65.092	19.833	0	0	156.899	-0.006	1142.043	3.047
	17:26	89.32	29.825	43.913	65.086	19.747	0	0	157.321	-0.006	1142.076	3.048
	17:27	89.41	29.825	44.547	65.079	19.741	0	0	156.85	-0.006	1142.108	3.05
	17:28	89.501	29.825	44.652	65.073	19.846	0	0	156.592	-0.006	1142.141	3.051
	17:29	89.491	29.825	44.591	65.067	19.77	0	0	156.858	-0.006	1141.891	3.052
	17:30	89.473	29.825	45.787	65.061	19.757	0	0	156.516	-0.006	1142.854	3.054
	17:31	89.454	29.825	45.212	65.055	19.775	0	0	156.651	-0.006	1142.776	3.055
	17:32	89.436	29.825	45.333	65.048	19.725	0	0	156.832	-0.006	1142.779	3.056
	17:33	89.417	29.825	44.166	65.042	19.741	0	0	157.065	-0.006	1142.781	3.058
	17:34	89.399	29.825	45.256	65.036	19.796	0	0	157.181	-0.006	1142.16	3.059
	17:35	89.381	29.825	46.344	65.03	19.846	0	0	156.816	-0.006	1141.57	3.06
	AVG	89.50591	29.82464	44.76577	65.21105	19.79773	4.55E-05	0	156.93145	-0.006	1142.1236	3.045136364

Test Run #8	Time	Air Temp	Barometer	Humidity	Dew Point	Gas Flow	Micro-mot	Flow Divider	Megawatt	Water Injection	Exh. Temp	Inlet Air D/P
	EDT	2-MAX-CM	2-BAR-P	2-HUMIDIT	2-INLET-D	2-NAT-GA	2-MICROM	2-055-FLW-D	2-DWATT2-	2-WTR-IN-F	2-CT-EXH-M	2-INLET-TOTAL-P
		°F	"HG	%	°F	LBS./SEC	GPM	LBS./SEC	MW	LBS./SEC	°F	"H2O
	17:52	88.813	29.822	44.091	64.933	19.854	0	0	157.293	-0.005	1141.565	3.081
	17:53	88.784	29.822	44.894	64.927	19.925	0	0	157.103	-0.005	1141.531	3.082
	17:54	88.755	29.822	45.018	64.921	19.87	0	0	157.402	-0.005	1141.496	3.083
	17:55	88.726	29.822	46.015	64.915	19.834	0	0	157.525	-0.005	1141.482	3.084
	17:56	88.704	29.822	45.509	64.909	19.828	0	0	157.661	-0.005	1141.53	3.085
	17:57	88.684	29.821	44.33	64.903	19.895	0	0	157.343	-0.005	1141.578	3.085
	17:58	88.664	29.821	45.845	64.898	19.862	0	0	157.441	-0.005	1141.626	3.086
	17:59	88.644	29.821	45.521	64.892	19.863	0	0	157.063	-0.005	1142.226	3.087
	18:00	88.624	29.821	44.898	64.886	19.864	0	0	156.869	-0.005	1141.668	3.088
	18:01	88.604	29.821	44.709	64.88	19.798	0	0	157.658	-0.005	1141.874	3.088
	18:02	88.584	29.821	43.996	64.874	19.875	0	0	157.656	-0.005	1141.3	3.089
	18:03	88.564	29.82	44.883	64.868	19.889	0	0	157.589	-0.005	1141.19	3.09
	18:04	88.543	29.82	45.405	64.862	19.903	0	0	157.38	-0.005	1141.121	3.091
	18:05	88.523	29.82	45.475	64.856	19.79	0	0	157.497	-0.005	1141.052	3.091
	18:06	88.503	29.82	44.496	64.85	19.929	0	0	157	-0.005	1140.984	3.092
	18:07	88.483	29.82	45.523	64.844	19.956	0	0	157.371	-0.005	1140.915	3.093
	18:08	88.463	29.82	45.764	64.838	19.887	0	0	157.348	-0.005	1141.649	3.094
	18:09	88.443	29.82	44.22	64.832	19.791	0	0	157.698	-0.005	1142.009	3.094
	18:10	88.423	29.819	44.669	64.826	19.789	0	0	157.131	-0.005	1142.009	3.095
	18:11	88.403	29.819	44.883	64.82	19.729	0	0	157.567	-0.005	1141.097	3.096
	18:12	88.383	29.819	45.001	64.815	19.843	0	0	157.581	-0.005	1140.832	3.097
	18:13	88.363	29.819	44.487	64.809	19.887	0	0	157.759	-0.005	1140.867	3.098
	AVG	88.57636	29.82055	44.98327	64.87082	19.85732	0	0	157.40614	-0.005	1141.4364	3.0895

Test Run #9	Time	Air Temp	Barometer	Humidity	Dew Point	Gas Flow	Micro-mot	Flow Divider	Megawatt	Water Injection	Exh. Temp	Inlet Air D/P
	EDT	2-MAX-CM	2-BAR-P	2-HUMIDIT	2-INLET-D	2-NAT-GA	2-MICROM	2-055-FLW-D	2-DWATT2-	2-WTR-IN-F	2-CT-EXH-M	2-INLET-TOTAL-P
		°F	"HG	%	°F	LBS./SEC	GPM	LBS./SEC	MW	LBS./SEC	°F	"H2O
	18:28	89.322	29.815	45.015	65.032	19.928	-0.062	0	157.422	-0.005	1141.42	3.091
	18:29	89.341	29.815	45.508	65.069	19.827	-0.067	0	157.57	-0.005	1141.476	3.091
	18:30	89.359	29.814	45.821	65.071	19.866	-0.071	0	157.781	-0.005	1141.517	3.09
	18:31	89.378	29.814	45.039	65.072	19.862	-0.076	0	157.509	-0.005	1141.558	3.09
	18:32	89.356	29.814	45.284	65.074	19.857	-0.08	0	157.409	-0.005	1141.599	3.089
	18:33	89.307	29.814	45.238	65.075	19.853	-0.084	0	157.555	-0.005	1141.641	3.089
	18:34	89.258	29.814	46.843	65.077	19.936	-0.089	0	157.668	-0.005	1141.682	3.088
	18:35	88.994	29.814	46.599	65.078	19.881	-0.093	0	157.582	-0.005	1141.723	3.087
	18:36	88.829	29.814	46.866	65.08	19.909	-0.098	0	157.995	-0.005	1141.631	3.087
	18:37	88.299	29.814	47.006	65.081	19.964	-0.102	0	158.036	-0.004	1140.909	3.086
	18:38	88.261	29.814	47.072	65.083	19.809	-0.107	0	158.151	-0.004	1140.878	3.086
	18:39	88.223	29.815	47.086	65.084	19.828	-0.111	0	157.939	-0.004	1140.911	3.085
	18:40	88.185	29.815	46.615	65.086	19.883	-0.116	0	158.093	-0.004	1140.861	3.085
	18:41	88.892	29.815	47.178	65.087	19.858	-0.12	0	158.056	-0.004	1140.811	3.084
	18:42	87.842	29.815	47.072	65.088	19.884	-0.125	0	157.969	-0.004	1140.762	3.084
	18:43	88.521	29.815	47.322	65.09	19.909	-0.129	0	157.85	-0.004	1140.712	3.083
	18:44	88.75	29.815	46.363	65.091	19.899	-0.134	0	158.035	-0.004	1140.662	3.083
	18:45	88.688	29.815	47.254	65.093	19.886	-0.138	0	157.887	-0.004	1140.612	3.082
	18:46	88.626	29.815	47.347	65.094	19.873	-0.142	0	157.656	-0.004	1140.572	3.082
	18:47	88.564	29.815	47.115	65.096	19.959	-0.147	0	158.08	-0.004	1140.547	3.081
	18:48	88.502	29.816	46.524	65.097	19.923	-0.151	0	158.232	-0.004	1140.521	3.081
	18:49	88.44	29.816	46.012	65.099	19.836	-0.156	0	157.924	-0.004	1140.495	3.08
	AVG	88.76986	29.81468	46.46268	65.08168	19.88318	-0.109	0	157.83632	-0.004409091	1141.0682	3.085636364
		88.95	29.82	45.40	65.05	19.8461			157.4		1141.5	3.07

G-3
CT2 – Fuel Oil

BEST AVAILABLE COPY

U2-FO-1

Unit #2 Stack

	Time	Air Temp	Barometer	Humidity	Dew Point	Gas Flow	Micro-motion	Flow Divider	Megawatt	Water Injection	Exh. Temp	Inlet Air D/P
		°F	"Hg		°F		gal/min	N/A	MW	lbs/sec	°F	"H_2O
		2-MAX-CM	2-BAR-P	2-HUMIDI	2-INLET-DE	2-NAT-GAS	2-MICROMOTI	2-055-FLW-DV	2-DWATT2	2-WTR-IN-F	2-CT-EXH-MED-AVG-T	2-INLET-TOTAL-P
[illegible]	13:30	86.332	29.743	70.860	74.655	0.000	215.077	90.789	166.131	30.322	1136.286	2.759
[illegible]	13:40	83.051	29.742	70.358	72.947	0.000	216.620	91.025	167.932	31.265	1131.272	2.700
[illegible]	13:50	83.568	29.741	68.768	73.186	0.000	216.834	90.728	168.058	30.901	1131.351	2.766
	14:00	82.620	29.738	74.981	73.489	0.000	216.007	90.391	167.345	30.515	1131.299	2.712
[illegible]	14:10	82.926	29.734	76.928	73.793	0.000	216.166	90.264	168.146	30.634	1131.109	2.767
[illegible]	14:20	83.276	29.731	71.472	74.097	0.000	215.973	89.251	167.275	31.039	1131.802	2.760
[illegible]	14:30	84.173	29.727	70.086	72.931	0.000	215.780	89.983	166.849	31.003	1133.312	2.775
	14:40	84.133	29.724	71.852	73.806	0.000	215.586	89.623	167.001	30.526	1132.383	2.789
[illegible]	14:50	85.291	29.720	72.015	73.051	0.000	215.393	89.945	167.284	30.580	1133.620	2.804
[illegible]	15:00	86.173	29.718	64.211	73.465	0.000	215.550	89.955	166.348	30.910	1135.197	2.818
[illegible]												
Manually fill time												
blocks after												
compiling data.												
Averages =		84.15	29.73	71.15	73.54	—	215.899	NA	167.24	30.770	1132.76	2.765

BEST AVAILABLE COPY

U2-FO-2

Unit #2 Stack

	Time	Air Temp	Barometer	Humidity	Dew Point	Gas Flow	Micro-motion	Flow Divider	Megawatt	Water Injection	Exh. Temp	Inlet Air D/P
		2-MAX-CM	2-BAR-P	2-HUMIDI	2-INLET-DE	2-NAT-GAS	2-MICROMOTI	2-055-FLW-DV	2-DWATT2-	2-WTR-IN-F	2-CT-EXH-MED-AVG-T	2-INLET-TOTAL-P
Start Date and Time	15:10	86.482	29.716	61.241	73.878	0.000	216.004	90.617	167.463	31.268	1133.243	2.832
[illegible]	15:20	86.148	29.714	67.244	74.146	0.000	216.297	89.679	168.081	30.958	1132.136	2.737
[illegible]	15:30	86.395	29.712	68.458	73.103	0.000	216.140	89.814	167.099	30.647	1132.073	2.783
	15:40	86.753	29.709	61.696	72.064	0.000	215.983	90.683	167.807	31.345	1133.253	2.822
End Date and Time	15:50	86.641	29.707	59.835	71.700	0.000	215.826	89.631	168.095	31.688	1133.208	2.801
[illegible]	16:00	86.529	29.707	62.799	72.686	0.000	215.669	89.444	167.086	30.956	1133.370	2.876
[illegible]	16:10	86.418	29.707	59.858	71.535	0.000	215.762	89.038	166.226	31.037	1134.681	2.857
	16:20	86.305	29.706	60.846	71.299	0.000	215.953	89.266	166.827	30.893	1134.800	2.820
[illegible]	16:30	85.943	29.706	60.297	71.063	0.000	216.145	89.905	166.807	31.476	1134.175	2.853
[illegible]	16:40	85.493	29.706	62.249	70.826	0.000	216.336	91.773	167.799	31.241	1133.399	2.881
[illegible]												
Manually fill time blocks after compiling data:												
Averages		86.21	29.71	60.45	72.23	—	216.012	NA	167.33	31.151	1133.43	2.826

BEST AVAILABLE COPY

U2-FO-3

Unit #2 Stack

	Time	Air Temp	Barometer	Humidity	Dew Point	Gas Flow	Micro-motion	Flow Divider	Megawatt	Water Injection	Exh. Temp	Inlet Air D/P
		2-MAX-CM	2-BAR-P	2-HUMIDIT	2-INLET-DE	2-NAT-GAS	2-MICROMOTI	2-055-FLW-DV	2-DWATT2	2-WTR-IN-F	2-CT-EXH-MED-AVG-T	2-INLET-TOTAL-P
	16:50	85.142	29.705	63.934	70.590	0.000	216.088	90.065	168.231	31.006	1133.231	2.905
	17:00	84.726	29.706	62.346	70.442	0.000	215.586	89.408	167.490	31.529	1134.155	2.914
	17:10	84.482	29.707	60.800	70.446	0.000	215.228	89.469	166.654	31.317	1134.945	2.924
	17:20	84.238	29.708	60.161	70.450	0.000	214.914	88.850	166.809	31.057	1134.869	2.933
	17:30	84.230	29.709	62.710	70.454	0.000	214.600	89.409	166.792	31.485	1134.792	2.942
	17:40	84.351	29.710	61.873	70.458	0.000	214.664	90.106	166.327	31.274	1134.715	2.952
	17:50	84.472	29.711	60.077	70.462	0.000	214.834	89.069	167.469	31.299	1134.932	2.964
	18:00	85.345	29.712	61.336	70.646	0.000	215.003	89.482	166.421	30.779	1135.292	2.987
	18:10	84.991	29.714	64.999	71.121	0.000	215.719	89.847	167.848	31.240	1133.072	3.009
Manually fill time blocks after compiling data.												
Averages		84.66	29.71	62.05	70.56	—	215.132	NA	167.12	31.221	1134.44	2.9848

APPENDIX H
CALIBRATION DATA

1. Calibration Gas Certificates
2. Reference Method Analyzer Checks

H-1
Calibration Gas Certificates

Spectra Gases, Inc.

3434 Route 22 West, Branchburg, New Jersey 08876 USA

ISO 9001:2000

Shipped from: 80 Industrial Drive, Alpha, NJ 08865

CERTIFICATE OF ANALYSIS

EPA PROTOCOL MIXTURE

PROCEDURE # : G1

CUSTOMER: TRC Cubix
SGI ORDER # : 101686
ITEM# : 5
P.O.# : G47523,T13

CYLINDER # : CC-250079
CYLINDER PRES: 2000 PSIG
CGA OUTLET: 660

CERTIFICATION DATE: 1/3/2007
EXPIRATION DATE: 1/3/2009

CERTIFICATION HISTORY

COMPONENT	DATE OF ASSAY	MEAN CONCENTRATION	CERTIFIED CONCENTRATION	ANALYTICAL ACCURACY
Nitric Oxide	12/27/2006 1/3/2007	8.831 ppm 8.824 ppm	8.83 ppm	+/- 1%
NOx			8.83 ppm	Reference Value Only

BALANCE Nitrogen

PREVIOUS CERTIFICATION DATES: None

REFERENCE STANDARDS

COMPONENT	SRM/NTRM#	CYLINDER#	CONCENTRATION
Nitric Oxide	NTRM-82629	CC-134568	19.68 ppm

INSTRUMENTATION

COMPONENT	MAKE/MODEL	SERIAL #	DETECTOR	CALIBRATION DATE(S)
Nitric Oxide	Thermo 42C	42C-64942-345	Chemi	12/18/2006

THIS STANDARD IS NIST TRACEABLEIT WAS CERTIFIED ACCORDING TO THE EPA PROTOCOL PROCEDURES.
DO NOT USE THIS STANDARD IF THE CYLINDER PRESSURE IS LESS THAN 150 PSIG.

ANALYST: FRED PIKULA

DATE: 1/3/2007

Tel: +1 908-252-9300 Fax: +1 908-252-0811
www.spectragases.com

Spectra Gases, Inc.

3434 Route 22 West, Branchburg, New Jersey 08876 USA

ISO 9001:2000

Shipped from: 80 Industrial Drive, Alpha, NJ 08865

CERTIFICATE OF ANALYSIS

EPA PROTOCOL MIXTURE

PROCEDURE # : G1

CUSTOMER: TRC Environmental Corp
SGI ORDER # : 108735
ITEM# : 3
P.O.# : G48042

CYLINDER # : CC-85059
CYLINDER PRES: 2000 PSIG
CGA OUTLET: 660

CERTIFICATION DATE: 5/18/2007
EXPIRATION DATE: 5/18/2009

CERTIFICATION HISTORY

COMPONENT	DATE OF ASSAY	MEAN CONCENTRATION	CERTIFIED CONCENTRATION	ANALYTICAL ACCURACY
Nitric Oxide	5/11/2007 5/18/2007	15.06 ppm 15.06 ppm	15.06 ppm	+/- 1%
NOx			15.06 ppm	Reference Value Only

BALANCE Nitrogen

PREVIOUS CERTIFICATION DATES: None

REFERENCE STANDARDS

COMPONENT	SRM/NTRM#	CYLINDER#	CONCENTRATION
Nitric Oxide	NTRM-82629	CC-134570	19.68 ppm

INSTRUMENTATION

COMPONENT	MAKE/MODEL	SERIAL #	DETECTOR	CALIBRATION DATE(S)
Nitric Oxide	Thermo 42C	42C-64942-345	Chemi	5/14/2007

THIS STANDARD IS NIST TRACEABLE. IT WAS CERTIFIED ACCORDING TO THE EPA PROTOCOL PROCEDURES.
DO NOT USE THIS STANDARD IF THE CYLINDER PRESSURE IS LESS THAN 150 PSIG.

ANALYST: FRED PIKULA

DATE: 5/18/2007

Tel: +1 908-252-9300 Fax: +1 908-252-0811
www.spectragases.com

Spectra Gases, Inc.

3434 Route 22 West, Branchburg, New Jersey 08876 USA

ISO 9001:2000

Shipped from: 80 Industrial Drive, Alpha, NJ 08865

CERTIFICATE OF ANALYSIS

EPA PROTOCOL MIXTURE

PROCEDURE # : G1

CUSTOMER: TRC Cubix
SGI ORDER # : 104875
ITEM# : 2
P.O.# : G47531

CYLINDER # : CC-131120
CYLINDER PRES: 2000 PSIG
CGA OUTLET: 660

CERTIFICATION DATE: 3/6/2007
EXPIRATION DATE: 3/6/2009

CERTIFICATION HISTORY

COMPONENT	DATE OF ASSAY	MEAN CONCENTRATION	CERTIFIED CONCENTRATION	ANALYTICAL ACCURACY
Nitric Oxide	2/27/2007 3/6/2007	44.85 ppm 44.71 ppm	44.8 ppm	+/- 1%
NOx			44.8 ppm	Reference Value Only

BALANCE Nitrogen

PREVIOUS CERTIFICATION DATES: None

REFERENCE STANDARDS

COMPONENT	SRM/NTRM#	CYLINDER#	CONCENTRATION
Nitric Oxide	NTRM-81684	CC-202731	98.8 ppm

INSTRUMENTATION

COMPONENT	MAKE/MODEL	SERIAL #	DETECTOR	CALIBRATION DATE(S)
Nitric Oxide	CAI-400-CLD	6L09004	Chemi	2/9/2007

THIS STANDARD IS NIST TRACEABLEIT WAS CERTIFIED ACCORDING TO THE EPA PROTOCOL PROCEDURES.
DO NOT USE THIS STANDARD IF THE CYLINDER PRESSURE IS LESS THAN 150 PSIG.

ANALYST: _____ DATE: 3/6/2007
FRED PIKULA

Tel: +1 908-252-9300 Fax: +1 908-252-0811
www.spectragases.com

RAIA CLIADO

Scott Specialty Gases

Dual-Analyzed Calibration Standard

6141 EASTON ROAD, BLDG 1,PLUMSTEADVILLE,PA 18949-0310 Phone: 800-331-4953 Fax: 215-766-7226

CERTIFICATE OF ACCURACY: EPA Protocol Gas

Assay Laboratory

SCOTT SPECIALTY GASES
6141 EASTON ROAD, BLDG 1
PLUMSTEADVILLE,PA 18949-0310

P.O. No.: 10243
Project No.: 01-51513-004

Customer

SOUTHERN COMPANY SERVICES

3800 ROAN STREET, NE
ARCADIA FL 34266

ANALYTICAL INFORMATION

This certification was performed according to EPA Traceability Protocol For Assay & Certification of Gaseous Calibration Standards; Procedure G-1; September, 1997.

Cylinder Number: ALM063462 **Certification Date:** 04Apr2006 **Exp. Date:** 03Apr2008
Cylinder Pressure*:** 2010 PSIG **Batch No:** 0147670

COMPONENT	CERTIFIED CONCENTRATION (Moles)		ANALYTICAL ACCURACY**	TRACEABILITY
NITRIC OXIDE	109.5	PPM	+/- 1%	Direct NIST and NMi
NITROGEN - OXYGEN FREE		BALANCE		
TOTAL OXIDES OF NITROGEN	109.8	PPM		Reference Value Only

*** Do not use when cylinder pressure is below 150 psig.
** Analytical accuracy is based on the requirements of EPA Protocol Procedure G1, September 1997.

REFERENCE STANDARD

TYPE/SRM NO.	EXPIRATION DATE	CYLINDER NUMBER	CONCENTRATION	COMPONENT
NTRM 1684	01Jun2009	AAL070931	98.40 PPM	NITRIC OXIDE

INSTRUMENTATION

INSTRUMENT/MODEL/SERIAL#	DATE LAST CALIBRATED	ANALYTICAL PRINCIPLE
FTIR//000928781	23Mar2006	FTIR

ANALYZER READINGS

(Z=Zero Gas R=Reference Gas T=Test Gas r=Correlation Coefficient)

First Triad Analysis

NITRIC OXIDE

Date: 26Mar2006 Response Unit:PPM

Z1=-0.12682	R1=98.88159	T1=110.4109
R2=98.91291	Z2=0.02409	T2=110.4204
Z3=0.35591	T3=110.4573	R3=99.13619

Avg. Concentration: 109.8 PPM

Second Triad Analysis

Date: 04Apr2006 Response Unit: PPM

Z1=-0.10526	R1=98.46242	T1=109.4044
R2=98.62721	Z2=-0.05493	T2=109.4229
Z3=-0.01018	T3=109.5764	R3=98.69844

Avg. Concentration: 109.2 PPM

Calibration Curve

Concentration=A+Bx+Cx2+Dx3+Ex4
r=9.999992E-1

Constants:	A=0.00000E+0
B=9.17487E-1	C=1.49000E-4
D=0.00000E+0	E=0.00000E+0

APPROVED BY: Michael A. Kuhns

Michael A. Kuhns

Spectra Gases, Inc.

3434 Route 22 West, Branchburg, New Jersey 08876 USA

ISO 9001:2000

Shipped from: 80 Industrial Drive, Alpha, NJ 08865

RECERTIFICATION OF ANALYSIS

EPA PROTOCOL MIXTURE

PROCEDURE # : G1

CUSTOMER:	TRC Cubix	CYLINDER # :	CC-133604
SGI ORDER # :	100922	CYLINDER PRES:	1700 PSIG
ITEM# :	2	CGA OUTLET:	660
P.O.# :	G47523,T13		

CERTIFICATION DATE: 12/19/2006
EXPIRATION DATE: 12/19/2008

CERTIFICATION HISTORY

COMPONENT	DATE OF ASSAY	MEAN CONCENTRATION	CERTIFIED CONCENTRATION	ANALYTICAL ACCURACY
Nitrogen Dioxide	4/5/2006 12/19/2006	50.50 ppm 50.28 ppm	50.4 ppm	+/- 3%

BALANCE Nitrogen

PREVIOUS CERTIFICATION DATES: 4/5/2006 by Spectra Gases

REFERENCE STANDARDS

COMPONENT	SRM/NTRM#	CYLINDER#	CONCENTRATION
Nitrogen Dioxide	GMIS-1	CC-143370	100.5 ppm

INSTRUMENTATION

COMPONENT	MAKE/MODEL	SERIAL #	DETECTOR	CALIBRATION DATE(S)
Nitrogen Dioxide	Thermo 42i-HL	621417605	Chemi	12/19/2006

THIS STANDARD IS NIST TRACEABLE. IT WAS CERTIFIED ACCORDING TO THE EPA PROTOCOL PROCEDURES.
DO NOT USE THIS STANDARD IF THE CYLINDER PRESSURE IS LESS THAN 150 PSIG.

ANALYST: _____ DATE: 12/19/2006

FRED PIKULA

Tel: +1 908-252-9300 Fax: +1 908-252-0811
www.spectragases.com

Spectra Gases, Inc.

3434 Route 22 West, Branchburg, New Jersey 08876 USA

ISO 9001:2000

Shipped from: 80 Industrial Drive, Alpha, NJ 08865

CERTIFICATE OF ANALYSIS

EPA PROTOCOL MIXTURE

PROCEDURE # : G1

CUSTOMER:	Cubix Corporation	CYLINDER # :	CC-110234
SGI ORDER # :	0081089	CYLINDER PRES:	2000 PSIG
ITEM# :	5	CGA OUTLET:	590
P.O.# :	2005913, T13 ROGE		

CERTIFICATION DATE: 11/21/2005
EXPIRATION DATE: 11/21/2008

CERTIFICATION HISTORY

COMPONENT	DATE OF ASSAY	MEAN CONCENTRATION	CERTIFIED CONCENTRATION	ANALYTICAL ACCURACY
Carbon Dioxide	11/21/2005	8.54 %	8.54 %	+/- 1%
Oxygen	11/21/2005	12.97 %	12.97 %	+/- 1%

BALANCE Nitrogen

PREVIOUS CERTIFICATION DATES: None

REFERENCE STANDARDS

COMPONENT	SRM/NTRM#	CYLINDER#	CONCENTRATION
Carbon Dioxide	NTRM-82745x	CC-79947	20.0 %
Oxygen	NTRM-82659x	CC-83894	22.8 %

INSTRUMENTATION

COMPONENT	MAKE/MODEL	SERIAL #	DETECTOR	CALIBRATION DATE(S)
Carbon Dioxide	CAI-300	S03001	NDIR	10/21/2005
Oxygen	CAI-300	S03001	PM	10/21/2005

THIS STANDARD IS NIST TRACEABLE. IT WAS CERTIFIED ACCORDING TO THE EPA PROTOCOL PROCEDURES.
DO NOT USE THIS STANDARD IF THE CYLINDER PRESSURE IS LESS THAN 150 PSIG.

ANALYST: CP
CHERYL PATINO

DATE: 11/21/2005

Tel: +1 908-252-9300 Fax: +1 908-252-0811
www.spectragases.com

Spectra Gases, Inc.

3434 Route 22 West, Branchburg, New Jersey 08876 USA

ISO 9001:2000

Shipped from: 80 Industrial Drive, Alpha, NJ 08865

CERTIFICATE OF ANALYSIS

EPA PROTOCOL MIXTURE

PROCEDURE # : G1

CUSTOMER:	TRC Cubix	CYLINDER # :	CC-173283
SGI ORDER # :	108018	CYLINDER PRES:	2000 PSIG
ITEM# :	1	CGA OUTLET:	590
P.O.# :	G48034	PRODUCT CODE:	TRC 22

CERTIFICATION DATE: 5/2/2007
EXPIRATION DATE: 5/2/2010

CERTIFICATION HISTORY

COMPONENT	DATE OF ASSAY	MEAN CONCENTRATION	CERTIFIED CONCENTRATION	ANALYTICAL ACCURACY
Carbon Dioxide	5/2/2007	4.53 %	4.53 %	+/- 1%
Oxygen	5/2/2007	22.1 %	22.1 %	+/- 1%

BALANCE Nitrogen

PREVIOUS CERTIFICATION DATES: None

REFERENCE STANDARDS

COMPONENT	SRM/NTRM#	CYLINDER#	CONCENTRATION
Carbon Dioxide	GMIS-1	CC-85169	5.02 %
Oxygen	NTRM-82659x	CC-83906	22.8 %

INSTRUMENTATION

COMPONENT	MAKE/MODEL	SERIAL #	DETECTOR	CALIBRATION DATE(S)
Carbon Dioxide	CAI-300	S03001	NDIR	5/2/2007
Oxygen	CAI-300	S03001	PM	4/16/2007

THIS STANDARD IS NIST TRACEABLE. IT WAS CERTIFIED ACCORDING TO THE EPA PROTOCOL PROCEDURES.
DO NOT USE THIS STANDARD IF THE CYLINDER PRESSURE IS LESS THAN 150 PSIG.

ANALYST: CP
CHERYL PATINO

DATE: 5/2/2007

Tel: +1 908-252-9300 Fax: +1 908-252-0811
www.spectragases.com

BEST AVAILABLE COPY

SPECTRA GASES INC.
3434 Route 22 West • Branchburg, NJ 08876 USA Tel.: (908) 252-9300 • (800) 932-0624 • Fax: (908) 252-0811
Shipped From: 60 Industrial Drive • Alpha, NJ 08865

RECERTIFICATION OF ANALYSIS

EPA PROTOCOL MIXTURE

PROCEDURE # : G1

CUSTOMER: Cubix Corporation
SGI ORDER # : 0048461
ITEM# : 1
P.O.# : 2004007, T-13 JIM

CYLINDER # : CC-91091
CYLINDER PRES: 2000 PSIG
CGA OUTLET: 590

CERTIFICATION DATE: 8/17/2004
EXPIRATION DATE: 8/17/2007

CERTIFICATION HISTORY

COMPONENT	DATE OF ASSAY	MEAN CONCENTRATION	CERTIFIED CONCENTRATION	ANALYTICAL ACCURACY
Carbon Monoxide	2/10/2004 8/17/2004	6.179 ppm 6.171 ppm	6.18 ppm	+/- 1%
Methane	2/3/2004 8/17/2004	5.03 ppm 5.09 ppm	5.06 ppm	+/- 1%

BALANCE Air

PREVIOUS CERTIFICATION DATES: 2/10/2004 by Spectra Gases

REFERENCE STANDARDS

COMPONENT	SRM/NTRM#	CYLINDER#	CONCENTRATION
Carbon Monoxide	NTRM-82635x	CC-135190	19.53 ppm
Methane	GMIS-1	CC-60207	10.06 ppm

INSTRUMENTATION

COMPONENT	MAKE/MODEL	SERIAL #	DETECTOR	CALIBRATION DATE(S)
Carbon Monoxide	Thermo 48C	48CTL-69941-364	GFC-IR	8/17/2004
Methane	H Packard 6890	US00001434	GC - FID	7/20/2004

THIS STANDARD IS NIST TRACEABLE. IT WAS CERTIFIED ACCORDING TO THE EPA PROTOCOL PROCEDURES.
DO NOT USE THIS STANDARD IF THE CYLINDER PRESSURE IS LESS THAN 150 PSIG.

ANALYST: Cheryl Patino
CHERYL PATINO

DATE: 8/18/2004

Spectra Gases Inc.

3434 Route 22 West, Branchburg, New Jersey 08876 USA

ISO 9001:2000

Shipped from: 80 Industrial Drive, Alpha, NJ 08865

RECERTIFICATION OF ANALYSIS

EPA PROTOCOL MIXTURE

PROCEDURE # : G1

CUSTOMER: Cubix Corporation
SGI ORDER # : 0114877
ITEM# : 2
P.O.# : G48513

CYLINDER # : CC-91091
CYLINDER PRES: 1100 PSIG
CGA OUTLET: 590

CERTIFICATION DATE: 9/6/2007
EXPIRATION DATE: 9/5/2010

CERTIFICATION HISTORY

COMPONENT	DATE OF ASSAY	MEAN CONCENTRATION	CERTIFIED CONCENTRATION	ANALYTICAL ACCURACY
Carbon Monoxide	8/17/2004 9/5/2007	6.180 ppm 6.131 ppm	6.16 ppm	+/- 2%
Methane	8/17/2004 9/6/2007	5.09 ppm 5.08 ppm	5.09 ppm	+/- 1%

BALANCE Air

PREVIOUS CERTIFICATION DATES: 2/10/2004 & 8/17/2004 by Spectra Gases

REFERENCE STANDARDS

COMPONENT	SRM/NTRM#	CYLINDER#	CONCENTRATION
Carbon Monoxide	NTRM-82635x	CC-135210	19.53 ppm
Methane	SRM-1659a	CAL-013286	9.85 ppm

INSTRUMENTATION

COMPONENT	MAKE/MODEL	SERIAL #	DETECTOR	CALIBRATION DATE(S)
Carbon Monoxide	Thermo 48C	48CTL-69941-364	GFC-IR	8/21/2007
Methane	Nicolet 560	ADL9600109	FTIR	9/6/2007

THIS STANDARD IS NIST TRACEABLE. IT WAS CERTIFIED ACCORDING TO THE EPA PROTOCOL PROCEDURES.
DO NOT USE THIS STANDARD IF THE CYLINDER PRESSURE IS LESS THAN 150 PSIG.

ANALYST: Cheryl L Patino
CHERYL PATINO

DATE: 9/6/2007

Tel: +1 908-252-9300 Fax: +1 908-252-0811
www.spectragases.com

Spectra Gases, Inc.

3434 Route 22 West, Branchburg, New Jersey 08876 USA

ISO 9001:2000

Shipped from: 80 Industrial Drive, Alpha, NJ 08865

CERTIFICATE OF ANALYSIS

EPA PROTOCOL MIXTURE

PROCEDURE # : G1

CUSTOMER:	TRC CUbix	CYLINDER # :	CC-18078
SGI ORDER # :	101686	CYLINDER PRES:	1900 PSIG
ITEM# :	1	CGA OUTLET:	590
P.O.# :	G47523, T13		

CERTIFICATION DATE: 1/8/2007
EXPIRATION DATE: 1/2/2010

CERTIFICATION HISTORY

COMPONENT	DATE OF ASSAY	MEAN CONCENTRATION	CERTIFIED CONCENTRATION	ANALYTICAL ACCURACY
Carbon Monoxide	12/22/2006 1/2/2007	9.226 ppm 9.219 ppm	9.22 ppm	+/- 1%
Methane	1/8/2007	9.12 ppm	9.12 ppm	+/- 1%

BALANCE Air

PREVIOUS CERTIFICATION DATES: None

REFERENCE STANDARDS

COMPONENT	SRM/NTRM#	CYLINDER#	CONCENTRATION
Carbon Monoxide	NTRM-82635x	CC-134734	19.53 ppm
Methane	GMIS-1	CC-60213	24.9 ppm

INSTRUMENTATION

COMPONENT	MAKE/MODEL	SERIAL #	DETECTOR	CALIBRATION DATE(S)
Carbon Monoxide	Thermo 48C	48CTL-69941-364	GFC-IR	12/11/2006
Methane	H. Packard 6890	US00001434	GC - FID	1/8/2007

THIS STANDARD IS NIST TRACEABLE. IT WAS CERTIFIED ACCORDING TO THE EPA PROTOCOL PROCEDURES.
DO NOT USE THIS STANDARD IF THE CYLINDER PRESSURE IS LESS THAN 150 PSIG.

ANALYST: Cep
CHERYL PATINO

DATE: 1/8/2007

Tel: +1 908-252-9300 Fax: +1 908-252-0811
www.spectragases.com

Spectra Gases, Inc.

3434 Route 22 West, Branchburg, New Jersey 08876 USA

ISO 9001:2000

Shipped from: 80 Industrial Drive, Alpha, NJ 08865

CERTIFICATE OF ANALYSIS

EPA PROTOCOL MIXTURE

PROCEDURE # : G1

CUSTOMER:	TRC/Cubix Corporation	CYLINDER # :	CC-130978
SGI ORDER # :	0093733	CYLINDER PRES:	2000 PSIG
ITEM# :	2	CGA OUTLET:	590
P.O.# :	646864,ROGER		

CERTIFICATION DATE: 8/7/2006
EXPIRATION DATE: 7/31/2009

CERTIFICATION HISTORY

COMPONENT	DATE OF ASSAY	MEAN CONCENTRATION	CERTIFIED CONCENTRATION	ANALYTICAL ACCURACY
Carbon Monoxide	12/20/2005 7/31/2006	16.26 ppm 16.24 ppm	16.25 ppm	+/- 1%
Methane	8/7/2006	16.35 ppm	16.35 ppm	+/- 1%

BALANCE Air

PREVIOUS CERTIFICATION DATES: None

REFERENCE STANDARDS

COMPONENT	SRM/NTRM#	CYLINDER#	CONCENTRATION
Carbon Monoxide	NTRM-82635x	CC-135256	19.53 ppm
Methane	GMIS-1	CC-60213	24.9 ppm

INSTRUMENTATION

COMPONENT	MAKE/MODEL	SERIAL #	DETECTOR	CALIBRATION DATE(S)
Carbon Monoxide	Thermo 48C	48CTL-69941-364	GFC-IR	7/7/2006
Methane	H. Packard 6890	US00001434	GC - FID	7/19/2006

THIS STANDARD IS NIST TRACEABLE. IT WAS CERTIFIED ACCORDING TO THE EPA PROTOCOL PROCEDURES.
DO NOT USE THIS STANDARD IF THE CYLINDER PRESSURE IS LESS THAN 150 PSIG.

ANALYST: CP
CHERYL PATINO

DATE: 8/7/2006

Tel: +1 908-252-9300 Fax: +1 908-252-0811
www.spectragases.com

H-2
Reference Method Analyzer Checks

DeSoto County Energy Plant
CT Unit 1 - Stratification Test Results
2007 Annual Natural Gas Compliance + RATA Testing

Stratification Test Traverse Point Number	AVE NO_X (ppmv)	AVE CO (ppmv)	AVE O_2 (% vol)	AVE CO_2 (% vol)	NO_X (% Dev)	CO (% Dev)	O_2 (% Dev)	CO_2 (% Dev)	O_2 (% vol Diff)	CO_2 (% vol Diff)
SW-1	10.64	0.47	13.65	4.22	-6.0%	1.2%	0.2%	-0.6%	-0.03	0.03
-2	10.54	0.44	13.66	4.22	-5.0%	7.5%	0.1%	-0.6%	-0.02	0.03
-3	10.34	0.54	13.68	4.20	-3.0%	-13.5%	0.0%	-0.1%	0.00	0.01
SE-1	10.06	0.48	13.65	4.21	-0.3%	-0.9%	0.2%	-0.4%	-0.03	0.02
-2	9.78	0.44	13.67	4.20	2.5%	7.5%	0.0%	-0.1%	-0.01	0.01
-3	9.67	0.48	13.70	4.19	3.6%	-0.9%	-0.2%	0.1%	0.02	0.00
NE-1	9.82	0.53	13.67	4.19	2.1%	-11.4%	0.0%	0.1%	-0.01	0.00
-2	9.67	0.42	13.69	4.18	3.6%	11.7%	-0.1%	0.4%	0.01	0.01
-3	9.57	0.50	13.70	4.18	4.6%	-5.1%	-0.2%	0.4%	0.02	0.01
NW-1	10.20	0.50	13.67	4.19	-1.7%	-5.1%	0.0%	0.1%	-0.01	0.00
-2	10.09	0.42	13.68	4.18	-0.6%	11.7%	0.0%	0.4%	0.00	0.01
-3	10.03	0.49	13.69	4.18	0.0%	-3.0%	-0.1%	0.4%	0.01	0.01
Averages	**10.03**	**0.48**	**13.68**	**4.20**						
Minimum Reading	9.57	0.42	13.65	4.18	-6.0%	-13.5%	-0.2%	-0.6%		
Maximum Reading	10.64	0.54	13.70	4.22	4.6%	11.7%	0.2%	0.4%		

Notes: Note: Sampling was conducted per EPA Method 7e, Section 8.1 using a 12-point traverse. Sampling conducted in the subsequent test runs at one sample point for the remainder of testing. Per EPA Methods 3a, 7e, and 10, Section 8.1 sampling may be conducted at a reduced number of sampling points if results of the stratification tests meet methodology specifications. If the pollutant emissions are within ±5% of the mean of the normalized concentration or within ±0.5 ppmv for NO_X and/or CO concentrations and ±0.3% volume for O_2 and/or CO_2 concentrations, then sampling may be conducted at a single traverse point. If the pollutant emissions are within ±5% of the mean of the normalized concentration or within ±1.0 ppmv for NO_X and/or CO concentrations and ±0.5% volume for O_2 and/or CO_2 concentrations, then sampling may be conducted using a three point traverse along either the long or short measurement line specified in PS 2.

DeSoto County Energy Plant
CT Unit 2 - Stratification Test Results
2007 Annual Natural Gas Compliance + RATA Testing

Stratification Test Traverse Point Number	AVE NO_X (ppmv)	AVE CO (ppmv)	AVE O_2 (% vol)	AVE CO_2 (% vol)	NO_X (% Dev)	CO (% Dev)	O_2 (% Dev)	CO_2 (% Dev)	O_2 (% vol Diff)	CO_2 (% vol Diff)
SW-1	11.09	0.86	13.56	4.24	-4.4%	-14.3%	0.5%	-0.4%	-0.06	0.02
-2	10.66	0.77	13.61	4.24	-0.3%	-2.3%	0.1%	-0.4%	-0.01	0.02
-3	10.45	0.79	13.64	4.23	1.6%	-5.0%	-0.1%	-0.1%	0.02	0.01
SE-1	10.83	0.81	13.57	4.24	-1.9%	-7.6%	0.4%	-0.4%	-0.05	0.02
-2	10.90	0.80	13.60	4.24	-2.6%	-6.3%	0.2%	-0.4%	-0.02	0.02
-3	10.80	0.82	13.63	4.22	-1.6%	-9.0%	-0.1%	0.1%	0.01	0.00
NE-1	10.69	0.71	13.60	4.24	-0.6%	5.6%	0.2%	-0.4%	-0.02	0.02
-2	10.70	0.73	13.63	4.22	-0.7%	3.0%	-0.1%	0.1%	0.01	0.00
-3	10.62	0.74	13.60	4.22	0.0%	1.7%	0.2%	0.1%	-0.02	0.00
NW-1	10.34	0.67	13.65	4.20	2.7%	11.0%	-0.2%	0.6%	0.03	0.02
-2	10.19	0.64	13.70	4.20	4.1%	15.0%	-0.6%	0.6%	0.08	0.02
-3	10.23	0.69	13.67	4.20	3.7%	8.3%	-0.4%	0.6%	0.05	0.02
Averages	**10.63**	**0.75**	**13.62**	**4.22**						
Minimum Reading	10.19	0.64	13.56	4.20	-4.4%	-14.3%	-0.6%	-0.4%		
Maximum Reading	11.09	0.86	13.70	4.24	4.1%	15.0%	0.5%	0.6%		

Notes: Note: Sampling was conducted per EPA Method 7e, Section 8.1 using a 12-point traverse. Sampling conducted in the subsequent test runs at one sample point for the remainder of testing. Per EPA Methods 3a, 7e, and 10, Section 8.1 sampling may be conducted at a reduced number of sampling points if results of the stratification tests meet methodology specifications. If the pollutant emissions are within ±5% of the mean of the normalized concentration or within ±0.5 ppmv for NO_X and/or CO concentrations and ±0.3% volume for O_2 and/or CO_2 concentrations, then sampling may be conducted at a single traverse point. If the pollutant emissions are within ±5% of the mean of the normalized concentration or within ±1.0 ppmv for NO_X and/or CO concentrations and ±0.5% volume for O_2 and/or CO_2 concentrations, then sampling may be conducted using a three point traverse along either the long or short measurement line specified in PS 2.

Testing by TRC Environmental Corporation - Gainesville, Florida

BEST AVAILABLE COPY

Quality Assurance Report - NOX, CO, O2, CO2, and THC Response Time
NO_X, CO, O_2, CO_2, and THC Response Time

Date: August 14, 2007
Technician: LJB, CDH
Lab Unit #: Trailer 13

Test Instrumentation				
Analyzer	**Make**	**Model**	**Serial Number**	**Detection Method**
NO_X-A Analyzer	TECO	42C	42CHL-69541-363	Photodetection (of a chemi-luminescent reaction of nitric oxide and ozone
CO Analyzer	TECO	48	48-25149-219	IR Absorption/GFC Detector
O_2-A Analyzer	Servomex	1440	1420C/2647	Paramagnetic Cell Detector
CO_2-A Analyzer	Servomex	1440	01415/2537	IR Absorption/Solid State Detector
THC Analyzer	CAI	300-HFID	4J11003	Flame Ionization Detector

HRSG Stack Test Conditions	
Sample Line Vacuum	4.0 " Hg
Sample Manifold Pressure	5 psig
Analyzer Flow Meter Setting	1.0 lpm
Gas Standard Pressure	16 psig
Sample System Configuration:	120 ft. Heat Trace + Condenser

Response Time Test Results					
Parameter	**NO_X**	**CO**	**O_2**	**CO_2**	**THC**
Zero Gas Concentration	0.00	0.00	0.00	0.00	0.00
Span Gas Concentration	44.80	9.22	12.97	8.54	9.12
Analyzer Full Scale Range	109.80	16.25	22.10	8.54	16.35
Upscale Reponse Time Testing					
Starting Value	0.12	0.02	0.00	0.00	1.38
Final Average Response	44.04	9.39	12.95	8.47	10.95
Calculated 95% Response	41.84	8.92	12.30	8.05	10.47
Actual Response (≥95%)	42.46	8.94	12.33	8.27	10.74
Upscale Response Time (sec)	140	150	100	120	40
Downscale Reponse Time Testing					
Starting Value	44.16	9.41	20.95	8.49	10.74
Final Response	0.24	0.56	0.0	0.02	0.87
Calculated 95% Response	2.44	1.00	1.05	0.44	1.36
Actual Response (≥95%)	1.59	0.81	0.30	0.28	1.29
Downscale Response Time (sec)	140	120	100	120	30
Maximum System Response Time (seconds)				**150**	**seconds**
Minmum Sampling Time Each Sample Point				**300**	**seconds**
Sample Time Selected For Each Sample Point				**300**	**seconds**

Testing conducted by TRC Environmental Corporation - Gainesville, Florida

Reference Method Quality Assurance Data Sheet

Plant: **DeSoto Energy Park**

Source: **Turbines CT1 and CT2**

NOx Converter Efficiency Test					
NO_2 Cylinder ID	CC-133604	Concentration		50.4	
Expiration Date	6/11/2009	Min Pass	45.36	Max Pass	55.44
NOx-A	**NOx-A**	**NOx-A**			
Date	**Date**	**Date**		**Date**	
8/14/2007	8/18/2007	8/19/2007			
NO2 Response	**NO2 Response**	**NO2 Response**		**NO2 Response**	
48.89	49.7	49.98			
% Efficiency	**% Efficiency**	**% Efficiency**			
97.0%	**98.6%**	**99.2%**			
PASS	**PASS**	**PASS**			

NOx Converter Checks - Logged Data

Run Number	Date	Time	NOx (ppmv)
CT2-FO-NOx Conv			
START NOx Converter, 50.4	8/14/2007	10:33:06	48.80
NOx Converter, 50.4	8/14/2007	10:34:05	48.80
NOx Converter, 50.4	8/14/2007	10:35:06	48.92
NOx Converter, 50.4	8/14/2007	10:36:06	48.92
NOx Converter, 50.4	8/14/2007	10:37:06	48.92
NO2 = 50.4 ppm		**AVERAGE**	**48.89**
CT2-NG-NOx Conv			
START NOx converter check	8/18/2007	8:51:49	49.1904
NOx converter check	8/18/2007	8:52:49	49.6296
NOx converter check	8/18/2007	8:53:49	49.8492
NOx converter check	8/18/2007	8:54:49	49.8492
NOx converter check	8/18/2007	8:55:49	49.959
NO2 = 50.4 ppm		**AVERAGE**	**49.70**
CT1-NG-NOx Conv			
START Nox Converter Check	8/19/2007	8:39:49	49.7
Nox Converter Check	8/19/2007	8:40:49	49.9
Nox Converter Check	8/19/2007	8:41:49	50
Nox Converter Check	8/19/2007	8:42:49	50.1
Nox Converter Check	8/19/2007	8:43:49	50.2
NO2 = 50.4 ppm		**AVERAGE**	**49.98**

Continuous Emission Analyzer
Interference Response Tests

Analyzer Interference Response Checks

(Frequency: Prior to initial use of sampling system or after alteration or modification.)

Test Date: *September 27, 2002* *Technician:* *RPO*
Mobile Lab: *T-13* *Location:* *Gainesville, Florida*

Analyzer	Manufacturer	Model	Serial Number	Detection Method/Comments
NO_X Analyzer	TECO	42C	42CHL-69541-363	Chemiluminescence with Ozone
CO Analyzer	TECO	48C	48C-70472-365	Infrared Absorption/GFC Detector
O_2 Analyzer	Servomex	1440	1420C/2647	Paramagnetic Cell Detector
CO_2 Analyzer	Servomex	1440	01415/2537	Infrared Absorption/ Solid State Detector
THC	California Analytical	300-HMFID CE	5N05002	Flame Ionization Detector

Interferrent Test Gases		Analyzer Response (ppmv or % as applicable)				
Type Gas	Conc.	NO_X 0-25 ppmv	CO 0-50 ppmv	O_2 0-25% vol	CO_2 0-15% vol	THC 0-100 ppmv
CO/Methane in air	885/919	0.1 ppmv			0.00 %	
Propane in air	2000	0.1 ppmv	0.4 ppmv		0.03 %	
SO_2 in N_2	4400	0.2 ppmv	-0.3 ppmv	0.00 %	0.00 %	no data
Air	dry instrument	< 0.1 ppmv	0.4 ppmv		0.03 %	no data
Nitrogen	pre-purified	0.0 ppmv	0.3 ppmv	0.00 %	0.00 %	no data
Air	UHC, CO free	0.0 ppmv	0.0 ppmv		0.01 %	no data
CO_2/ O_2	4.54%/20.8%	< 0.1 ppmv	-0.2 ppmv			no data
CO_2/ O_2	8.004%/11.91%	< 0.1 ppmv	-0.4 ppmv			no data
CO_2/ O_2	12.62%/4.53%	< 0.1 ppmv	-0.6 ppmv			no data
NO_X in N_2	1209		0.4 ppmv	0.18 %	0.03 %	no data

Testing by TRC - Air Measurements - Gainesville Office

ALTIMETER TEST RECORD

This unit was tested and inspected IAW FAR Part 43, Appendix E, and is approved for return to service.

DATE: 04/05/06

WORK ORDER #: 16349

SCALE ERROR

-1000	-10
0	0
+ 500	-5
+1000	-5
+1500	-10
+2000	0
+3000	+5
+4000	+10
+6000	+15
+8000	+10
+10,000	+5
+12,000	+10
+14,000	0
+16,000	+5
+18,000	+5
+20,000	-20
+22,000	
+25,000	
+30,000	N/A
+35,000	
+40,000	
+45,000	
+50,000	

START PRESSURE 29.75

FINAL PRESSURE 29.75

BAROMETRIC SCALE ERROR TEST

28.10	-15	30.50	+20
28.50	-5	30.90	+10
29.00	-10	30.99	0
29.50	-15		
29.92	0		

FRICTION TEST

1000	20	20,000	40
2000	25	25,000	
3000	25	30,000	
5000	25	35,000	N/A
10,000	30	40,000	
15,000	35	50,000	

CASE LEAK TEST @ 18,000 0

CASE LEAK TEST @ 1,200 0

HYSTERESIS TEST @ 50% 25

HYSTERESIS TEST @ 40% 30

AFTER EFFECT 10

SERIAL NUMBER J5924

INSPECTOR [signature]

CERTIFICATE OF CALIBRATION

ISSUED BY:
MANNIX TESTING & MEASUREMENT
600 BROADWAY
LYNBROOK, NY 11563
516-887-7979 FAX: 516-887-7844

MANUFACTURER:	MANNIX
INSTRUMENT MODEL/TYPE:	DT1307DL K/J THERMOMETER
SERIAL NUMBER:	040507869
INSTRUMENT ACCURACY:	MFG SPECIFICATIONS
SECONDARY ID:	NONE
JOB NUMBER:	C32293
CERTIFICATE NUMBER:	32293-01

ISSUED TO:

TRC
6322 NORTHWEST 18TH DR.STE170
GAINESVILLE, FL 32653

PURCHASE ORDER NUMBER:

MANNIX certifies that the above listed instrument meets or exceeds all specifications as stated by the original manufacturer's specification or the referenced procedure (unless otherwise noted). It has been calibrated using measurement standards traceable to the National Institute of Standards and Technology (NIST), or NIST accepted intrinsic standards of measurement, or derived ratio type of self calibration techniques. This calibration complies with ISO-9001:2000, ISO/IEC 17025, MIL-STD-45662A and ANSI/NCSL Z540-1-1994. Unless stated in Calibration Notes below, a minimum test accuracy of 4:1 was used.

This report may not be reproduced, except in full, unless permission for the publication of an approved abstract is obtained in writing from MANNIX.

CALIBRATION INFORMATION FOR UNIT UNDER TEST (UUT)

CALIBRATION DATE:	03/05/2007	TEMPERATURE:	23 DEG C
NEXT CAL DUE DATE:	03/04/2008	HUMIDITY:	20 %
CONDITION RECEIVED:	IN TOLERANCE	CALIBRATION NOTES:	
CONDITION RETURNED:	IN TOLERANCE		

CALIBRATION STANDARDS USED

ASSET NUMBER	DESCRIPTION	NIST NUMBER	CAL DATE	DUE DATE
IPM-124	TC-100 THERMOCOUPLE STANDARD/CALIBRATOR	1203000801200600838 3	08/01/2006	08/01/2007

STEVE PICCOLO
CALIBRATION TECHNICIAN

TECHNICAL MANAGER

PreciseCal Services, Inc.

NIST Traceable Calibration Services

CERTIFICATE OF CALIBRATION

Company : TRC Air Measurements - FL
6322 NW 18th Dr. Ste. 170
Gainesville FL 32656

Cert Number 24412 - 5

PO Number N/A

Item:	Barometer	Cal Date:	08-Dec-06
Model No:	Digital	Cal Due Date:	08-Dec-07
Control#	N/A	Item Found:	As Noted
SN/ Other:	N/A	Item Returned:	Charted
Manufacturer:	Mannix	Procedure#:	T6-SCP-031

Tolerance: Charted

Standard:	30.264							inHg
Unit:	30.27							
Final Rdg:								

Tolerance:

Standard:								
Unit:								
Final Rdg:								

Location On-site Temperature: 64 Humidity 35

It is hereby certified that the above described instruments meets or exceeds all specifications as stated in the referenced procedure. This calibration is in accordance with the requirements of ANSI/NCSL Z540-1 and MIL STD 45662A, and is traceable to the National Institute of Standards and Technologies (NIST), or to intrinsic standards accepted as such by NIST.

Standard#	Cal Date	Due Date	NIST#	Uncertainty
832	4/17/2006	4/17/2007	06041744523	<0.005%

This certificate shall not be reproduced, except in full, without the written approval of PreciseCal Services.

Created by: N. Thomas Technician: A. Ramos

QC'd by QC CAS

PreciseCal Services, Inc.
3044 Scherer Drive North
St. Petersburg, FL 33716

Tel: 727-573-5063 Toll Free 877-450-4CAL
FAX: 727-572-4227
Email: Services@PreciseCal.com

PreciseCal Services, Inc.

NIST Traceable Calibration Services

CERTIFICATE OF CALIBRATION

Company : TRC Air Measurements - FL
6322 NW 18th Dr. Ste. 170
Gainesville FL 32656

Cert Number 24552 - 2

PO Number: G47527

Item:	Calibrator, Thermocouple	Cal Date:	02-Jan-07
Model No:	CL23A	Cal Due Date:	02-Jan-08
Control#	T243911	Item Found:	Within Tolerance
SN/ Other:	T243911	Item Returned:	Within Tolerance
Manufacturer:	Omega	Procedure#:	MFR Manual

Tolerance: MFR SPECS

Unit tested and found within manufacturers specifications on all functions and ranges.

Location Lab Temperature: 74 Humidity 40

It is hereby certified that the above described instruments meets or exceeds all specifications as stated in the referenced procedure. This calibration is in accordance with the requirements of ANSI/NCSL Z540-1 and MIL STD 45662A, and is traceable to the National Institute of Standards and Technologies (NIST), or to intrinsic standards accepted as such by NIST.

Standard#	Cal Date	Due Date	NIST#	Uncertainty
804	9/5/2006	9/5/2007	1157446235	< 4:1 Ratio

This certificate shall not be reproduced, except in full, without the written approval of PreciseCal Services.

Created by: N. Thomas Technician J. Cuevas QC'd by QC CAS

PreciseCal Services, Inc.
3044 Scherer Drive North
St. Petersburg, FL 33716

Tel: 727-573-5063 Toll Free: 877-450-4CAL
FAX: 727-572-4227
Email: Services@PreciseCal.com

BEST AVAILABLE COPY

PreciseCal Services, Inc.

NIST Traceable Calibration Services

CERTIFICATE OF CALIBRATION

Company : TRC Air Measurements - FL
6322 NW 18th Dr. Ste. 170
Gainesville FL 32656

Cert Number 24552 - 7

PO Number G47527

Item:	Thermometer, Glass	Cal Date:	20-Dec-06
Model No:	-20-150°C	Cal Due Date:	20-Dec-07
Control#:	6448	Item Found:	Within Tolerance
SN/ Other:	N/A	Item Returned:	Within Tolerance
Manufacturer:	Ertco	Procedure#:	3-SCP-004

Tolerance: ± 1°C

Standard:	0.0	75.0	150.0					°C
Unit:	0	75	150					
Final Rdg:								

Tolerance:

Standard:								
Unit:								
Final Rdg:								

Location: Lab Temperature: 72 Humidity 56

It is hereby certified that the above described instruments meets or exceeds all specifications as stated in the referenced procedure. This calibration is in accordance with the requirements of ANSI/NCSL Z540-1 and MIL STD 45662A, and is traceable to the National Institute of Standards and Technologies (NIST), or to intrinsic standards accepted as such by NIST.

Standard#	Cal Date	Due Date	NIST#	Uncertainty
T725	11/15/2006	2/15/2007	24340-1	<0.005 C
T614	8/3/2006	8/3/2007	A6725008	< 0.016 degC

This certificate shall not be reproduced, except in full, without the written approval of PreciseCal Services.

Created by: N. Thomas Technician: A. Ramos

QC'd by QC CAS

PreciseCal Services, Inc.
3044 Scherer Drive North
St. Petersburg, FL 33716

Tel: 727-573-5063 Toll Free 877-450-4CAL
FAX: 727-572-4227
Email: Services@PreciseCal.com

TRC