Check Sheet

Company Name: Florida Solite Company
Permit Number: AC10-222486
PSD Number:
Permit Engineer:

Application:

- ☑ Initial Application
  - ☑ Incompleteness Letters
  - ☑ Responses
  - ☐ Waiver of Department Action
  - ☐ Department Response
  - ☐ Other

Cross References:
- ☐
- ☐
- ☐

Intent:

- ☑ Intent to Issue
- ☑ Notice of Intent to Issue
- ☑ Technical Evaluation
- ☒ BACT or LAER Determination
- ☑ Unsigned Permit
  - Correspondence with:
    - ☐ EPA
    - ☐ Park Services
    - ☐ Other
- ☑ Proof of Publication
  - ☐ Petitions - (Related to extensions, hearings, etc.)
  - ☐ Waiver of Department Action
  - ☐ Other

Final Determination:

- ☑ Final Determination
- ☑ Signed Permit
- ☒ BACT or LAER Determination
  - ☐ Other

Post Permit Correspondence:

- ☐ Extensions/Amendments/Modifications
- ☐ Other

Department of Environmental Protection

Lawton Chiles
Governor

Twin Towers Office Building
2600 Blair Stone Road
Tallahassee, Florida 32399-2400

Virginia B. Wetherell
Secretary

January 17, 1995 → 1996

CERTIFIED MAIL - RETURN RECEIPT REQUESTED

Mr. Tony Saunders, Plant Manager
Florida Solite Company
Post Office Box 297
Green Cove Springs, Florida 32043

Dear Mr. Saunders:

RE: Permit No. AC 10-222486
Alteration to Kilns Nos. 1, 1A, and 5

The Department acknowledges receipt of Mr. John Kopelousos' letter dated November 27, 1995, withdrawing the request to modify the referenced kilns by installing a baghouse and associated equipment. This withdrawal is accepted and the Department has ceased processing this request. Should Florida Solite Company plan future alterations to this facility, a new application for permit to construct will need to be submitted to this office.

If you have any questions on this matter, please call Willard Hanks at (904) 488-1344.

Sincerely,

C. H. Pancy, P.E.
Chief
Bureau of Air Regulation

CHF/wh/t

cc: J. Braswell, OGC
J. Harper, EPA
J. Bunyak, NPS
C. Kirts, NED
J. Koogler, P.E.
J. Kopelousos, Esq.

Is your RETURN ADDRESS completed on the reverse side?

SENDER:
- Complete items 1 and/or 2 for additional services.
- Complete items 3, and 4a & b.
- Print your name and address on the reverse of this form so that we can return this card to you.
- Attach this form to the front of the mailpiece, or on the back if space does not permit.
- Write "Return Receipt Requested" on the mailpiece below the article number.
- The Return Receipt will show to whom the article was delivered and the date delivered.

I also wish to receive the following services (for an extra fee):
1. ☐ Addressee's Address
2. ☐ Restricted Delivery

Consult postmaster for fee.

3. Article Addressed to:
Tony Saunders, Plant Mgr.
Fla. Solite Co.
P.O. Box 297
Green Cove Springs, Fl
32043

4a. Article Number
Z 127 633 149

4b. Service Type
☐ Registered ☐ Insured
☑ Certified ☐ COD
☐ Express Mail ☐ Return Receipt for Merchandise

7. Date of Delivery
JAN 22 1996

5. Signature (Addressee)

8. Addressee's Address (Only if requested and fee paid)

6. Signature (Agent)

GREEN COVE SPRINGS FL 32043

PS Form 3811, December 1991 ☆U.S. GPO: 1993—352-714 **DOMESTIC RETURN RECEIPT**

Thank you for using Return Receipt Service.

Z 127 633 149

Receipt for Certified Mail
No Insurance Coverage Provided
Do not use for International Mail
(See Reverse)

UNITED STATES POSTAL SERVICE

Sent to Tony Saunders	
Street and No. Fla. Solite	
P.O., State and ZIP Code Green Cove Sp., Fl	
Postage	$
Certified Fee	
Special Delivery Fee	
Restricted Delivery Fee	
Return Receipt Showing to Whom & Date Delivered	
Return Receipt Showing to Whom, Date, and Addressee's Address	
TOTAL Postage & Fees	$
Postmark or Date 1-17-96 AC10-222486	

PS Form 3800, March 1993

Best Available Copy

NORTHEAST DISTRICT
RECEIVED
DEC 06 1995
JACKSONVILLE

JOHN KOPELOUSOS
ATTORNEY AT LAW
1279 KINGSLEY AVENUE
SUITE 118
ORANGE PARK, FLORIDA 32073

TELEPHONE:
(904) 269-1111
TELECOPIER:
(904) 269-1115

MAILING ADDRESS:
POST OFFICE BOX 562
ZIP: 32067-0562

November 27, 1995

Virginia B. Wetherell
Secretary
Department of Environmental Protection
Marjory Stoneman Douglas Building
3900 Commonwealth Boulevard
Tallahassee, FL 32399-3000

RE: Florida Solite Permit No. AC 10-222486
Clay County, Florida

Dear Ms. Wetherell:

This is to advise that the Applicant, Florida Solite Company, hereby withdraws its application for the above-styled permit.

Very truly yours,

John Kopelousos

JK/ts

cc: Jefferson M. Braswell
Thomas K. Maurer
Julie Hellmuth
Priscilla Harris
Allison Norwood
Stewart Harris
Jon J. Jewett

I N T E R O F F I C E M E M O R A N D U M

Date: 11-Jan-1995 02:26pm EST
From: Marjane Monahan TAL
MONAHAN_M
Dept: Office General Counsel
Tel No: 904/488-9730
SUNCOM: 278-9730

TO: See Below

Subject: FLORIDA SOLITE DEPOSITIONS

This will confirm your meeting tomorrow morning (Thursday, Jan. 12) at 8:30 in John Ruddell's office to prepare for depositions in the Florida Solite case. Please notify Marjane at 1-9682 today or Jeff at 1-9625 tomorrow morning if you have questions.

Distribution:

TO:	John Ruddell TAL	(RUDDELL_J)
TO:	Bill Hinkley TAL	(HINKLEY_B)
TO:	Clair Fancy TAL	(FANCY_C)
TO:	Willard Hanks TAL	(HANKS_W)
CC:	Jeff Braswell TAL	(BRASWELL_J)
CC:	William Congdon TAL	(CONGDON_W)

DEC. 12, 1994

STATE OF FLORIDA
DIVISION OF ADMINISTRATIVE HEARINGS

JULIE HELLMUTH, Petitioner, v. CAROLINA SOLITE CORPORATION d/b/a FLORIDA SOLITE COMPANY and STATE OF FLORIDA DEPARTMENT OF ENVIRONMENTAL PROTECTION, Respondents.	DOAH Case No. 94-004057 OGC Case No. 94-2284
PRISCILLA N. HARRIS, Petitioner, v. CAROLINA SOLITE CORPORATION d/b/a FLORIDA SOLITE COMPANY and STATE OF FLORIDA DEPARTMENT OF ENVIRONMENTAL PROTECTION, Respondents.	DOAH Case No. 94-004058 OGC Case No. 94-2305
ALLISON NORWOOD, Petitioner, v. CAROLINA SOLITE CORPORATION d/b/a FLORIDA SOLITE COMPANY and STATE OF FLORIDA DEPARTMENT OF ENVIRONMENTAL PROTECTION, Respondents.	DOAH Case No. 94-004059 OGC Case No. 94-2306
STEWART HARRIS, Petitioner, v. CAROLINA SOLITE CORPORATION d/b/a FLORIDA SOLITE COMPANY and STATE OF FLORIDA DEPARTMENT OF ENVIRONMENTAL PROTECTION, Respondents.	DOAH Case No. 94-004060 OGC Case No. 94-2307

FIRST SET OF INTERROGATORIES OF PETITIONER ALLISON NORWOOD TO STATE OF FLORIDA DEPARTMENT OF ENVIRONMENTAL PROTECTION

Pursuant to Rules 1.280 and 1.340 of the Florida Rules of Civil Procedure, and Rule 60Q-2.019 of the Florida Administrative Code, Petitioner Allison Norwood, through her attorney Priscilla N. Harris, serves this First Set of Interrogatories on Respondent State of Florida Department of Environmental Protection (Department). Each interrogatory shall be answered in writing and under oath. When the answer to the interrogatory must be derived or ascertained from your written records, attach copies of the applicable documents to your answers to these interrogatories. Respondent must serve its answers to these interrogatories within thirty days of the date of service herein.

If a claim of privilege, attorney work product protection, trade secret, confidentiality, or other ground for non-response or non-production, either in whole or in part, is made, submit a statement which:

a. specifies the privilege or basis for the work product protection or other ground for non-response for non-production;

b. lists each document;

c. describes the nature and general topic of the document to the extent possible in a manner consistent with the privilege, work product protection or other asserted ground for non-response or non-production;

d. identifies the person or people who prepared the document and the person or people to whom the document was sent;

e. identifies such other person who has seen or has had possession of the document;

f. specifies the dates on which the document was prepared and transmitted;

"DEP" means the Florida Department of Environmental Protection.

"Document" or "Documents" means all paper materials of any kind, whether written, types, printed, punched, filmed, or marked in any way; film, photographs, movies, or any graphic matter however produced or reproduced; and all mechanical or electronic sound records, tapes, or transcripts thereof.

"EPA" means the United States Environmental Protection Agency.

"Existing Baghouse" means the baghouse constructed for Kiln 5 at the Facility.

"Facility" means the facility operated by Carolina Solite Corporation d/b/a Florida Solite Company located on County Road 209A, north of Green Cove Springs, Clay County, Florida, 32043.

"Dioxins" mean polychlorinated dibenzo-*p*-dioxins.

"Identify" or "Identification," when used in reference to an individual person, means to state his full name, present address, if known, and his present employment position and corporate, governmental agency, or departmental affiliation. When used in reference to a person other than a natural person, "identify" or "identification" means to state whether such person is a governmental agency, or corporation, or some other business association and the name and last known address of such organization. Once any person has been identified properly, it

shall be sufficient thereafter when identifying that same person to state the name only.

"Identify" or "identification," when used in reference to a document, means to state the document's date, author (or, if different, the signer or signers), the type of document (e.g., letter, memorandum, telegram, chart, sketch, diagram, etc.), and any other means of identifying it with sufficient particularity to meet the requirements for its inclusion in a request for a production of documents under Florida Rule of Civil Procedure 1.350. If any such document was but is no longer in your possession, custody, or control, state what disposition. In lieu of identifying any document, a true copy thereof may be attached to the answers to these interrogatories.

"Permit" means requested Permit No. AC10-222486.

"Person" means a corporation, partnership, or any other business association or entity; a natural person; or any government or governmental body, commission, department, board, or agency.

"Petition" means the Petition filed by Allison Norwood on July 13, 1994, regarding the Permit.

"Solite" means Carolina Solite Corporation d/b/a Florida Solite Company.

"Wet scrubbers" mean the pollution control devices used for Kilns 1, 1A, and 5 at the Facility, not including the existing baghouse.

"You" or "your" refers to DEP, its employees, agents or

attorneys.

Interrogatories

1. In chronological order, describe all inspections at the Facility performed by DEP or any contractor of DEP in 1988, 1989, 1990, 1991, 1992, 1993, and 1994.

   See attached.

2. Identify the persons conducting the inspections in question 1.

   See attached.

3. How long will Solite be allowed to burn hazardous waste in Kiln 5 at the Facility without an operating permit?

See attached.

4. Explain why DEP has not issued a final agency decision denying the operating permit for the baghouse for Kiln 5 at the Facility based on section 403.7895, F.S..

See attached.

5. Identify each and every warning and/or violation letter sent to Solite concerning the Facility.

See attached.

6. If DEP has not required Solite to submit actual emissions for each and every pollutant listed in Table 17-212.400-2, F.A.C. for both wet scrubbers and the existing baghouse, explain why not.

See attached.

7. Explain why DEP has failed to include dioxin and furan standards in the Permit.

See attached.

8. Explain why the Department did not require Solite to submit

actual dioxin and furan emissions from the wet scrubbers and the existing baghouse.

See attached.

9. Explain the extent of DEP's discretion in granting air construction permits.

See attached.

10. Explain why DEP issued a notice of intent to deny a permit to Florida First Processing, Inc. but decided to grant the Permit.

See attached.

11. Explain why the Permit would allow Solite to burn hazardous waste fuel when it is DEP's view that section 403.7895, F.S., applies to any air operating permit for the proposed baghouse.

See attached.

12. Explain why DEP believes that Solite has provided reasonable assurances that it will not cause pollution when Solite has repeatedly experienced serious problems with emissions from the wet scrubbers and with discharges from the scrubber pond.

See attached.

13. Explain why DEP did not require Solite to show that the personnel who will be operating the proposed baghouse and emission monitoring systems are qualified and trained to operate such.

See attached.

14. If DEP has not required Solite to apply for a permit or a permit modification under Chapter 17-730, F.A.C., as a hazardous waste facility, explain why not.

See attached.

15. If DEP has not required Solite to apply for a permit or a permit modification under Chapter 17-701, F.A.C., as a solid waste management facility, explain why not.

See attached.

16. What is the rational basis for not considering Solite "a commercial hazardous waste incinerator" under section 403.7895, F.S., for purposes of this proposed air construction permit?

See attached.

17. If DEP has not required Solite to install warning signs at the Facility under Chapter 17-736, F.A.C., explain why not.

See attached.

18. What person or persons from DEP were involved in the passage, lobbying, and/or drafting of section 403.7895, F.S.?

See attached.

19. Were the person or persons listed in the response to question number 18 consulted or spoken to concerning the applicability of section 403.7895, F.S. to the Permit?

See attached.

20. If it is DEP's view that Solite can meet the applicable current federal emission standards for particulate matter using the wet scrubbers, explain the basis for that view.

See attached.

21. If it is DEP's view that Solite can meet the potential federal emission standards for particulate matter of 0.015 gr/dscf using the wet scrubbers, explain the basis for that view.

See attached.

22. If it is DEP's view that Solite can meet the potential federal emission standard for dioxin/furan of 30 ng/dscm using the wet scrubbers, explain the basis for that view.

See attached.

23. Identify each person who you expect to call as a witness at trial (but not as an expert witness) and state the subject matter of each witnesses' testimony.

See attached.

24. Identify each person you expect to call as an expert witness at trial in this matter and state:

a. the subject matter of each expert's testimony.

See attached.

b. The substance of the facts and opinions to which each expert is expected to testify and a summary of the grounds for each opinion.

See attached.

c. the detailed qualifications of each witness to render an opinion in the claimed area of expertise.
Expert witnesses.

See attached.

STATE OF FLORIDA)
COUNTY OF SS

Before me, the undersigned authority, personally came and appeared Jefferson M. Braswell, DEP Employee, who first being duly sworn did depose and say that he/~~she,~~ _____, did execute the foregoing Answers to Petitioner Allison Norwood's First Set of Interrogatories to DEP, and that the same are true, accurate and correct to the best of his/her knowledge, information and belief.

SWORN TO AND SUBSCRIBED before me this 12th day of December, 1994.

Iris A. Littleton
Notary Public
State of Florida

My Commission Expires:

ANSWERS TO RESPONDENT'S INTERROGATORIES

1.

Inspection Date	Inspector	Description
7/20/88	S. Mazur	Air permit inspection
8/31/88	S. Mazur	Air permit inspection
8/31/89	S. Mazur	Air permit inspection
1/23/90	S. Mazur	Air permit inspection
3/20/90	S. Mazur	Air permit inspection
4/30/90	S. Mazur	Air permit inspection
3/18/91	V. Seibold	Industrial waste water
4/09/91	S. Mazur	Air permit inspection
3/12/92	R. Bowan	Industrial waste water
6/19/92	S. Mazur	Air permit inspection
1/26/93	R. Bowan	Industrial waste water
10/17/93	S. Mazur	Air permit inspection
10/23/93	E. Cordova	Industrial waste water
4/08/93	S. Mazur	Air permit inspection
5/11/93	S. Mazur	Air permit inspection
5/12/93	S. Mazur	Air permit inspection
10/08/93	S. Mazur	Air permit inspection
6/16/94	M. Dunbar	Industrial waste water
6/30/94	P. Fellabaum	Hazardous waste inspection
10/28/94	S. Mazur	Air permit inspection

2. All inspections performed for the Department were performed by the staff of the Northeast District Office, 7825 Baymeadows Way, Jacksonville, Florida 32256-7577. (904) 448-4310.

Stan Mazur, Engineer II

Michael Dunbar, Engineer I

Edward Cordova, Engineer II

Richard Bowman, Engineer III

Vincent Seibold, Engineer IV

Pam Fellabaum, Engineer

3. Under Department air pollution control regulations, Florida Solite can continue to operate as long as they have a valid license under Chapter 120, F.S.,construction permit and are in

compliance with the conditions of the license. Solite must also comply with all federal requirements.

4. Pursuant to Section 120.60(2) and 403.0876, Florida Statutes, Solite waived the right under Sections 120.60(2) and 403.0876, Florida Statutes, to have the application approved or denied by the Department within the 90 day time prescribed.

5. The Department lists the following violation letters or consent orders:

05/16/86	Failed stack test / VE emissions
12/08/86	Excess sulfur in fuel
03/24/87	Did not submit quarterly groundwater monitoring
02/06/89	Did not submit groundwater and surface water tests
06/10/91	Contaminated process water discharged to surface waters of the state
04/11/94	Kiln 1 failed stack test

6. Based on the installation of more advanced pollution control equipment the project will not result in a significant net emissions increase of any criteria pollutant. Therefore, the project is not subject to the Prevention of Significant Deterioration regulations. Therefore, Chapter 62-212.400-2, F.A.C. is not applicable to Solite's permit, and Solite is not required to submit actual emissions for each and every pollutant listed. Florida Solite's testing and reporting requirements are specified in its air permit. The requirements would cover only those air pollutants which have an emission standard listed in the permit.

7. The Department does not have an emission standard for dioxin/furan in the air regulations. As specified in the proposed permit, certain dioxin/furan waste fuels cannot be burned in the kilns.

8. The Department does not have regulations that impose an emission standard for dioxin/furan on these kilns. Without the authority to regulate these pollutants and no reason to expect an increase in any emissions as a result of the proposed project, the information was not considered necessary. The wet scrubbers are not currently in use for burning hazardous waste so that actual emissions from the wet scrubbers are not available.

9. The Department must issue or issue with conditions a permit if a proposal complies with the air regulations, or the Department must deny an air permit if it does not comply with the air regulations. The Department has no discretion in granting air construction permits. The Department's standards and requirements for the issuance of construction permits is contained in 62-4, Florida Administrative Code.

10. Floirda First Processing, Inc.'s permit application did not meet applicable standards for the issuance of a permit. The intent to deny a permit to Florida First Processing, Inc. was issued prior to the passage of Section 403.7895, F.S. The Department issued the construction permit to Florida Solite because it had reasonable assurance the the baghouse and other

related pollution control equipment could meet applicable regulations.

11. Florida Solite is an existing facility that has been and is currently permitted by the Department to burn hazardous waste. The proposed construction permit applies only to the construction of the baghouse and associated air pollution control equipment (the proposed permit does not authorize a change in the operation of the kilns) and the operation permit will apply to the whole system which includes the kiln. It is the operating permit for the kiln that would be subject to Section 403.7895, F.S. This air pollution control equipment permit application is not an application for a commercial hazardous waste incinerator. It is only for a project associated with a commercial hazardous waste incinerator's pollution control equipment.

12. The Department is not required to have reasonable assurance that Solite will not cause pollution. The legal standard for the issuance of permits is whether the Department has reasonable assurance that Solite will remain in compliance with applicable rules and statutes.

13. The permit requires Solite to comply with the BIF rules, and BIF rules require training for personnel at the Solite facility.

14. Florida Solite is subject to the Boiler and Industrial Furnace section (40 CFR 266, Subpart H) of the hazardous waste

regulations. Florida has not received delegation from EPA to administrator these regulations. Without delegation from the EPA, the Department does not have authority to issue permits for this type of hazardous waste facility. Chapter 17-730, F.A.C., does not contain provisions for the regulation of industrial furnaces. Solite has applied for a hazardous waste facility permit with the EPA, and the EPA is currently processing Solite's permit application.

15. Rule 62-701, F.A.C., applies to solid waste management facilities. Florida Solite is not a solid waste management facility because it does not generate, store or dispose on site any solid waste.

16. The application in question is for a baghouse and associated air pollution control equipment for an existing commercial hazardous waste incinerator. Section 403.7895, F.S., applies to applications for commercial hazardous waste incinerators. Since the baghouse applications are not applications for commercial hazardous waste incinerator, they do not fall within the applicability language of Section 403.7895 and are not governed by that Section.

17. Solite is required to install warning signs at the Facility under Chapter 62-736, F.A.C.

18. John Ruddell, Bill Hinkley, Doug Beason, Bill Congdon, Jeff Braswell, Satish Kastury, Raoul Clark

19. Yes.

20. Based on stack test from the wet scrubbers and past performance, the Department has concluded that the wet scrubbers may meet applicable emission standards for particulate matter.

21. The wet scrubbers cannot consistently reduce particulate matter emissions to 0.015 gr/dscf. The federal particulate matter emission standard for this source specified in 40 CFR 266.105 is 0.08 gr/dscf @ 7% O2.

22. Florida Solite is required to demonstrate to EPA that any dioxins/furan are in compliance with the federal requirements specified in 40 CFR 266.104. The Department's air regulations do not have a standard for these pollutants. The Department does not have a view at this time concerning the wet scrubbers ability to meet the proposed standard.

23. At the time of preparing these interrogatories the Department does not have any definite witness it intends to call at hearing. The Department is currently considering Willard Hanks and Clair Fancy from the Department's Division of Air Resources Management, Tallahassee, Florida. These two

individuals can be contacted at the undersigned attorney's address.

24. At the time of preparing these interrogatories the Department has not consulted with any potential witness that may be called as an expert at the hearing and does not anticipate the use of any expert witnesses at hearing.

file

Florida Department of
Environmental Protection

Memorandum

TO: Bill Congdon

FROM: Clair Fancy, Bureau of Air Regulation

DATE: October 10, 1994

SUBJECT: Florida Solite Company
Amended Proposed Permit: AC 10-222486

At the request of OGC, the Bureau of Air Regulation has amended the proposed air construction permit for Florida Solite Company to install a baghouse on kilns 1 and 1A to address the applicant's comments.

It is our understanding that OGC will distribute copies of the amended proposed permit to the applicant, petitioners, the Department's Northeast District, and other interested parties.

CHF/WH/bjb

Attachment

BEST AVAILABLE COPY

PROPOSED PERMIT AMENDMENT
Permit No. AC10-222846

The Technical Evaluation and Preliminary Determination for the permit to construct baghouse No. 1 and the associated equipment at Florida Solite Company's lightweight clay aggregate manufacturing facility near Green Cove Springs, Clay County, Florida, was distributed on June 10, 1994. The Notice of Intent to Issue was published in the Clay Today on June 29, 1994. Copies of the evaluation were available for public inspection at the Department's offices in Jacksonville and Tallahassee.

Comments on the proposed permit were submitted by the applicant; and, petitions for hearings were submitted by 4 members of the public.

The Department is amending the proposed permit to allow all interested parties to negotiate the latest proposed permit prior to or during any administrative hearing.

A summary of the comments on the proposed permit submitted by the applicant's engineer in a letter dated July 5, 1994, and the Department's response to these comments follows.

The applicant had a general comment that a separate category of fuel, nonhazardous liquid burnable material (LBM), be authorized by this permit and that the kiln be allowed to use the scrubber to control emissions when this fuel is being burned. The applicant said that the nonhazardous LBM has a completely separate and independent fuel system and shares no storage and transfer equipment with any other fuel at this facility. The kiln's burner can burn all liquid fuels. The proposed permit is amended to allow the burning of LBM, which is not subject to 40 CFR 266, Subpart H, while the emissions from the kiln are being controlled by either a baghouse or the scrubber.

Comment 1: Extend the permit expiration date for a year to allow time to install baghouse No. 1, conduct the compliance tests, and submit an application for permit to operate.

Response 1: The expiration date of the permit is revised to January 15, 1996.

Comment 2: Delete or reword Specific Condition No. 7 so that the applicant can challenge the requirement for Maximum Available Control Technology (MACT) for mercury under the provisions of Chapter 120, F.S.

Response 2: MACT will have to be considered as part of the application for any permit to operate these kilns. Specific Condition No. 7 will not be changed. The applicant has the right to challenge this requirement now.

BEST AVAILABLE COPY

Comment 3: Revise Specific Conditions Nos. 8 and 19 to allow kiln No. 1 to operate continuously if kiln 1A has not been used during the year.

Response 3: This request is denied because construction permit No. AC 10-125262 limits the kilns to 7,600 hrs/yr operation. A new construction permit is required to increase the allowable operation time of these kilns. (See Comment 5).

Comment 4: The applicant requested permission to sample and analyze the liquid burnable material (LBM) storage tanks feeding the burn tank instead of the burn tank, as was specified in Specific Condition No. 10 of the proposed permit.

Response 4: Sampling and reporting the analysis of the LBM in the tanks feeding the burn tank is acceptable provided that no constituent in the LBM stored in these tanks exceed the maximum concentration allowed by the rules and this permit. Specific Condition No. 10 has been revised to state this.

Comment 5: The applicant asked permission to operate kilns 1 and 1A at the same time, which is prohibited by this proposed permit and the previous construction permit.

Response 5: The Department will require a new application and construction permit to consider changing this condition. (See Comment 3)

Comment 6: The applicant asked that Specific Condition No. 20 be revised to allow the maximum input of admixtures to increase from 500 to 800 lbs/hr.

Response 6: This increase is approved with the condition that the particulate matter compliance test be conducted while at least 720 lbs/hr of admixture is being used. Specific Conditions Nos. 20 and 26 are revised to incorporate this change.

Comment 7: The applicant asked that Specific Condition No. 23 be revised to clarify that the oxygen concentration is to be obtained by stack gas monitoring.

Response 7: To clarify the intent, the Department has added to Specific Condition No. 23 that the continuous emission monitoring for oxygen in the stack gases shall meet the requirements of 40 CFR 266, Appendix IX.

Comment 8: The applicant requested that Specific Condition No. 26 be reworded to clarify that the testing of kilns 1 and 1A within 30 days of placing each kiln into service with baghouse No. 1 applies to each kiln separately and that the emission testing requirements be relaxed.

BEST AVAILABLE COPY

Response 8: The Department is rewording Specific Condition No. 26 to clarify when the tests are to be conducted on kilns 1 and 1A.

Comment 9: The applicant asked that some of the emission testing requirements in the proposed permit be relaxed.

Response 9: The Department will allow the use of EPA Method 6C instead of Method 6 to measure sulfur dioxide emissions.

The use of EPA Method 25A to measure volatile organic compound emissions will have to be requested and approved as an Alternate Stack Procedure (Rule 62-297.620, F.A.C.) before it can be used on these kilns.

Because of the concern about the emissions from burning fuels subject to 40 CFR 266, Subpart H, in these kilns, the other tests and proposed testing frequency are being retained.

The final action of the Department on the proposed construction permit will be dependent on the outcome of the negotiations or administrative hearing.

BEST AVAILABLE COPY

Department of Environmental Protection

Twin Towers Office Building
2600 Blair Stone Road
Tallahassee, Florida 32399-2400

Lawton Chiles
Governor

Virginia B. Wetherell
Secretary

PERMITTEE:
Florida Solite Company
P. O. Box 297
Green Cove Springs, FL 32043

Permit Number: AC 10-222486
Expiration Date: January 15, 1996*
County: Clay
Latitude/Longitude: 30°04'07"N
81°45'17"W
Project: Baghouse No. 1 Project

This permit is issued under the provisions of Chapter 403, Florida Statutes, and Florida Administrative Code Chapters **62-212** and **62-4**. The above named permittee is hereby authorized to perform the work or operate the facility shown on the application and approved drawings, plans, and other documents attached hereto or on file with the Department and made a part hereof and specifically described as follows:

Authorization to install: baghouse No. 1, a top load pulse-jet dust collector (or equivalent); heat exchanger; modify the duct systems for kilns Nos. 1, 1A, and 5 to allow any kiln to discharge through either baghouse No. 5 (existing) or baghouse No. 1 (new); a pug mill filter receiver; a clinker hopper filter receiver; pneumatic system to connect the new baghouse to the existing lime and clay fines systems; and associated equipment.

The existing scrubber systems may be used to control the emissions from any of the kilns when **only fuels not regulated by 40 CFR 266, Subpart H,** are being used in the kiln. **This can include some liquid burnable material (LBM).**

Stack parameters for the sources covered by this permit are:

Stack	Height (ft.)	Diameter (ft.)	ACFM	DSCFM	Temp(°F)
Baghouse No. 1	72	4.33	78,400	40,000	420
Clay Fines Bin (Existing)	53	0.5	900	800	100
Lime Bin (Existing)	65	0.5	722	675	77
Pug Mill Filter Receiver	30	0.42	570	525	80
Clinker Hopper Filter Receiver	30	0.42	570	525	80

The baghouses do not have by-pass stacks. Except for fugitive emissions, all emissions must pass through a baghouse.

Printed on recycled paper

Baghouse No. 1 and the associated equipment will be located at the permittee's lightweight aggregate manufacturing facility (SIC 3295) on County Road 209A, north of Green Cove Springs, Clay County, Florida 32043. The UTM coordinates of this site are Zone 17, 427.3 km E and 3326.5 km N.

*This permit is void if construction does not commence within 18 months of its issuance, if construction is discontinued for more than 18 months, or if construction is not completed and the plant is not placed in operation within a reasonable time.

The source shall be constructed in accordance with the permit application, plans, documents, amendments and drawings, except as otherwise noted in the General and Specific Conditions.

Attachments are listed below:

1. Application received November 30, 1992.
2. DER's December 22, 1992, letter.
3. Koogler's September 10, 1993, letter.
4. DEP's October 12, 1993, letter.
5. Koogler's December 14, 1993, letter.
6. DEP's January 13, 1994, letter.
7. Koogler's February 17, 1994, letter.
8. Koogler's February 28, 1994, letter.
9. Florida Solite's March 15, 1994, letter.
10. DEP's March 31, 1994, letter.
11. Koogler's April 6, 1994, letter.
12. Koogler's July 5, 1994, letter.
13. Koogler's August 31, 1994, letter.

GENERAL CONDITIONS:

1. The terms, conditions, requirements, limitations, and restrictions set forth in this permit are "Permit Conditions" and are binding and enforceable pursuant to Sections 403.161, 403.727, or 403.859 through 403.861, Florida Statutes. The permittee is placed on notice that the Department will review this permit periodically and may initiate enforcement action for any violation of these conditions.

2. This permit is valid only for the specific processes and operations applied for and indicated in the approved drawings or exhibits. Any unauthorized deviation from the approved drawings, exhibits, specifications, or conditions of this permit may constitute grounds for revocation and enforcement action by the Department.

3. As provided in Subsections 403.087(6) and 403.722(5), Florida Statutes, the issuance of this permit does not convey any vested rights or any exclusive privileges. Neither does it authorize any injury to public or private property or any invasion of personal rights, nor any infringement of federal, state or local laws or regulations. This permit is not a waiver of or approval of any other Department permit that may be required for other aspects of the total project which are not addressed in the permit.

4. This permit conveys no title to land or water, does not constitute State recognition or acknowledgement of title, and does not constitute authority for the use of submerged lands unless herein provided and the necessary title or leasehold interests have been obtained from the State. Only the Trustees of the Internal Improvement Trust Fund may express State opinion as to title.

5. This permit does not relieve the permittee from liability for harm or injury to human health or welfare, animal, or plant life, or property caused by the construction or operation of this permitted source, or from penalties therefore; nor does it allow the permittee to cause pollution in contravention of Florida Statutes and Department rules, unless specifically authorized by an order from the Department.

6. The permittee shall properly operate and maintain the facility and systems of treatment and control (and related appurtenances) that are installed or used by the permittee to achieve compliance with the conditions of this permit, as required by Department rules. This provision includes the operation of backup or auxiliary facilities or similar systems when necessary to achieve compliance with the conditions of the permit and when required by Department rules.

GENERAL CONDITIONS:

7. The permittee, by accepting this permit, specifically agrees to allow authorized Department personnel, upon presentation of credentials or other documents as may be required by law and at a reasonable time, access to the premises, where the permitted activity is located or conducted to:

a. Have access to and copy any records that must be kept under the conditions of the permit;

b. Inspect the facility, equipment, practices, or operations regulated or required under this permit; and

c. Sample or monitor any substances or parameters at any location reasonably necessary to assure compliance with this permit or Department rules.

Reasonable time may depend on the nature of the concern being investigated.

8. If, for any reason, the permittee does not comply with or will be unable to comply with any condition or limitation specified in this permit, the permittee shall immediately provide the Department with the following information:

a. a description of and cause of non-compliance; and

b. the period of noncompliance, including dates and times; or, if not corrected, the anticipated time the non-compliance is expected to continue, and steps being taken to reduce, eliminate, and prevent recurrence of the non-compliance.

The permittee shall be responsible for any and all damages which may result and may be subject to enforcement action by the Department for penalties or for revocation of this permit.

9. In accepting this permit, the permittee understands and agrees that all records, notes, monitoring data and other information relating to the construction or operation of this permitted source which are submitted to the Department may be used by the Department as evidence in any enforcement case involving the permitted source arising under the Florida Statutes or Department rules, except where such use is prescribed by Sections 403.73 and 403.111, Florida Statutes. Such evidence shall only be used to the extent it is consistent with the Florida Rules of Civil Procedure and appropriate evidentiary rules.

10. The permittee agrees to comply with changes in Department rules and Florida Statutes after a reasonable time for compliance,

GENERAL CONDITIONS:

provided, however, the permittee does not waive any other rights granted by Florida Statutes or Department rules.

11. This permit is transferable only upon Department approval in accordance with Florida Administrative Code Rules 62-4.120 and 62-30.300, F.A.C., as applicable. The permittee shall be liable for any non-compliance of the permitted activity until the transfer is approved by the Department.

12. This permit or a copy thereof shall be kept at the work site of the permitted activity.

13. The permittee shall comply with the following:

a. Upon request, the permittee shall furnish all records and plans required under Department rules. During enforcement actions, the retention period for all records will be extended automatically unless otherwise stipulated by the Department.

b. The permittee shall hold at the facility or other location designated by this permit records of all monitoring information (including all calibration and maintenance records and all original strip chart recordings for continuous monitoring instrumentation) required by the permit, copies of all reports required by this permit, and records of all data used to complete the application for this permit. These materials shall be retained at least three years from the date of the sample, measurement, report, or application unless otherwise specified by Department rule.

c. Records of monitoring information shall include:

- the date, exact place, and time of sampling or measurements;
- the person responsible for performing the sampling or measurements;
- the dates analyses were performed;
- the person responsible for performing the analyses;
- the analytical techniques or methods used; and
- the results of such analyses.

14. When requested by the Department, the permittee shall within a reasonable time furnish any information required by law which is needed to determine compliance with the permit. If the permittee becomes aware that relevant facts were not submitted or were incorrect in the permit application or in any report to the Department, such facts or information shall be corrected promptly.

SPECIFIC CONDITIONS:

Construction Requirements

1. The construction of baghouse No. 1, duct system, pug mill filter receiver, clinker hopper filter receiver, material handling systems, and associated equipment shall conform to the plans in the application (Rule **62-4.070, F.A.C.**). **Except for the kiln burners, the liquid burnable material (LBM) regulated by 40 CFR 266, Subpart H, must be unloaded, stored, and transferred to the kilns in completely separate equipment than that used to handle LBM not regulated by 40 CFR 266, Subpart H.**

2. A programmable logic controller shall be installed for each kiln that will allow liquid burnable material (LBM) **regulated by 40 CFR 266, Subpart H,** to be burned only when all of the flue gas from the kiln passes through a kiln's baghouse (dust collector) and both the kiln and the baghouse are operating properly (Rule **62-4.070, F.A.C.**).

3. A Ramsey belt scale system (or equivalent) to measure the clay input shall be installed to determine the clay feed rate to each kiln while it is in service. Maximum error of the scale shall not exceed 2 percent. A front end loader at this facility shall be equipped with a scale that can be used to measure the production of any kiln (Rule **62-4.070, F.A.C.**).

4. The permittee shall install, calibrate, operate, and maintain sulfur dioxide, carbon monoxide, and oxygen continuous emission monitors that meet the applicable performance specifications listed in 40 CFR 60, Appendix B (July 1, 1993) on baghouse No. 1. Each kiln will have a recording pyrometer and its operation temperature shall be recorded anytime LBM **regulated by 40 CFR 266, Subpart H,** is used for fuel for the kiln (Rule **62-4.070, F.A.C.**).

5. The baghouses handling the kilns flue gasses shall be equipped with instruments that continuously record the pressure drop when the **baghouses** are in operation. The instruments shall be properly calibrated and maintained (Rule **62-4.070, F.A.C.**).

6. The stack serving baghouse No. 1 shall be equipped with sampling facilities that meet all specifications listed in Rule **62-297.345**, F.A.C.

7. The permittee shall install mercury emission control equipment within 12 months of being notified that Maximum Available Control Technology is applicable for this facility (Section 403.7895(4)(b)2, F.S.).

BEST AVAILABLE COPY

SPECIFIC CONDITIONS:

ALLOWABLE EMISSIONS

8. When baghouse No. 1 is serving kiln No. 5, the emissions shall not exceed any of the limits specified in permit No. AC 10-197099 that was issued for baghouse No. 5 on April 7, 1993. Maximum allowable emissions from either baghouse No. 1 or 5 while it is serving either kiln Nos. 1 or 1A shall not exceed any of the following:

Pollutant	Standard	Kiln 1*		Kiln 1A*	
		Lbs/hr	TPY	Lbs/hr	TPY
PM	0.08 gr/dscf @ 7% O_2	11.8	44.8	11.8	44.8
SO_2**	30 day average	84.0	319.2	75.8	288.0
NO_x		15.3	58.1	14.2	54.0
CO***	100 ppmvd @ 7% O_2	7.5	28.5	7.5	28.5
VOC	20 ppmvd	5.5	20.9	5.5	20.9
VE	15% opacity	15% opacity		15% opacity	

* 7,600 hrs/yr operation (Specific Condition No. 23 of permit No. AC 10-125262 for the construction of kiln No. 1A)
** 226 lbs SO_2/hr (1 hr. max)
(Rule 62-4.070, F.A.C. and 40 CFR 266)
***Alternate CO standard allowed (40 CFR 266)

When a scrubber is used to control the emissions from kilns 1 or 1A, all conditions of permit No. AC 10-125262 (including those on emissions, operation, monitoring, and reporting) apply.

9. Maximum allowable particulate matter emissions from other baghouses at this facility shall not exceed 5 percent opacity or 0.02 gr/dscf and:

Source	Particulate Matter Lbs/hr	TPY
Clay Fines Bin (existing)	0.14	0.6
Lime Bin (existing)	0.12	0.5
Pug Mill Filter Receiver (new)	0.1	0.4
Clinker Hopper Filter Receiver (new)	0.1	0.4

(Rule 62-297.340(3), F.A.C.)

BEST AVAILABLE COPY

SPECIFIC CONDITIONS:

10. The combined emissions of metals and other air pollutants from all sources at this facility shall not result in ambient air concentrations (predicted by Department approved modeling) that harm or injure human health or welfare, animal, plant, or aquatic life or property. This will be demonstrated by the permittee modeling the maximum emissions of the metals which could be emitted by this facility. This demonstration shall be made using the protocol in attachment 10 of the Air Construction Permit Application for kilns Nos. 1 and 1A. The modeling results must be approved by the Department. The tested emissions rate shall not exceed the maximum estimated rate that was used to show that ambient concentrations from this facility are less than the Department's annual Acceptable Ambient Concentrations.

Clay feed shall be sampled and analyzed weekly for the Boiler and Industrial Furnace (BIF) metals (40 CFR 261, Appendix 111, Table 2).

The maximum concentration of metals in the LBM to any kiln shall not exceed the concentration allowed under 40 CFR 266, Subpart H, or the following limits (whichever is more restrictive):

Metal	PPM (by weight)
Antimony	5,000
Arsenic	1,000
Barium	500,000
Beryllium	3,000
Cadmium	1,000
Chlorides	34,000
Chromium	10,000
Cr-6	1,000
Lead	50,000
Mercury	0.2
Nickel	5,000
Selenium	5,000
Silver	50,000
Sulfur	20,000
Thallium	1,000

The permittee shall document the concentration of polychlorinated biphenyls (PCB's), sulfur, chlorides and BIF metals in the LBM as fired in any kiln. **Each batch of LBM in the blend tanks shall be analyzed for PCB, sulfur, chlorides, and BIF metals. No LBM shall be transferred from the blend tanks to the burn tanks or kilns if any limit in this permit is exceeded.**

Section 403.161 F.S.

SPECIFIC CONDITIONS:

11. Lead emissions from Kiln Nos. 1 and 1A shall not exceed the lesser of 1.9 lbs/hr or one-third of the emissions allowed under the BIF Rule (40 CFR 266.106(d)), whichever is more restrictive. (January 23, 1993, Settlement Agreement for kiln No. 5).

12. The LBM, as burned, shall not contain mercury at concentrations greater than 0.2 mg/l or the concentration allowed under 40 CFR 266, Subpart H, whichever is more restrictive. The permittee shall confirm that the LBM, as burned, does not contain mercury in excess of the most restrictive concentration by sampling and analysis for mercury as required by the BIF Rule (40 CFR 266, Subpart H). The Permittee may burn LBM containing mercury at concentrations greater than 0.2 mg/l only to the extent necessary during stack testing for the purpose of demonstrating BIF Rule compliance, so long as **the Department** and/or U.S. EPA have been notified (January 23, 1993, Settlement Agreement for kiln No. 5).

13. The operation of this facility shall not result in the emissions of air pollutants which cause or contribute to an objectionable odor. (Rule **62-296.320, F.A.C.**).

14. Reasonable precautions shall be used to minimize unconfined emissions of particulate matter generated by this operation pursuant to Rule **62-296.310(3)**. Reasonable precautions shall be defined as the application of dust suppressants to the material/operation listed in the following table when the visible emissions (maximum 6 minute rolling average) exceed the listed opacity:

Material/Operation	Visible Emissions (Opacity)
Raw Clay Feed Area	5
Coal Storage Area and Coal Handling Equipment	10
Discharges of Product from the Kiln into the Product Cooler	10
Handling and Storage of the Product	20

Also, particulate matter collected by the baghouses shall be managed in enclosed tanks, containers, or conveyances so that it is shielded from wind and rain and shall not be placed on the ground prior to its use as a raw material or its incorporation into the aggregate product or its permitted disposal at a facility authorized to handle this material (Rule **62-296.310(3), F.A.C.**).

SPECIFIC CONDITIONS:

Operation Requirements

15. Operation of kiln No. 5 with baghouse No. 1 is subject to all conditions in permit No. AC 10-197099 (construction permit for baghouse No. 5) or a valid air operation permit issued pursuant to this permit (Rule **62-4.160, F.A.C.**).

16. If a kiln is not burning LBM **subject to 40 CFR 266, Appendix H,** the emissions may be controlled with its scrubber provided emissions/operations of the kiln/scrubber meet all conditions of the permit **No. AC 10-125262** and the air regulations (Rule **62-4.070, F.A.C.**).

17. Kilns Nos. 1 and 1A shall not be in service at the same time. (Application)

18. Each baghouse **or scrubber** may only control the emissions from one kiln at a time. (Application)

19. Kilns Nos. 1 and 1A may operate 24 hrs/day, 7 days/week, 52 weeks/year but not over 7,600 hours during any calendar year. (Specific Condition No. 23 of permit No. AC 10-125262 issued January 15, 1987, for the construction of kiln No. 1A)

20. Maximum clay input to kilns 1 or 1A shall not exceed 14.4 TPH (wet) or 8.6 TPH (dry). Admixture (hydrated lime or crushed dolomitic limestone) input shall not exceed **800** lbs/hr. Production shall not exceed 7.0 TPH (dry). (Application)

21. The maximum allowable sulfur content of the fuels and the heat input to kilns Nos. 1 and 1A shall not exceed any of the following:

KILN	MMBTU/HR*	MMBTU/TON PRODUCT	LBM**(GPH)	COAL***(TPH)	NO. 2 OIL****(GPH)	PROPANE(GPH)	NAT. GAS (MMCFH)
1	47.6	6.8	476	1.3	340	520	0.05
1A	47.6	6.8	476	2.0	340	520	0.05

*When fuels are burned in combination, the maximum allowable heat input and sulfur dioxide emission limits for the kiln shall not be exceeded

**Maximum sulfur content of any LBM is 2.0 percent, 0.4 percent (30 day average).

***Maximum sulfur content of the coal is 1.5 percent

****Maximum sulfur content of the No. 2 oil is 0.5 percent and 0.3 percent, annual average.

(Application, existing permits, and F.A.C. Rule 62-4.070)

22. Oldover Corporation, or another facility permitted to manage hazardous waste under the provisions of 40 CFR 260 through 40 CFR 270, must supply all LBM **regulated by 40 CFR 266, Subpart H,** to

SPECIFIC CONDITIONS:

Florida Solite Company. **Only LBM not regulated by 40 CFR 266, Subpart H, may be handled in separate equipment at this facility.** The permittee is responsible for the LBM meeting all the requirements of this permit and all applicable state, federal, and local regulations. The LBM shall not contain any hazardous waste that is listed for dioxin or derived from the dioxin-listed wastes F020, F021, F022, F023, F026, or F027, as specified in 40 CFR 261, Subpart H, organic cyanides, sulfide, mercaptans, insecticides, pesticides, herbicides, electroplating waste, or radioactive material **regulated by Florida's Department of Health and Rehabilitative Services.** The LBM can contain up to 5.0 ppm polychlorobiphenyls (PCB) provided all applicable requirements listed in 40 CFR 761 (July 1, 1992) are met. In addition to those conditions required by 40 CFR 761.20, the permittee shall document that the LBM contains less than 5.0 ppm of PCB and has not been mixed with materials containing PCBs in concentrations of 50 ppm or greater. The LBM shall be tested for PCBs by Methods 3665/8080 as described in SW-846, 3rd Edition (1986), update 2 (Nov. 1992), and radioactivity prior to acceptance at the facility. The permittee shall retain the manifest of each LBM shipment or load for 3 years for Department inspection. (January 23, 1993, Settlement Agreement for kiln No. 5).

23. When burning LBM **regulated by 40 CFR 266, Subpart H,** in any kiln at this facility, the kiln baghouse inlet temperature, carbon monoxide, sulfur dioxide, and oxygen concentration of the flue gas shall be continuously monitored downstream of the furnace but prior to release to the atmosphere in the manner prescribed by the Boiler and Industrial Furnace Rule (40 CFR 266, Subpart H **and Appendix IX**). The kiln shall operate at a minimum temperature of 1800°F and at a minimum oxygen level of 6 percent, and a maximum flue gas temperature at the baghouse inlet of 450° F. The concentration of CO in the stack gases shall not exceed a maximum of 100 ppmv on an hourly rolling average basis, corrected to 7% oxygen, unless the permittee complies with the alternative carbon monoxide and hydrocarbon standard prescribed by 40 CFR 266.104(c) and (f) while using a continuous hydrocarbon analyzer. (40 CFR 266, Subpart H)

24. Kiln Nos. 1 and 1A shall achieve a minimum destruction and removal efficiency (DRE) of 99.99% for all organic hazardous constituents when burning LBM **regulated by 40 CFR 266, Subpart H.** Compliance with this requirement shall be demonstrated as required by 40 CFR 266.104(a).

Compliance Testing

25. Testing of emissions shall be conducted with the source operating at permitted capacity. Permitted capacity is defined as

SPECIFIC CONDITIONS:

90-100 percent of the maximum operating rate allowed by the permit. If it is impracticable to test at permitted capacity, then sources may be tested at less than capacity; in this case subsequent source operation is limited to 110 percent of the test load until a new test is conducted. Once the unit is so limited, then operation at higher capacities is allowed for no more than 15 consecutive days for the purposes of additional compliance testing to regain the permitted capacity in the permit. (Rule 62-297.310, F.A.C.)

26. Each kiln, No. 1 and No. 1A, shall be tested at a feed rate of 7.7 to 8.6 TPH clay (dry) and 720 to 800 lbs/hr admixtures input within 30 days of placing each kiln into service with baghouse No. 1 or No. 5 for the following pollutants:

Pollutant	Method* (40 CFR 60, Appendix A, 7/1/91)	Frequency	Comments**
PM	5	Annually	While burning coal or LBM
SO_2	6, 6C	Annually	While burning coal or LBM
NOx	7E	Every 5 yrs	
VE	9	Annually	While burning coal or LBM
VOC	25	Every 5 yrs	While burning LBM
BIF Metals	EPA Multi/-Metal sampling train	Annually	While burning LBM subject to 40 CFR 266
Organic***	VOST	Annually	While burning LBM subject to 40 CFR 266. Analyze by Method 8240 of SW-846

* Or other methods with DEP approval.
** Annual stack tests shall be conducted on the kiln baghouses Nos. 1 and 5. The specified tests must be conducted while the plant is burning any fuel that has been used for more than 400 hours during the preceding 12 months. Tests shall be conducted on any air pollution control system that is used more than 400 hours during any year following initial testing of the baghouses.
*** Analyze for all volatile organic constituents listed in Method 8240. (Chapter 62-297, F.A.C.)

Administrative Requirements

27. Stack test reports which include the emissions, raw material feed rates, fuel type and rate, and clay/fuel analyses shall be

SPECIFIC CONDITIONS:

submitted to the Northeast District office within 45 days of the test. (Rule 62-297.570, F.A.C.)

28. When the Department, after investigation, has good reason (such as complaints, increased visible emissions, or questionable maintenance of control equipment) to believe that any applicable emission standard contained in this permit is being violated, it may require the owner or operator of the unit to conduct compliance tests which identify the nature and quantity of pollutant emissions from the source and to provide a report on the results of said tests to the Department. (Rule 62-297.340(2), F.A.C.)

29. The Northeast District office shall be notified in writing a minimum of 15 days in advance of any compliance tests to be conducted on this source. (Rule 62-297.340(1)(i), F.A.C.)

30. Nothing in this permit shall exempt the permittee from the requirements of 40 CFR 761, Polychlorinated Biophenyls, 40 CFR 266, Subpart H, Hazardous Waste Burned in Boilers and Industrial Furnaces, and Chapter 62-730, F.A.C., Hazardous Waste, or any other requirement outside the purview of the Department's air regulation (Chapters 62-296 and 297, F.A.C.). The permittee shall obtain such state and federal permits, when applicable, pursuant to any hazardous waste regulation. (Rule 62-4.160, F.A.C.)

31. The permittee, for good cause, may request that this construction permit be extended. Such a request shall be submitted to the Bureau of Air Regulation at least 60 days prior to the expiration of the permit (Rule 62-4.090, F.A.C.).

32. An application for an operation permit must be submitted to the Northeast District office at least 90 days prior to the expiration date of this construction permit. To properly apply for an operation permit, the applicant shall submit the appropriate application form, fee, certification that construction was completed noting any deviations from the conditions in the construction permit, and compliance test reports as required by this permit (Rules 62-4.055 and 62-4.220, F.A.C.). Any operating permit issued shall require an annual operation report be submitted by March 1 of each year. (Rule 62-4.070, F.A.C.)

STATE OF FLORIDA DEPARTMENT
OF ENVIRONMENTAL PROTECTION

_____
Virginia B. Wetherell, Secretary

Best Available Copy

RECEIVED
SEP 1 1994
Bureau of
Air Regulation

KOOGLER & ASSOCIATES
ENVIRONMENTAL SERVICES
4014 NW THIRTEENTH STREET
GAINESVILLE, FLORIDA 32609
904/377-5822 ▪ FAX 377-7158

KA 150-90-07

August 31, 1994

Mr. John C. Brown, Jr.
Florida Department of
Environmental Protection
Twin Towers Office Building
2600 Blair Stone Road
Tallahassee, FL 32399-2400

Subject: Additional Comments on Draft Permit for Kilns 1/1A
Florida Solite Company
Permit No. AC10-222486

Dear Mr. Brown:

The following information is submitted in support of comments previously submitted by Florida Solite on July 5, 1994, regarding the draft permit for Kilns 1/1A.

In the initial comments, it was requested that the permit clarify that requirements in the draft permit pertaining to LBM are applicable to hazardous waste-derived fuel, or hazardous LBM, not to non-hazardous LBM. Florida Solite receives, stores, and feeds non-hazardous LBM via pipeline to kiln burners. Oldover Corporation receives, stores and supplies the hazardous LBM to the Florida Solite kiln burners using completely separate unloading facilities, storage tanks, and pipelines. The non-hazardous LBM does not come into contact with hazardous LBM. The only equipment shared by the two types of LBM is the common kiln burner (two separate pipes tie into the burner). Also, Florida Solite maintains separate logs for the two types of LBM burned. As the two LBM systems are independent and tracked separately, it is requested that the permit distinguish between the hazardous and non-hazardous LBM used at Florida Solite.

If you have any questions, please do not hesitate to call me.

Very truly yours,

KOOGLER & ASSOCIATES

John B. Koogler, Ph.D., P.E.

JBK:par

c: Mr. J. Braswell, OGC, FDEP
Mr. W. Congdon, OGC, FDEP
Mr. T. Saunders, Solite
Mr. A. Galliano, Solite
Mr. J. Kopelousos
Mr. S. Holt, Solite
Mr. J. Jewett, Solite
Mr. G. Eure, Solite
Mr. T. Maurer, Foley & Lardner
A. Nanta
G. Cole, NE Dist

Best Available Copy

SOLITE® CORPORATION

P. O. BOX 27211 ◦ RICHMOND ◦ VIRGINIA 23261 ◦ PHONE AREA CODE 804 321-6761

Patty ~~AIR RES~~ Claire Howard 8/19

August 16, 1994

RECEIVED
AUG 19 1994
Division of Air Resources Management

RECEIVED
AUG 22
Bureau of Air Regulation

VIA CERTIFIED MAIL -
RETURN RECEIPT REQUESTED

Virginia B. Wetherell, Secretary
Florida Department of Environmental Protection
Twin Towers Office Building
2600 Blair Stone Road
Tallahassee, FL 32399-2400

Re: In the Matter of an Application for Permit by Florida Solite Company, DEP File No. AC 10-222486, Clay County

Dear Secretary Wetherell:

I am writing on behalf of Florida Solite Company to request, pursuant to F.A.C. Section 17-103.070, a further extension of time until November 15, 1994 to file for an administrative proceeding seeking modification of the above-referenced permit.

This extension is necessary to allow the applicant, Florida Solite Company, to continue to consult with Department staff for the purpose of attempting to clarify certain conditions of proposed Permit No. AC 10-222486.

Sincerely,

J. J. Jewett, III
Vice President
Legal and Regulatory Affairs

c: Mr. William Congdon, Office of General Counsel
C. H. Fancy, P.E., Bureau of Air Regulation
Preston Lewis, Bureau of Air Regulation
Chris Kirts, NED
John Koogler, P.E., Koogler & Associates
Thomas A. Maurer, Esq., Foley & Lardner

DEPARTMENT OF
ENVIRONMENTAL PROTECTION

AUG 18 1994

OFFICE OF THE SECRETARY

"Printed on Recycled Paper"

Best Available Copy

FLORIDA SOLITE® COMPANY

P. O. BOX 297 • GREEN COVE SPRINGS • FLORIDA 32043 AREA CODE 904 284-9271

RECEIVED
JUL 18 1994
Bureau of
Air Regulation

July 12, 1994

Ms. Patty Adams
Florida Department of Environmental Protection
Bureau of Air Regulation
2600 Blair Stone Road
Tallahassee, Fl. 32399-2400

Re: Florida Solite Company
Permit No. AC 10-222486
Clay County
Green Cove Springs, Fl. 32043

Dear Sir,

Please find enclosed another copy of the Proof of Publication. It was brought to my attention that the previous copy did not copy properly.

Please contact me at (904) 284-9271 if you have questions.

Sincerely,

Albert Galliano

Printed on Recycled Paper

PUBLISHER'S AFFIDAVIT

Clay Today

Published Daily Except Sunday and Monday
Orange Park, Florida

STATE OF FLORIDA
COUNTY OF CLAY:

Before the undersigned authority personally appeared Carl Ferrer, wh oath says that he is the Publisher of the "Clay Today," a newspaper pul daily except Sundays and Mondays at Orange Park in Clay County, F that the attached copy of advertisement being a

"Notice of Intent"

in the matter of The Department of Environmental Protectio gives notice of its intent to issue an air permit to Florida Solite Company.

LEGAL NUMBER 1333

as published in said newspaper in the issues of June 29, 1994.

Affiant further says that said "Clay Today" is a newspaper published at Orange Park, in said Clay County, Florida and that the said newspaper has heretofore been continuously published in said Clay County, Florida, each day except Sunday and Monday, and has been entered as second class mail matter at the post office in Orange Park, in said Clay County, Florida for a period of one year next preceding the first publication of the attached copy of advertisment; and affiant further says that he has neither paid nor promised any person, firm or corporation any discount, rebate, commission or refund for the purpose of securing this advertisement for publication in the said newspaper.

Sworn to and subscribed
before me this 29th day of June A.D. 1994

NOTARY PUBLIC, STATE OF FLORIDA

Sylvia T. Lloyd
Notary Public, State of Florida
Commission No. CC 379418
My Commission Expires 06/06/98
1-800-3-NOTARY - Fla. Notary Service & Bonding Co.

P.O. Box 1209, 1564 Kingsley Avenue • Orange Park, Florida 32073
Telephone (904)264-3200

STATE OF FLORIDA
DEPARTMENT OF
ENVIRONMENTAL
PROTECTION
NOTICE OF INTENT TO
ISSUE PERMIT

The Department of Environmental Protection gives notice of its intent to issue an air permit to Florida Solite Company, P. O. Box 297, Green Cove Springs, Florida 32043. The permit will authorize the construction of a new baghouse (dust collector), duct system, and associated equipment that will allow any of the three lightweight aggregate kilns (Nos. 1, 1A, and 5) at this facility to discharge through the new baghouse or the existing baghouse that now serves kiln No., 5. They will also install a new pug mill filter receiver and a clinker hopper filter receiver to handle the particulate matter captured by the baghouses. The kilns are located at the applicant's facility on County Road 209A, north of Green Cove Springs, Clay County, Florida. There will be no change in the quantity of fuel used and light aggregate manufactured by this facility. The uncontrolled emissions from the kilns are not changed by the proposed equipment. The baghouses shall be used on any kiln burning liquid burnable material (LBM). The use of these baghouses along with the liming system will be a benefit to the environment because they have the potential to reduce particulate matter and sulfur dioxide emissions. The existing kiln scrubbers may be retained as an alternate air pollution control device and used on any kiln that is not burning LBM. Maximum emissions from neither kiln No. 1 or No. 1A will not exceed: 11.8 lbs/hr (44.8 TPY) particulate matter; 226 lbs/hr for a maximum of 1 hour and 84.0 lbs/hr for a 30-day average (319.2 TPY) sulfur dioxide; 5.5 lbs/hr (20.9 TPY) volatile organic compounds, and 15.3 lbs/hr (58.1 TPY) nitrogen oxides. The particulate matter emissions from the pug mill filter receiver and the clinker hopper filter receiver are estimated to be 0.1 lbs/hr and 0.4 TPY each. Particulate matter emissions from the clay fines bin are estimated to be 0.14 lbs/hr and 0.6 TPY. The allowable emissions from kiln No. 5 are specified in permit No. AC 10-197099 for baghouse No. 5 (issued April 7, 1993). A determination of Best Available Control Technology (BACT) was not required. The Department is issuing this intent to issue for the reasons stated in the Technical Evaluation and Preliminary Determination.

A person whose substantial interests are affected by the Department's proposed permitting decision may petition for an administrative proceeding (hearing) in accordance with section 120.57, Florida Statutes. The petition must contain the information set forth below and must be filed (received) in the Office of General Counsel of the Department at 2600 Blair Stone Road, Tallahassee, Florida 32399-2400, within 14 days of publication of this notice. Petitioner shall mail a copy of the petition to the applicant at the address indicated above at the time of filing. Failure to file a petition within this time period shall constitute a waiver of any right such person may have to request an administrative determination (hearing) under Section 120.57, Florida Statutes.

The Petition shall contain the following information; (a) The name, address, and telephone number of each petitioner, the applicant's name and address, the Department Permit File Number and the county in which the project is proposed; (b) A statement of how and when each petitioner received notice of the Department's action or statement of the material facts disputed by Petitioner, if any; (e) A statement of facts which petitioner contends warrant reversal or modification of the Department's action or proposed action; (f) A statement of which rules or statutes petitioner contends require reversal or modification of the Department's action or proposed action; and (g) A statement of the relief sought by petitioner, stating precisely the action petitioner wants the Department to take with respect to the Department's action or proposed action.

If a petition is filed, the administrative hearing process is designed to formulate agency action. Accordingly, the Department's final action may be different from the position taken by it in this Notice. Persons whose substantial interests will be affected by any decision of the Department with regard to the application have the right to petition to become a party to the proceeding. The petition must conform to the requirements specified above and be filed (received) within 14 days of publication of this notice in the Office of General Counsel at the above address of the Department. Failure to petition within the allowed time frame constitutes a waiver of any right such person has to request a hearing under Section 120.57, F.S., and to participate as a party to this proceeding. Any subsequent intervention will only be at the approval of the presiding officer upon motion filed pursuant to Rule 28-5.207, F.A.C.

The application is available for public inspection during normal business hours, 8:00 a.m. to 5:00 p.m., Monday through Friday, except legal holidays, at:
Department of Environmental Protection
Bureau of Air Regulation
111 S. Magnolia Drive, Suite 4
Tallahassee, Florida 32301
Department of Environmental Protection
Northeast District
7825 Baymeadows Way, Suite B200
Jacksonville, Florida 32256-7577

Any person may send written comments on the proposed action to Mr. Preston Lewis at the Department of Environmental Protection, Mail Station 5505, 2600 Blair Stone Road, Tallahassee, Florida 32399-2400. All comments received within 14 days of the publication of this notice will be considered in the Department's final determination.

Legal No 1333 Published June 29, 1994 in Clay County's daily Clay Today Newspaper.

FLORIDA SOLITE® COMPANY

P. O. BOX 297 ∘ GREEN COVE SPRINGS ∘ FLORIDA 32043 AREA CODE 904 284-9271

RECEIVED
JUL 11 1994
Bureau of Air Regulation

RECEIVED
JUL 1
Bureau of Air Regulation

July 6, 1994

CERTIFIED: Return Receipt
P 331 006 870

Florida Department of Environmental Protection
Bureau of Air Regulation
2600 Blair Stone Road
Tallahassee, Fl. 32399-2400

Re: Florida Solite Company
Permit No. AC 10-222486
Clay County
green Cove Springs, Fl. 32043

Dear Sir,

Please find enclosed a the copy of the Proof of Publication as requested for the above referenced permit.

Please contact me at (904) 284-9271 if you have questions.

Sincerely,

Albert Galliano

Printed on Recycled Paper

FLORIDA SOLITE® COMPANY

P. O. BOX 297 ○ GREEN COVE SPRINGS ○ FLORIDA 32043

UNITED STATES POSTAL SERVICE

0000

PAID
JACKSONVILLE, FL
32205
JUL 06 '94
AMOUNT

$2.29
00021999-10

Fl. Dept. of Envir. Protection
Bureau of Air Regulations
2600 Blair Stone Rd.
Tallahassee, Fl. 32399-2400

Fold at line over top of envelope to the right of the return address

CERTIFIED

P 331 006 870

MAIL

RETURN RECEIPT REQUESTED

Printed on Recycled Paper

PUBLISHER'S AFFIDAVIT

Clay Today

Published Daily Except Sunday and Monday
Orange Park, Florida

STATE OF FLORIDA
COUNTY OF CLAY:

Before the undersigned authority personally appeared Carl Ferrer, who on oath says that he is the Publisher of the "Clay Today," a newspaper published daily except Sundays and Mondays at Orange Park in Clay County, Florida; that the attached copy of advertisement being a

"Notice of Intent"

in the matter of The Department of Environmental Protection gives notice of its intent to issue an air permit to Florida Solite Company.

LEGAL NUMBER 1333

was published in said newspaper in the issues of

June 29, 1994

Affiant further says that said "Clay Today" is a newspaper published at Orange Park, in said Clay County, Florida and that the said newspaper has heretofore been continuously published in said Clay County, Florida, each day except Sunday and Monday, and has been entered as second class mail matter at the post office in Orange Park, in said Clay County, Florida for a period of one year next preceding the first publication of the attached copy of advertisment; and affiant further says that he has neither paid nor promised any person, firm or corporation any discount, rebate, commission or refund for the purpose of securing this advertisement for publication in the said newspaper.

Sworn to and subscribed
before me this 29th day of June A.D. 1994

NOTARY PUBLIC, STATE OF FLORIDA

Sylvia T. Lloyd
Notary Public, State of Florida
Commission No. CC 379418
My Commission Expires 06/06/98
1-800-3-NOTARY - Fla. Notary Service & Bonding Co.

P.O. Box 1209, 1564 Kingsley Avenue • Orange Park, Florida 32073
Telephone (904)264-3200

will be no change in the

ED
NOON
Garage
Sale Ads
5 lines,
3 days
$9.00

LEGAL DOCUMENTS PREPARED
Divorce * Wills
Bankruptcy * Incorpor.
Adoptions * Deeds
Helping Hands Paralegal Services, Inc.

clinker hopper filter receiver are estimated to be 0.1 lbs/hr and 0.4 TPY each. Particulate matter emissions from the clay fines bin are estimated to be 0.14 lbs/hr and 0.6 TPY. The allowable emissions from kiln No. 5 are specified in permit No. AC 10-197099 for baghouse No. 5 (issued April 7, 1993). A determination of Best Available Control Technology (BACT) was not required. The Department is issuing this Intent to Issue for the reasons stated in the Technical Evaluation and Preliminary Determination.

A person whose substantial interests are affected by the Department's proposed permitting decision may petition for an administrative proceeding (hearing) in accordance with section 120.57, Florida Statutes. The petition must contain the information set forth below and must be filed (received) in the Office of General Counsel of the Department at 2600 Blair Stone Road, Tallahassee, Florida 32399-2400, within 14 days of publication of this notice. Petitioner shall mail a copy of the petition to the applicant at the address indicated above at the time of filing. Failure to file a petition within this time period shall constitute a waiver of any right such person may have to request an administrative determination (hearing) under Section 120.57, Florida Statutes.

The Petition shall contain the following information; (a) The name, address, and telephone number of each petitioner, the applicant's name and address, the Department Permit File Number and the county in which the project is proposed; (b) A statement of how and when each petitioner received notice of the Department's action or proposed action; (c) A statement of how each petitioner's substantial interests are affected by the Department's action or proposed action; (d) A statement of the material facts disputed by Petitioner, if any; (e) A statement of facts which petitioner contends warrant reversal or modification of the Department's action or proposed action; (f) A statement of which rules or statutes petitioner contends require reversal or modification of the Department's action or proposed action; and (g) A statement of the relief sought by petitioner, stating precisely the action petitioner wants the Department to take with respect to the Department's action or proposed action.

If a petition is filed, the administrative hearing process is designed to formulate agency action. Accordingly, the Department's final action may be different from the position taken by it in this Notice. Persons whose substantial interests will be affected by any decision of the Department with regard to the application have the right to petition to become a party to the proceeding. The petition must conform to the requirements specified above and be filed (received) within 14 days of publication of this notice in the Office of General Counsel at the above address of the Department. Failure to petition within the allowed time frame constitutes a waiver of any right such person has to request a hearing under Section 120.57, F.S., and to participate as a party to this proceeding. Any subsequent intervention will only be at the approval of the presiding officer upon motion filed pursuant to Rule 28-5.207, F.A.C.

The application is available for public inspection during normal business hours, 8:00 a.m. to 5:00 p.m., Monday through Friday, except legal holidays, at:

Department of Environmental Protection
Bureau of Air Regulation
111 S. Magnolia Drive, Suite 4
Tallahassee, Florida 32301

Department of Environmental Protection
Northeast District
7825 Baymeadows Way, Suite B200
Jacksonville, Florida 32256-7577

Any person may send written comments on the proposed action to Mr. Preston Lewis at the Department of Environmental Protection, Mail Station 5505, 2600 Blair Stone Road, Tallahassee, Florida 32399-2400. All comments received within 14 days of the publication of this notice will be considered in the Department's final determination.

Legal No 1333 - Published June 29, 1994 in Clay County's daily Clay Today Newspaper.

Florida Dept. of Environmental Protection
Office of General Counsel
2600 Blair Stone Road
Tallahassee, FL. 32399-2400

July 9, 1994
Julie Hellmuth
1205 Orange Circle N
Orange Park,Fl.32073
(904) 269-5909

RE: Department Permit File No. AC 10-222486 Clay County
Florida Solite Company
P.O. Box 297
Green Cove Springs, FL. 32043
Facility located off of 209B near Green Cove Springs

In accordance with Section 120.57, Florida Statutes, I petition for an administrative hearing on the above permit No. AC 10-222486 to authorize the construction of a new baghouse ,duct system, and associated equipment that will allow any of the three lightweight aggregate kilns at this facility to discharge through the new baghouse or the existing baghouse that now serves kiln No. 5 .

I received notice of the Department's proposed action through the Legal Notice No.1333 published June 29, 1994 in Clay Today Newspaper

Petitioner is the mother of a 6 year old daughter, lives in Clay County with her husband and daughter, has family property just North of Green Cove Springs, enjoys boating on Black Creek and the St. Johns River, eats shrimp caught in the St. Johns River near Black Creek, breathes the air and drinks the water in Clay County and therefore has a substantial interest in the air and water quality of Clay County. The applicant's proposed construction of a new baghouse and the handling of the particulate matter captured by the baghouses at the Florida Solite site will substantially, materially, and adversely affect and injure the air and water quality of Clay County.

With her 6 year old daughter, Petitioner has a special interest in the air and water quality of Clay County as small children are at greater risk than adults to the buildup of toxic materials such as lead in their tissue. Being a woman, Petitioner also has a special interest because of recent findings published in the Florida Times Union linking breast cancer to PCB's in the breast tissue and the soon to be released reassessment of the dangers of Dioxins and Furans by the E.P.A. showing that these materials are even more dangerous than originally thought .

Petitioner alleges that the proposed permit must be denied because the standards for issuing the permit under Rule 17-4.070, Florida Administrative Code have not been met. Under this rule, the Applicant must provide reasonable assurance based on plans, test results, installation of tested pollution control measures, or other information that the project will not contravene DEP standards or rules. In fact, the Applicant's permit application is inadequate, incomplete, and fails to provide reasonable assurance that the changes proposed will be in accord with all applicable

rules and laws, and must be denied in accordance with Rule 17-4.070(2), Florida Administrative Code.

The proposed permit is inadequate, incomplete and contradictory on the following points:

1. The legal notice states "The use of these baghouses along with the liming system will be a benefit to the environment because they have the potential to reduce particulate matter and sulfur dioxide emissions." While it is true that these two pollutants will be reduced, there will be other pollutants that may increase and in the overall picture, compromise the environment.

2. The legal notice also states "The particulate matter emissions from the pug mill filter receiver and the clinker hopper filter receiver are estimated to be 0.1 lbs/hr and 0.4 TPY ". The Technical Evaluation states in the 6th paragraph under section III "All material captured by the baghouses is incorporated into the product". Could this material which now contains heavy metals, etc. be introduced back into the kiln and contaminate these emissions from the pug mill filter receiver or the clinker hopper filter receiver? There is no indication from the permit what the expected concentration of pollutants will be in these particulate matter emissions.

3. The permit states on the bottom of Page 9 "Also , particulate matter collected by the baghouses shall be managed in enclosed tanks, containers, or conveyances so that it is shielded from wind and rain and shall not be placed on the ground prior to its use as a raw material or its incorporation into the aggregate product or its permitted disposal at a facility authorized to handle this material (F.A.C. Rule 17-296.310(3))." This sentence is completely inadequate in determining how to handle this ash from the baghouse to insure public health and especially the worker's health. The recent supreme court ruling that the fly ash from garbage incinerators must be tested separately before it is mixed with any bottom ash and if it tests hazardous, must be kept separate and disposed of as hazardous waste, should apply here as well. The particulate matter collected by these baghouses will contain heavy metals, etc. and should be tested before being mixed with anything else. In fact, if the ash is mixed with the aggregate product, it will not be protected from wind and rain as required before mixing and there is no evidence that it will not run off from rain or be blown by the wind after it is mixed with the aggregate product.

4. The Technical Evaluation states in the 11th paragraph under section III " Kilns Nos. 1, 1A, and 5 will also emit some of the metals contained in the liquid burnable fuel (LBM). The applicant has not been required to measure the current metal emissions. ". A specific condition of the proposed permit restricts toxic pollutant emissions "to a level that will not endanger the health of the public". The proposed permit does not even give estimated emission levels for heavy metals, dioxins, furans, etc. and therefore cannot judge if this baghouse should be designed around some other control technology like activated carbon injection.

5. The permit allows for Kilns 1 and 1A to meet less stringent pollution control levels than Kiln 5. This is not only impractical from an operations standpoint, it does not make sense to allow Solite to pick which kiln to burn in and therefore circumvent the more stringent controls forced on Kiln 5 and Baghouse 5. All kilns and baghouses should meet the more stringent requirement of Kiln 5 and Baghouse 5.

6. Solite has not been able to burn hazardous waste for over two years now, so this permit to allow Solite to start burning hazardous waste in Kilns 1 and 1A should require a Certification of Need according to Section 403.7895(3) F.S. This has not been done.

7. The Technical Evaluation states in the 2nd paragraph under section V."The determination on the applicability of the requirements for the Permitting of Commercial Hazardous Waste Incinerators, Section 403.7869, Florida Statues, is based on legal and not technical considerations." This is an affront to every citizen in Clay County and the State of Florida. To admit that technically this is a commercial hazardous waste incinerator and that the more stringent requirements of Section 403.7869 will not apply because of some legal loop hole is unbelievable and unacceptable. Correspondence from employees in D.E.P. has shown that they have called these kilns hazardous waste incinerators and that is exactly what they are when burning LBM . The stricter requirements of a commercial hazardous waste incinerator must be applied to all the kilns at Solite when burning LBM .

Therefore, I request that the D.E.P. deny this permit until such time that all the inadequate, incomplete, and contradictory points mentioned above are resolved.

I am requesting an administrative proceeding to be sure that these points are resolved and the proper permit is written.

Sincerely,

Julie Hellmuth

Julie Hellmuth

c.c. Florida Solite

PETITION FOR ADMINISTRATIVE PROCEEDING

RECEIVED
JUL 13 1994
DEPARTMENT OF
ENVIRONMENTAL PROTECTION
OFFICE OF GENERAL COUNSEL

HAND DELIVERED

Florida Department of Environmental Protection
Office of General Counsel
2600 Blair Stone Road
Tallahassee, FL 32399-2400

Re: Notice of Intent to Issue Air Permit
By Florida Department of Environmental Protection ("DEP")
To Applicant Florida Solite Company
DEP Permit File No. AC 10-222486

Pursuant to section 120.57, Florida Statutes, I petition for an administrative proceeding for DEP Permit File No. AC 10-222486. I provide the following required information:

1. My name and address are Stewart Harris, P.O. Box 702, 1752 County Road 315, Green Cove Springs, FL 32043. My telephone number is (904) 284-3367.

2. The applicant's name and address are Florida Solite Company ("Florida Solite"), P.O. Box 297, Green Cove Springs, FL 32043. The DEP Permit File No. is AC 10-222486. The proposed project is located in Clay County, Florida.

3. I received notice of DEP's proposed action on June 29, 1994, by means of Legal Notice No. 1333, published in the *Clay Today* Newspaper on June 29, 1994.

4. My substantial interests are affected by DEP's proposed action. Specifically, my health and the health of my family as well the value of my property are substantially affected by the emissions and discharges caused by the operation of the Florida Solite facility. I have two small children: one is four years old and the other is only nine months old. My family and I live and own property approximately three miles from the Florida

Solite installation. Our home has well water. We eat and drink food products from this area. We have an outside swimming pool. We regularly drive in this area.

5. I dispute the alleged fact that the proposed baghouse or associated filter receivers and other equipment will be a benefit to the environment.

6. Reversal or modification of DEP's action is warranted for several reasons. First, Florida Solite has not affirmatively provided DEP with reasonable assurances that this proposed construction "will not discharge, emit, or cause pollution in contravention of [DEP] standards or rules" as required by Rule 17-4.070, Florida Administrative Code.

Second, DEP has apparently not taken into consideration Florida Solite's long and distinguished record of serious environmental violations at its installation as also required by Rule 17-4.070, Florida Administrative Code. This record includes water quality violations, air quality violations, and noncompliance with permit monitoring requirements.

Third, Florida Solite, "a commercial hazardous waste incinerator," has not provided the certificate of need or the cumulative impact analysis as required by section 403.7895, Florida Statutes.

Fourth, the current draft of the Dioxin Reassessment Report being promulgated by the United States Environmental Protection Agency ("EPA") finds that dioxin and related compounds adversely affect human health at very low levels. Dioxins and furans have

been found in samples of cement kiln dust taken from cement kilns (some of which burned hazardous waste and some of which did not).

Fifth, in City of Chicago v Environmental Defense Fund, 62 U.S.L.W. 4283 (U.S., 1994), the United States Supreme Court ruled that certain household-waste ash was hazardous waste. Under the analysis of City of Chicago, the ash produced by cement kilns such as the Florida Solite installation should also be designated hazardous waste and treated accordingly.

7. Reversal or modification of DEP's proposed action is required by Rule 17-4.070, Florida Administrative Code; section 403.7895, Florida Statutes; and the recent Supreme Court case, City of Chicago v Environmental Defense Fund.

8. I ask DEP to reverse its decision to grant the above permit.

Alternatively, if DEP decides to issue the permit, I ask that several conditions be placed on that permit. First, DEP should require that the conditions contained in DEP Permit File No. AC 10-197099 for Baghouse 5 and Kiln 5 govern this permit.

Second, DEP should require that each kiln have a permanently attached baghouse or scrubber. For example, Kiln 5 would be limited to using Baghouse 5; Kiln 1 would be limited to using Baghouse 1; and Kiln 1A would be limited to using the wet scrubber.

Third, DEP should require Florida Solite to take immediate measures to clean up the installation site, especially the

scrubber pond. DEP should set deadlines for specified cleanups and impose penalties if those deadlines are not met.

Fourth, DEP should require Florida Solite to file with the DEP Northeast District office quarterly reports containing the following: (1) the amounts of LBM burned (in gallons and in tons); (2) the composition of the LBM; (3) the origin of the LBM; (4) the amount of aggregate produced; and (5) where the aggregate was shipped.

Fifth, DEP should establish emission standards for dioxins and furans at the Florida Solite installation.

Sixth, DEP should require Florida Solite to run more tests on a regular basis at the installation. These tests should be performed by both Florida Solite and an independent entity. At a minimum, these tests should cover the following: (1) the scrubber pond; (2) the liquid burnable material ("LBM") used by Florida Solite; (3) the ash produced at the installation; (4) the soil surrounding the retention pond; and (5) the Mill Log Creek tributary. These tests should include, at a minimum, measurement of volatile organic compounds, dioxins, and furans.

DATED: July 13, 1994

Stewart Harris

CERTIFICATE OF SERVICE

The undersigned hereby certifies that on July 13, 1994, the undersigned mailed a copy of the attached Petition for Administrative Hearing to the following:

Florida Solite Company
Mr. Tony Saunders, Plant Manager
P.O. Box 297
Green Cove Springs, FL 32043

DATED: July 13, 1994

Stewart Harris

PETITION FOR ADMINISTRATIVE PROCEEDING

RECEIVED
JUL 13 1994
DEPARTMENT OF
ENVIRONMENTAL PROTECTION
OFFICE OF GENERAL COUNSEL

HAND DELIVERED

Florida Department of Environmental Protection
Office of General Counsel
2600 Blair Stone Road
Tallahassee, FL 32399-2400

Re: Notice of Intent to Issue Air Permit
By Florida Department of Environmental Protection ("DEP")
To Applicant Florida Solite Company
DEP Permit File No. AC 10-222486

Pursuant to section 120.57, Florida Statutes, I petition for an administrative proceeding for DEP Permit File No. AC 10-222486. I provide the following required information:

1. My name and address are Allison Norwood, 1794 S. Lumpkin St, # 3, Athens, GA 30606. My telephone number is (706) 354-4230.

2. The applicant's name and address are Florida Solite Company ("Florida Solite"), P.O. Box 297, Green Cove Springs, FL 32043. The DEP Permit File No. is AC 10-222486. The proposed project is located in Clay County, Florida.

3. I received notice of DEP's proposed action on June 29, 1994, by means of a family member.

4. My substantial interests are affected by DEP's proposed action. Specifically, my health and the value of my property are substantially affected by the emissions and discharges caused by the operation of the Florida Solite facility. I own property approximately three miles from the Florida Solite installation. My family, whom I regularly visit, also lives approximately three miles from the Florida Solite installation. I eat and drink food products from this area.

5. I dispute the alleged fact that the proposed baghouse or associated filter receivers and other equipment will be a benefit to the environment.

6. Reversal or modification of DEP's action is warranted for several reasons. First, Florida Solite has not affirmatively provided DEP with reasonable assurances that this proposed construction "will not discharge, emit, or cause pollution in contravention of [DEP] standards or rules" as required by Rule 17-4.070, Florida Administrative Code.

Second, DEP has apparently not taken into consideration Florida Solite's long and distinguished record of serious environmental violations at its installation as also required by Rule 17-4.070, Florida Administrative Code. This record includes water quality violations, air quality violations, and noncompliance with permit monitoring requirements.

Third, Florida Solite, "a commercial hazardous waste incinerator," has not provided the certificate of need or the cumulative impact analysis as required by section 403.7895, Florida Statutes.

Fourth, the current draft of the Dioxin Reassessment Report being promulgated by the United States Environmental Protection Agency ("EPA") finds that dioxin and related compounds adversely affect human health at very low levels. Dioxins and furans have been found in samples of cement kiln dust taken from cement kilns (some of which burned hazardous waste and some of which did not).

Fifth, in City of Chicago v Environmental Defense Fund, 62

U.S.L.W. 4283 (U.S. 1994), the United States Supreme Court ruled that certain household-waste ash was hazardous waste. Under the analysis of City of Chicago, the ash produced by cement kilns such as the Florida Solite installation should also be designated hazardous waste and treated accordingly.

7. Reversal or modification of DEP's proposed action is required by Rule 17-4.070, Florida Administrative Code; section 403.7895, Florida Statutes; and the recent Supreme Court case, City of Chicago v Environmental Defense Fund.

8. I ask DEP to reverse its decision to grant the above permit.

Alternatively, if DEP decides to issue the permit, I ask that several conditions be placed on that permit. First, DEP should require that the conditions contained in DEP Permit File No. AC 10-197099 for Baghouse 5 and Kiln 5 govern this permit.

Second, DEP should require that each kiln have a permanently attached baghouse or scrubber. For example, Kiln 5 would be limited to using Baghouse 5; Kiln 1 would be limited to using Baghouse 1; and Kiln 1A would be limited to using the wet scrubber.

Third, DEP should require Florida Solite to take immediate measures to clean up the installation site, especially the scrubber pond. DEP should set deadlines for specified cleanups and impose penalties if those deadlines are not met.

Fourth, DEP should require Florida Solite to file with the DEP Northeast District office quarterly reports containing the

following: (1) the amounts of LBM burned (in gallons and in tons); (2) the composition of the LBM; (3) the origin of the LBM; (4) the amount of aggregate produced; and (5) where the aggregate was shipped.

Fifth, DEP should establish emission standards for dioxins and furans at the Florida Solite installation.

Sixth, DEP should require Florida Solite to run more tests on a regular basis at the installation. These tests should be performed by both Florida Solite and an independent entity. At a minimum, these tests should cover the following: (1) the scrubber pond; (2) the liquid burnable material ("LBM") used by Florida Solite; (3) the ash produced at the installation; (4) the soil surrounding the retention pond; and (5) the Mill Log Creek tributary. These tests should include, at a minimum, measurement of volatile organic compounds, dioxins, and furans.

DATED: July 13, 1994

Allison Norwood

CERTIFICATE OF SERVICE

The undersigned hereby certifies that on July 13, 1994, the undersigned mailed a copy of the attached Petition for Administrative Hearing to the following:

Florida Solite Company
Mr. Tony Saunders, Plant Manager
P.O. Box 297
Green Cove Springs, FL 32043

DATED: July 13, 1994

Allison Norwood

Best Available Copy

PETITION FOR ADMINISTRATIVE PROCEEDING

RECEIVED
JUL 18 1994
DEPARTMENT OF
ENVIRONMENTAL PROTECTIO
OFFICE OF GENERAL COUNSE

HAND DELIVERED

Florida Department of Environmental Protection
Office of General Counsel
2600 Blair Stone Road
Tallahassee, FL 32399-2400

Re: Notice of Intent to Issue Air Permit
By Florida Department of Environmental Protection ("DEP")
To Applicant Florida Solite Company
DEP Permit File No. AC 10-222486

Pursuant to section 120.57, Florida Statutes, I petition for an administrative proceeding for DEP Permit File No. AC 10-222486. I provide the following required information:

1. My name and address are Priscilla N. Harris, P.O. Box 702, 1752 County Road 315, Green Cove Springs, FL 32043. My telephone number is (904) 284-3367.

2. The applicant's name and address are Florida Solite Company ("Florida Solite"), P.O. Box 297, Green Cove Springs, FL 32043. The DEP Permit File No. is AC 10-222486. The proposed project is located in Clay County, Florida.

3. I received notice of DEP's proposed action on June 29, 1994, by means of Legal Notice No. 1333, published in the *Clay Today* Newspaper on June 29, 1994.

4. My substantial interests are affected by DEP's proposed action. Specifically, my health and the health of my family as well the value of my property are substantially affected by the emissions and discharges caused by the operation of the Florida Solite facility. I have two small children: one is four years old and the other is only nine months old. My family and I live and own property approximately three miles from the Florida

Solite installation. Our home has well water. We eat and drink food products from this area. We have an outside swimming pool. We regularly drive in this area.

5. I dispute the alleged fact that the proposed baghouse or associated filter receivers and other equipment will be a benefit to the environment.

6. Reversal or modification of DEP's action is warranted for several reasons. First, Florida Solite has not affirmatively provided DEP with reasonable assurances that this proposed construction "will not discharge, emit, or cause pollution in contravention of [DEP] standards or rules" as required by Rule 17-4.070, Florida Administrative Code.

Second, DEP has apparently not taken into consideration Florida Solite's long and distinguished record of serious environmental violations at its installation as also required by Rule 17-4.070, Florida Administrative Code. This record includes water quality violations, air quality violations, and noncompliance with permit monitoring requirements.

Third, Florida Solite, "a commercial hazardous waste incinerator," has not provided the certificate of need or the cumulative impact analysis as required by section 403.7895, Florida Statutes.

Fourth, the current draft of the Dioxin Reassessment Report being promulgated by the United States Environmental Protection Agency ("EPA") finds that dioxin and related compounds adversely affect human health at very low levels. Dioxins and furans have

been found in samples of cement kiln dust taken from cement kilns (some of which burned hazardous waste and some of which did not).

Fifth, in City of Chicago v Environmental Defense Fund, 62 U.S.L.W.4283 (U.S., 1994), the United States Supreme Court ruled that certain household-waste ash was hazardous waste. Under the analysis of City of Chicago, the ash produced by cement kilns such as the Florida Solite installation should also be designated hazardous waste and treated accordingly.

7. Reversal or modification of DEP's proposed action is required by Rule 17-4.070, Florida Administrative Code; section 403.7895, Florida Statutes; and the recent Supreme Court case, City of Chicago v Environmental Defense Fund.

8. I ask DEP to reverse its decision to grant the above permit.

Alternatively, if DEP decides to issue the permit, I ask that several conditions be placed on that permit. First, DEP should require that the conditions contained in DEP Permit File No. AC 10-197099 for Baghouse 5 and Kiln 5 govern this permit.

Second, DEP should require that each kiln have a permanently attached baghouse or scrubber. For example, Kiln 5 would be limited to using Baghouse 5; Kiln 1 would be limited to using Baghouse 1; and Kiln 1A would be limited to using the wet scrubber.

Third, DEP should require Florida Solite to take immediate measures to clean up the installation site, especially the

scrubber pond. DEP should set deadlines for specified cleanups and impose penalties if those deadlines are not met.

Fourth, DEP should require Florida Solite to file with the DEP Northeast District office quarterly reports containing the following: (1) the amounts of LBM burned (in gallons and in tons); (2) the composition of the LBM; (3) the origin of the LBM; (4) the amount of aggregate produced; and (5) where the aggregate was shipped.

Fifth, DEP should establish emission standards for dioxins and furans at the Florida Solite installation.

Sixth, DEP should require Florida Solite to run more tests on a regular basis at the installation. These tests should be performed by both Florida Solite and an independent entity. At a minimum, these tests should cover the following: (1) the scrubber pond; (2) the liquid burnable material ("LBM") used by Florida Solite; (3) the ash produced at the installation; (4) the soil surrounding the retention pond; and (5) the Mill Log Creek tributary. These tests should include, at a minimum, measurement of volatile organic compounds, dioxins, and furans.

DATED: July 13, 1994

Priscilla N. Harris

Priscilla N. Harris

CERTIFICATE OF SERVICE

The undersigned hereby certifies that on July 13, 1994, the undersigned mailed a copy of the attached Petition for Administrative Hearing to the following:

Florida Solite Company
Mr. Tony Saunders, Plant Manager
P.O. Box 297
Green Cove Springs, FL 32043

DATED: July 13, 1994

Priscilla N. Harris

Priscilla N. Harris

State of Florida
Department of Environmental Regulation

District Routing Slip

To: Willard Hanks Date: 7-15

C.C. To:

	Pensacola	**Northwest District**	
	Panama City	Northwest District Branch Office	
	Tallahassee	Northwest District Branch Office	
	Apalachicola	Northwest District Satellite Office	
	Tampa	**Southwest District**	
	Punta Gorda	Southwest District Branch Office	
	Bartow	Southwest District Satellite Office	
	Orlando	**Central District**	
	Melbourne	Central District Satellite Office	
✓	**Jacksonville**	**Northeast District**	
	Gainesville	Northeast District Branch Office	
	Fort Myers	**South District**	
	Marathon	South District Branch Office	
	West Palm Beach	**Southeast District**	
	Port St. Lucie	Southeast District Branch Office	

Reply Optional ☐ Reply Required ☐ Info Only ☐
Date Due _____ Date Due _____

Comments:

Copy of Fl. Solite petition

7/11
Prasad will have Solite send complete copy of notice PA

Not NED Jacksonville

From: J. Bracewell Tel.: 278-9730

10-31-90

From

Howard L. Rhodes, P.E.

PATTY

Clair — thanks

Ann

Howard

8/11

State of Florida Department of Environmental Protection

Howard —

For your info. Please return to Patty when done.

Clair

8/9

--ATTENTION MAIL ROOM--

PLEASE ROUTE THIS DOCUMENT TO:

Patty Adams

Name of Individual/Office

AIR

Mail Station Number

KOOGLER & ASSOCIATES
ENVIRONMENTAL SERVICES
4014 NW THIRTEENTH STREET
GAINESVILLE, FLORIDA 32609
904/377-5822 ▪ FAX 377-7158

Copy for Willard & GPL
RECEIVED
Orig to Patty-File
JUL 07 1994
Bureau of
Air Regulation

KA 150-90-07

July 5, 1994

Mr. Preston Lewis
Florida Department of
Environmental Protection
Twin Towers Office Building
2600 Blair Stone Road
Tallahassee, FL 32399-2400

Subject: Clay County - AP
Florida Solite Company
Comments on Draft Permit for Kilns 1/1A
Permit No. AC10-222486

Dear Mr. Lewis:

The following comments are submitted in response to the Department's Technical Evaluation and Preliminary Determination (TEPD), and draft construction permit dated June 10, 1994. As these comments are not expected to result in a significant change in FDEP's TEPD, Florida Solite has published the Notice of Intent to Issue on June 29, 1994. The proof of publication will be forwarded to FDEP when received.

CLARIFICATION OF FUEL USE

Throughout the permit application review process, the hazardous waste-derived fuel was referred to as LBM. As a result, FDEP's TEPD and draft permit also identify LBM in the same context. It should be noted, however, that Florida Solite routinely utilizes both non-hazardous as well as hazardous LBM. Therefore, while the existing scrubbers will not be used when firing hazardous LBM (hazardous waste-derived fuel), they may be utilized when firing non-hazardous LBM, and this should be clarified in the permit.

COMMENTS ON DRAFT PERMIT

1. It is requested that the permit expiration date be changed from July 1, 1995 to July 1, 1996. The current date would allow sufficient time for ducting changes but may not allow enough time for the installation of a new baghouse, debugging, compliance testing, and applying for an operation permit.

2. Specific Condition (SC) No. 7, concerning MACT for mercury, should be deleted as FDEP has determined that Section 403.7895(4)(b)2, of the Florida Statutes does not apply to this project. However, Florida Solite will accept the following provision:

   "The permittee shall install any necessary mercury emission control equipment within 12 months of final agency action by the Department determining that Maximum Available Control Technology is applicable to this facility. Such determination by the Department shall constitute a separate agency action and shall be subject to all the rights and remedies set forth in Chapter 120, Florida Statutes."

3. Florida Solite is in agreement with FDEP that the combined annual operating hours for Kilns 1 and 1A, when both kilns are utilized in a given year, are limited to 7600. However, it is our understanding that Kiln 1 is permitted to operate for 8760 hours during a year when Kiln 1A is not operated, based on the current (and past) Kiln 1 permit(s). The requirements in SC No. 8 and 19 should be revised accordingly.

4. It is requested that the LBM sampling requirement in SC No. 10 allow sampling of either the storage tank feeding the kilns (burn tank) or the tanks feeding the burn tank, thus making the condition consistent with the BIF requirements already imposed on the facility.

5. SC No. 17 has incorporated a previous permit condition which allows for the simultaneous operation of Kilns 5 and 1, or 5 and 1A, but not 1 and 1A. At this time, Florida Solite would like to request that SC No. 17 be reworded to allow the operation of any two kilns at the same time (to include Kilns 1 and 1A). As the production capacity of Kiln 5 is substantially greater than either Kiln 1 or 1A, allowing this additional operation and maintenance flexibility results in lower potential emissions as compared to the operation of Kiln 5 and either Kiln 1 or 1A.

6. Florida Solite has revised the initial estimate provided to FDEP concerning the maximum input of admixtures to the kiln system. It is requested that SC No. 20 allow up to 800 pounds per hour input of admixtures. As indicated previously to FDEP, the admixtures improve product handling by reducing excessive agglomeration.

7. It should be clarified, that measurement of the oxygen level referenced in SC No. 23, is accomplished by stack gas monitoring.

8. SC No. 26 should be reworded to require testing of Kiln 1 and 1A within 30 days of placing each kiln in service with Baghouse 1. This would allow for downtime associated with either kiln without compromising the intent of the SC.

   Also, based on the submittal of recent emission test data for Kiln 5 (operating with a baghouse), it is requested that the compliance testing requirements for Kilns 1/1A be revised as follows:

Pollutant	EPA Method	Frequency	Solite Comments
SO_2	6, 6C	Annually	Allows use of equivalent test method.
VOC	25A	Every 5 years	Based on 25/25A test comparison submitted to FDEP on Kiln 5.
Organics	VOST	Every 5 years	Insignificant emissions based on Kiln 5 test.
BIF metals	MM	Every 3 years	Consistent with BIF rule.

If you have any questions, please do not hesitate to call me.

Very truly yours,

KOOGLER & ASSOCIATES

John B. Koogler, Ph.D., P.E.

JBK:par

c: Mr. J. Braswell, OGC, FDEP
Mr. W. Congdon, OGC, FDEP
Mr. T. Saunders, Solite
Mr. A. Galliano, Solite
Mr. S. Holt, Solite
Mr. G. Eure, Solite
Mr. J. Jewett, Solite
Mr. T. Maurer, Foley & Lardner

KOOGLER & ASSOCIATES

Copy for
1. Patty - file
2. Willard Hanks
3. Todd Browner

FLORIDA SOLITE® COMPANY

P. O. BOX 297 • GREEN COVE SPRINGS • FLORIDA 32043 • (904) 284-9127

RECEIVED

JUN 27 1994

Bureau of
Air Regulation

Return to
OPL

JUNE 24, 1994

VIA - CERTIFIED MAIL
RETURN RECEIPT REQUESTED

VIRGINIA B. WETHERELL, SECRETARY
FLORIDA DEPARTMENT OF ENVIRONMENTAL PROTECTION
TWIN TOWERS OFFICE BUILDING
2600 BLAIR STONE ROAD
TALLAHASSEE, FLORIDA 32399-2400

RE: IN THE MATTER OF AN APPLICATION FOR PERMIT BY FLORIDA SOLITE COMPANY, DEP FILE NO. AC 10-222486, CLAY COUNTY

DEAR SECRETARY WETHERELL:

I AM WRITING ON BEHALF OF FLORIDA SOLITE COMPANY TO REQUEST, PURSUANT TO F.A.C. SECTION 17-103.070, AN EXTENSION OF TIME OF THIRTY DAYS TO FILE AN ADMINISTRATIVE PROCEEDING SEEKING MODIFICATION OF THE ABOVE-REFERENCED PERMIT.

THIS EXTENSION IS NECESSARY TO ALLOW THE APPLICANT, FLORIDA SOLITE COMPANY, TO CONSULT WITH DEPARTMENT STAFF FOR THE PURPOSE OF ATTEMPTING TO CLARIFY CONDITIONS OF PROPOSED PERMIT NO. AC 10-222486.

SINCERELY,

Tony Saunders

TONY SAUNDERS,
PLANT MANAGER

C: MR. WILLIAM CONGDON, OFFICE OF GENERAL COUNSEL
C.H. FANCY, P.E. BUREAU OF AIR REGULATION
PRESTION LEWIS, BUREAU OF AIR REGULATION
CHRIS KIRTS, NED
JOHN KOOGLER, P.E., KOOGLER & ASSOCIATES
THOMAS A. MAURER, ESQ., FOLEY & LARDNER

TS/MR

Florida Department of
Environmental Protection

Twin Towers Office Building
2600 Blair Stone Road
Tallahassee, Florida 32399-2400

Lawton Chiles
Governor

Virginia B. Wetherell
Secretary

June 13, 1994

CERTIFIED MAIL-RETURN RECEIPT REQUESTED

Mr. Lawrence E. Sellers, Jr.
Holland and Knight
315 S. Calhoun
Tallahassee, Florida 32301

RE: Florida Solite Company
AC 10-222486, Clay County
Kilns No. 1, 1A and 5

Dear Mr. Sellers:

As you requested, enclosed is a copy of the Department's Intent to Issue, Technical Evaluation and Preliminary Determination, and proposed permit for the above referenced project.

Sincerely,

Patricia G. Adams

for C. H. Fancy, P.E.
Chief
Bureau of Air Regulation

CHF/pa

Enclosure

Printed on recycled paper.

P 872 563 639

Receipt for Certified Mail
No Insurance Coverage Provided
Do not use for International Mail
(See Reverse)

UNITED STATES POSTAL SERVICE

Sent to Mr. Lawrence E. Sellers	
Street and No. 315 S. Calhoun	
P.O., State and ZIP Code Tallahassee, FL 32301	
Postage	$
Certified Fee	
Special Delivery Fee	
Restricted Delivery Fee	
Return Receipt Showing to Whom & Date Delivered	
Return Receipt Showing to Whom, Date, and Addressee's Address	
TOTAL Postage & Fees	$
Postmark or Date Mailed: 6-13-94 Permit: AC 10-222486	

PS Form 3800, JUNE 1991

P 872 563 638

Receipt for Certified Mail
No Insurance Coverage Provided
Do not use for International Mail
(See Reverse)

UNITED STATES POSTAL SERVICE

Sent to Mr. Tony Saunders	
Street and No. Plant Manager	
P.O., State and ZIP Code Florida Solite Company	
Postage P. O. Box 297	$
Certified Fee Green Cove Springs, FL	
Special Delivery Fee 32043	
Restricted Delivery Fee	
Return Receipt Showing to Whom & Date Delivered	
Return Receipt Showing to Whom, Date, and Addressee's Address	
TOTAL Postage & Fees	$
Postmark or Date AC10-222486 mailed 6-10-94	

PS Form 3800, JUNE 1991

SENDER:
- Complete items 1 and/or 2 for additional services.
- Complete items 3, and 4a & b.
- Print your name and address on the reverse of this form so that we can return this card to you.
- Attach this form to the front of the mailpiece, on on the back if space does not permit.
- Write "Return Receipt Requested" on the mailpiece below the article number.
- The Return Receipt will show to whom the article was delivered and the date delivered.

RECEIVED
JUN 15 1994
Bureau of Air Regulation

I also wish to receive the following services (for an extra fee):
1. ☐ Addressee's Address
2. ☐ Restricted Delivery

Consult postmaster for fee.

3. Article Addressed to:
Mr. Lawrence E. Sellers, Jr.
Holland & Knight
315 uth Calhoun
Tallahassee, FL 32301

4a. Article Number
P 872 563 639

4b. Service Type
☐ Registered ☐ Insured
☒ Certified ☐ COD
☐ Express Mail ☐ Return Receipt for Merchandise

7. Date of Delivery
6-14-94

5. Signature (Addressee)
Connie B. Kaminer

6. Signature (Agent)

8. Addressee's Address (Only if requested and fee is paid)

Is your RETURN ADDRESS completed on the reverse side?

Thank you for using Return Receipt Service.

PS Form 3811, December 1991 ☆U.S. GPO: 1992—323-402 **DOMESTIC RETURN RECEIPT**

BEST AVAILABLE COPY

VOICE REQUEST JUN-22-'94 WED 17:06

PLEASE CALL BACK TO THE FOLLOWING.

TERM ID: 1 904 921 4303

MESSAGE CONFIRMATION JUN-22-'94 WED 17:27

TERM ID: P-9999

TEL NO:

NO.	DATE	ST.TIME	TOTAL TIME	ID	DEPT CODE	OK	NG
761	06-22	17:17	00°09'12	1 904 921 4303		14	00

MESSAGE CONFIRMATION JUN-22-'94 WED 17:06

TERM ID: P-9999

TEL NO:

NO.	DATE	ST.TIME	TOTAL TIME	ID	DEPT CODE	OK	NG
760	06-22	16:55	00°10'19	1 904 921 4303		15	00

Department of
Environmental Protection

Lawton Chiles
Governor

Twin Towers Office Building
2600 Blair Stone Road
Tallahassee, Florida 32399-2400

Virginia B. Wetherell
Secretary

FAX TRANSMITTAL SHEET

TO: Dale Patchett

DATE: 6/22/94 PHONE:

TOTAL NUMBER OF PAGES, INCLUDING COVER PAGE: ~~29~~ 14

FROM: Howard R Rhodes

DIVISION OF AIR RESOURCES MANAGEMENT

COMMENTS:

PHONE: FAX NUMBER: 904/922-6979

If there are any problems with this fax transmittal, please call the above phone number.

"Protect, Conserve and Manage Florida's Environment and Natural Resources"

Printed on recycled paper.

Florida Department of
Environmental Protection

Twin Towers Office Building
2600 Blair Stone Road
Tallahassee, Florida 32399-2400

Lawton Chiles
Governor

Virginia B. Wetherell
Secretary

PERMITTEE:
Florida Solite Company
P. O. Box 297
Green Cove Springs, FL 32043

Permit Number: AC 10-222486
Expiration Date: July 1, 1995*
County: Clay
Latitude/Longitude: 30°04'07"N
81°45'17"W
Project: Baghouse No. 1 Project

This permit is issued under the provisions of Chapter 403, Florida Statutes, and Florida Administrative Code Chapters 17-212 and 17-4. The above named permittee is hereby authorized to perform the work or operate the facility shown on the application and approved drawings, plans, and other documents attached hereto or on file with the Department and made a part hereof and specifically described as follows:

Authorization to install: baghouse No. 1, a top load pulse-jet dust collector (or equivalent); heat exchanger; modify the duct systems for kilns Nos. 1, 1A, and 5 to allow any kiln to discharge through either baghouse No. 5 (existing) or baghouse No. 1 (new); a pug mill filter receiver; a clinker hopper filter receiver; pneumatic system to connect the new baghouse to the existing lime and clay fines systems; and associated equipment.

The existing scrubber systems may be used to control the emissions from any of the kilns only when liquid burnable material (LBM) is not being used as fuel by the kiln.

Stack parameters for the sources covered by this permit are:

Stack	Height (ft.)	Diameter (ft.)	ACFM	DSCFM	Temp(°F)
Baghouse No. 1	72	4.33	78,400	40,000	420
Clay Fines Bin (Existing)	52	0.5	900	800	100
Lime Bin (Existing)	65	0.5	722	675	77
Pug Mill Filter Receiver	30	0.42	570	525	80
Clinker Hopper Filter Receiver	30	0.42	570	525	80

The baghouses do not have by-pass stacks. Except for fugitive emissions, all emissions must pass through a baghouse.

Printed on recycled paper.

Baghouse No. 1 and the associated equipment will be located at the permittee's lightweight aggregate manufacturing facility (SIC 3295) on County Road 209A, north of Green Cove Springs, Clay County, Florida 32043. The UTM coordinates of this site are Zone 17, 427.3 km E and 3326.5 km N.

*This permit is void if construction does not commence within 18 months of its issuance, if construction is discontinued for more than 18 months, or if construction is not completed and the plant is not placed in operation within a reasonable time.

The source shall be constructed in accordance with the permit application, plans, documents, amendments and drawings, except as otherwise noted in the General and Specific Conditions.

Attachments are listed below:
1. Application received November 30, 1992.
2. DER's December 22, 1992, letter.
3. Koogler's September 10, 1993, letter.
4. DEP's October 12, 1993, letter.
5. Koogler's December 14, 1993, letter.
6. DEP's January 13, 1994, letter.
7. Koogler's February 17, 1994, letter.
8. Koogler's February 28, 1994, letter.
9. Florida Solite's March 15, 1994, letter.
10. DEP's March 31, 1994, letter.
11. Koogler's April 6, 1994, letter.

GENERAL CONDITIONS:

1. The terms, conditions, requirements, limitations, and restrictions set forth in this permit are "Permit Conditions" and are binding and enforceable pursuant to Sections 403.161, 403.727, or 403.859 through 403.861, Florida Statutes. The permittee is placed on notice that the Department will review this permit periodically and may initiate enforcement action for any violation of these conditions.

2. This permit is valid only for the specific processes and operations applied for and indicated in the approved drawings or exhibits. Any unauthorized deviation from the approved drawings, exhibits, specifications, or conditions of this permit may constitute grounds for revocation and enforcement action by the Department.

3. As provided in Subsections 403.087(6) and 403.722(5), Florida Statutes, the issuance of this permit does not convey any vested rights or any exclusive privileges. Neither does it authorize any injury to public or private property or any invasion of personal rights, nor any infringement of federal, state or local laws or regulations. This permit is not a waiver of or approval of any other Department permit that may be required for other aspects of the total project which are not addressed in the permit.

4. This permit conveys no title to land or water, does not constitute State recognition or acknowledgement of title, and does not constitute authority for the use of submerged lands unless herein provided and the necessary title or leasehold interests have been obtained from the State. Only the Trustees of the Internal Improvement Trust Fund may express State opinion as to title.

5. This permit does not relieve the permittee from liability for harm or injury to human health or welfare, animal, or plant life, or property caused by the construction or operation of this permitted source, or from penalties therefore; nor does it allow the permittee to cause pollution in contravention of Florida Statutes and Department rules, unless specifically authorized by an order from the Department.

6. The permittee shall properly operate and maintain the facility and systems of treatment and control (and related appurtenances) that are installed or used by the permittee to achieve compliance with the conditions of this permit, as required by Department rules. This provision includes the operation of backup or auxiliary facilities or similar systems when necessary to achieve compliance with the conditions of the permit and when required by Department rules.

GENERAL CONDITIONS:

7. The permittee, by accepting this permit, specifically agrees to allow authorized Department personnel, upon presentation of credentials or other documents as may be required by law and at a reasonable time, access to the premises, where the permitted activity is located or conducted to:

a. Have access to and copy any records that must be kept under the conditions of the permit;

b. Inspect the facility, equipment, practices, or operations regulated or required under this permit; and

c. Sample or monitor any substances or parameters at any location reasonably necessary to assure compliance with this permit or Department rules.

Reasonable time may depend on the nature of the concern being investigated.

8. If, for any reason, the permittee does not comply with or will be unable to comply with any condition or limitation specified in this permit, the permittee shall immediately provide the Department with the following information:

a. a description of and cause of non-compliance; and

b. the period of noncompliance, including dates and times; or, if not corrected, the anticipated time the non-compliance is expected to continue, and steps being taken to reduce, eliminate, and prevent recurrence of the non-compliance.

The permittee shall be responsible for any and all damages which may result and may be subject to enforcement action by the Department for penalties or for revocation of this permit.

9. In accepting this permit, the permittee understands and agrees that all records, notes, monitoring data and other information relating to the construction or operation of this permitted source which are submitted to the Department may be used by the Department as evidence in any enforcement case involving the permitted source arising under the Florida Statutes or Department rules, except where such use is prescribed by Sections 403.73 and 403.111, Florida Statutes. Such evidence shall only be used to the extent it is consistent with the Florida Rules of Civil Procedure and appropriate evidentiary rules.

GENERAL CONDITIONS:

10. The permittee agrees to comply with changes in Department rules and Florida Statutes after a reasonable time for compliance, provided, however, the permittee does not waive any other rights granted by Florida Statutes or Department rules.

11. This permit is transferable only upon Department approval in accordance with Florida Administrative Code Rules 17-4.120 and 17-30.300, F.A.C., as applicable. The permittee shall be liable for any non-compliance of the permitted activity until the transfer is approved by the Department.

12. This permit or a copy thereof shall be kept at the work site of the permitted activity.

13. The permittee shall comply with the following:

a. Upon request, the permittee shall furnish all records and plans required under Department rules. During enforcement actions, the retention period for all records will be extended automatically unless otherwise stipulated by the Department.

b. The permittee shall hold at the facility or other location designated by this permit records of all monitoring information (including all calibration and maintenance records and all original strip chart recordings for continuous monitoring instrumentation) required by the permit, copies of all reports required by this permit, and records of all data used to complete the application for this permit. These materials shall be retained at least three years from the date of the sample, measurement, report, or application unless otherwise specified by Department rule.

c. Records of monitoring information shall include:

- the date, exact place, and time of sampling or measurements;
- the person responsible for performing the sampling or measurements;
- the dates analyses were performed;
- the person responsible for performing the analyses;
- the analytical techniques or methods used; and
- the results of such analyses.

14. When requested by the Department, the permittee shall within a reasonable time furnish any information required by law which is

GENERAL CONDITIONS:

needed to determine compliance with the permit. If the permittee becomes aware that relevant facts were not submitted or were incorrect in the permit application or in any report to the Department, such facts or information shall be corrected promptly.

SPECIFIC CONDITIONS:

Construction Requirements

1. The construction of baghouse No. 1, duct system, pug mill filter receiver, clinker hopper filter receiver, material handling systems, and associated equipment shall conform to the plans in the application (F.A.C. Rule 17-4.070).

2. A programmable logic controller shall be installed for each kiln that will allow liquid burnable material (LBM) to be burned only when all of the flue gas from the kiln passes through a kiln's baghouse (dust collector) and both the kiln and the baghouse are operating properly (F.A.C. Rule 17-4.070).

3. A Ramsey belt scale system (or equivalent) to measure the clay input shall be installed to determine the clay feed rate to each kiln while it is in service. Maximum error of the scale shall not exceed 2 percent. A front end loader at this facility shall be equipped with a scale that can be used to measure the production of any kiln (F.A.C. Rule 17-4.070).

4. The permittee shall install, calibrate, operate, and maintain sulfur dioxide, carbon monoxide, and oxygen continuous emission monitors that meet the applicable performance specifications listed in 40 CFR 60, Appendix B (July 1, 1993) on baghouse No. 1. Each kiln will have a recording pyrometer and its operation temperature shall be recorded anytime LBM is used for fuel for the kiln (F.A.C. Rule 17-4.070).

5. The baghouses handling the kilns flue gasses shall be equipped with instruments that continuously record the pressure drop when the units are in operation. The instruments shall be properly calibrated and maintained (F.A.C. Rule 17-4.070).

6. The stack serving baghouse No. 1 shall be equipped with sampling facilities that meet all specifications listed in F.A.C. Rule 17-297.345.

7. The permittee shall install mercury emission control equipment within 12 months of being notified that Maximum Available Control Technology is applicable for this facility (Section 403.7895(4)(b)2, F.S.).

SPECIFIC CONDITIONS:

ALLOWABLE EMISSIONS

8. When baghouse No. 1 is serving kiln No. 5, the emissions shall not exceed any of the limits specified in permit No. AC 10-197099 that was issued for baghouse No. 5 on April 7, 1993. Maximum allowable emissions from either baghouse No. 1 or 5 while it is serving either kiln Nos. 1 or 1A shall not exceed any of the following:

Pollutant	Standard	Kiln 1*		Kiln 1A*	
		Lbs/hr	TPY	Lbs/hr	TPY
PM	0.08 gr/dscf @ 7% O_2	11.8	44.8	11.8	44.8
SO_2**	30 day average	84.0	319.2	75.8	288.0
NO_x		15.3	58.1	14.2	54.0
CO***	100 ppmvd @ 7% O_2	7.5	28.5	7.5	28.5
VOC	20 ppmvd	5.5	20.9	5.5	20.9
VE	15% opacity	15% opacity		15% opacity	

* 7,600 hrs/yr operation (Specific Condition No. 23 of permit No. AC 10-125262 for the construction of kiln No. 1A)
** 226 lbs SO_2/hr (1 hr. max)
(F.A.C. Rule 17-4.070 and 40 CFR 266)
***Alternate CO standard allowed (40 CFR 266)

9. Maximum allowable particulate matter emissions from other baghouses at this facility shall not exceed 5 percent opacity or 0.02 gr/dscf and:

Source	Particulate Matter	
	Lbs/hr	TPY
Clay Fines Bin (existing)	0.14	0.6
Lime Bin (existing)	0.12	0.5
Pug Mill Filter Receiver (new)	0.1	0.4
Clinker Hopper Filter Receiver (new)	0.1	0.4

(F.A.C. Rule 17-297.340(3))

SPECIFIC CONDITIONS:

10. The combined emissions of metals and other air pollutants from all sources at this facility shall not result in ambient air concentrations (predicted by Department approved modeling) that harm or injure human health or welfare, animal, plant, or aquatic life or property. This will be demonstrated by the permittee modeling the maximum emissions of the metals which could be emitted by this facility. This demonstration shall be made using the protocol in attachment 10 of the Air Construction Permit Application for Kilns Nos. 1 and 1A. The modeling results must be approved by the Department. The tested emissions rate shall not exceed the maximum estimated rate that was used to show that ambient concentrations from this facility are less than the Department's annual acceptable ambient concentrations.

Clay feed shall be sampled and analyzed weekly for the Boiler and Industrial Furnace (BIF) metals (40 CFR 261, Appendix 111, Table 2).

The permittee shall document the concentration of polychlorinated biphenyls (PCB's), sulfur, chlorides and BIF metals in the LBM as fired in any kiln. The LBM storage tank feeding the kilns shall be reanalyzed each time LBM is added to it. The maximum concentration of metals in the LBM shall not exceed the concentration allowed under 40 CFR 266, Subpart H, or the following limits (whichever is more restrictive):

Metal	PPM (by weight)
Antimony	5,000
Arsenic	1,000
Barium	500,000
Beryllium	3,000
Cadmium	1,000
Chlorides	34,000
Chromium	10,000
Cr+6	1,000
Lead	50,000
Mercury	0.2
Nickel	5,000
Selenium	5,000
Silver	50,000
Sulfur	20,000
Thallium	2,000

(Section 403.161, F.S.)

SPECIFIC CONDITIONS:

11. Lead emissions from Kiln Nos. 1 and 1A shall not exceed the lesser of 1.9 lbs/hr or one-third of the emissions allowed under the BIF Rule (40 CFR 266.106(d)), whichever is more restrictive. (January 23, 1993, Settlement Agreement for kiln No. 5).

12. The LBM, as burned, shall not contain mercury at concentrations greater than 0.2 mg/l or the concentration allowed under 40 CFR 266, Subpart H, whichever is more restrictive. The permittee shall confirm that the LBM, as burned, does not contain mercury in excess of the most restrictive concentration by sampling and analysis for mercury as required by the BIF Rule (40 CFR 266, Subpart H). The Permittee may burn LBM containing mercury at concentrations greater than 0.2 mg/l only to the extent necessary during stack testing for the purpose of demonstrating BIF Rule compliance, so long as Florida DEP and/or U.S. EPA have been notified (January 23, 1993, Settlement Agreement for kiln No. 5).

13. The operation of this facility shall not result in the emissions of air pollutants which cause or contribute to an objectionable odor. (F.A.C. Rule 17-296.320).

14. Reasonable precautions shall be used to minimize unconfined emissions of particulate matter generated by this operation pursuant to F.A.C. Rule 17-296.310(3). Reasonable precautions shall be defined as the application of dust suppressants to the material/operation listed in the following table when the visible emissions (maximum 6 minute rolling average) exceed the listed opacity:

Material/Operation	Visible Emissions (Opacity)
Raw Clay Feed Area	5
Coal Storage Area and Coal Handling Equipment	10
Discharges of Product from the Kiln into the Product Cooler	10
Handling and Storage of the Product	20

Also, particulate matter collected by the baghouses shall be managed in enclosed tanks, containers, or conveyances so that it is shielded from wind and rain and shall not be placed on the ground prior to its use as a raw material or its incorporation into the aggregate product or its permitted disposal at a facility authorized to handle this material (F.A.C. Rule 17-296.310(3)).

SPECIFIC CONDITIONS:

Operation Requirements

15. Operation of kiln No. 5 with baghouse No. 1 is subject to all conditions in permit No. AC 10-197099 (construction permit for baghouse No. 5) or a valid air operation permit issued pursuant to this permit (F.A.C. Rule 17-4.160).

16. If a kiln is not burning LBM, the emissions may be controlled with its scrubber provided emissions/operations of the kiln/scrubber meet all conditions of the permit and the air regulations (F.A.C. Rule 17-4.070).

17. Kilns Nos. 1 and 1A shall not be in service at the same time. (Application)

18. Each baghouse may only control the emissions from one kiln at a time. (Application)

19. Kilns Nos. 1 and 1A may operate 24 hrs/day, 7 days/week, 52 weeks/year but not over 7,600 hours during any calendar year. (Specific Condition No. 23 of permit No. AC 10-125262 issued January 15, 1987, for the construction of kiln No. 1A)

20. Maximum clay input to kilns 1 or 1A shall not exceed 14.4 TPH (wet) or 8.6 TPH (dry). Admixture (hydrated lime or crushed dolomitic limestone) input shall not exceed 500 lbs/hr. Production shall not exceed 7.0 TPH (dry). (Application)

21. The maximum allowable sulfur content of the fuels and the heat input to kilns Nos. 1 and 1A shall not exceed any of the following:

KILN	MMBTU/HR*	MMBTU/TON PRODUCT	LBM**(GPH)	COAL***(TPH)	NO. 2 OIL****(GPH)	PROPANE(GPH)	NAT. GAS (MMCFH)
1	47.6	6.8	476	1.3	340	520	0.05
1A	47.6	6.8	476	2.0	340	520	0.05

*When fuels are burned in combination, the maximum allowable heat input and sulfur dioxide emission limits for the kiln shall not be exceeded

**Maximum sulfur content of the LBM is 2.0 percent, 0.4 percent (30 day average).

***Maximum sulfur content of the coal is 1.5 percent

****Maximum sulfur content of the No. 2 oil is 0.5 percent and 0.3 percent, annual average.

(Application, existing permits, and F.A.C. Rule 17-4.070)

22. Oldover Corporation, or another facility permitted to manage hazardous waste under the provisions of 40 CFR 260 through 40 CFR 270, must supply all LBM used by Florida Solite Company. The permittee is responsible for the LBM meeting all the requirements of this permit and all applicable state, federal, and local

SPECIFIC CONDITIONS:

regulations. The LBM shall not contain any hazardous waste that is listed for dioxin or derived from the dioxin-listed wastes F020, F021, F022, F023, F026, or F027, as specified in 40 CFR 261, Subpart H, organic cyanides, sulfide, mercaptans, insecticides, pesticides, herbicides, electroplating waste, or radioactive material above the detection level by the appropriate analytical procedure. The LBM can contain up to 5.0 ppm polychlorobiphenyls (PCB) provided all applicable requirements listed in 40 CFR 761 (July 1, 1992) are met. In addition to those conditions required by 40 CFR 761.20, the permittee shall document that the LBM contains less than 5.0 ppm of PCB and has not been mixed with materials containing PCBs in concentrations of 50 ppm or greater. The LBM shall be tested for PCBs by Methods 3665/8080 as described in SW-846, 3rd Edition (1986), update 2 (Nov. 1992), and radioactivity prior to acceptance at the facility. The permittee shall retain the manifest of each LBM shipment or load for 3 years for Department inspection. (January 23, 1993, Settlement Agreement for kiln No. 5).

23. When burning LBM in any kiln at this facility, the kiln baghouse inlet temperature, carbon monoxide, sulfur dioxide, and oxygen concentration of the flue gas shall be continuously monitored downstream of the furnace but prior to release to the atmosphere in the manner prescribed by the Boiler and Industrial Furnace Rule (40 CFR 266, Subpart H). The kiln shall operate at a minimum temperature of 1800°F and at a minimum oxygen level of 6 percent, and a maximum flue gas temperature at the baghouse inlet of 450° F. The concentration of CO in the stack gases shall not exceed a maximum of 100 ppmv on an hourly rolling average basis, corrected to 7% oxygen, unless the permittee complies with the alternative carbon monoxide and hydrocarbon standard prescribed by 40 CFR 266.104(c) and (f) while using a continuous hydrocarbon analyzer. (40 CFR 266, Subpart H)

24. Kiln Nos. 1 and 1A shall achieve a minimum destruction and removal efficiency (DRE) of 99.99% for all organic hazardous constituents when burning hazardous LBM. Compliance with this requirement shall be demonstrated as required by 40 CFR 266.104(a).

<u>Compliance Testing</u>

25. Testing of emissions shall be conducted with the source operating at permitted capacity. Permitted capacity is defined as 90-100 percent of the maximum operating rate allowed by the permit. If it is impracticable to test at permitted capacity, then sources may be tested at less than capacity; in this case subsequent source operation is limited to 110 percent of the test load until a new test is conducted. Once the unit is so limited, then operation at higher capacities is allowed for no more than 15 consecutive days

SPECIFIC CONDITIONS:

for the purposes of additional compliance testing to regain the permitted capacity in the permit. (F.A.C. Rule 17-297.310)

26. Kiln Nos. 1 and 1A shall be tested at a feed rate of 7.7 to 8.6 TPH clay input (dry) within 30 days of placing baghouse No. 1 in service for the following pollutants:

Pollutant	Method* (40 CFR 60, Appendix A, 7/1/91)	Frequency	Comments**
PM	5	Annually	While burning coal or LBM
SO_2	6	Annually	While burning coal or LBM
NOx	7E	Every 5 yrs	
VE	9	Annually	While burning coal or LBM
VOC	25	Every 5 yrs	While burning LBM
BIF Metals	EPA Multi/-Metal sampling train	Annually	While burning LBM
Organic***	VOST	Annually	While burning LBM. Analyze by Method 8240 of SW-846

* Or other methods with DEP approval.

** Annual stack tests shall be conducted on the kiln baghouses Nos. 1 and 5. The specified tests must be conducted while the plant is burning any fuel that has been used for more than 400 hours during the preceding 12 months. Tests shall be conducted on any air pollution control system that is used more than 400 hours during any year following initial testing of the baghouses.

*** Analyze for all volatile organic constituents listed in Method 8240.

(F.A.C. Rule 17-297)

Administrative Requirements

27. Stack test reports which include the emissions, raw material feed rates, fuel type and rate, and clay/fuel analyses shall be submitted to the Northeast District office within 45 days of the test. (F.A.C. Rule 17-297.570)

28. When the Department, after investigation, has good reason (such as complaints, increased visible emissions, or questionable maintenance of control equipment) to believe that any applicable

SPECIFIC CONDITIONS:

emission standard contained in this permit is being violated, it may require the owner or operator of the unit to conduct compliance tests which identify the nature and quantity of pollutant emissions from the source and to provide a report on the results of said tests to the Department. (F.A.C. Rule 17-297.340(2))

29. The Northeast District office shall be notified in writing a minimum of 15 days in advance of any compliance tests to be conducted on this source. (F.A.C. Rule 17-297.340(1)(i))

30. Nothing in this permit shall exempt the permittee from the requirements of 40 CFR 761, Polychlorinated Biophenyls, 40 CFR 266, Subpart H, Hazardous Waste Burned in Boilers and Industrial Furnaces, and Chapter 17-730, F.A.C., Hazardous Waste, or any other requirement outside the purview of the Department's air regulation (F.A.C. Rule 17-296 and 297). The permittee shall obtain such state and federal permits, when applicable, pursuant to any hazardous waste regulation. (F.A.C. Rule 17-4.160)

31. The permittee, for good cause, may request that this construction permit be extended. Such a request shall be submitted to the Bureau of Air Regulation at least 60 days prior to the expiration of the permit (F.A.C. Rule 17-4.090).

32. An application for an operation permit must be submitted to the Northeast District office at least 90 days prior to the expiration date of this construction permit. To properly apply for an operation permit, the applicant shall submit the appropriate application form, fee, certification that construction was completed noting any deviations from the conditions in the construction permit, and compliance test reports as required by this permit (F.A.C. Rules 17-4.055 and 17-4.220). Any operating permit issued shall require an annual operation report be submitted by March 1 of each year. (F.A.C. Rule 17-4.070)

STATE OF FLORIDA DEPARTMENT
OF ENVIRONMENTAL PROTECTION

_____
Virginia B. Wetherell, Secretary

Florida Solite Company Baghouse No. 1 Project Application

The Department of Environmental Protection has concluded that Requirements for the Permitting of Commercial Hazardous Waste Incinerators, Section 403.7869(2), Florida Statutes, does not apply to this application.

Bill Cyp

Florida Department of
Environmental Protection

Lawton Chiles
Governor

Twin Towers Office Building
2600 Blair Stone Road
Tallahassee, Florida 32399-2400

Virginia B. Wetherell
Secretary

June 10, 1994

CERTIFIED MAIL - RETURN RECEIPT REQUESTED

Mr. Tony Saunders, Plant Manager
Florida Solite Company
Post Office Box 297
Green Cove Springs, Florida 32043

Dear Mr. Saunders:

Attached is one copy of the proposed permit for the alternation to kilns Nos. 1, 1A and 5 at your lightweight aggregate plant located near Green Cove Springs, Clay County, Florida.

Please submit any written comments you wish to have considered concerning the Department's proposed action to Mr. Preston Lewis of the Bureau of Air Regulation.

Sincerely,

C. H. Fancy, P.E.
Chief
Bureau of Air Regulation

CHF/WH/bjb

Attachment

cc: Chris Kirts, NED
John Koogler, P.E.
William Congdon, OGC
Betty S. Holzendorf
George Kirkpatrick
Ander Crenshaw
Stephen R. Wise
John Thrasher
Tracy W. Upchurch
Kelley R. Smith
Mayor, Green Cove Springs
Clay County Board of Commissioners

Printed on recycled paper.

STATE OF FLORIDA
DEPARTMENT OF ENVIRONMENTAL PROTECTION

CERTIFIED MAIL

In the Matter of an
Application for Permit by:

DEP File No. AC 10-222486
Clay County

Florida Solite Company
P. O. Box 297
Green Cove Springs, Florida 32043
_____/

INTENT TO ISSUE

The Department of Environmental Protection gives notice of its intent to issue a permit (copy attached) for the proposed project, as detailed in the application specified above, for the reasons stated in the attached Technical Evaluation and Preliminary Determination.

The applicant, Florida Solite Company, applied on November 30, 1992, to the Department of Environmental Protection for a permit to construct a duct system to connect kilns Nos. 1 and 1A to the existing baghouse (dust collector) for kiln No. 5. The application was amended on September 13, 1993, to include a new baghouse that could serve kilns Nos. 1, 1A, or 5. Any kiln can discharge through either baghouse. The amended application included a pug mill filter receiver and a clinker hopper filter receiver to handle the particulate matter captured by the kiln's baghouses. This lightweight aggregate production facility is located near Green Cove Springs, Clay County, Florida.

The Department has permitting jurisdiction under the provisions of Chapter 403, Florida Statutes and Florida Administrative Code (F.A.C.) Chapters 17-212 and 17-4. The project is not exempt from permitting procedures. The Department has determined that a construction permit is required for the proposed work.

Pursuant to Section 403.815, Florida Statutes and Rule 17-103.150, F.A.C., you (the applicant) are required to publish at your own expense the enclosed Notice of Intent to Issue Permit. The notice shall be published one time only within 30 days in the legal ad section of a newspaper of general circulation in the area affected. For the purpose of this rule, "publication in a newspaper of general circulation in the area affected" means publication in a newspaper meeting the requirements of Sections 50.011 and 50.031, F.S., in the county where the activity is to take place. The applicant shall provide proof of publication to the Department's Bureau of Air Regulation, 2600 Blair Stone Road, Tallahassee, Florida 32399-2400, within seven days of publication. Failure to publish the notice and provide proof of publication within the allotted time may result in the denial of the permit.

The Department will issue the permit with the attached conditions unless a petition for an administrative proceeding (hearing) is filed pursuant to the provisions of Section 120.57, F.S.

A person whose substantial interests are affected by the Department's proposed permitting decision may petition for an administrative proceeding (hearing) in accordance with Section 120.57, Florida Statutes. The petition must contain the information set forth below and must be filed (received) in the Office of General Counsel of the Department at 2600 Blair Stone Road, Tallahassee, Florida 32399-2400. Petitions filed by the permit applicant and the parties listed below must be filed within 14 days of receipt of this intent. Petitions filed by other persons must be filed within 14 days of publication of the public notice or within 14 days of their receipt of this intent, whichever first occurs. Petitioner shall mail a copy of the petition to the applicant at the address indicated above at the time of filing. Failure to file a petition within this time period shall constitute a waiver of any right such person may have to request an administrative determination (hearing) under Section 120.57, Florida Statutes.

The Petition shall contain the following information;

(a) The name, address, and telephone number of each petitioner, the applicant's name and address, the Department Permit File Number and the county in which the project is proposed;
(b) A statement of how and when each petitioner received notice of the Department's action or proposed action;
(c) A statement of how each petitioner's substantial interests are affected by the Department's action or proposed action;
(d) A statement of the material facts disputed by Petitioner, if any;
(e) A statement of facts which petitioner contends warrant reversal or modification of the Department's action or proposed action;
(f) A statement of which rules or statutes petitioner contends require reversal or modification of the Department's action or proposed action; and
(g) A statement of the relief sought by petitioner, stating precisely the action petitioner wants the Department to take with respect to the Department's action or proposed action.

If a petition is filed, the administrative hearing process is designed to formulate agency action. Accordingly, the Department's final action may be different from the position taken by it in this intent. Persons whose substantial interests will be affected by any decision of the Department with regard to the application have the right to petition to become a party to the proceeding. The petition must conform to the requirements specified above and be filed (received) within 14 days of receipt of this intent in the Office of General Counsel at the above address of the Department. Failure to petition within the allowed time frame constitutes a

waiver of any right such person has to request a hearing under Section 120.57, F.S., and to participate as a party to this proceeding. Any subsequent intervention will only be at the approval of the presiding officer upon motion filed pursuant to Rule 28-5.207, F.A.C.

Executed in Tallahassee, Florida.

FILING AND ACKNOWLEDGEMENT
FILED, on this date, pursuant to §120.52(11), Florida Statutes, with the designated Department Clerk, receipt of which is hereby acknowledged.

Mary L. Wilson 6-10-94
Clerk date

STATE OF FLORIDA DEPARTMENT
OF ENVIRONMENTAL PROTECTION

C. H. Fancy, P.E., Chief
Bureau of Air Regulation
2600 Blair Stone Road
M.S. 5500
Tallahassee, Florida 32399
904/488-1344

CERTIFICATE OF SERVICE

The undersigned hereby certifies that this INTENT TO ISSUE was mailed by certified mail on the 11th day of June, 1994 to

Florida Solite Company
Post Office Box 297
Green Cove Springs, Florida 32043

STATE OF FLORIDA DEPARTMENT
OF ENVIRONMENTAL PROTECTION

C. H. FANCY, P.E., CHIEF
Bureau of Air Regulation
2600 Blair Stone Road
Tallahassee, Florida 32399
904/488-1344

Copies furnished to:

Chris Kirts, NED
John Koogler, P.E.
William Congdon, OGC
Betty S. Holzendorf
George Kirkpatrick
Ander Crenshaw
Stephen R. Wise
John Thrasher
Tracy W. Upchurch
Kelley R. Smith
Mayor, Green Cove Springs
Clay County Board of Commissioners

STATE OF FLORIDA
DEPARTMENT OF ENVIRONMENTAL PROTECTION
NOTICE OF INTENT TO ISSUE PERMIT

The Department of Environmental Protection gives notice of its intent to issue an air permit to Florida Solite Company, P. O. Box 297, Green Cove Springs, Florida 32043. The permit will authorize the construction of a new baghouse (dust collector), duct system, and associated equipment that will allow any of the three lightweight aggregate kilns (Nos. 1, 1A, and 5) at this facility to discharge through the new baghouse or the existing baghouse that now serves kiln No. 5. They will also install a new pug mill filter receiver and a clinker hopper filter receiver to handle the particulate matter captured by the baghouses. The kilns are located at the applicant's facility on County Road 209A, north of Green Cove Springs, Clay County, Florida. There will be no change in the quantity of fuel used and light aggregate manufactured by this facility. The uncontrolled emissions from the kilns are not changed by the proposed equipment. The baghouses shall be used on any kiln burning liquid burnable material (LBM). The use of these baghouses along with the liming system will be a benefit to the environment because they have the potential to reduce particulate matter and sulfur dioxide emissions. The existing kiln scrubbers may be retained as an alternate air pollution control device and used on any kiln that is not burning LBM. Maximum emissions from either kiln No. 1 or No. 1A will not exceed: 11.8 lbs/hr (44.8 TPY) particulate matter; 226 lbs/hr for a maximum of 1 hour and 84.0 lbs/hr for a 30-day average (319.2 TPY) sulfur dioxide; 5.5 lbs/hr (20.9 TPY) volatile organic compounds, and 15.3 lbs/hr (58.1 TPY) nitrogen oxides. The particulate matter emissions from the pug mill filter receiver and the clinker hopper filter receiver are estimated to be 0.1 lbs/hr and 0.4 TPY each. Particulate matter emissions from the clay fines bin are estimated to be 0.14 lbs/hr and 0.6 TPY. The allowable emissions from kiln No. 5 are specified in permit No. AC 10-197099 for baghouse No. 5 (issued April 7, 1993). A determination of Best Available Control Technology (BACT) was not required. The Department is issuing this Intent to Issue for the reasons stated in the Technical Evaluation and Preliminary Determination.

A person whose substantial interests are affected by the Department's proposed permitting decision may petition for an administrative proceeding (hearing) in accordance with Section 120.57, Florida Statutes. The petition must contain the information set forth below and must be filed (received) in the Office of General Counsel of the Department at 2600 Blair Stone Road, Tallahassee, Florida 32399-2400, within 14 days of publication of this notice. Petitioner shall mail a copy of the petition to the applicant at the address indicated above at the

time of filing. Failure to file a petition within this time period shall constitute a waiver of any right such person may have to request an administrative determination (hearing) under Section 120.57, Florida Statutes.

The Petition shall contain the following information; (a) The name, address, and telephone number of each petitioner, the applicant's name and address, the Department Permit File Number and the county in which the project is proposed; (b) A statement of how and when each petitioner received notice of the Department's action or proposed action; (c) A statement of how each petitioner's substantial interests are affected by the Department's action or proposed action; (d) A statement of the material facts disputed by Petitioner, if any; (e) A statement of facts which petitioner contends warrant reversal or modification of the Department's action or proposed action; (f) A statement of which rules or statutes petitioner contends require reversal or modification of the Department's action or proposed action; and (g) A statement of the relief sought by petitioner, stating precisely the action petitioner wants the Department to take with respect to the Department's action or proposed action.

If a petition is filed, the administrative hearing process is designed to formulate agency action. Accordingly, the Department's final action may be different from the position taken by it in this Notice. Persons whose substantial interests will be affected by any decision of the Department with regard to the application have the right to petition to become a party to the proceeding. The petition must conform to the requirements specified above and be filed (received) within 14 days of publication of this notice in the Office of General Counsel at the above address of the Department. Failure to petition within the allowed time frame constitutes a waiver of any right such person has to request a hearing under Section 120.57, F.S., and to participate as a party to this proceeding. Any subsequent intervention will only be at the approval of the presiding officer upon motion filed pursuant to Rule 28-5.207, F.A.C.

The application is available for public inspection during normal business hours, 8:00 a.m. to 5:00 p.m., Monday through Friday, except legal holidays, at:

Department of Environmental Protection
Bureau of Air Regulation
111 S. Magnolia Drive, Suite 4
Tallahassee, Florida 32301

Department of Environmental Protection
Northeast District
7825 Baymeadows Way, Suite B200
Jacksonville, Florida 32256-7577

Any person may send written comments on the proposed action to Mr. Preston Lewis at the Department of Environmental Protection, Mail Station 5505, 2600 Blair Stone Road, Tallahassee, Florida 32399-2400. All comments received within 14 days of the publication of this notice will be considered in the Department's final determination.

Technical Evaluation
and
Preliminary Determination

Florida Solite Company
Clay County
Green Cove Springs, Florida

Baghouse No. 1 Project
File No. AC 10-222486

Department of Environmental Protection
Division of Air Resources Management
Bureau of Air Regulation

May 31, 1994

I. General Information

A. Applicant

Florida Solite Company
P. O. Box 297
Green Cove Springs, Florida 32043

B. Request

On November 30, 1992, Florida Solite Company submitted an application for a permit to construct (alter) kiln Nos. 1 and 1A by installing ducts that would allow the emissions from these kilns to be discharged through the existing baghouse No. 5 (dust collector) that serves kiln No. 5. On September 13, 1993, the application was revised to include a new baghouse (baghouse No. 1) and duct system that would allow any of the three kilns (Nos. 1, 1A, and 5) to discharge to either baghouse. The new baghouse will share the existing lime injection and clay fines system installed with the kiln No. 5 baghouse. Each baghouse will only handle the emissions from one kiln at any one time. Thus, only two kilns will be in operation at one time. The existing scrubbers that service these kilns will be retained but used only when the kilns are firing fossil fuels (natural gas, propane, No. 2 fuel oil or coal). The September 13 application amendment also included the addition of admixtures to the product, a pug mill filter receiver, and a clinker hopper filter receiver to serve all three kilns. The application was considered complete on April 8, 1994 (Koogler's letter dated April 6, 1994). These kilns are located at the lightweight aggregate production facility (SIC 3295) on County Road 209A, north of Green Cove Springs, Clay County, Florida 32043. The UTM coordinates of this site are Zone 17,427.3 km E and 3326.5 km N.

C. Emissions

Particulate matter (PM) emissions from the baghouse serving kilns Nos. 1 and 1A will be 0.08 grains per dry standard cubic foot corrected to 7 percent oxygen (gr/dscf @ 7% O_2). This is the PM standard for boilers and industrial furnaces, (40 CFR 266.105(a)). The maximum allowable PM emissions from each of these kilns will be 11.8 lbs/hr (44.8 TPY). This is estimated to be 4.1 TPY less than the PM emissions from the existing scrubbers. When kiln No. 5 is using baghouse No. 1 the allowable emissions are as specified in the permit for baghouse No. 5 (authorized by permit No. AC 10-197099 issued April 7, 1993).

The lime system (authorized by permit No. AC 10-197099) will be shared with kiln No. 5. PM emissions from the baghouse serving the lime system are expected to be 0.02 gr/dscf, 0.12 lbs/hr, and 0.5 TPY.

The process rate of the clay fines bin (authorized by permit No. AC 10-197099) will increase to 5000 lbs/hr of fines. PM emissions from the baghouse serving the system are expected to be 0.02 gr/dscf, 0.14 lbs/hr, and 0.6 TPY.

The clay fines from the bin will be transferred to either the proposed pug mill receiver or a clinker hopper receiver that will serve all three kilns. The filters for the receiver hoppers for the process equipment will emit 0.02 gr PM/dscf, 0.1 lbs/hr, and 0.4 TPY.

As this permit does not authorize a change in the rates of clay feed, and production of kilns Nos. 1 and 1A, the emissions of sulfur dioxide (SO_2), nitrogen oxides (NO_x), carbon monoxide (CO), and volatile organic compounds (VOC) will not increase. The following table lists the allowable emission of these pollutants.

Maximum allowable emissions from the baghouse serving kiln 1 or 1A shall not exceed any of the following:

Pollutant	Standard	Kiln 1*		Kiln 1A*	
		Lbs/hr	TPY	Lbs/hr	TPY
PM	0.08 gr/dscf @ 7% O_2	11.8	44.8	11.8	44.8
SO_2**	30 day average	84.0	319.2	75.8**	288.0
NO_x		15.3	58.1	14.2	54.0
CO****	100 ppmvd @ 7% O_2	7.5	28.5	7.5	28.5
VOC	20 ppmvd***	5.5	20.9	5.5	20.9
VE	15% opacity	15% opacity		15% opacity	

* 7,600 hrs/yr operation (Specific Condition No. 23 of permit No. AC 10-125262)
**226 lbs SO_2/hr (1 hr. max)
*** Subject to 40 CFR 266.104(f)
****Alternate CO standard allowed under 40 CFR 266

The maximum allowable emissions from baghouse No. 1 when servicing kiln No. 5 are specified in permit No. AC 10-197099.

II. Rule Applicability

The Department of Environmental Protection has concluded that Requirements for the Permitting of Commercial Hazardous Waste Incinerators, Section 403.7869, Florida Statutes, does not apply to this application. The operation of this existing facility, which includes the firing of liquid burnable material (LBM), is not being changed. The proposed modification (installation of a new air pollution control system) will result in a benefit to the environment. The facility is subject to 40 CFR 266, Subpart H, Boilers and Industrial Furnaces regulations, and Chapter 17-730, F.A.C. It must operate in compliance with all requirements of these regulations if it continues to burn LBM.

The proposed project (adding baghouse No. 1, ducts to connect kilns Nos. 1, 1A and 5 with baghouses Nos. 1 and 5, a pug mill receiver, and a clinker hopper receiver) is subject to preconstruction review under the provisions of Chapter 403, Florida Statutes, and Chapter 17-296 and 297, Florida Administrative Code.

The facility is in an area designated as attainment for all criteria pollutants (F.A.C. Rule 17-275.400).

The facility (SIC 3295) is a major source for particulate matter, sulfur dioxide, and nitrogen oxides because the allowable emissions of each of these pollutants exceed 100 TPY.

The project will not result in a significant net emissions increase of any criteria pollutant. Therefore, the project is not subject to the Prevention of Significant Deterioration (PSD) regulations (F.A.C. Rule 17-212.400).

The project is subject to F.A.C. Rule 17-212.300, Sources Not Subject to Prevention of Significant Deterioration or Nonattainment Requirements. The particulate matter, carbon monoxide, volatile organic compounds and visible emission standards shall be set at the rates requested by the applicant. The sulfur dioxide and nitrogen oxides emission standards shall be set at the current permitted rate.

III. Technical Evaluation

The use of up to 500 lbs/hr of admixtures in the kiln will not change the emissions from the facility. No significant operational changes (clay feed, production, or fuel usage) to the kilns are associated with this project. Therefore, the uncontrolled emissions of all air pollutants will not change.

The proposed kiln baghouse No. 1 is more efficient at removing particulate matter (PM) than the existing wet spray scrubber it will replace. The PM collection efficiency of the baghouse exceeds 99 percent. Typical PM collection efficiency of a scrubber is 90 percent. Based on a PM standard of 0.08 gr/dscf @ 7% oxygen, the kilns would be allowed 11.8 lbs/hr of PM emissions. This concentration of PM can be achieved with a baghouse. The allowable emissions from baghouse No. 1 while it is servicing kiln No. 5 are specified in permit No. AC 10-197099.

A heat exchanger is used to lower the temperature of the flue gasses leaving the kiln before they enter the baghouse. A programmable logic controller will shut off the LBM fuel feed to the kiln if the temperature of the flue gasses entering the baghouse exceeds 450°F. The controller also will shut off the LBM fuel feed to the kiln when other operation parameters (fuel flow rate, raw material feed rate, fan pressure, baghouse pressure drop, and CO concentration) are exceeded.

Baghouses will also be employed to control the PM emissions from the pug mill filter receiver and clinker hopper filter receiver. The applicant used an emission concentration of 0.02 gr/dscf to estimate the PM emissions from these receivers. Potential emissions from each of these units are 0.1 lbs/hr and 0.4 TPY.

Both baghouses (existing No. 5 and proposed No. 1) will use the existing lime and clay fines bin system. The amount of clay fines handled by the existing clay fines bin system will increase to 5,000 lbs/hr. The PM emissions from the baghouse serving the clay fines bin will be 0.14 lbs/hr (0.6 TPY).

No baghouse has a bypass stack. Except for fugitive emissions, all contaminated gasses leaving process equipment must pass through a baghouse before being exhausted to the atmosphere. All material captured by the baghouses is incorporated into the product.

Kilns Nos. 1 and 1A are each permitted to process 14.4 TPH wet clay (8.6 TPH dry clay) which will produce 7 TPH of lightweight aggregate. The uncontrolled sulfur dioxide (SO_2) emissions from kiln No. 1A was documented to be 226 lbs/hr (maximum 1 hour emission). The applicant estimates the lime injection system will reduce the SO_2 emissions by 40 percent. Based on this estimate, the Department believes the SO_2 emissions from the kilns will be lower than the current actual emissions. The kilns will be permitted at their current actual sulfur dioxide emission rate and the applicant will be required to document the actual emission rate by use of a continuous emission monitor (CEM).

The estimated nitrogen oxides (NO_x) emission of 15.3 lbs/hr (58.1 TPY) was also based on tests on the similar 7 TPH kiln. The NOx emissions from the kilns will not change. Air pollution control equipment for NO_x is not used on either kiln No. 1 or 1A.

The estimated volatile organic compounds (20 ppm VOC) emissions are 5.5 lbs/hr. Air pollution control equipment for VOC is not used on either kiln No. 1 or 1A.

The estimated carbon monoxide (CO) emissions at 100 ppmvd CO @ 7% O_2 would be 7.5 lbs/hr. The applicant is expected to request an alternate CO emission standard as allowed by 40 CFR 266, Subpart H. Air pollution control equipment for CO is not used on either kiln.

Kilns Nos. 1, 1A, and 5 will also emit some of the metals contained in the liquid burnable material (LBM). The applicant has not been required to measure the current metal emissions. However, the Department will require tests to establish the emissions as a condition to this permit. A specific condition of the proposed permit restricts emissions to a level that will not endanger the public health. The metal emissions are expected to be partially controlled by lime injection and the baghouse filters. Testing

will be conducted to determine control efficiencies and emission rates as required by 40 CFR 266, Subpart H, Boiler and Industrial Furnace regulations. Precompliance certification under these regulations ensures that the facility will not endanger the public health.

Higher emissions could subject the plant to other regulations.

IV. Air Quality Analysis

Since the proposed project does not result in an increase in allowable emissions of any pollutant, the impact of the emissions on the ambient air quality should be the same or, for particulate matter and sulfur dioxides, reduced.

V. Conclusion

Based on the information provided by Florida Solite Company, the Department has reasonable assurance that the addition of a baghouse, dust system, pug mill filter receiver, and clinker hopper filter receiver, as described in this evaluation, and subject to the conditions proposed herein, will not cause or contribute to a violation of any state or national ambient air quality standard, PSD increment, or any other technical provision of Chapter 17-296 of the Florida Administrative Code.

The determination on the applicability of the requirements for the Permitting of Commercial Hazardous Waste Incinerators, Section 403.7869, Florida Statutes, is based on legal and not technical considerations.

Florida Department of
Environmental Protection

Twin Towers Office Building
2600 Blair Stone Road
Tallahassee, Florida 32399-2400

Lawton Chiles
Governor

Virginia B. Wetherell
Secretary

PERMITTEE:
Florida Solite Company
P. O. Box 297
Green Cove Springs, FL 32043

Permit Number: AC 10-222486
Expiration Date: July 1, 1995*
County: Clay
Latitude/Longitude: 30°04'07"N
81°45'17"W
Project: Baghouse No. 1 Project

This permit is issued under the provisions of Chapter 403, Florida Statutes, and Florida Administrative Code Chapters 17-212 and 17-4. The above named permittee is hereby authorized to perform the work or operate the facility shown on the application and approved drawings, plans, and other documents attached hereto or on file with the Department and made a part hereof and specifically described as follows:

Authorization to install: baghouse No. 1, a top load pulse-jet dust collector (or equivalent); heat exchanger; modify the duct systems for kilns Nos. 1, 1A, and 5 to allow any kiln to discharge through either baghouse No. 5 (existing) or baghouse No. 1 (new); a pug mill filter receiver; a clinker hopper filter receiver; pneumatic system to connect the new baghouse to the existing lime and clay fines systems; and associated equipment.

The existing scrubber systems may be used to control the emissions from any of the kilns only when liquid burnable material (LBM) is not being used as fuel by the kiln.

Stack parameters for the sources covered by this permit are:

Stack	Height (ft.)	Diameter (ft.)	ACFM	DSCFM	Temp(°F)
Baghouse No. 1	72	4.33	78,400	40,000	420
Clay Fines Bin (Existing)	52	0.5	900	800	100
Lime Bin (Existing)	65	0.5	722	675	77
Pug Mill Filter Receiver	30	0.42	570	525	80
Clinker Hopper Filter Receiver	30	0.42	570	525	80

The baghouses do not have by-pass stacks. Except for fugitive emissions, all emissions must pass through a baghouse.

Printed on recycled paper.

Baghouse No. 1 and the associated equipment will be located at the permittee's lightweight aggregate manufacturing facility (SIC 3295) on County Road 209A, north of Green Cove Springs, Clay County, Florida 32043. The UTM coordinates of this site are Zone 17, 427.3 km E and 3326.5 km N.

*This permit is void if construction does not commence within 18 months of its issuance, if construction is discontinued for more than 18 months, or if construction is not completed and the plant is not placed in operation within a reasonable time.

The source shall be constructed in accordance with the permit application, plans, documents, amendments and drawings, except as otherwise noted in the General and Specific Conditions.

Attachments are listed below:

1. Application received November 30, 1992.
2. DER's December 22, 1992, letter.
3. Koogler's September 10, 1993, letter.
4. DEP's October 12, 1993, letter.
5. Koogler's December 14, 1993, letter.
6. DEP's January 13, 1994, letter.
7. Koogler's February 17, 1994, letter.
8. Koogler's February 28, 1994, letter.
9. Florida Solite's March 15, 1994, letter.
10. DEP's March 31, 1994, letter.
11. Koogler's April 6, 1994, letter.

GENERAL CONDITIONS:

1. The terms, conditions, requirements, limitations, and restrictions set forth in this permit are "Permit Conditions" and are binding and enforceable pursuant to Sections 403.161, 403.727, or 403.859 through 403.861, Florida Statutes. The permittee is placed on notice that the Department will review this permit periodically and may initiate enforcement action for any violation of these conditions.

2. This permit is valid only for the specific processes and operations applied for and indicated in the approved drawings or exhibits. Any unauthorized deviation from the approved drawings, exhibits, specifications, or conditions of this permit may constitute grounds for revocation and enforcement action by the Department.

3. As provided in Subsections 403.087(6) and 403.722(5), Florida Statutes, the issuance of this permit does not convey any vested rights or any exclusive privileges. Neither does it authorize any injury to public or private property or any invasion of personal rights, nor any infringement of federal, state or local laws or regulations. This permit is not a waiver of or approval of any other Department permit that may be required for other aspects of the total project which are not addressed in the permit.

4. This permit conveys no title to land or water, does not constitute State recognition or acknowledgement of title, and does not constitute authority for the use of submerged lands unless herein provided and the necessary title or leasehold interests have been obtained from the State. Only the Trustees of the Internal Improvement Trust Fund may express State opinion as to title.

5. This permit does not relieve the permittee from liability for harm or injury to human health or welfare, animal, or plant life, or property caused by the construction or operation of this permitted source, or from penalties therefore; nor does it allow the permittee to cause pollution in contravention of Florida Statutes and Department rules, unless specifically authorized by an order from the Department.

6. The permittee shall properly operate and maintain the facility and systems of treatment and control (and related appurtenances) that are installed or used by the permittee to achieve compliance with the conditions of this permit, as required by Department rules. This provision includes the operation of backup or auxiliary facilities or similar systems when necessary to achieve compliance with the conditions of the permit and when required by Department rules.

GENERAL CONDITIONS:

7. The permittee, by accepting this permit, specifically agrees to allow authorized Department personnel, upon presentation of credentials or other documents as may be required by law and at a reasonable time, access to the premises, where the permitted activity is located or conducted to:

a. Have access to and copy any records that must be kept under the conditions of the permit;

b. Inspect the facility, equipment, practices, or operations regulated or required under this permit; and

c. Sample or monitor any substances or parameters at any location reasonably necessary to assure compliance with this permit or Department rules.

Reasonable time may depend on the nature of the concern being investigated.

8. If, for any reason, the permittee does not comply with or will be unable to comply with any condition or limitation specified in this permit, the permittee shall immediately provide the Department with the following information:

a. a description of and cause of non-compliance; and

b. the period of noncompliance, including dates and times; or, if not corrected, the anticipated time the non-compliance is expected to continue, and steps being taken to reduce, eliminate, and prevent recurrence of the non-compliance.

The permittee shall be responsible for any and all damages which may result and may be subject to enforcement action by the Department for penalties or for revocation of this permit.

9. In accepting this permit, the permittee understands and agrees that all records, notes, monitoring data and other information relating to the construction or operation of this permitted source which are submitted to the Department may be used by the Department as evidence in any enforcement case involving the permitted source arising under the Florida Statutes or Department rules, except where such use is prescribed by Sections 403.73 and 403.111, Florida Statutes. Such evidence shall only be used to the extent it is consistent with the Florida Rules of Civil Procedure and appropriate evidentiary rules.

GENERAL CONDITIONS:

10. The permittee agrees to comply with changes in Department rules and Florida Statutes after a reasonable time for compliance, provided, however, the permittee does not waive any other rights granted by Florida Statutes or Department rules.

11. This permit is transferable only upon Department approval in accordance with Florida Administrative Code Rules 17-4.120 and 17-30.300, F.A.C., as applicable. The permittee shall be liable for any non-compliance of the permitted activity until the transfer is approved by the Department.

12. This permit or a copy thereof shall be kept at the work site of the permitted activity.

13. The permittee shall comply with the following:

a. Upon request, the permittee shall furnish all records and plans required under Department rules. During enforcement actions, the retention period for all records will be extended automatically unless otherwise stipulated by the Department.

b. The permittee shall hold at the facility or other location designated by this permit records of all monitoring information (including all calibration and maintenance records and all original strip chart recordings for continuous monitoring instrumentation) required by the permit, copies of all reports required by this permit, and records of all data used to complete the application for this permit. These materials shall be retained at least three years from the date of the sample, measurement, report, or application unless otherwise specified by Department rule.

c. Records of monitoring information shall include:

- the date, exact place, and time of sampling or measurements;
- the person responsible for performing the sampling or measurements;
- the dates analyses were performed;
- the person responsible for performing the analyses;
- the analytical techniques or methods used; and
- the results of such analyses.

14. When requested by the Department, the permittee shall within a reasonable time furnish any information required by law which is

GENERAL CONDITIONS:

needed to determine compliance with the permit. If the permittee becomes aware that relevant facts were not submitted or were incorrect in the permit application or in any report to the Department, such facts or information shall be corrected promptly.

SPECIFIC CONDITIONS:

Construction Requirements

1. The construction of baghouse No. 1, duct system, pug mill filter receiver, clinker hopper filter receiver, material handling systems, and associated equipment shall conform to the plans in the application (F.A.C. Rule 17-4.070).

2. A programmable logic controller shall be installed for each kiln that will allow liquid burnable material (LBM) to be burned only when all of the flue gas from the kiln passes through a kiln's baghouse (dust collector) and both the kiln and the baghouse are operating properly (F.A.C. Rule 17-4.070).

3. A Ramsey belt scale system (or equivalent) to measure the clay input shall be installed to determine the clay feed rate to each kiln while it is in service. Maximum error of the scale shall not exceed 2 percent. A front end loader at this facility shall be equipped with a scale that can be used to measure the production of any kiln (F.A.C. Rule 17-4.070).

4. The permittee shall install, calibrate, operate, and maintain sulfur dioxide, carbon monoxide, and oxygen continuous emission monitors that meet the applicable performance specifications listed in 40 CFR 60, Appendix B (July 1, 1993) on baghouse No. 1. Each kiln will have a recording pyrometer and its operation temperature shall be recorded anytime LBM is used for fuel for the kiln (F.A.C. Rule 17-4.070).

5. The baghouses handling the kilns flue gasses shall be equipped with instruments that continuously record the pressure drop when the units are in operation. The instruments shall be properly calibrated and maintained (F.A.C. Rule 17-4.070).

6. The stack serving baghouse No. 1 shall be equipped with sampling facilities that meet all specifications listed in F.A.C. Rule 17-297.345.

7. The permittee shall install mercury emission control equipment within 12 months of being notified that Maximum Available Control Technology is applicable for this facility (Section 403.7895(4)(b)2, F.S.).

SPECIFIC CONDITIONS:

ALLOWABLE EMISSIONS

8. When baghouse No. 1 is serving kiln No. 5, the emissions shall not exceed any of the limits specified in permit No. AC 10-197099 that was issued for baghouse No. 5 on April 7, 1993. Maximum allowable emissions from either baghouse No. 1 or 5 while it is serving either kiln Nos. 1 or 1A shall not exceed any of the following:

Pollutant	Standard	Kiln 1*		Kiln 1A*	
		Lbs/hr	TPY	Lbs/hr	TPY
PM	0.08 gr/dscf @ 7% O_2	11.8	44.8	11.8	44.8
SO_2**	30 day average	84.0	319.2	75.8	288.0
NO_x		15.3	58.1	14.2	54.0
CO***	100 ppmvd @ 7% O_2	7.5	28.5	7.5	28.5
VOC	20 ppmvd	5.5	20.9	5.5	20.9
VE	15% opacity	15% opacity		15% opacity	

* 7,600 hrs/yr operation (Specific Condition No. 23 of permit No. AC 10-125262 for the construction of kiln No. 1A)
** 226 lbs SO_2/hr (1 hr. max)
(F.A.C. Rule 17-4.070 and 40 CFR 266)
***Alternate CO standard allowed (40 CFR 266)

9. Maximum allowable particulate matter emissions from other baghouses at this facility shall not exceed 5 percent opacity or 0.02 gr/dscf and:

Source	Particulate Matter	
	Lbs/hr	TPY
Clay Fines Bin (existing)	0.14	0.6
Lime Bin (existing)	0.12	0.5
Pug Mill Filter Receiver (new)	0.1	0.4
Clinker Hopper Filter Receiver (new)	0.1	0.4

(F.A.C. Rule 17-297.340(3))

SPECIFIC CONDITIONS:

10. The combined emissions of metals and other air pollutants from all sources at this facility shall not result in ambient air concentrations (predicted by Department approved modeling) that harm or injure human health or welfare, animal, plant, or aquatic life or property. This will be demonstrated by the permittee modeling the maximum emissions of the metals which could be emitted by this facility. This demonstration shall be made using the protocol in attachment 10 of the Air Construction Permit Application for Kilns Nos. 1 and 1A. The modeling results must be approved by the Department. The tested emissions rate shall not exceed the maximum estimated rate that was used to show that ambient concentrations from this facility are less than the Department's annual acceptable ambient concentrations.

Clay feed shall be sampled and analyzed weekly for the Boiler and Industrial Furnace (BIF) metals (40 CFR 261, Appendix 111, Table 2).

The permittee shall document the concentration of polychlorinated biphenyls (PCB's), sulfur, chlorides and BIF metals in the LBM as fired in any kiln. The LBM storage tank feeding the kilns shall be reanalyzed each time LBM is added to it. The maximum concentration of metals in the LBM shall not exceed the concentration allowed under 40 CFR 266, Subpart H, or the following limits (whichever is more restrictive):

Metal	PPM (by weight)
Antimony	5,000
Arsenic	1,000
Barium	500,000
Beryllium	3,000
Cadmium	1,000
Chlorides	34,000
Chromium	10,000
Cr+6	1,000
Lead	50,000
Mercury	0.2
Nickel	5,000
Selenium	5,000
Silver	50,000
Sulfur	20,000
Thallium	2,000

(Section 403.161, F.S.)

SPECIFIC CONDITIONS:

11. Lead emissions from Kiln Nos. 1 and 1A shall not exceed the lesser of 1.9 lbs/hr or one-third of the emissions allowed under the BIF Rule (40 CFR 266.106(d)), whichever is more restrictive. (January 23, 1993, Settlement Agreement for kiln No. 5).

12. The LBM, as burned, shall not contain mercury at concentrations greater than 0.2 mg/l or the concentration allowed under 40 CFR 266, Subpart H, whichever is more restrictive. The permittee shall confirm that the LBM, as burned, does not contain mercury in excess of the most restrictive concentration by sampling and analysis for mercury as required by the BIF Rule (40 CFR 266, Subpart H). The Permittee may burn LBM containing mercury at concentrations greater than 0.2 mg/l only to the extent necessary during stack testing for the purpose of demonstrating BIF Rule compliance, so long as Florida DEP and/or U.S. EPA have been notified (January 23, 1993, Settlement Agreement for kiln No. 5).

13. The operation of this facility shall not result in the emissions of air pollutants which cause or contribute to an objectionable odor. (F.A.C. Rule 17-296.320).

14. Reasonable precautions shall be used to minimize unconfined emissions of particulate matter generated by this operation pursuant to F.A.C. Rule 17-296.310(3). Reasonable precautions shall be defined as the application of dust suppressants to the material/operation listed in the following table when the visible emissions (maximum 6 minute rolling average) exceed the listed opacity:

Material/Operation	Visible Emissions (Opacity)
Raw Clay Feed Area	5
Coal Storage Area and Coal Handling Equipment	10
Discharges of Product from the Kiln into the Product Cooler	10
Handling and Storage of the Product	20

Also, particulate matter collected by the baghouses shall be managed in enclosed tanks, containers, or conveyances so that it is shielded from wind and rain and shall not be placed on the ground prior to its use as a raw material or its incorporation into the aggregate product or its permitted disposal at a facility authorized to handle this material (F.A.C. Rule 17-296.310(3)).

SPECIFIC CONDITIONS:

Operation Requirements

15. Operation of kiln No. 5 with baghouse No. 1 is subject to all conditions in permit No. AC 10-197099 (construction permit for baghouse No. 5) or a valid air operation permit issued pursuant to this permit (F.A.C. Rule 17-4.160).

16. If a kiln is not burning LBM, the emissions may be controlled with its scrubber provided emissions/operations of the kiln/scrubber meet all conditions of the permit and the air regulations (F.A.C. Rule 17-4.070).

17. Kilns Nos. 1 and 1A shall not be in service at the same time. (Application)

18. Each baghouse may only control the emissions from one kiln at a time. (Application)

19. Kilns Nos. 1 and 1A may operate 24 hrs/day, 7 days/week, 52 weeks/year but not over 7,600 hours during any calendar year. (Specific Condition No. 23 of permit No. AC 10-125262 issued January 15, 1987, for the construction of kiln No. 1A)

20. Maximum clay input to kilns 1 or 1A shall not exceed 14.4 TPH (wet) or 8.6 TPH (dry). Admixture (hydrated lime or crushed dolomitic limestone) input shall not exceed 500 lbs/hr. Production shall not exceed 7.0 TPH (dry). (Application)

21. The maximum allowable sulfur content of the fuels and the heat input to kilns Nos. 1 and 1A shall not exceed any of the following:

KILN	MMBTU/HR*	MMBTU/TON PRODUCT	LBM**(GPH)	COAL***(TPH)	NO. 2 OIL****(GPH)	PROPANE(GPH)	NAT. GAS (MMCFH)
1	47.6	6.8	476	1.3	340	520	0.05
1A	47.6	6.8	476	2.0	340	520	0.05

*When fuels are burned in combination, the maximum allowable heat input and sulfur dioxide emission limits for the kiln shall not be exceeded

**Maximum sulfur content of the LBM is 2.0 percent, 0.4 percent (30 day average).

***Maximum sulfur content of the coal is 1.5 percent

****Maximum sulfur content of the No. 2 oil is 0.5 percent and 0.3 percent, annual average.

(Application, existing permits, and F.A.C. Rule 17-4.070)

22. Oldover Corporation, or another facility permitted to manage hazardous waste under the provisions of 40 CFR 260 through 40 CFR 270, must supply all LBM used by Florida Solite Company. The permittee is responsible for the LBM meeting all the requirements of this permit and all applicable state, federal, and local

SPECIFIC CONDITIONS:

regulations. The LBM shall not contain any hazardous waste that is listed for dioxin or derived from the dioxin-listed wastes F020, F021, F022, F023, F026, or F027, as specified in 40 CFR 261, Subpart H, organic cyanides, sulfide, mercaptans, insecticides, pesticides, herbicides, electroplating waste, or radioactive material above the detection level by the appropriate analytical procedure. The LBM can contain up to 5.0 ppm polychlorobiphenyls (PCB) provided all applicable requirements listed in 40 CFR 761 (July 1, 1992) are met. In addition to those conditions required by 40 CFR 761.20, the permittee shall document that the LBM contains less than 5.0 ppm of PCB and has not been mixed with materials containing PCBs in concentrations of 50 ppm or greater. The LBM shall be tested for PCBs by Methods 3665/8080 as described in SW-846, 3rd Edition (1986), update 2 (Nov. 1992), and radioactivity prior to acceptance at the facility. The permittee shall retain the manifest of each LBM shipment or load for 3 years for Department inspection. (January 23, 1993, Settlement Agreement for kiln No. 5).

23. When burning LBM in any kiln at this facility, the kiln baghouse inlet temperature, carbon monoxide, sulfur dioxide, and oxygen concentration of the flue gas shall be continuously monitored downstream of the furnace but prior to release to the atmosphere in the manner prescribed by the Boiler and Industrial Furnace Rule (40 CFR 266, Subpart H). The kiln shall operate at a minimum temperature of 1800°F and at a minimum oxygen level of 6 percent, and a maximum flue gas temperature at the baghouse inlet of 450° F. The concentration of CO in the stack gases shall not exceed a maximum of 100 ppmv on an hourly rolling average basis, corrected to 7% oxygen, unless the permittee complies with the alternative carbon monoxide and hydrocarbon standard prescribed by 40 CFR 266.104(c) and (f) while using a continuous hydrocarbon analyzer. (40 CFR 266, Subpart H)

24. Kiln Nos. 1 and 1A shall achieve a minimum destruction and removal efficiency (DRE) of 99.99% for all organic hazardous constituents when burning hazardous LBM. Compliance with this requirement shall be demonstrated as required by 40 CFR 266.104(a).

<u>Compliance Testing</u>

25. Testing of emissions shall be conducted with the source operating at permitted capacity. Permitted capacity is defined as 90-100 percent of the maximum operating rate allowed by the permit. If it is impracticable to test at permitted capacity, then sources may be tested at less than capacity; in this case subsequent source operation is limited to 110 percent of the test load until a new test is conducted. Once the unit is so limited, then operation at higher capacities is allowed for no more than 15 consecutive days

SPECIFIC CONDITIONS:

for the purposes of additional compliance testing to regain the permitted capacity in the permit. (F.A.C. Rule 17-297.310)

26. Kiln Nos. 1 and 1A shall be tested at a feed rate of 7.7 to 8.6 TPH clay input (dry) within 30 days of placing baghouse No. 1 in service for the following pollutants:

Pollutant	Method* (40 CFR 60, Appendix A, 7/1/91)	Frequency	Comments**
PM	5	Annually	While burning coal or LBM
SO_2	6	Annually	While burning coal or LBM
NOx	7E	Every 5 yrs	
VE	9	Annually	While burning coal or LBM
VOC	25	Every 5 yrs	While burning LBM
BIF Metals	EPA Multi/-Metal sampling train	Annually	While burning LBM
Organic***	VOST	Annually	While burning LBM. Analyze by Method 8240 of SW-846

* Or other methods with DEP approval.

** Annual stack tests shall be conducted on the kiln baghouses Nos. 1 and 5. The specified tests must be conducted while the plant is burning any fuel that has been used for more than 400 hours during the preceding 12 months. Tests shall be conducted on any air pollution control system that is used more than 400 hours during any year following initial testing of the baghouses.

*** Analyze for all volatile organic constituents listed in Method 8240.

(F.A.C. Rule 17-297)

Administrative Requirements

27. Stack test reports which include the emissions, raw material feed rates, fuel type and rate, and clay/fuel analyses shall be submitted to the Northeast District office within 45 days of the test. (F.A.C. Rule 17-297.570)

28. When the Department, after investigation, has good reason (such as complaints, increased visible emissions, or questionable maintenance of control equipment) to believe that any applicable

SPECIFIC CONDITIONS:

emission standard contained in this permit is being violated, it may require the owner or operator of the unit to conduct compliance tests which identify the nature and quantity of pollutant emissions from the source and to provide a report on the results of said tests to the Department. (F.A.C. Rule 17-297.340(2))

29. The Northeast District office shall be notified in writing a minimum of 15 days in advance of any compliance tests to be conducted on this source. (F.A.C. Rule 17-297.340(1)(i))

30. Nothing in this permit shall exempt the permittee from the requirements of 40 CFR 761, Polychlorinated Biophenyls, 40 CFR 266, Subpart H, Hazardous Waste Burned in Boilers and Industrial Furnaces, and Chapter 17-730, F.A.C., Hazardous Waste, or any other requirement outside the purview of the Department's air regulation (F.A.C. Rule 17-296 and 297). The permittee shall obtain such state and federal permits, when applicable, pursuant to any hazardous waste regulation. (F.A.C. Rule 17-4.160)

31. The permittee, for good cause, may request that this construction permit be extended. Such a request shall be submitted to the Bureau of Air Regulation at least 60 days prior to the expiration of the permit (F.A.C. Rule 17-4.090).

32. An application for an operation permit must be submitted to the Northeast District office at least 90 days prior to the expiration date of this construction permit. To properly apply for an operation permit, the applicant shall submit the appropriate application form, fee, certification that construction was completed noting any deviations from the conditions in the construction permit, and compliance test reports as required by this permit (F.A.C. Rules 17-4.055 and 17-4.220). Any operating permit issued shall require an annual operation report be submitted by March 1 of each year. (F.A.C. Rule 17-4.070)

STATE OF FLORIDA DEPARTMENT
OF ENVIRONMENTAL PROTECTION

_____
Virginia B. Wetherell, Secretary

P 872 789 999

Receipt for Certified Mail

No Insurance Coverage Provided
Do not use for International Mail
(See Reverse)

UNITED STATES POSTAL SERVICE

Sent to TONY SAUNDERS	
Street and No. Florida Solite Co	
P.O., State and ZIP Code PO BOX 297 GREEN COVE SPRINGS 32043	
Postage	$ 1.44
Certified Fee	1.—
Special Delivery Fee	
Restricted Delivery Fee	
Return Receipt Showing to Whom & Date Delivered	1.—
Return Receipt Showing to Whom, Date, and Addressee's Address	
TOTAL Postage & Fees	$ 3.44
Postmark or Date JUN 11 1994 TAMPA, FL USPS	

PS Form **3800**, JUNE 1991

RECEIVED
JUN 20 1994
Bureau of Air Regulation

SENDER:
- Complete items 1 and/or 2 for additional services.
- Complete items 3, and 4a & b.
- Print your name and address on the reverse of this form so that we can return this card to you.
- Attach this form to the front of the mailpiece, or on the back if space does not permit.
- Write "Return Receipt Requested" on the mailpiece below the article number.
- The Return Receipt will show to whom the article was delivered and the date delivered.

I also wish to receive the following services (for an extra fee):
1. ☐ Addressee's Address
2. ☐ Restricted Delivery

Consult postmaster for fee.

3. Article Addressed to:
Mr. Tony Saunders
Plant Manager
Florida Solite Company
P.O. Box 297
Green Cove Spring, FL 32043

4a. Article Number P 872 789 999

4b. Service Type
☐ Registered ☐ Insured
☑ Certified ☐ COD
☐ Express Mail ☐ Return Receipt for Merchandise

7. Date of Delivery JUN 14 1994
GREEN COVE SPRING FL 32043 USPS

8. Addressee's Address (Only if requested and fee is paid)

5. Signature (Addressee)

6. Signature (Agent)

PS Form **3811**, December 1991 ☆U.S. GPO: 1992—323-402 **DOMESTIC RETURN RECEIPT**

Is your **RETURN ADDRESS** completed on the reverse side?

Thank you for using **Return Receipt Service.**

Northeast Region

Bernard V. Gregory
President

Michele Vicari-Christensen,
R.N., M.S., C.C.R.N.
Past President

Cynthia Owens Hammer
Regional Director

5526 Arlington Road
P.O. Box 8127
Jacksonville, FL 32239
Phone: (904) 743-2933
(800) 940-2933
FAX: (904) 743-2916

AMERICAN LUNG ASSOCIATION®
of Florida, Inc.

RECEIVED
MAY 9 1994
Bureau of
Air Regulation

May 6, 1994

Mr. Willard Hanks
Engineer IV
Florida Department of
Environmental Protection
2600 Blair Stone Road
Tallahassee, FL 32399-2400MS5505

Dear Willard:

Thank you for discussing with me the other day the Florida Solite cement kiln in Green Cove Springs.

aggugate?

As we discussed on the phone, I was interested in finding more information on the cement kiln to determine whether we should apply for a grant. From our conversation, I gathered from you that Florida Solite was not creating an environmental concern to warrant us to seek monies to help educate the local community.

Again, I appreciate the time you spent with me and explaining the situation.

Sincerely,

Cindy Owens Hammer
Regional Director

cc: Howard Rhodes

When You Can't Breathe, Nothing Else Matters®

Founded in 1916, the American Lung Association of Florida, Inc. includes affiliated associations throughout the state and a medical section, the Florida Thoracic Society.

KOOGLER & ASSOCIATES
ENVIRONMENTAL SERVICES
4014 NW THIRTEENTH STREET
GAINESVILLE, FLORIDA 32609
904/377-5822 ▪ FAX 377-7158

RECEIVED
APR 08 1994
Bureau of
Air Regulation

KA 150-90-07

April 6, 1994

Mr. John C. Brown, Jr.
Florida Department of
Environmental Protection
Twin Towers Office Building
2600 Blair Stone Road
Tallahassee, Florida 32399-2400

Subject: Submittal of Additional Information
Florida Solite Company
Baghouse and Ducting for Kilns 1 and 1A
Permit File No. AC10-222486

Dear Mr. Brown:

This is in response to your letter dated March 31, 1994, requesting additional information on the above project. It is our understanding from discussions between Florida Solite and FDEP staff that the purpose for the request for additional information was to make sure that the proposed construction would not interfere with the possible future applicability of Maximum Achievable Control Technology (MACT) for mercury to the facility.

As stated in my letter to you dated February 28, 1994, Florida Solite will test all waste material prior to burning to confirm that the mercury level is below the Toxicity Characteristic Level established for mercury by the U.S. EPA. Further, as stated in the same letter, Florida Solite takes the position that a MACT determination is not appropriate for this facility.

However, without waiving any of its rights concerning the applicability of MACT to this facility, Florida Solite can assure the Department that there is nothing in the proposed design or construction contemplated by this permit which would in any way interfere with the addition of control technology or with limitations on waste input which might be required to achieve MACT for mercury. Should it be determined at a later date that MACT applies, nothing in this construction permit would preclude the addition of whatever equipment might be necessary to achieve MACT.

If there are any questions, please do not hesitate to give Pradeep Raval or myself a call.

Very truly yours,

KOOGLER & ASSOCIATES

John B. Koogler, Ph.D., P.E.

JBK:TM:wa

c: Mr. J. Braswell, OGC, FDEP
Mr. W. Congdon, OGC, FDEP
Mr. T. Saunders, Solite
Mr. G. Franklin, Solite
Mr. S. Holt, Solite
Mr. G. Eure, Solite
Mr. J. Jewett, Solite
Mr. A. Galliano, Oldover
Mr. T. Maurer, Foley & Lardner
H. Handa
E. Brey, NE District.
G. Rudell
CNF/JB/PL

KOOGLER & ASSOCIATES

FLORIDA SOLITE® COMPANY

P. O. BOX 297 ∘ GREEN COVE SPRINGS ∘ FLORIDA 32043 AREA CODE 904 284-9271

RECEIVED
MAR 21 1994
Bureau of Air Regulation

March 15, 1994

CERTIFIED MAIL: Return
Receipt P 331 006 859

Mr. John C. Brown, Jr.
Florida Department of Environmental Protection
Twin Towers Office Building
2600 Blair Stone Road
Tallahassee, Fl. 32399-2400

Re: Florida Solite Company
Baghouse and Ducting for Kilns 1 and 1A
Permit No. AC10-222486

Dear Mr. Brown:

Please find enclosed a copy of the proof of publication of the Notice of Permit Application as requested for the above referenced permit application.

If you have any further questions please call me at 269-6206

Sincerely,

Tony Saunders

Tony Saunders

cc: M. Harris
J. Cole, NE Dist.
J. Bradwell, OGC
CMF/SB/PC

Printed on Recycled Paper

STATE OF FLORIDA
DEPARTMENT OF ENVIRONMENTAL PROTECTION

ROUTING AND TRANSMITTAL SLIP

TO: (NAME, OFFICE, LOCATION)

1. Clair Fancy CF 3/22
2. John Brown JB 3/23
3. Preston Lewis
4. Patty — INFO

Willard — use

For your information

was glad to know status, as Howard asked me last night. Clair

FROM:

DATE 3/22/94

PHONE

08-18-93

Clay Today

Best Available Copy

Published Daily Except Sunday and Monday
Orange Park, Florida

STATE OF FLORIDA
COUNTY OF CLAY:

Before the undersigned authority personally appeared Carl Ferrer, who on oath says that he is the Publisher of the "Clay Today," a newspaper published daily except Sundays and Mondays at Orange Park in Clay County, Florida; that the attached copy of advertisement being a

Notice of Application

in the matter of Re: Florida Solite Company to install a baghouse'

No 932

was published in said newspaper in the issues of March 9, 1994

Affiant further says that said "Clay Today" is a newspaper published at Orange Park, in said Clay County, Florida and that the said newspaper has heretofore been continuously published in said Clay County, Florida, each day except Sunday and Monday, and has been entered as second class mail matter at the post office in Orange Park, in said Clay County, Florida for a period of one year next preceding the first publication of the attached copy of advertisment; and affiant further says that he has neither paid nor promised any person, firm or corporation any discount, rebate, commission or refund for the purpose of securing this advertisement for publication in the said newspaper.

Sworn to and subscribed
before me this 11th day of March A.D. 19 94

NOTARY PUBLIC, STATE OF FLORIDA

APRIL E. CRUCE
Notary Public, State of Florida
Commission No. CC 306106
My Commission Expires 8/5/97
Bonded Through Fla. Notary Service & Bonding Co.

STATE OF FLORIDA
DEPARTMENT OF
ENVIRONMENTAL
PROTECTION

NOTICE OF APPLICATION

The Department of Environmental Protection announces receipt of an application for permit from Florida Solite Company to install a baghouse, lime injection system and necessary ducting, as an alternate pollution control device to the existing scrubbers for Kilns 1 and 1A, when burning LBM (liquid hazardous and non-hazardous waste-derived fuel) containing no more than 5 ppm PCBs. This proposed project will be located at Florida Solite Company's existing facility in Green Cove Springs, Clay County, Florida This application is being processed and will be available for public inspection during normal business house, 8:00 a.m. to 5:00 p.m., Monday through Friday, except legal holidays at the Department's Northeast District Office, 7825 Baymeadows Way, Suite B-200, Jacksonville, Florida 32256; and at the Department's Bureau of Air Regulation, 111 S. Magnolia Park Courtyard, Tallahassee, Florida 32301.

Legal no 932 Published Wednesday, March 9, 1994 in Clay County's daily Clay Today Newspaper.

9, 1564 Kingsley Avenue • Orange Park, Florida 32073
Telephone (904)264-3200

KOOGLER & ASSOCIATES
ENVIRONMENTAL SERVICES
4014 NW THIRTEENTH STREET
GAINESVILLE, FLORIDA 32609
904/377-5822 ▪ FAX 377-7158

KA 150-90-07

February 28, 1994

RECEIVED
MAR 1 1994
Bureau of
Air Regulation

VIA FEDERAL EXPRESS

Mr. John C. Brown, Jr.
Florida Department of
Environmental Protection
Twin Towers Office Building
2600 Blair Stone Road
Tallahassee, FL 32399-2400

Subject: Submittal of Additional Information
Florida Solite Company
Baghouse and Ducting for Kilns 1 and 1A
Permit File No. AC10-222486

Dear Mr. Brown:

This is a response to your letter dated January 13, 1994, requesting additional information on the above project. The following responses are in the order of the questions raised by FDEP.

1. The Department has concluded that Requirements for the Permitting of Commercial Hazardous Waste Incinerators applies to this project. Section 403.7869(2), Florida Statutes (F.S.). This law prohibits the Department from issuing any permit for this project until all the requirements of Section 403.7895, F.S., are satisfied.

   a. Please provide a Certification of Need for this project. Section 403.7895(3), F.S. The Department will continue processing your application without the Certification of Need but will be unable to deem your application complete until a Certification of Need issued by the Governor and Cabinet sitting as the Statewide Multipurpose Hazardous Waste Facility Siting Board is provided.

   b. Please provide the cumulative impacts (inhalation, ingestion, skin contact) upon human health and the environment from the potential emissions of the facility. Section 403.7895(4)(a), F.S.

c. **Please describe the procedures that ensure that wastes classified by the United State Environmental Protection Agency as containing organic mercury are not accepted by Florida Solite Company for treatment. Section 403.7895(4)(b)1, F.S.**

d. **Please propose a Maximum Achievable Control Technology (MACT) for the control of mercury emissions from the kilns. Section 403.7895(4)(b)2, F.S.**

RESPONSE:

Subsequent to the receipt of your letter, representatives of Florida Solite have met with FDEP officials to discuss the applicability of F.S. § 403.7895 to this project. We believe that the information that we have provided in connection with such meetings, regarding the permit status of Kilns 1 and 1A as of May 12, 1993, together with information brought to the attention of the Department regarding the language and legislative intent of § 403.7895, establish that this project, which would not increase the permitted burning capacity of Florida Solite, is not subject to requirements of § 403.7895. Florida Solite had all necessary permits and was legally authorized to burn hazardous waste derived fuel prior to the effective date of § 403.7895.

Kilns 1 and 1A both were permitted to burn hazardous waste derived fuel on and before May 12, 1993. Kiln No. 1's Air Permit, No. A010-216998 (originally issued for hazardous waste derived fuel in 1983; most recently revised 4/6/93) provides in Specific Condition 1 that hazardous waste fuel (LBM) can be burned in accordance with the Federal Boiler and Industrial Furnace Regulations (BIF). Kiln No. 1A's Air Permit, No. A010-133604, issued 2/1/91, also authorizes the burning of hazardous waste derived fuel in Specific Conditions 1 and 9. Both of these operating permits continue in effect.

In compliance with the BIF rule, Florida Solite submitted a notification of hazardous waste activity on May 27, 1991, a Part A permit application on August 20, 1991, and a Certification of Precompliance for Kilns 5, 1, and 1A on August 20, 1991. U.S. EPA, by letter dated September 27, 1991, confirmed that the kilns had "interim status." U.S. EPA Region IV called for the Part B permit application on October 2, 1991, and it was submitted by Florida Solite on April 23, 1992.

The BIF Rule was issued pursuant to the Hazardous and Solid Waste Amendments of 1984 and, therefore, was immediately effective in Florida and is administered by U.S. EPA until state authorization is granted. Florida has not received authorization to administer the BIF program and, under the Memorandum of Agreement (MOA) between Florida and EPA, EPA is responsible for permitting and enforcement of the BIF requirements (see Section VB of the MOA). Florida Solite has taken all necessary steps to

maintain its interim status and to fully comply with BIF requirements.

Florida Solite is also subject to the Industrial Wastewater Permit No. I010-180900 (replacing Permit No. I010-086127). This permit and the permit it replaced specifically allow the burning of "waste solvents and waste oils" while operating on the wet scrubbers.

In 1991, Florida Solite temporarily ceased burning hazardous waste fuel in its kilns, including 1 and 1A. EPA had determined that the wastewater generated by the wet scrubbers no longer qualified for "Bevill status," an exemption from regulation as hazardous waste. Although Florida Solite could have continued to burn hazardous waste by sending wastewater off-site for treatment, as has been done at other facilities, the Company determined that the cost of managing such water either on-site or off-site would increase substantially. The BIF requirements that were about to go into effect would also have imposed additional operating costs if wet scrubbers were used. At that same time, the construction business was in a deep recession and Florida Solite was able to meet the demand for lightweight aggregate at a low rate of production. Florida Solite was also able to continue to serve the Florida generators of waste fuel through affiliated companies. Finally, Florida Solite knew that it was able to qualify for interim status under BIF and could resume burning waste fuel without obtaining any additional permits. Because it was clear that the new baghouse technology was superior to the wet scrubber technology, it was expected that the permitting process would move quickly and the period of transition when the company would not be burning would be brief. For all these reasons, Kiln Nos. 1 and 1A were existing capacity with permits allowing the burning of hazardous waste derived fuel as of the date the Moratorium went into effect and, therefore, are not subject to the Moratorium.

Section 403.7895(2) provides that the law applies to all applications for hazardous waste incinerators for which a permit was not issued prior to May 12, 1993. As set forth above, Florida Solite not only had "a permit," but Kilns 1 and 1A had all necessary permits and legal authority to burn hazardous waste fuels under the air, hazardous waste, and water programs. The statutory language clearly refers to applications for permits that would establish a legal right to burn where such a right did not previously exist, or to increase capacity. The subject permit application does not request any increase in the capacity of the facility to burn waste, but rather, merely seeks to install new air pollution controls which will make the already existing ability to burn more economical and environmentally protective.

Although the Moratorium requirement are clearly inapplicable, we will attempt to address the substantive concerns reflected in Items a-d.

a. Florida Solite is not seeking to increase existing capacity, but rather to upgrade the pollution control system for a unit that currently is, and has been, permitted to burn hazardous waste derived fuel without changing the character or quantity of the fuel allowed to be burned.

b. The Federal Boiler and Industrial Furnace regulations, with which Florida Solite has complied, require a demonstration that emissions from the facility are below levels deemed protective of public health by U.S. EPA. In addition, U.S. EPA has notified Florida Solite that, as part of the "Part B" permitting process now underway, EPA will perform an indirect risk assessment of the facility.

c. Under BIF regulations, Florida Solite must continuously monitor the level of mercury in the waste fuel delivered to each kiln. This requires prior sampling and analysis of each "burn tank" before material can be transferred to the kiln. No material will be burned unless Florida Solite has confirmed beforehand by testing that the mercury level is below the Toxicity Characteristic level for mercury established by U.S. EPA.

d. Unlike municipal waste and other solid waste incinerators, Florida Solite's fuel is a relatively homogenous liquid and mercury concentrations can and will be confirmed prior to burning. Therefore, a MACT determination is inappropriate and unnecessary.

2. **Please publish and provide the Department with proof of publication of the Notice of Application pursuant to Section 403.815, F.S. which takes precedence over Florida Administrative Code Rule 17-103.150.**

RESPONSE:

The Notice of Application, submitted for FDEP approval, is expected to be published in the second week of March, 1994. Proof of Publication will be submitted to the Department.

3. **Although the proposed baghouse will probably reduce the emissions of many air pollutants, the emissions of some air pollutants have the potential to increase because of the higher operating temperature of the baghouse when compared to the scrubbers. Please address the change in actual emissions of metals, soluble material, and condensable material (acid gases and organic compounds) that will result if the scrubbers are replaced with baghouses.**

RESPONSE:

The removal efficiencies of baghouses and scrubbers are a function of temperature, sorption efficiency and the particle removal efficiency of the control device. Granted, the operating temperature of a baghouse is higher than the operating temperature of a scrubber but the particle removal efficiency of the proposed baghouse is much superior to the efficiency of the scrubber that it is being substituted for.

The change in actual emissions of metals, soluble material, and condensable material (acid gases and organic compounds) resulting from using a baghouse in place of a scrubber can be evaluated by comparing emission measurements or operating conditions (e.g. permit limits, air pollution control efficiencies, etc.).

The existing information on metals and total hydrocarbon emissions from the Florida Solite kilns is presented in Attachment 1. Although the tabulated information is for Kiln 5, which has a higher production capacity than Kilns 1/1A, the data are indicative of the emission pattern expected for Kilns 1 and 1A. The emissions comparison in Attachment 1 indicates lower metals and hydrocarbon emissions from the use of a baghouse as compared to the use of the existing scrubber.

In the case of acid gases, the existing information on the scrubber removal efficiency can be used to estimate emissions (see Attachment 2). The emissions comparison in Attachment 2 indicates lower emissions when using a baghouse.

FDEP has reviewed and issued a construction permit for a baghouse for Kiln 5. The lower emissions resulting from the use of this baghouse justify FDEP's conclusion that the use of a baghouse is more environmentally beneficial than the use of a scrubber. Since Kilns 1/1A are similar to Kiln 5, FDEP should reach a similar conclusion in this case.

4. Please perform any additional modeling required if the response to question 3 generates a need for modeling.

RESPONSE:

As the modeling submitted to FDEP was conducted with the proposed conditions, based on the use of a baghouse, no additional modeling is required.

5. Please describe the provisions made for the installation of sulfur dioxide continuous emissions monitors in the stacks.

RESPONSE:

The Kiln 5 baghouse stack is equipped with a continuous emission monitor (CEM) for sulfur dioxide. The proposed Kiln 1/1A baghouse stack will also be equipped with an equivalent, if not identical, sulfur dioxide CEM. The CEM will be installed in accordance with the Installation and Measurement Location Specifications in 40 CFR 60, Appendix B.

6. Please amend the application to include the use of admixtures (additive that improves handling of the product).

RESPONSE:

Admixtures are added to the hot end of the kiln to enhance product handling on a "when and as needed basis." The admixtures are used when the product handling is difficult due to excessive agglomeration. At this time the list of admixtures include inorganic agents, such as hydrated lime or crushed dolomitic limestone. The maximum utilization rate for any admixture is 500 pounds per hour. The lime will be transferred (a) directly to the hot end of kiln via an enclosed conveying system; or, (b) to the coal feed system (when not burning coal) for introduction into the hot end of the kiln, via an enclosed conveying system. As both approaches will utilize enclosed conveying systems, fugitive dust will not be generated. Any admixture contribution to the particulate matter in the kiln exhaust will be controlled by the kiln baghouse. Therefore, no increase in emissions are expected from the use of admixtures.

Revised pages 4a and 4b of the permit application form are provided, as requested by FDEP, in Attachment 3. Florida Solite will submit a request for FDEP approval, if required, prior to the use of any other admixtures.

7. You noted that "Continued use of the wet scrubber would not allow for a comfortable margin of safety, and would make it more burdensome to operate the kilns in full compliance on a routine basis." The Department does not have reasonable assurance that these kilns can now operate in compliance with the 40 CFR 266, Subpart H - Hazardous Waste Burned in Boiler and Industrial Furnaces. Please address this concern.

RESPONSE:

U.S. EPA has confirmed that Kilns 1 and 1A have interim status under 40 CFR 266, Subpart H, and Florida Solite has taken all steps necessary to maintain compliance with BIF requirements. If Florida Solite utilized the existing wet scrubbers to operate under BIF, the higher particulate emissions would result in the use of a higher percentage of its allowable emissions under BIF than would be the case with a baghouse system. Also, scrubber wastewater would have to be sent off-site for treatment at greater expense. However, Florida Solite currently has all necessary permits to operate under BIF using the wet scrubbers. Our capacity to do so is supported by the data contained in Response No. 3 and previous submissions to the Department.

If there are any questions, please do not hesitate to give Pradeep Raval or myself a call.

Very truly yours,

KOOGLER & ASSOCIATES

John B. Koogler, Ph.D., P.E.

JBK:PAR:wa

c: Mr. J. Braswell, OGC, FDEP
Mr. W. Congdon, OGC, FDEP
Mr. T. Saunders, Solite
Mr. G. Franklin, Solite
Mr. S. Holt, Solite
Mr. G. Eure, Solite
Mr. J. Jewett, Solite
Mr. A. Galliano, Oldover
Mr. T. Maurer, Foley & Lardner
T. Hanks
D. Cole, DE Dist
CHF/JBIPL

ATTACHMENT 1

COMPARISON OF EMISSION MEASUREMENTS
ON SCRUBBER AND BAGHOUSE

FLORIDA SOLITE
GREEN COVE SPRINGS, FLORIDA

POLLUTANT	EMISSION RATE SCRUBBER (lb/hr)	EMISSION RATE BAGHOUSE (lb/hr)	EMISSION CHANGE USING BAGHOUSE (Increase/Decrease)
Antimony	0.01851	4.81E-5	Decrease
Arsenic	0.01593	2.74E-4	Decrease
Barium	0.10797	1.69E-3	Decrease
Beryllium	0.00011	2.24E-6	Decrease
Cadmium	0.00847	3.03E-4	Decrease
Chromium Total	0.30389	7.19E-4	Decrease
Chromium +6	0.015 (1)	1.1E-4	Decrease
Lead	0.29332	1.02E-3	Decrease
Mercury	0.00292	7.29E-4	Decrease
Nickel	0.11421	5.04E-4	Decrease
Selenium	0.00574	6.05E-5	Decrease
Silver	0.00448	2.84E-5	Decrease
Thallium	0.00057	6.05E-5	Decrease
Total Hydrocarbons	2.6	1.7	Decrease

NOTES:

(1) Based on maximum expected chromium +6 in total chromium emissions.

(2) The above information is from Kiln 5 performance tests with scrubber and baghouse. Although Kilns 1/1A have lower production capacities, they are similar to Kiln 5; therefore, the emission patterns are expected to be the same. Parameters from the Kiln 5 tests are as follows:

	SCRUBBER	BAGHOUSE
Date of Test	3/28/91	12/16/93
Mat'l Feed	20.3 tph	19.8 tph
Fuel	LBM	LBM (spiked As, Be, Cd, Cr+6)
Stk. Gas Flow	16108 dscfm	19,228 dscfm
Temp.	136.5 F	363.3 F

KOOGLER & ASSOCIATES

ATTACHMENT 2

ACID GAS EMISSIONS COMPARISON
FOR SCRUBBER AND BAGHOUSE

FLORIDA SOLITE COMPANY
GREEN COVE SPRINGS, FLORIDA

POLLUTANT	ESTIMATED EMISSIONS SCRUBBER (lb/hr)	ESTIMATED EMISSIONS BAGHOUSE (lb/hr)	CHANGE IN EMISSIONS USING BAGHOUSE Increase / Decrease
Nitrogen Oxides	9.2 (1)	8.6 (2)	Decrease
Sulfur Dioxide	116.4 (1)	94.1 (2)	Decrease
Other Acid Gas (3)	23% eff.	40% eff.	Decrease

NOTES:

(1) Based on Kiln 1A scrubber test on 4/30/90.

(2) Based on Kiln 5 baghouse test on 2/17/94.

(3) No accurate emission data are available for acid emissions as significant interference has been encountered while using the EPA reference measurement methods. However, the acid gas removal efficiency of the scrubber is estimated based on available scrubber water titration data and corresponding sulfur dioxide emissions. The acid gas removal efficiency of the dry scrubber/baghouse is estimated to be 40% from lime injection.

KOOGLER & ASSOCIATES

ATTACHMENT 3

REVISED PAGES 4a and 4b OF 12 OF PERMIT APPLICATION FORM
TO INCLUDE ADMIXTURES

KOOGLER & ASSOCIATES

KILN 1

SECTION III: AIR POLLUTION SOURCES & CONTROL DEVICES (Other than Incinerators)

A. Raw Materials and Chemicals Used in your Process, if applicable:

Description	Contaminants		Utilization Rate - lbs/hr	Relate to Flow Diagram
	Type	% Wt		
Wet Clay	-	-	28,800	
Admixtures *			500	
* Hydrated lime, crushed limestone added when needed to improve product handling.				

B. Process Rate, if applicable: (See Section V, Item 1)

1. Total Process Input Rate (lbs/hr): 17,200 (dry basis)

2. Product Weight (lbs/hr): 14,000

C. Airborne Contaminants Emitted: (Information in this table must be submitted for each emission point, use additional sheets as necessary)

Name of Contaminant	Emission[1]		Allowed[2] Emission Rate per Rule 17-2	Allowable[3] Emission lbs/hr	Potential[4] Emission		Relate to Flow Diagram
	Maximum lbs/hr	Actual T/yr			lbs/Hr	T/yr	
Part. Matter	11.8	51.5	-	-	490.0	2146.2	
SO_2 (avg)	84.0	367.9	-	-	84.0	367.9	
NOx	15.3	67.0	-	-	15.3	67.0	
CO	7.5	32.8	-	-	7.5	32.8	
VOC	11.0	48.1	-	-	11.0	48.1	

[1]See Section V, Item 2.

[2]Reference applicable emission standards and units (e.g. Rule 17-2.600(5)(b)2. Table II, E. (1) - 0.1 pounds per million BTU heat input)

[3]Calculated from operating rate and applicable standard.

[4]Emission, if source operated without control (See Section V, Item 3).

Revised 2/25/94

KILN 1A

SECTION III: AIR POLLUTION SOURCES & CONTROL DEVICES (Other than Incinerators)

A. Raw Materials and Chemicals Used in your Process, if applicable:

Description	Contaminants		Utilization Rate - lbs/hr	Relate to Flow Diagram
	Type	% Wt		
Wet Clay	-	-	28,800	
Admixtures *			500	

*Hydrated lime, crushed limestone added when needed to improve product handling.

B. Process Rate, if applicable: (See Section V, Item 1)

1. Total Process Input Rate (lbs/hr): 17,200 (dry basis)

2. Product Weight (lbs/hr): 14,000

C. Airborne Contaminants Emitted: (Information in this table must be submitted for each emission point, use additional sheets as necessary)

Name of Contaminant	Emission[1]		Allowed[2] Emission Rate per Rule 17-2	Allowable[3] Emission lbs/hr	Potential[4] Emission		Relate to Flow Diagram
	Maximum lbs/hr	Actual T/yr			lbs/hr	T/yr	
Part. Matter	11.8	44.7	-	-	490.0	1862.0	
SO_2 (avg)	75.8	288.0	-	-	75.8	288.0	
NOx	14.2	54.0	-	-	14.2	54.0	
CO	7.5	28.4	-	-	7.5	28.4	
VOC	11.0	41.7	-	-	11.0	41.7	

NOTE: Annual emissions are based on 7600 hrs/yr operation.

[1]See Section V, Item 2.

[2]Reference applicable emission standards and units (e.g. Rule 17-2.600(5)(b)2. Table II, E. (1) - 0.1 pounds per million BTU heat input)

[3]Calculated from operating rate and applicable standard.

[4]Emission, if source operated without control (See Section V, Item 3).

Revised 2/25/94

KOOGLER & ASSOCIATES
ENVIRONMENTAL SERVICES
4014 NW THIRTEENTH STREET
GAINESVILLE, FLORIDA 32609
904/377-5822 ▪ FAX 377-7158

KA 150-90-07

February 17, 1994

RECEIVED

FEB 24 1994

Bureau of
Air Regulation

Mr. John C. Brown, Jr.
Florida Department of
Environmental Protection
Twin Towers Office Building
2600 Blair Stone Road
Tallahassee, FL 32399-2400

Subject: Notice of Application
Florida Solite Company
Baghouse and Ducting for Kilns 1 and 1A
Permit File No. AC10-222486

Dear Mr. Brown:

Enclosed is a draft of the Notice of Application for the above referenced project. Florida Solite will publish this notice as requested in your letter dated January 13, 1994. A response to the other issues raised in your letter is being prepared.

If you have any questions or comments, please let me know prior to March 3, 1994, as the notice is scheduled to be published in the subsequent week.

Very truly yours,

KOOGLER & ASSOCIATES

John B. Koogler, Ph.D., P.E.

JBK:par
Enc.

c: J. Braswell, OGC, FDEP
T. Saunders, Solite
G. Franklin, Solite
S. Holt, Solite
G. Eure, Solite
J. Jewett, Solite
A. Galliano, Oldover
T. Maurer, Foley & Lardner
T. Hands
G. Cole, NED
CHF/SB/PL

STATE OF FLORIDA
DEPARTMENT OF ENVIRONMENTAL PROTECTION

ROUTING AND TRANSMITTAL SLIP

TO: (NAME, OFFICE, LOCATION)

1. ~~Clair Fancy~~ CHF
2. ~~John Brown~~ JB
3. ~~Preston Lewis~~
4. ~~[illegible]~~ Preston

Do we need to do anything on this? JB

(1) Joby B This is a file item

Preston

(2) ~~[illegible]~~

(2) Patty adams

FROM:

DATE 2/24/94

PHONE

08-18-93

STATE OF FLORIDA
DEPARTMENT OF ENVIRONMENTAL PROTECTION
NOTICE OF APPLICATION

The Department of Environmental Protection announces receipt of an application for permit from Florida Solite Company to install a baghouse and necessary ducting, as an alternate pollution control device to the existing scrubbers, for Kilns 1 and 1A. This proposed project will be located at Florida Solite Company's existing facility in Green Cove Springs, Clay County, Florida. This application is being processed and will be available for public inspection during normal business hours, 8:00 a.m. to 5:00 p.m., Monday through Friday, except legal holidays, at the Department's Northeast District Office, 7825 Baymeadows Way, Suite B-200, Jacksonville, Florida 32256; and, at the Department's Bureau of Air Regulation, 111 S. Magnolia Park Courtyard, Tallahassee, Florida 32301.

KOOGLER & ASSOCIATES

Best Available Copy

2/15 Willard Clair FYI Howard John

RECEIVED
FEB 15 1994
Division of Air Resources Management

Florida House of Representatives

John Thrasher
Representative, 19th District

Reply to:
☐ Suite 108
859 Park Avenue
Orange Park, FL 32073
(904) 269-4434
☐ 207 House Office Building
Tallahassee, FL 32399-1300
(904) 488-1304

February 1, 1994

Committees
Education
Governmental Operations
Tourism & Economic Development
Select Committee on Agency Rules

RECEIVED
FEB 15 1994
Bureau of Air Regulation

DEPARTMENT OF ENVIRONMENTAL PROTECTION
FEB 08 1994
OFFICE OF THE SECRETARY

The Honorable Virginia Wetherell
Secretary, Florida Department
of Environmental Protection
2600 Blair Stone Road
Tallahassee, FL 32399-2400

Dear Secretary Wetherell:

We were surprised to learn recently that the Department of Environmental Protection may take the position that the Florida Solite facility in Clay County, a county that we represent, is subject to the incinerator moratorium that was enacted in the last legislative session. It was our understanding that the moratorium was intended to apply to proposed incinerators and not to Florida Solite.

For many years, Florida Solite has burned liquid, high-btu waste fuel as a source of energy for its industrial furnaces. We have not received any complaints about the plant from the community in which it operates. It is our understanding that Florida Solite has had operating permits allowing it to burn waste fuel for many years. The company also has a fully permitted storage facility dedicated to the management of the waste fuel. U.S. EPA, which administers regulations specifically applicable to Florida Solite and other industrial furnaces, has granted the company an "interim status" authorization to burn waste fuel.

In addition, Florida Solite has recently made a very substantial investment in a new pollution control system and monitoring and testing equipment, which is now fully operational. The company was granted a construction permit for this equipment prior to the enactment of the moratorium. If Florida Solite should be subjected to the moratorium, jobs would be lost, the company would suffer great economic damage, and Florida companies would be required to send waste out of state at substantial expense. Placing Florida Solite under the moratorium would be contrary to both the literal language of the moratorium law and the intent of the legislature as we understood it. We urgently request that you reconsider your position on this issue.

Sincerely,

Ander Crenshaw
Senator, 6th District

John Thrasher
Representative, 19th District

Printed on Recycled Paper

Memorandum

Florida Department of
Environmental Protection

TO: Bill Congdon, OGC

FROM: Clair Fancy, BAR

DATE: December 21, 1994

SUBJECT: Florida Solite Company
Revised Proposed Permit: AC 10-222486

We have reviewed Florida Solite Corporation's November 16, 1994 letter asking for additional changes to the October 10 version of the referenced permit.

Our response to their request follows.

The MACT requirement for mercury in Specific Condition No. 7 is retained.

Specific Conditions Nos. 8 and 16 are amended to reference the permits for the scrubbers.

Specific Condition No. 10 is amended to require documentation of the concentration of pollutants for the hazardous LBM only.

Specific Condition No. 26 is amended to clarify the stack testing requirements.

It is our understanding that OGC will distribute copies of the latest amended proposed permit to the interested parties.

CHF/WH/bjb

Attachment

Department of Environmental Protection

Lawton Chiles
Governor

Twin Towers Office Building
2600 Blair Stone Road
Tallahassee, Florida 32399-2400

Virginia B. Wetherell
Secretary

PERMITTEE:
Florida Solite Company
P. O. Box 297
Green Cove Springs, FL 32043

Permit Number: AC 10-222486
Expiration Date: January 15, 1996*
County: Clay
Latitude/Longitude: 30°04'07"N 81°45'17"W
Project: Baghouse No. 1 Project

This permit is issued under the provisions of Chapter 403, Florida Statutes, and Florida Administrative Code Chapters 62-212 and 62-4. The above named permittee is hereby authorized to perform the work or operate the facility shown on the application and approved drawings, plans, and other documents attached hereto or on file with the Department and made a part hereof and specifically described as follows:

Authorization to install: baghouse No. 1, a top load pulse-jet dust collector (or equivalent); heat exchanger; modify the duct systems for kilns Nos. 1, 1A, and 5 to allow any kiln to discharge through either baghouse No. 5 (existing) or baghouse No. 1 (new); a pug mill filter receiver; a clinker hopper filter receiver; pneumatic system to connect the new baghouse to the existing lime and clay fines systems; and associated equipment.

The existing scrubber systems may be used to control the emissions from any of the kilns when only fuels not regulated by 40 CFR 266, Subpart H, are being used in the kiln.

Stack parameters for the sources covered by this permit are:

Stack	Height (ft.)	Diameter (ft.)	ACFM	DSCFM	Temp(°F)
Baghouse No. 1	72	4.33	78,400	40,000	420
Clay Fines Bin (Existing)	52	0.5	900	800	100
Lime Bin (Existing)	65	0.5	722	675	77
Pug Mill Filter Receiver	30	0.42	570	525	80
Clinker Hopper Filter Receiver	30	0.42	570	525	80

The baghouses do not have by-pass stacks. Except for fugitive emissions, all emissions must pass through a baghouse.

"Protect, Conserve and Manage Florida's Environment and Natural Resources"

Printed on recycled paper.

Baghouse No. 1 and the associated equipment will be located at the permittee's lightweight aggregate manufacturing facility (SIC 3295) on County Road 209A, north of Green Cove Springs, Clay County, Florida 32043. The UTM coordinates of this site are Zone 17, 427.3 km E and 3326.5 km N.

*This permit is void if construction does not commence within 18 months of its issuance, if construction is discontinued for more than 18 months, or if construction is not completed and the plant is not placed in operation within a reasonable time.

The source shall be constructed in accordance with the permit application, plans, documents, amendments and drawings, except as otherwise noted in the General and Specific Conditions.

Attachments are listed below:

1. Application received November 30, 1992.
2. DER's December 22, 1992, letter.
3. Koogler's September 10, 1993, letter.
4. DEP's October 12, 1993, letter.
5. Koogler's December 14, 1993, letter.
6. DEP's January 13, 1994, letter.
7. Koogler's February 17, 1994, letter.
8. Koogler's February 28, 1994, letter.
9. Florida Solite's March 15, 1994, letter.
10. DEP's March 31, 1994, letter.
11. Koogler's April 6, 1994, letter.
12. Koogler's July 5, 1994, letter.
13. Koogler's August 31, 1994, letter.

GENERAL CONDITIONS:

1. The terms, conditions, requirements, limitations, and restrictions set forth in this permit are "Permit Conditions" and are binding and enforceable pursuant to Sections 403.161, 403.727, or 403.859 through 403.861, Florida Statutes. The permittee is placed on notice that the Department will review this permit periodically and may initiate enforcement action for any violation of these conditions.

2. This permit is valid only for the specific processes and operations applied for and indicated in the approved drawings or exhibits. Any unauthorized deviation from the approved drawings, exhibits, specifications, or conditions of this permit may constitute grounds for revocation and enforcement action by the Department.

3. As provided in Subsections 403.087(6) and 403.722(5), Florida Statutes, the issuance of this permit does not convey any vested rights or any exclusive privileges. Neither does it authorize any injury to public or private property or any invasion of personal rights, nor any infringement of federal, state or local laws or regulations. This permit is not a waiver of or approval of any other Department permit that may be required for other aspects of the total project which are not addressed in the permit.

4. This permit conveys no title to land or water, does not constitute State recognition or acknowledgement of title, and does not constitute authority for the use of submerged lands unless herein provided and the necessary title or leasehold interests have been obtained from the State. Only the Trustees of the Internal Improvement Trust Fund may express State opinion as to title.

5. This permit does not relieve the permittee from liability for harm or injury to human health or welfare, animal, or plant life, or property caused by the construction or operation of this permitted source, or from penalties therefore; nor does it allow the permittee to cause pollution in contravention of Florida Statutes and Department rules, unless specifically authorized by an order from the Department.

6. The permittee shall properly operate and maintain the facility and systems of treatment and control (and related appurtenances) that are installed or used by the permittee to achieve compliance with the conditions of this permit, as required by Department rules. This provision includes the operation of backup or auxiliary facilities or similar systems when necessary to achieve compliance with the conditions of the permit and when required by Department rules.

GENERAL CONDITIONS:

7. The permittee, by accepting this permit, specifically agrees to allow authorized Department personnel, upon presentation of credentials or other documents as may be required by law and at a reasonable time, access to the premises, where the permitted activity is located or conducted to:

a. Have access to and copy any records that must be kept under the conditions of the permit;

b. Inspect the facility, equipment, practices, or operations regulated or required under this permit; and

c. Sample or monitor any substances or parameters at any location reasonably necessary to assure compliance with this permit or Department rules.

Reasonable time may depend on the nature of the concern being investigated.

8. If, for any reason, the permittee does not comply with or will be unable to comply with any condition or limitation specified in this permit, the permittee shall immediately provide the Department with the following information:

a. a description of and cause of non-compliance; and

b. the period of noncompliance, including dates and times; or, if not corrected, the anticipated time the non-compliance is expected to continue, and steps being taken to reduce, eliminate, and prevent recurrence of the non-compliance.

The permittee shall be responsible for any and all damages which may result and may be subject to enforcement action by the Department for penalties or for revocation of this permit.

9. In accepting this permit, the permittee understands and agrees that all records, notes, monitoring data and other information relating to the construction or operation of this permitted source which are submitted to the Department may be used by the Department as evidence in any enforcement case involving the permitted source arising under the Florida Statutes or Department rules, except where such use is prescribed by Sections 403.73 and 403.111, Florida Statutes. Such evidence shall only be used to the extent it is consistent with the Florida Rules of Civil Procedure and appropriate evidentiary rules.

10. The permittee agrees to comply with changes in Department rules and Florida Statutes after a reasonable time for compliance,

GENERAL CONDITIONS:

provided, however, the permittee does not waive any other rights granted by Florida Statutes or Department rules.

11. This permit is transferable only upon Department approval in accordance with Florida Administrative Code Rules 62-4.120 and 62-30.300, F.A.C., as applicable. The permittee shall be liable for any non-compliance of the permitted activity until the transfer is approved by the Department.

12. This permit or a copy thereof shall be kept at the work site of the permitted activity.

13. The permittee shall comply with the following:

a. Upon request, the permittee shall furnish all records and plans required under Department rules. During enforcement actions, the retention period for all records will be extended automatically unless otherwise stipulated by the Department.

b. The permittee shall hold at the facility or other location designated by this permit records of all monitoring information (including all calibration and maintenance records and all original strip chart recordings for continuous monitoring instrumentation) required by the permit, copies of all reports required by this permit, and records of all data used to complete the application for this permit. These materials shall be retained at least three years from the date of the sample, measurement, report, or application unless otherwise specified by Department rule.

c. Records of monitoring information shall include:

- the date, exact place, and time of sampling or measurements;
- the person responsible for performing the sampling or measurements;
- the dates analyses were performed;
- the person responsible for performing the analyses;
- the analytical techniques or methods used; and
- the results of such analyses.

14. When requested by the Department, the permittee shall within a reasonable time furnish any information required by law which is needed to determine compliance with the permit. If the permittee becomes aware that relevant facts were not submitted or were incorrect in the permit application or in any report to the Department, such facts or information shall be corrected promptly.

SPECIFIC CONDITIONS:

Construction Requirements

1. The construction of baghouse No. 1, duct system, pug mill filter receiver, clinker hopper filter receiver, material handling systems, and associated equipment shall conform to the plans in the application (Rule 62-4.070, F.A.C.). Except for the kiln burners, the liquid burnable material (LBM) regulated by 40 CFR 266, Subpart H, must be unloaded, stored, and transferred to the kilns in completely separate equipment than that used to handle LBM not regulated by 40 CFR 266, Subpart H.

2. A programmable logic controller shall be installed for each kiln that will allow liquid burnable material (LBM) regulated by 40 CFR 266, Subpart H, to be burned only when all of the flue gas from the kiln passes through a kiln's baghouse (dust collector) and both the kiln and the baghouse are operating properly (Rule 62-4.070, F.A,C.).

3. A Ramsey belt scale system (or equivalent) to measure the clay input shall be installed to determine the clay feed rate to each kiln while it is in service. Maximum error of the scale shall not exceed 2 percent. A front end loader at this facility shall be equipped with a scale that can be used to measure the production of any kiln (Rule 62-4.070, F.A.C.).

4. The permittee shall install, calibrate, operate, and maintain sulfur dioxide, carbon monoxide, and oxygen continuous emission monitors that meet the applicable performance specifications listed in 40 CFR 60, Appendix B (July 1, 1993) on baghouse No. 1. Each kiln will have a recording pyrometer and its operation temperature shall be recorded anytime LBM regulated by 40 CFR 266, Subpart H, is used for fuel for the kiln (Rule 62-4.070, F.A.C.).

5. The baghouses handling the kilns flue gasses shall be equipped with instruments that continuously record the pressure drop when the baghouses are in operation. The instruments shall be properly calibrated and maintained (Rule 62-4.070, F.A.C.).

6. The stack serving baghouse No. 1 shall be equipped with sampling facilities that meet all specifications listed in Rule 62-297.345, F.A.C.

7. The permittee shall install mercury emission control equipment within 12 months of being notified that Maximum Available Control Technology is applicable for this facility (Section 403.7895(4)(b)2, F.S.).

SPECIFIC CONDITIONS:

ALLOWABLE EMISSIONS

8. When baghouse No. 1 is serving kiln No. 5, the emissions shall not exceed any of the limits specified in permit No. AC 10-197099 that was issued for baghouse No. 5 on April 7, 1993. Maximum allowable emissions from either baghouse No. 1 or 5 while it is serving either kiln Nos. 1 or 1A shall not exceed any of the following:

Pollutant	Standard	Kiln 1*		Kiln 1A*	
		Lbs/hr	TPY	Lbs/hr	TPY
PM	0.08 gr/dscf @ 7% O_2	11.8	44.8	11.8	44.8
SO_2**	30 day average	84.0	319.2	75.8	288.0
NO_x		15.3	58.1	14.2	54.0
CO***	100 ppmvd @ 7% O_2	7.5	28.5	7.5	28.5
VOC	20 ppmvd	5.5	20.9	5.5	20.9
VE	15% opacity	15% opacity		15% opacity	

* 7,600 hrs/yr operation (Specific Condition No. 23 of permit No. AC 10-125262 for the construction of kiln No. 1A)
** 226 lbs SO_2/hr (1 hr. max)
(Rule 62-4.070, F.A.C. and 40 CFR 266)
***Alternate CO standard allowed (40 CFR 266)

When a scrubber is used to control the emissions from kilns 1 or 1A, all conditions of permit No. AC 10-125262 and AO 10-216998 (including those on emissions, operation, monitoring, and reporting) apply.

9. Maximum allowable particulate matter emissions from other baghouses at this facility shall not exceed 5 percent opacity or 0.02 gr/dscf and:

Source	Particulate Matter	
	Lbs/hr	TPY
Clay Fines Bin (existing)	0.14	0.6
Lime Bin (existing)	0.12	0.5
Pug Mill Filter Receiver (new)	0.1	0.4
Clinker Hopper Filter Receiver (new)	0.1	0.4

(Rule 62-297.340(3), F.A.C.)

SPECIFIC CONDITIONS:

10. The combined emissions of metals and other air pollutants from all sources at this facility shall not result in ambient air concentrations (predicted by Department approved modeling) that harm or injure human health or welfare, animal, plant, or aquatic life or property. This will be demonstrated by the permittee modeling the maximum emissions of the metals which could be emitted by this facility. This demonstration shall be made using the protocol in attachment 10 of the Air Construction Permit Application for kilns Nos. 1 and 1A. The modeling results must be approved by the Department. The tested emissions rate shall not exceed the maximum estimated rate that was used to show that ambient concentrations from this facility are less than the Department's annual Acceptable Ambient Concentrations.

Clay feed shall be sampled and analyzed weekly for the Boiler and Industrial Furnace (BIF) metals (40 CFR 261, Appendix 111, Table 2).

The maximum concentration of metals in the LBM to any kiln shall not exceed the concentration allowed under 40 CFR 266, Subpart H, or the following limits (whichever is more restrictive):

Metal	PPM (by weight)
Antimony	5,000
Arsenic	1,000
Barium	500,000
Beryllium	3,000
Cadmium	1,000
Chlorides	34,000
Chromium	10,000
Cr+6	1,000
Lead	50,000
Mercury	0.2
Nickel	5,000
Selenium	5,000
Silver	50,000
Sulfur	20,000
Thallium	2,000

For LBM regulated under 40 CFR 266, Subpart H, the permittee shall document the concentration of polychlorinated biphenyls (PCB's), sulfur, chlorides and BIF metals in the LBM as fired in any kiln. Each batch of LBM in the blend tanks shall be analyzed for PCB, sulfur, chlorides, and BIF metals. No LBM shall be transferred from the blend tanks to the burn tanks or kilns if any limit in this permit is exceeded.

(Section 403.161, F.S.)

SPECIFIC CONDITIONS:

11. Lead emissions from Kiln Nos. 1 and 1A shall not exceed the lesser of 1.9 lbs/hr or one-third of the emissions allowed under the BIF Rule (40 CFR 266.106(d)), whichever is more restrictive. (January 23, 1993, Settlement Agreement for kiln No. 5).

12. The LBM, as burned, shall not contain mercury at concentrations greater than 0.2 mg/l or the concentration allowed under 40 CFR 266, Subpart H, whichever is more restrictive. The permittee shall confirm that the LBM, as burned, does not contain mercury in excess of the most restrictive concentration by sampling and analysis for mercury as required by the BIF Rule (40 CFR 266, Subpart H). The Permittee may burn LBM containing mercury at concentrations greater than 0.2 mg/l only to the extent necessary during stack testing for the purpose of demonstrating BIF Rule compliance, so long as the Department and/or U.S. EPA have been notified (January 23, 1993, Settlement Agreement for kiln No. 5).

13. The operation of this facility shall not result in the emissions of air pollutants which cause or contribute to an objectionable odor. (Rule 62-296.320, F.A.C.).

14. Reasonable precautions shall be used to minimize unconfined emissions of particulate matter generated by this operation pursuant to Rule 62-296.310(3). Reasonable precautions shall be defined as the application of dust suppressants to the material/operation listed in the following table when the visible emissions (maximum 6 minute rolling average) exceed the listed opacity:

Material/Operation	Visible Emissions (Opacity)
Raw Clay Feed Area	5
Coal Storage Area and Coal Handling Equipment	10
Discharges of Product from the Kiln into the Product Cooler	10
Handling and Storage of the Product	20

Also, particulate matter collected by the baghouses shall be managed in enclosed tanks, containers, or conveyances so that it is shielded from wind and rain and shall not be placed on the ground prior to its use as a raw material or its incorporation into the aggregate product or its permitted disposal at a facility authorized to handle this material (Rule 62-296.310(3), F.A.C.).

SPECIFIC CONDITIONS:

Operation Requirements

15. Operation of kiln No. 5 with baghouse No. 1 is subject to all conditions in permit No. AC 10-197099 (construction permit for baghouse No. 5) or a valid air operation permit issued pursuant to this permit (Rule 62-4.160, F.A.C.).

16. If a kiln is not burning LBM subject to 40 CFR 266, Subpart H, the emissions may be controlled with its scrubber provided emissions/operations of the kiln/scrubber meet all conditions of the applicable scrubber permit (AC 10-125262 or AO 10-216988) and the air regulations (Rule 62-4.070, F.A.C.).

17. Kilns Nos. 1 and 1A shall not be in service at the same time. (Application)

18. Each baghouse or scrubber may only control the emissions from one kiln at a time. (Application)

19. Kilns Nos. 1 and 1A may operate 24 hrs/day, 7 days/week, 52 weeks/year but not over 7,600 hours during any calendar year. (Specific Condition No. 23 of permit No. AC 10-125262 issued January 15, 1987, for the construction of kiln No. 1A)

20. Maximum clay input to kilns 1 or 1A shall not exceed 14.4 TPH (wet) or 8.6 TPH (dry). Admixture (hydrated lime or crushed dolomitic limestone) input shall not exceed 800 lbs/hr. Production shall not exceed 7.0 TPH (dry). (Application)

21. The maximum allowable sulfur content of the fuels and the heat input to kilns Nos. 1 and 1A shall not exceed any of the following:

KILN	MMBTU/HR*	MMBTU/TON PRODUCT	LBM**(GPH)	COAL***(TPH)	NO. 2 OIL****(GPH)	PROPANE(GPH)	NAT. GAS (MMCFH)
1	47.6	6.8	476	1.3	340	520	0.05
1A	47.6	6.8	476	2.0	340	520	0.05

*When fuels are burned in combination, the maximum allowable heat input and sulfur dioxide emission limits for the kiln shall not be exceeded

**Maximum sulfur content of any LBM is 2.0 percent, 0.4 percent (30 day average).

***Maximum sulfur content of the coal is 1.5 percent

****Maximum sulfur content of the No. 2 oil is 0.5 percent and 0.3 percent, annual average.

(Application, existing permits, and F.A.C. Rule 62-4.070)

22. Oldover Corporation, or another facility permitted to manage hazardous waste under the provisions of 40 CFR 260 through 40 CFR 270, must supply all LBM regulated by 40 CFR 266, Subpart H, to

SPECIFIC CONDITIONS:

Florida Solite Company. Only LBM not regulated by 40 CFR 266, Subpart H, may be handled in separate equipment at this facility. The permittee is responsible for the LBM meeting all the requirements of this permit and all applicable state, federal, and local regulations. The LBM shall not contain any hazardous waste that is listed for dioxin or derived from the dioxin-listed wastes F020, F021, F022, F023, F026, or F027, as specified in 40 CFR 261, Subpart H, organic cyanides, sulfide, mercaptans, insecticides, pesticides, herbicides, electroplating waste, or radioactive material regulated by Florida's Department of Health and Rehabilitative Services. The LBM can contain up to 5.0 ppm polychlorobiphenyls (PCB) provided all applicable requirements listed in 40 CFR 761 (July 1, 1992) are met. In addition to those conditions required by 40 CFR 761.20, the permittee shall document that the LBM contains less than 5.0 ppm of PCB and has not been mixed with materials containing PCBs in concentrations of 50 ppm or greater. The LBM shall be tested for PCBs by Methods 3665/8080 as described in SW-846, 3rd Edition (1986), update 2 (Nov. 1992), and radioactivity prior to acceptance at the facility. The permittee shall retain the manifest of each LBM shipment or load for 3 years for Department inspection. (January 23, 1993, Settlement Agreement for kiln No. 5).

23. When burning LBM regulated by 40 CFR 266, Subpart H, in any kiln at this facility, the kiln baghouse inlet temperature, carbon monoxide, sulfur dioxide, and oxygen concentration of the flue gas shall be continuously monitored downstream of the furnace but prior to release to the atmosphere in the manner prescribed by the Boiler and Industrial Furnace Rule (40 CFR 266, Subpart H and Appendix IX). The kiln shall operate at a minimum temperature of 1800°F and at a minimum oxygen level of 6 percent, and a maximum flue gas temperature at the baghouse inlet of 450° F. The concentration of CO in the stack gases shall not exceed a maximum of 100 ppmv on an hourly rolling average basis, corrected to 7% oxygen, unless the permittee complies with the alternative carbon monoxide and hydrocarbon standard prescribed by 40 CFR 266.104(c) and (f) while using a continuous hydrocarbon analyzer. (40 CFR 266, Subpart H)

24. Kiln Nos. 1 and 1A shall achieve a minimum destruction and removal efficiency (DRE) of 99.99% for all organic hazardous constituents when burning LBM regulated by 40 CFR 266, Subpart H. Compliance with this requirement shall be demonstrated as required by 40 CFR 266.104(a).

<u>Compliance Testing</u>

25. Testing of emissions shall be conducted with the source operating at permitted capacity. Permitted capacity is defined as 90-100 percent of the maximum operating rate allowed by the permit.

SPECIFIC CONDITIONS:

If it is impracticable to test at permitted capacity, then sources may be tested at less than capacity; in this case subsequent source operation is limited to 110 percent of the test load until a new test is conducted. Once the unit is so limited, then operation at higher capacities is allowed for no more than 15 consecutive days for the purposes of additional compliance testing to regain the permitted capacity in the permit. (Rule 62-297.310, F.A.C.)

26. Each kiln, No. 1 and No. 1A, shall be tested at a feed rate of 7.7 to 8.6 TPH clay (dry) and 720 to 800 lbs/hr admixtures input within 30 days of placing each kiln into service with baghouse No. 1 or No. 5 for the following pollutants (minimum 2 tests for kilns 1 and 1A with baghouses 1 and 5 or minimum of 3 test for 3 kilns and 2 baghouses):

Pollutant	Method* (40 CFR 60, Appendix A, 7/1/91)	Frequency	Comments**
PM	5	Annually	While burning coal or LBM
SO_2	6, 6C	Annually	While burning coal or LBM
NOx	7E	Every 5 yrs	
VE	9	Annually	While burning coal or LBM
VOC	25	Every 5 yrs	While burning LBM
BIF Metals	EPA Multi/-Metal sampling train	Annually	While burning LBM subject to 40 CFR 266
Organic***	VOST	Annually	While burning LBM subject to 40 CFR 266. Analyze by Method 8240 of SW-846

* Or other methods with DEP approval.
** Annual stack tests shall be conducted on the kiln baghouses Nos. 1 and 5. The specified tests must be conducted while the plant is burning any fuel that has been used for more than 400 hours during the preceding 12 months. Tests shall be conducted on any air pollution control system that is used more than 400 hours during any year following initial testing of the baghouses.
*** Analyze for all volatile organic constituents listed in Method 8240. (Chapter 62-297, F.A.C.)

Administrative Requirements

27. Stack test reports which include the emissions, raw material feed rates, fuel type and rate, and clay/fuel analyses shall be

SPECIFIC CONDITIONS:

submitted to the Northeast District office within 45 days of the test. (Rule 62-297.570, F.A.C.)

28. When the Department, after investigation, has good reason (such as complaints, increased visible emissions, or questionable maintenance of control equipment) to believe that any applicable emission standard contained in this permit is being violated, it may require the owner or operator of the unit to conduct compliance tests which identify the nature and quantity of pollutant emissions from the source and to provide a report on the results of said tests to the Department. (Rule 62-297.340(2), F.A.C.)

29. The Northeast District office shall be notified in writing a minimum of 15 days in advance of any compliance tests to be conducted on this source. (Rule 62-297.340(1)(i), F.A.C.)

30. Nothing in this permit shall exempt the permittee from the requirements of 40 CFR 761, Polychlorinated Biophenyls, 40 CFR 266, Subpart H, Hazardous Waste Burned in Boilers and Industrial Furnaces, and Chapter 62-730, F.A.C., Hazardous Waste, or any other requirement outside the purview of the Department's air regulation (Chapters 62-296 and 297, F.A.C.). The permittee shall obtain such state and federal permits, when applicable, pursuant to any hazardous waste regulation. (Rule 62-4.160, F.A.C.)

31. The permittee, for good cause, may request that this construction permit be extended. Such a request shall be submitted to the Bureau of Air Regulation at least 60 days prior to the expiration of the permit (Rule 62-4.090, F.A.C.).

32. An application for an operation permit must be submitted to the Northeast District office at least 90 days prior to the expiration date of this construction permit. To properly apply for an operation permit, the applicant shall submit the appropriate application form, fee, certification that construction was completed noting any deviations from the conditions in the construction permit, and compliance test reports as required by this permit (Rules 62-4.055 and 62-4.220, F.A.C.). Any operating permit issued shall require an annual operation report be submitted by March 1 of each year. (Rule 62-4.070, F.A.C.)

STATE OF FLORIDA DEPARTMENT
OF ENVIRONMENTAL PROTECTION

_____
Virginia B. Wetherell, Secretary

Florida Department of
Environmental Protection

Twin Towers Office Building
2600 Blair Stone Road
Tallahassee, Florida 32399-2400

Lawton Chiles
Governor

Virginia B. Wetherell
Secretary

March 31, 1994

CERTIFIED MAIL - RETURN RECEIPT REQUESTED

Mr. Tony Saunders, Plant Manager
Florida Solite Company
P. O. Box 297
Green Cove Springs, Florida 32043

Dear Mr. Saunders:

Re: File No. AC10-222486, Clay Kilns Nos. 1, 1A, and 5

Your engineer's submittal of additional information in response to the Department's January 13, 1994, letter did not provide adequate answers to the question concerning Requirements for the Permitting of Commercial Hazardous Waste Incinerators. Therefore, your application for permit to modify kilns Nos. 1 and 1A remains incomplete.

To complete this application, please provide an adequate response to question 1.c. and d. of the Department's January 13, 1994, letter to you.

If you have any questions on this matter, write to me or call Willard Hanks at (904)488-1344 or Jeff Braswell in the Office of General Counsel at (904)488-9730.

Sincerely,

John C. Brown, Jr., P.E.
Administrator
Air Permitting and Standards

JCB/WH/wh

cc: Howard L. Rhodes, DARM
John Ruddell, DWM
William Congdon, OGC
Jeff Braswell, OGC
Ernest Frey, NED
John Koogler, P.E.
Tom Maurer, Foley & Lardner

Printed on recycled paper.

P 872 562 679

UNITED STATES POSTAL SERVICE

Receipt for Certified Mail

No Insurance Coverage Provided
Do not use for International Mail
(See Reverse)

Sent to Mr. Tony Saunders FL Solite	
Street and No. P. O. Box 297	
P.O., State and ZIP Code Green Cove Springs, FL 32043	
Postage	$
Certified Fee	
Special Delivery Fee	
Restricted Delivery Fee	
Return Receipt Showing to Whom & Date Delivered	
Return Receipt Showing to Whom, Date, and Addressee's Address	
TOTAL Postage & Fees	$
Postmark or Date Mailed: 3-31-94 Permit: AC10-222486	

PS Form 3800, JUNE 1991

Is your RETURN ADDRESS completed on the reverse side?

SENDER:

- Complete items 1 and/or 2 for additional services.
- Complete items 3, and 4a & b.
- Print your name and address on the reverse of this form so that we can return this card to you.
- Attach this form to the front of the mailpiece, or on the back if space does not permit.
- Write "Return Receipt Requested" on the mailpiece below the article number.
- The Return Receipt will show to whom the article was delivered and the date delivered.

I also wish to receive the following services (for an extra fee):

1. ☐ Addressee's Address
2. ☐ Restricted Delivery

Consult postmaster for fee.

3. Article Addressed to:

Mr. Tony Saunders
Plant Manager
Florida Solite Company
P. O. Box 297
Green Cove Springs, FL 32043

4a. Article Number
P 872 562 679

4b. Service Type
☐ Registered ☐ Insured
☒ Certified ☐ COD
☐ Express Mail ☐ Return Receipt for Merchandise

7. Date of Delivery
APR - 4 1994

GREEN COVE SPRINGS FL 32043

5. Signature (Addressee)

6. Signature (Agent)
Tony Saunders

8. Addressee's Address (Only if requested and fee is paid)

PS Form 3811, December 1991 ★U.S. GPO: 1992—323-402 **DOMESTIC RETURN RECEIPT**

Thank you for using Return Receipt Service.

Florida Department of
Environmental Protection

Lawton Chiles
Governor

Twin Towers Office Building
2600 Blair Stone Road
Tallahassee, Florida 32399-2400

Virginia B. Wetherell
Secretary

January 13, 1994

CERTIFIED MAIL - RETURN RECEIPT REQUESTED

Mr. Tony Saunders, Plant Manager
Florida Solite Company
P.O. Box 297
Green Cove Springs, Florida 32043

Re: File No. AC10-222486, Baghouse and duct system to serve Clay Kilns Nos. 1, 1A and 5

Dear Mr. Saunders:

Florida Solite Company's reply to the Department's October 12, 1993, letter did not provide all of the information necessary to complete processing of the above referenced construction permit application. Please provide the following information needed to complete your application.

1. The Department has concluded that Requirements for the Permitting of Commercial Hazardous Waste Incinerators applies to this project. Section 403.7869(2), Florida Statutes (F.S.). This law prohibits the Department from issuing any permit for this project until all the requirements of Section 403.7895, F.S., are satisfied.

a. Please provide a Certification of Need for this project. Section 403.7895(3), F.S. The Department will continue processing your application without the Certification of Need but will be unable to deem your application complete until a Certification of Need issued by the Governor and Cabinet sitting as the Statewide Multipurpose Hazardous Waste Facility Siting Board is provided.

b. Please provide the cumulative impacts (inhalation, ingestion, skin contact) upon human health and the environment from the potential emissions of the facility. Section 403.7895(4)(a), F.S.

c. Please describe the procedures that ensure that wastes classified by the United States Environmental Protection Agency as containing organic mercury are not accepted by Florida Solite Company for treatment. Section 403.7895(4)(b)1, F.S.

Printed on recycled paper.

d. Please propose a Maximum Achievable Control Technology (MACT) for the control of mercury emissions from the kilns. Section 403.7895(4)(b)2, F.S.

2. Please publish and provide the Department with proof of publication of the Notice of Application pursuant to Section 403.815, F.S. which takes precedence over Florida Administrative Code Rule 17-103.150.

3. Although the proposed baghouse will probably reduce the emissions of many air pollutants, the emissions of some air pollutants have the potential to increase because of the higher operating temperature of the baghouse when compared to the scrubbers. Please address the change in actual emissions of metals, soluble material, and condensable material (acid gases and organic compounds) that will result if the scrubbers are replaced with baghouses.

4. Please perform any additional modeling required if the response to question 3 generates a need for modeling.

5. Please describe the provisions made for the installation of sulfur dioxide continuous emissions monitors in the stacks.

6. Please amend the application to include the use of admixtures (additive that improves handling of the product).

7. You noted that "Continued use of the wet scrubber would not allow for a comfortable margin of safety, and would make it more burdensome to operate the kilns in full compliance on a routine basis." The Department does not have reasonable assurance that these kilns can now operate in compliance with the 40 CFR 266, Subpart H - Hazardous Waste Burned in Boiler and Industrial Furnaces. Please address this concern.

The Department will resume processing this application after receipt of the requested information. If you have questions on this matter, please write to me or call Willard Hanks at (904) 488-1344 or Jeff Braswell in the Office of General Counsel at (904) 488-9730.

Sincerely,

John C. Brown, Jr., P.E.
Administrator
Air Permitting and Standards

JCB/WH/bjb

cc: Howard L. Rhodes, DARM
John Ruddell, DWM
William Congdon, OGC
Ernest Frey, Northeast District
John Koogler, P.E.
Tom Maurer, Foley & Lardner

P 872 562 581

Receipt for Certified Mail

No Insurance Coverage Provided
Do not use for International Mail
(See Reverse)

UNITED STATES POSTAL SERVICE

Sent to Mr. Tony Saunders	
Street and No. P. O. Box 297	
P.O., State and ZIP Code Green Cove Springs, FL 32043	
Postage	$
Certified Fee	
Special Delivery Fee	
Restricted Delivery Fee	
Return Receipt Showing to Whom & Date Delivered	
Return Receipt Showing to Whom, Date, and Addressee's Address	
TOTAL Postage & Fees	$
Postmark or Date Mailed: 1/13/94 AC10-222486	

PS Form 3800, JUNE 1991

Is your RETURN ADDRESS completed on the reverse side?

SENDER:

- Complete items 1 and/or 2 for additional services.
- Complete items 3, and 4a & b.
- Print your name and address on the reverse of this form so that we can return this card to you.
- Attach this form to the front of the mailpiece, or on the back if space does not permit.
- Write "Return Receipt Requested" on the mailpiece below the article number.
- The Return Receipt will show to whom the article was delivered and the date delivered.

I also wish to receive the following services (for an extra fee):

1. ☐ Addressee's Address
2. ☐ Restricted Delivery

Consult postmaster for fee.

3. Article Addressed to:
Mr. Tony Saunders, Plant Manager
Florida Solite Company
P. O. Box 297
Green Cove Springs, FL 32043

4a. Article Number
P 872 562 581

4b. Service Type
☐ Registered ☐ Insured
☒ Certified ☐ COD
☐ Express Mail ☐ Return Receipt for Merchandise

7. Date of Delivery
1-18-94

5. Signature (Addressee)

6. Signature (Agent)

8. Addressee's Address (Only if requested and fee is paid)

Thank you for using Return Receipt Service.

PS Form 3811, December 1991 ☆U.S. GPO: 1992—323-402 **DOMESTIC RETURN RECEIPT**

KOOGLER & ASSOCIATES
ENVIRONMENTAL SERVICES
4014 NW THIRTEENTH STREET
GAINESVILLE, FLORIDA 32609
904/377-5822 ▪ FAX 377-7158

KA 150-90-07

December 14, 1993

RECEIVED
DEC 17 1993
Division of Air
Resources Management

Mr. John C. Brown, Jr.
Florida Department of
Environmental Protection
Twin Towers Office Building
2600 Blair Stone Road
Tallahassee, FL 32399-2400

Subject: Submittal of Additional Information
Florida Solite Company
Baghouse and Ducting for Kilns 1 and 1A
Permit File No. AC10-222486

Dear Mr. Brown:

This is a response to your letter dated October 12, 1993, requesting additional information on the above project. The following responses are in the order of the questions raised by FDEP.

1. **If baghouse No. 1 were approved, can more than 2 kilns be operated at the same time (2 kilns using baghouses and 1 kiln using a scrubber)? If not, what would prevent the operation of 3 kilns at the same time?**

   RESPONSE:

   Presently, Florida Solite Company is physically capable of operating three kilns at the same time. A specific condition in the Kiln 1A operation permit (and construction permit) does not allow Kilns 1 and 1A to operate at the same time. In accordance with the current FDEP permit requirement, Florida Solite does not operate Kilns 1 and 1A at the same time. After approval of this application for construction of Baghouse No. 1 and the necessary ducting, Florida Solite will still be physically capable of operating three kilns at the same time. However, the Kiln 1A permit condition currently in effect would prevent the operation of more than two kilns at the same time. Operating records for each kiln will provide documentation that this limitation is not violated.

2. **Provide a description of the vapor recovery system for the 20,000 gallon tanks discussed in Attachment 4 of your reply.**

RESPONSE:

The subject storage tank system has been deleted from the RCRA permit application at this time, as Florida Solite will utilize fuel from the Oldover storage facility. The storage tanks at the Oldover facility are under different ownership, and are permitted separately.

3. **What is the "admixtures" used in the hot end of the kiln and are they emitted to the atmosphere (Attachment 5 of your reply)?**

RESPONSE:

Admixtures added to the hot end of the kiln at this time include inorganic agents, such as hydrated lime or crushed dolomitic limestone, which are used to coat the clinker to enhance product handling. Florida Solite will submit a request for FDEP approval prior to the use of any other admixtures, if required. Particulate contribution to the kiln gas stream from these agents will be controlled by the baghouse.

4. **In paragraph 3.2.2. of Attachment 5 you noted that the raw material is routinely analyzed for metals, chlorine, ash and organics. Please describe the ash analysis.**

RESPONSE:

The original purpose of Attachment 5 was to address a previous question related to Automatic Waste Feed Shut-offs. The attachment was extracted from the Trial Burn Plan submitted with Florida Solite's RCRA Part B application under the Boiler and Industrial Furnace (BIF) regulation. The attachment described sampling originally proposed in the Trial Burn Plan. The ash content of the raw material is not a meaningful parameter in normal operations and therefore will not be routinely analyzed. According to a revised Trial Burn Plan, routine analysis of the raw material will be conducted for metals and chlorine only, as required by the BIF regulations. A copy of the revised Trial Burn Plan will be sent to the Department.

5. **How accurate is the belt scale that has been selected to measure the clay feed to the kilns? Will each kiln have its own belt scale? If not, how will the feed rate to each kiln be determined when more than one kiln is in operation?**

RESPONSE:

A clay feed belt scale system will weigh and totalize with an error not to exceed two percent at flow rates between 25 and 100 percent of scale system capacity, in accordance with BIF requirements. Each kiln will have its own belt scale.

6. **It is not clear from the process drawing in Attachment 7 how the fines are transferred from kilns 1/1A to the dust silo. Please explain.**

RESPONSE:

The fines from Kilns 1/1A will be transferred to the dust silo via an enclosed air conveyance system. The system will utilize a blower to draw the fines from the baghouse airlock through an enclosed piping system to a filter receiver at the top of the dust silo. Filtered air will be vented to the atmosphere while the dust will fall into the silo.

7. **Provide the requested information on the temperature and pressure monitors when it is available (question 8 of FDEP Dec. 22 letter).**

RESPONSE:

Information on the temperature and pressure monitoring equipment is provided in Attachment 1.

8. **We requested a study to confirm that Florida Solite Company can correlate the sulfur dioxide emissions from the kilns as determined with a continuous monitor with an earlier sulfur analysis of the clay. For technical reasons, this study should use kiln 1A which has a monitor. Please clarify your plans for this study.**

RESPONSE:

The proposed study, using Kiln 1A as requested by FDEP, can be implemented once FDEP approves the baghouse/ducting for Kiln 1/1A. Once the baghouse is operational and the initial compliance tests have been completed, Florida Solite will either commence a study to confirm the correlation between sulfur dioxide emissions from the kiln (using a continuous emission monitor) to the sulfur analysis of the clay, or utilize a continuous sulfur dioxide monitor on a routine basis.

9. Describe the evaluation of all LBM that is not supplied by Oldover Corporation. Who are the other suppliers of LBM?

RESPONSE:

As all the hazardous LBM is, and will be supplied by Oldover, a description of the evaluation of hazardous LBM from any other source is not applicable. Furthermore, Florida Solite analyzes all hazardous LBM prior to burning, for heat value, water content, specific gravity, ash content, chlorides, sulfur, PCBs, and BIF metals. Non-hazardous LBM is evaluated based on analyses required from the supplier. Suppliers of non-hazardous LBM include used oil suppliers and industries generating non-hazardous oils.

10. What independent checks of the analysis of LBM provided by Oldover Corporation are done by Florida Solite Company?

RESPONSE:

Oldover Corporation is responsible for evaluating all the incoming shipments of hazardous LBM. This includes a pre-qualification procedure to approve the waste prior to shipment and an analysis on all incoming shipments, in accordance with Oldover's Waste Analysis Plan (previously submitted to FDEP). Prior to burning, Florida Solite analyzes the hazardous LBM for heat value, water content, specific gravity, ash content, chlorides, sulfur, PCB's and BIF metals. The analyses for both Oldover and Florida Solite are performed at the same laboratory under the same FDEP approved quality assurance and quality control procedures.

11. What is the maximum halogen content of the LBM that will be used by Florida Solite Company? How is this determined and controlled?

RESPONSE:

The ambient air quality analysis submitted to FDEP compared the more restrictive Reference Air Concentration of chlorine (annual RAC of 0.4 micrograms per cubic meter) with the predicted ambient air impact resulting from the use of LBM with a chlorides content of 3.4 percent. The results of the analysis indicated that under those conditions, the predicted impacts would be well within the BIF requirements. Therefore, Florida Solite proposes to limit the content of chlorides in the LBM fired to 3.4 percent. Compliance with this limit will be determined by an analysis of the LBM (see RESPONSE 10).

12. **Does Florida Solite Company or Oldover Corporation accept waste containing organic mercury, such as K071?**

RESPONSE:

Florida Solite does not accept LBM that is toxic or hazardous by virtue of the presence of mercury. In addition, conformance with permit limitations regarding the concentration of mercury in the LBM (e.g. Kiln 5 construction permit No. AC10-197099) will be verified by on-site analysis (discussed above).

The additional waste codes have been proposed in the RCRA permit application, such as K071, in recognition of the fact that under the land ban and toxicity characteristic rules, generators and fuel blenders are more fully characterizing their waste streams and, under the Derived-From and Mixture Rules, are identifying additional waste codes that technically may apply to the waste stream even if they do not significantly reflect the actual character of the material.

13. **Please submit the trial burn plans, when available (question 26 of FDEP Dec. 22 letter).**

RESPONSE:

A revised Trial Burn Plan for Florida Solite was submitted to the U.S. EPA on November 30, 1993. A copy will soon be forwarded to the Department.

14. **Please provide proof of publication of the Notice of Application.**

RESPONSE:

Pursuant to Rule 17-103.150(1), Florida Administrative Code (FAC), a Notice of Application is required to be published within 14 days after a complete application is submitted to FDEP. Accordingly, Florida Solite will be able to proceed with the publishing of the Notice of Application as soon as FDEP confirms that the application is complete.

15. **Does Florida Solite Company burn LBM that may be classifiable as hazardous waste under any state or federal rule or regulation? If so, please identify the rules or regulations applicable to the waste.**

RESPONSE:

RCRA hazardous waste facility permits have been required for incinerators which burn hazardous waste since the beginning of the RCRA program in the early 1980's. However, industrial furnaces did not have to obtain hazardous waste permits when they burned hazardous waste as a fuel until the adoption of the Boiler and Industrial Furnace (BIF) regulations which were published on February 21, 1991. Pursuant to both the state and federal RCRA programs, facilities which are required to obtain hazardous waste facility permits due to a regulatory change may qualify for continued operation while their hazardous waste facility permit (Part B) application is pending. This ability to continue operation while the final permit is being processed is referred to as "interim status" under the Federal RCRA scheme and is handled through a temporary operation permit (TOP) at the state level. Florida Solite has both interim status and a TOP for the state RCRA program. Pursuant to the Memorandum of Agreement between EPA and FDEP, EPA is responsible for processing Florida Solite's BIF Part B permit application until such time as FDEP obtains authorization to administer that portion of the RCRA program at the state level.

The hazardous waste-derived fuel used by Florida Solite is subject to regulation under state and federal hazardous waste rules (Florida Administrative Code Rule 17-730; 40 Code of Federal Regulations Parts 260 - 270). It should be noted that under both the state and federal rules, the definitions and standards for incinerators are different than for those for industrial furnaces (Florida Solite Kilns 1, 1A and 5 are classified as industrial furnaces under the BIF Rule).

16. **Please describe whether Florida Solite Company can currently burn such waste in kilns 1 and 1A using the existing scrubber and water cooling/settling pond system and still comply with all existing state and federal hazardous waste regulatory requirements.**

RESPONSE:

Florida Solite currently has all necessary permits and authorizations to burn hazardous waste fuel in Kilns 1 and 1A using the existing air pollution control system, as it has previously.

In 1991, Florida Solite chose to temporarily cease burning hazardous waste fuel in these kilns, primarily for two reasons. First, under revisions to the RCRA Mining Waste Exclusion (40 CFR §261.4(b)(7)), the management of wastewater and associated sludge from the scrubbers would have been substantially more expensive than in the

past. A dry particulate control system will avoid this additional cost and facilitate the recycling of the dust that is captured. Second, the installation of a baghouse will allow Florida Solite to easily meet federal BIF requirements. Continued use of the wet scrubbers would not allow for a comfortable margin of safety, and would make it more burdensome to operate the kilns in full compliance on a routine basis. Finally, because of depressed conditions in the construction market, product demand was such that routine operation of these kilns was unnecessary to meet production targets. Consequently, Florida Solite has not attempted to certify on the basis of a compliance test that Kilns 1 and 1A comply with BIF requirements on the wet scrubbers. However, the most recent emissions test (conducted on April 30, 1990) on Kiln 1A showed particulate emissions of 0.057 gr/dscf, corrected to 7% oxygen. This compares to the BIF limitation of 0.08 gr/dscf. Also, in February of 1983, a U.S. EPA contractor performed destruction and removal efficiency testing on a Florida Solite kiln burning hazardous waste fuel. This test demonstrated that the kiln easily achieved DRE in excess of 99.99%. Based on modeling performed by Koogler & Associates and testing performed on other kilns, we believe that applicable limits for other BIF operating parameters, and applicable state air permit requirements, could be met using the current wet scrubbers.

17. **If Florida Solite Company cannot currently burn such hazardous waste in kiln 1 or 1A using the existing scrubber and water cooling/ settling pond system and still comply with all existing state and federal hazardous waste regulatory requirements, please describe what modifications would have to be made to kilns 1 and 1A and/or controls to allow burning such waste in compliance with all regulations.**

RESPONSE:

As explained in the previous response, Florida Solite could burn hazardous waste fuel in Kiln 1 or 1A using the existing wet air pollution control system and still demonstrate compliance with BIF emission limitations. The proposed installation of a baghouse for Kilns 1 and 1A will result in reduced air emissions, more efficient operation, and the elimination of land disposal of scrubber water/sludge while burning hazardous waste fuel. In addition, emissions and process parameters will be much more closely monitored.

18. **If Florida Solite Company cannot currently burn such hazardous waste in kiln 1 or 1A using the existing scrubber and water cooling/ setting pond system, please describe what additional state and federal permits would be necessary for kilns 1 and 1A to be allowed to burn such waste in compliance with all regulations.**

RESPONSE:

As explained above, Florida Solite has interim status under the BIF rule and all necessary operating permits to currently burn hazardous waste fuel. U.S. EPA is currently processing Florida Solite's "Part B" permit application, which will establish final permit limits.

19. **What will be accomplished by the addition of baghouse 1 at this facility? Specifically, will the second baghouse increase the quantity of hazardous waste that can be burned at this facility?**

RESPONSE:

The addition of Baghouse 1 will allow Florida Solite to reduce emissions from its kilns, allow for the more efficient capture of kiln dust and the recycling of such dust, and improve the overall efficiency and level of control of the manufacturing process. The addition of a second baghouse will not increase the quantity of hazardous waste fuel that Florida Solite is allowed to burn under its air operating permits and BIF interim status limitations.

20. **What were the actual emissions (F.A.C. Rule 17-210.200) of each criteria/noncriteria pollutant from kilns 1/1A during the last 2 years (approximately Oct. 1991 to Oct. 1993) and the last 2 representative years of operation?**

RESPONSE:

It is our understanding that this question is intended to identify if the proposed project, consisting of the installation of a baghouse as an alternate air pollution control device to a existing scrubber, will result in a modification; and if so, to evaluate any net emissions increase based on "proposed" and "actual" emissions.

The proposed project does not involve any change to the currently permitted operation, except for the installation of a baghouse and ductwork.

In the case of the proposed project, it seems appropriate to point out that the definition of "modification" does not include:

> "The addition or the use of any system or device whose primary function is the reduction of air pollutants, except when an emission control system is removed or is replaced by a system which the Administrator determines to be less environmentally beneficial."

As you are aware, in the case of Florida Solite's kilns, the Department has already determined that the use of a baghouse is more environmentally beneficial than the use of a scrubber (see Technical Evaluation by FDEP on a baghouse for Kiln 5). Therefore, the question of a modification does not arise. Consequently, an evaluation of actual emissions is not necessary.

21. **What will be the potential increase in emissions of each criteria/ noncriteria pollutant if the current application is approved? Please perform any additional modeling required if the responses to questions 19 and 20 generate the need for it.**

RESPONSE:

The evaluation of potential increase in air emissions of pollutants from the proposed project (as a result of the use of a more environmentally beneficial air pollution control device, as determined by FDEP) is not required (see RESPONSE Nos. 19 and 20).

22. **What are the cumulative impacts (inhalation, ingestion, skin contact) upon human health and the environment from the potential emissions of this facility?**

RESPONSE:

A cumulative impact analysis is only required as part of an application to construct a commercial hazardous waste incinerator. This application is not for a new or expanded commercial hazardous waste incinerator and, therefore, this requirement is not applicable. Further, since the permit application is not for the construction of a new source, but merely for the addition of a more effective air pollution control system, no cumulative impact analysis is necessary or appropriate. Issuance of a permit will result in a reduction in potential impacts of the facility.

23. **Please propose a Maximum Achievable Control Technology for the control of mercury emissions from these kilns.**

RESPONSE:

Application of a Maximum Achievable Control Technology (MACT) for the control of mercury emissions is required only for new commercial hazardous waste incinerators. Since Florida Solite is an existing facility which already has all necessary permits to burn hazardous waste fuel, the MACT requirement does not apply to this facility. Florida Solite is seeking a modification of existing permits to improve facility operation and pollution control. Florida Solite is not applying for a permit to construct a commercial hazardous waste incinerator. Further, it is not necessary or appropriate to apply MACT for mercury emissions to Florida Solite because Florida Solite does not burn waste fuel that is toxic or hazardous by virtue of the presence of mercury. Mercury emissions are specifically limited under the BIF Rule.

It is anticipated that the above information will complete FDEP's review of the proposed project.

If there are any questions, please do not hesitate to give Pradeep Raval, or myself a call.

Very truly yours,

KOOGLER & ASSOCIATES

John B. Koogler, Ph.D., P.E.

JBK:PAR:wa

c: Mr. J. Braswell, OGC, FDEP
Mr. T. Saunders, Solite
Mr. G. Franklin, Solite
Mr. S. Holt, Solite
Mr. G. Eure, Solite
Mr. J. Jewett, Solite
Mr. A. Galliano, Oldover
Mr. T. Maurer, Foley & Lardner
M. Hanks
C. Holloway
J. Cole, NE Dist.

KOOGLER & ASSOCIATES

ATTACHMENT 1

INFORMATION ON TEMPERATURE AND PRESSURE MONITORS

Best Available Copy

THERMOCouple

SPECIAL PURPOSE — ABRASION RESISTANT THERMOCOUPLES

Copyright © 1993, Pyromation, Inc.

The "Hardened Aggregate" thermocouples listed below are used to measure the temperatures of abrasive materials as found in aggregate mixers and other granular product dryers. Two styles of hardened tip thermocouples are offered to resist abrasion. The "Flame Sprayed Tip" style has a flame sprayed coating of tungsten carbide over the last 5" of the thermocouple tip. The "Tool Steel Tip" style has a 3(1/2)" long tip of special hardened tool steel. Both thermocouple tips are designed for abrasion resistance.

ATTN: Richard Altman

FLAME SPRAYED TIP STYLE

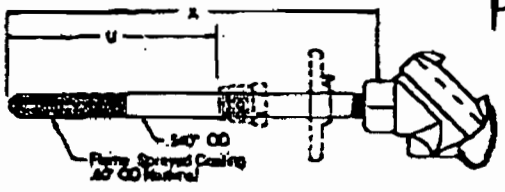

TOOL STEEL TIP STYLE

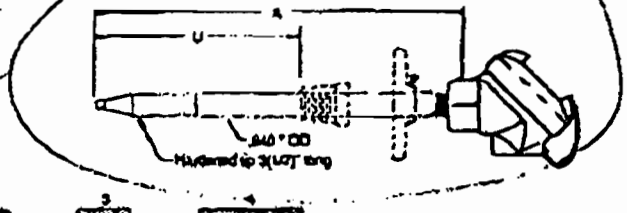

EXAMPLE ORDER NUMBER: J20H-G (1-1, 1-2) - 18 (2) - 31 (3) - 6D12 (4)

1-1 THERMOCOUPLE TYPE

ORDER CODES SINGLE	ORDER CODES DUPLEX	ELEMENT TYPE	DESCRIPTION
J50H	JJ50H	Iron-Constantan	Flame Spray Tip
K50H	KK50H	Chromel-Alumel	Flame Spray Tip
J20H	JJ20H	Iron-Constantan	Tool Steel Tip
K20H	KK20H	Chromel-Alumel	Tool Steel Tip

1-2 GROUNDING STYLE

ORDER CODE	DESCRIPTION
G	Grounded
U	Ungrounded

X

2 LENGTH

ORDER CODE	LENGTH
12	12 inches
18	18 inches
24	24 inches
Specify other lengths	

X

3 HEAD TERMINATION

ORDER CODE	DESCRIPTION
02	No head supplied with 6" leads beyond tube
31	Aluminum
34	Cast Iron
53	Delrin (Grey)
OPTIONS FOR HEAD CODES 31 and 34	
W	White Epoxy Coating
S	Internal Ground Screw

X

4 OPTIONS

ORDER CODE	DESCRIPTION
6D (U)	3/4" NPT Welded Steel Bushing
6E (U)	1" NPT Welded Steel Bushing
H	Adjustable Steel Mounting Flange

Note: Substitute length in inches from hot tip to bottom of bushing for "U" above

SPECIAL PURPOSE — SAND TEMPERATURE THERMOCOUPLE

The "Sand Temperature" thermocouple listed below is typically used to measure the temperature of hot sand and other similar materials on conveyors or at drop chutes.

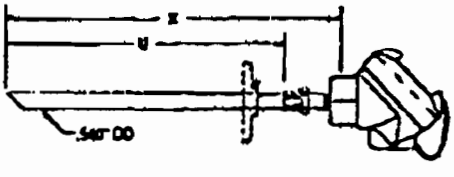

EXAMPLE ORDER NUMBER: J14CS-G (1-1, 1-2) - 18 (2) - 31 (3) - 6C12 (4)

1-1 THERMOCOUPLE TYPE

ORDER CODES SINGLE	ORDER CODES DUPLEX	ELEMENT TYPE
J14CS	JJ14CS	Iron-Constantan
K14CS	KK14CS	Chromel-Alumel

1-2 GROUNDING STYLE

ORDER CODE	DESCRIPTION
G	Grounded
U	Ungrounded

2 LENGTH

ORDER CODE	LENGTH
12	12 inches
18	18 inches
24	24 inches
Specify other lengths	

3 HEAD TERMINATION

ORDER CODE	DESCRIPTION
02	No head supplied with 6" leads beyond tube
31	Aluminum
34	Cast Iron
53	Delrin (Grey)
OPTIONS FOR HEAD CODES 31 and 34	
W	White Epoxy Coating
S	Internal Ground Screw

4 OPTIONS

ORDER CODE	DESCRIPTION
6C (U)	1/2" NPT Welded Steel Bushing
6D (U)	3/4" NPT Welded Steel Bushing
H	Adjustable Steel Mounting Flange

Note: Substitute length in inches from hot tip to bottom of bushing for "U" above

Best Available Copy

T5 Series Electronic Pressure Transmitters

Specification Sheet 2-19
Issue 2, August 1992

- **Accuracy; ±0.2% of Span**
- **Outstanding Temperature Stability**
- **True Draft Range Model**
- **Unsurpassed 7-Year Warranty**
- **Hermetically Sealed Electronics**
- **State-of-the-Art Surface Mount Circuitry**

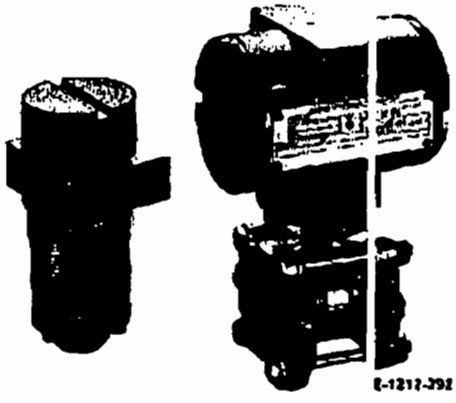

MODELS

T5A, Absolute Pressure	10mm Hg to 600 psia
T5D, Differential Pressure	0.8" H_2O to 180 psid
T5G, Gauge Pressure	10 to 6000 psi

The *T5 Series* Electronic Pressure Transmitter is a two-wire, 24V dc transmitter with a 4 to 20 mA dc output signal linear to the input pressure. It is based on the highly reliable, field proven 500T variable capacitance sensing system adding a degree of flexibility in ranges, materials, and options previously unavailable until now. The *T5 Series* provides a product line in which each unit was *designed for its intended purpose*, unlike other well known brands that offer one base "plain vanilla" design that has to be adapted to serve all diverse, high volume applications. Process-specific applications are typically the most demanding – requiring a higher capability, not the lesser performance of the "make do" standard product adaptations. An example of our "designed for its intended purpose" philosophy is found in the *T5 Series* as it offers one of the few true industrial grade draft range transmitters on the market. The T5DA Draft Range, with optional special calibration, is capable of spans as low as 0.4" H_2O.

From an environmental standpoint, the *T5 Series* with its hermetically sealed enclosure and rugged surface mount electronics is more than a match for your harshest operating conditions.

The T5 Series is available in either the standard T-Barrel housing designed to accommodate a wide variety of options and accessories as well as in the compact "Vertical" design. The latter is ideal for mounting in enclosures where space and access are at a premium and the cost of the enclosure can easily exceed the price of the transmitter.

If our company takes the time and effort to meet your most difficult applications, you can rest assured we do the same for the simple "plain vanilla" models as well.

ABB Kent-Taylor

ABB
ASEA BROWN BOVERI

SPANS AND RANGES

Model				Span Limits	Range Limits		Static Pressure Limits
Range	T5A	T5D	T5G		Lower	Upper	
A		★		0-0.8 to 0-5.0" (0.2 to 1.2 kPa)	-5.0"	5.0"	1000 psi
B	★	★		0-5.0 to 0-30" (1.2 to 7.5 kPa) 0-10 to 0-55mm Hg (1.2 to 7.5 kPa abs)	-30" 0mm Hg (see note)	30" 55mm Hg	2500/6000 psi 2500 psia
D	★	★		0-25 to 0-150" (6 to 36 kPa) 0-50 to 0-280mm Hg (7 to 37 kPa abs)	-150" 0mm Hg (see note)	150" 280mm Hg	2500/6000 psi 2500 psia
F	★	★		0-150 to 0-800" (36 to 200 kPa) 0-280 to 0-1500mm Hg (37 to 200 kPa abs)	-800" 0mm Hg (see note)	800" 1500mm Hg	2500/6000 psi 2500 psia
G		★		0-30 to 0-180 psid (210 to 1240 kPa)	-180 psid	180 psid	750/6000 psid
H	★		★	0-10 to 0-40 psi (70 to 275 kPa) 0-10 to 0-40 psia (70 to 275 kPa abs)	-14.7 psi 0mm Hg	40 psi 40 psia	120 psi 120 psia
J	★		★	0-40 to 0-160 psi (275 to 1100 kPa) 0-40 to 0-160 psia (275 to 1100 kPa)	-14.7 psi 0 psia	160 psi 160 psia	480 psi 480 psia
K	★		★	0-150 to 0-600 psi (1.0 to 4.2 MPa) 0-150 to 0-600 psia (1.0 to 4.2 MPa)	-14.7 psi 0 psia	600 psi 600 psia	1500 psi 1500 psia
L			★	0-500 to 0-2000 psi (3.5 to 14.0 MPa)	-14.7 psi	2000 psi	5000 psi
M			★	0-2000 to 0-6000 psi (14.0 to 40.0 MPa)	-14.7 psi	6000 psi	9000 psi

NOTE: Zero deviation is limited to 50.0% of URL for vertical housing option.

PERFORMANCE SPECIFICATIONS

Electrical Classification
Agency approvals and certifications as listed in Ordering Information. Also see Specification Sheet 12-16.

Accuracy (includes effects of linearity, hysteresis, & repeatability)
Ranges B-L: ±0.2% of calibrated span
Range A: ±0.5% of calibrated span
Range M: up to ±0.5% of calibrated span (at 6000 psi)

Operating Voltage

	Min.	Max.
Without options	12.0V dc	45V dc
With square root extractor	16.5V dc	45V dc
With surge protection	13.4V dc	45V dc
With digital meter	16.0V dc	45V dc
With all options	21.9V dc	45V dc

Load Limitations
Drive Impedance
$\frac{\text{Supply Vdc - Min Vdc}}{0.020}$

Overpressure Effect
±0.25% of upper range limit (URL) on zero

RFI Effect
Meets SAMA Standard PMC 33.1-1978. Tested over a full frequency range 20 to 1000 MHz.

Optional Surge Protection
Up to 2500 V pulse (5K amp discharge current) of 8µs rise time and 20µs decay to half value.

Output Signal
4 to 20 mA dc

Long Term Stability
Range A: Better than ±0.5% of URL after 6 months.
Range B-M: Better than ±0.25% of URL after 6 months.

Supply Voltage Effect
Less than 0.005% per Vdc

Load Effect
None

Static Pressure Effect
% of upper range limit at standard MWP

	On Zero	On Span
Range A:	2.0%	0.2% per 100 psi
Range B:	1.0%	0.05% per 500 psi
Range D:	0.25%	0.025% per 500 psi
Range F:	0.25%	0.025% per 500 psi
Range G:	0.5%	0.11% per 2500 psi

Maximum Drive Impedance
Without options: 1650 ohms
With surge protection: 1580 ohms

Temperature Limits
Fill Fluid:
Range A: Silicone: -13 to 165°F (-25 to 75°C)
Inert: 20 to 167°F (-7 to 75°C)
Ranges B-M: Silicone: -40 to 250°F (-40 to 121°C)
Ranges B-G: Inert: 20 to 250°F (-7 to 121°C)
Ranges H-M: Inert: 0 to 250°F (-18 to 121°C)

Ambient
-40 to 185°F (-40 to 85°C)*
Storage:
-65 to 200°F (-54 to 93°C)*

*With Digital Meter, Upper Limit is 149°F (65°C)

Ambient Temperature Effect
per 100°F at maximum span

	On Zero	Total	
Range A-B:	±1.0%	2.0%	
Range B:	±2.0%	4.0%	Tantalum diaphragm
Ranges D-M:	±0.5%	1.0%	

Vibration Effect
Ranges B-M:
±0.1% URL/2g at 15 to 150 Hz
±0.1% URL/g at 15 to 2000 Hz
Range A:
±0.2% URL/g between 15 and 2000 Hz

Relative Humidity
0 - 100% RH

Vacuum Service
Full Vacuum

Service
Liquid, Gas, or Steam

PHYSICAL SPECIFICATIONS

Process Diaphragm
316L Stainless Steel
Hastelloy-C
Monel
Tantalum

Process Flanges
Carbon Steel
316L Stainless Steel
Hastelloy-C
Monel
Kynar

Process Connection
T5A Ranges B, D, F: 1/4" NPT
T5A Ranges H, J, K: 1/2" NPT
T5D All Ranges: 1/4" NPT
T5G All Ranges: 1/2" NPT

Transmitter Housing
Low copper cast aluminum with baked epoxy ester, urea formaldehyde melamine finish; NEMA 4X, CSA Enc. 4. Optional vertical housing :304 stainless steel.

Flange Bolts
Alloy Steel ASTM A354, Grade BD
Steam tracing (K Monel 500)
316L SST strain hardened

NACE (National Association of Corrosion Engineers)
Interpretation of NACE Specification MR-01-75, latest Revision, is that it applies only to process-wetted parts. NACE qualified selections are clearly identified under Ordering Information.

Fill Fluid
Silicone oil DC-200
Inert fill

Flange Gasket
Teflon silicate, ceramic filled

Electrical Connection
1/2" NPT

Weight (approximate – less seal system)

T5A Ranges B, D, F	8.2 lb. (3.71 g)
T5D ALL	8.2 lb. (3.71 g)
T5G ALL	6.1 lb. (2.81 g)
T5A Ranges H, J, K	6.1 lb. (2.81 g)

DIMENSIONS

T5 SERIES ELECTRONIC PRESSURE TRANSMITTERS

T5D Ranges B, D, F, G

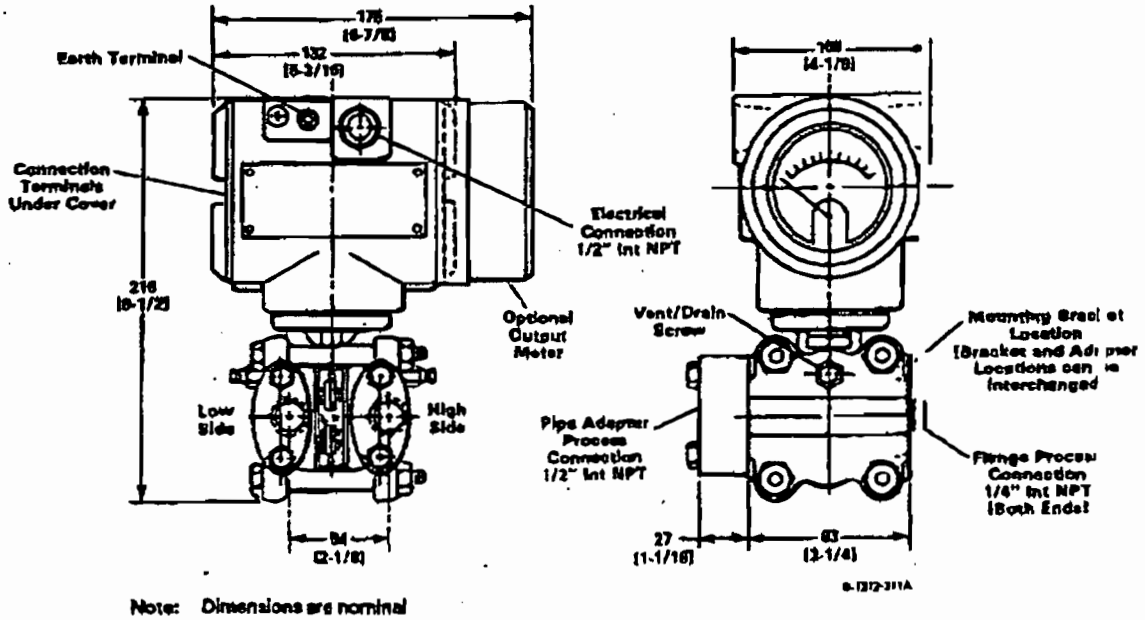

Note: Dimensions are nominal

Florida Department of
Environmental Protection

Lawton Chiles
Governor

Twin Towers Office Building
2600 Blair Stone Road
Tallahassee, Florida 32399-2400

Virginia B. Wetherell
Secretary

October 12, 1993

CERTIFIED MAIL - RETURN RECEIPT REQUESTED

Mr. Tony Saunders, Plant Manager
Florida Solite Company
P. O. Box 297
Green Cove Springs, Florida 32043

Re: File No. AC10-222486, Clay Kilns Nos. 1, 1A, and 5

Dear Mr. Saunders:

Florida Solite Company's reply to our December 22, 1992, letter did not provide all of the information requested. Some of the information provided will have to be clarified. Since December 22, 1992, the legislature has adopted new statutory requirements for hazardous waste incineration that may apply to Florida Solite Company and must be considered in processing this application. Please provide the following information needed to complete your application.

1. If baghouse No. 1 were approved, can more than 2 kilns be operated at the same time (2 kilns using baghouses and 1 kiln using a scrubber)? If not, what would prevent the operation of 3 kilns at the same time?

2. Provide a description of the vapor recovery system for the 20,000 gallon tanks discussed in Attachment 4 of your reply.

3. What is the "admixtures" used in the hot end of the kiln and are they emitted to the atmosphere (Attachment 5 of your reply)?

4. In paragraph 3.2.2 of Attachment 5 you noted that the raw material is routinely analyzed for metals, chlorine, ash and organics. Please describe the ash analysis.

5. How accurate is the belt scale that has been selected to measure the clay feed to the kilns? Will each kiln have its own belt scale? If not, how will the feed rate to each kiln be determined when more than one kiln is in operation?

6. It is not clear from the process drawing in Attachment 7 how the fines are transferred from kilns 1/1A to the dust silo. Please explain.

Printed on recycled paper.

18. If Florida Solite Company cannot currently burn such hazardous waste in kiln 1 or 1A using the existing scrubber and water cooling/settling pond system, please describe what additional state and federal permits would be necessary for kilns 1 and 1A to be allowed to burn such waste in compliance with all regulation.

19. What will be accomplished by the addition of baghouse 1 at this facility? Specifically, will the second baghouse increase the quantity of hazardous waste that can be burned at this facility?

20. What were the actual emissions (F.A.C. Rule 17-210.200) of each criteria/noncriteria pollutant from kilns 1/1A during the last 2 years (approximately Oct. 1991 to Oct. 1993) and the last 2 representative years of operation?

21. What will be the potential increase in emissions of each criteria/noncriteria pollutant if the current application is approved? Please perform any additional modeling required if the responses to questions 19 and 20 generate the need for it.

22. What are the cumulative impacts (inhalation, ingestion, skin contact) upon human health and the environment from the potential emissions of this facility?

23. Please propose a Maximum Achievable Control Technology for the control of mercury emissions from these kilns.

The Department will resume processing this application after receipt of the requested information. If you have questions on this matter, please write to me or call Preston Lewis at (904) 488-1344.

Sincerely,

John C. Brown, Jr., P.E.
Administrator
Air Permitting and Standards

JB/WH/bjb

cc: Johnny Cole, NED
John Koogler, P.E.
Bill Congdon, OGC
Tom Maurer, Foley & Lardner

7. Provide the requested information on the temperature and pressure monitors when it is available (question 8 of DEP Dec. 22 letter).

8. We requested a study to confirm that Florida Solite Company can correlate the sulfur dioxide emissions from the kilns as determined with a continuous monitor with an earlier sulfur analysis of the clay. For technical reasons, this study should use kiln 1A which has a monitor. Please clarify your plans for this study.

9. Describe the evaluation of all LBM that is not supplied by Oldover Corporation. Who are the other suppliers of LBM?

10. What independent checks of the analysis of LBM provided by Oldover Corporation are done by Florida Solite Company?

11. What is the maximum halogen content of the LBM that will be used by Florida Solite Company? How is this determined and controlled?

12. Does Florida Solite Company or Oldover Corporation accept waste containing organic mercury, such as K071?

13. Please submit the trial burn plans, when available (question 26 of DEP Dec. 22 letter).

14. Please provide proof of publication of the Notice of Application.

15. Does Florida Solite Company burn LBM that may be classifiable as hazardous waste under any state or federal rule or regulation? If so, please identify the rules or regulations applicable to the waste.

16. Please describe whether Florida Solite Company can currently burn such waste in kilns 1 and 1A using the existing scrubber and water cooling/settling pond system and still comply with all existing state and federal hazardous waste regulatory requirements.

17. If Florida Solite Company cannot currently burn such hazardous waste in kiln 1 or 1A using the existing scrubber and water cooling/settling pond system and still comply with all existing state and federal hazardous waste regulatory requirements, please describe what modifications would have to be made to kilns 1 and 1A and/or controls to allow burning such waste in compliance with all regulations.

SENDER:

- Complete items 1 and/or 2 for additional services.
- Complete items 3, and 4a & b.
- Print your name and address on the reverse of this form so that we can return this card to you.
- Attach this form to the front of the mailpiece, or on the back if space does not permit.
- Write "Return Receipt Requested" on the mailpiece below the article number.
- The Return Receipt will show to whom the article was delivered and the date delivered.

I also wish to receive the following services (for an extra fee):

1. ☐ Addressee's Address
2. ☐ Restricted Delivery

Consult postmaster for fee.

3. Article Addressed to:
Mr. Tony Saunders
Plant Manager
Florida Solite Company
P.O. Box 297
Green Cove Springs, FL
32043

4a. Article Number
P 230 524 284

4b. Service Type
☐ Registered ☐ Insured
☒ Certified ☐ COD
☐ Express Mail ☐ Return Receipt for Merchandise

7. Date of Delivery
OCT 19 1993

5. Signature (Addressee)

8. Addressee's Address (Only if requested and fee is paid)

6. Signature (Agent)

GREEN COVE SPRINGS
USPS - 32043

PS Form **3811**, December 1991 ☆U.S. GPO: 1992—323-402 **DOMESTIC RETURN RECEIPT**

Thank you for using Return Receipt Service.

Is your RETURN ADDRESS completed on the reverse side?

P 230 524 284

UNITED STATES POSTAL SERVICE

Receipt for Certified Mail

No Insurance Coverage Provided
Do not use for International Mail
(See Reverse)

Sent to Mr. Tony Saunders	
Street and No. P.O. Box 297	
P.O., State and ZIP Code Green Cove Springs, FL	
Postage	$
Certified Fee	
Special Delivery Fee	
Restricted Delivery Fee	
Return Receipt Showing to Whom & Date Delivered	
Return Receipt Showing to Whom, Date, and Addressee's Address	
TOTAL Postage & Fees	$
Postmark or Date mailed: 10/12/93 AC 10-222486	

PS Form **3800**, June 1991

RECEIVED
SEP 13 1993
Division of Air
Resources Management

RESPONSE TO FDEP ISSUES
PERMIT APPLICATION FOR KILNS 1 AND 1A

FLORIDA SOLITE COMPANY
GREEN COVE SPRINGS, FLORIDA

SEPTEMBER 1993

PREPARED BY:

KOOGLER & ASSOCIATES
ENVIRONMENTAL SERVICES
4014 N.W. 13TH STREET
GAINESVILLE, FLORIDA 33609
(904) 377-5822

DEP ROUTING AND TRANSMITTAL SLIP

TO: (NAME, OFFICE, LOCATION)

1. C. Holladay
2. ARM BAR - Tally.
3. MS 5505
4.
5.

PLEASE PREPARE REPLY FOR:

____ SECRETARY'S SIGNATURE

____ DIV/DIST DIR SIGNATURE

____ MY SIGNATURE

____ YOUR SIGNATURE

____ DUE DATE _____

ACTION/DISPOSITION

____ DISCUSS WITH ME

____ COMMENTS/ADVISE

____ REVIEW AND RETURN

____ SET UP MEETING

____ FOR YOUR INFORMATION

____ HANDLE APPROPRIATELY

____ INITIAL AND FORWARD

____ SHARE WITH STAFF

____ FOR YOUR FILES

COMMENTS:

RECEIVED
FEB 20 1995
Bureau of
Air Regulation

FROM: Jerry Kissel DATE: FEB 17 1995 PHONE: SC 542-6100 Ext. 107

DEP 15-026 (12/93)

KOOGLER & ASSOCIATES
ENVIRONMENTAL SERVICES
4014 NW THIRTEENTH STREET
GAINESVILLE, FLORIDA 32609
904/377-5822 • FAX 377-7158

KA 150-90-07

September 10, 1993

RECEIVED
SEP 13 1993
Division of Air
Resources Management

Mr. John C. Brown, Jr.
Florida Department of
Environmental Protection
Twin Towers Office Building
2600 Blair Stone Road
Tallahassee, FL 32399-2400

Subject: Additional Information
Florida Solite Company
Ducting Kilns 1 and 1A to Baghouse
Permit File No. AC10-222486

Dear Mr. Brown:

This is in response to your letter dated December 22, 1992, requesting additional information on the above project.

In addition to the request to duct Kiln 1/1A to the Kiln 5 baghouse (Baghouse 5), Florida Solite would like to amend the above referenced permit application to request the installation of an identical baghouse (Baghouse 1) for Kiln 1/1A and associated ducting. The kiln ducting would allow the following operating scenarios:

A. Kiln 1 or 1A to Baghouse 1
B. Kiln 1 or 1A to Baghouse 5
C. Kiln 5 to Baghouse 1
D. Kiln 5 to Baghouse 5

Please note that only one kiln will be operated per baghouse, and only two kilns will be operated on baghouses at any one time. The kilns will share the clay fines and lime storage bins. Please note that this request will not alter the review of the application in any way.

The following responses are in the order of the questions raised by FDEP.

1. **A copy of <u>approved</u> Permit No. AC10-197099 (proposed baghouse for Kiln No. 5) or plans/ specification for another air pollution control system to control the emissions from kilns nos. 1 and 1A. (This action cannot be completed until proposed permit AC10-197099 is issued.)**

RESPONSE:

Attachment 1 contains a copy of the approved air construction permit No. AC10-197099 for a baghouse for Kiln 5. Specifications for the second baghouse, requested above, will be identical to the first.

2. **Brochure or specification for the baghouse under consideration to control the emissions from the kilns.**

RESPONSE:

Attachment 2 contains the information requested for the identical Baghouses 1 and 5. Please note that for each baghouse stack, the proposed height and diameter have been revised from 65 feet and 5 feet, to 72 feet and 4.33 feet, respectively.

Ambient air impacts, based on the originally proposed and revised baghouse stack dimensions, were evaluated using the ISC2 model, version 93109. The modeling results summarized in Attachment 3 indicate a reduction in the predicted ambient air impacts as a result of the revised stack design. The modeling output is presented in the Appendix.

3. **Will any proposed baghouse have a bypass stack? If so, what are the maximum emissions of the criteria and noncriteria pollutants when the baghouse is being bypassed? What is the maximum ambient air impact of these emissions? What is the maximum duration of the bypass?**

RESPONSE:

The proposed baghouses will not have a bypass stack installed.

4. **Describe the operation and maintenance of the hazardous waste fuel system and air pollution control system.**

RESPONSE:

Information on the operation and maintenance of the hazardous waste fuel system and air pollution control system, extracted from the RCRA permit application submitted to the Florida Department of Environmental Protection's Hazardous Waste Division, is presented in Attachment 4.

5. Describe the automatic LBM feed cutoff system.

RESPONSE:

A description of the automatic LBM feed cutoff system, extracted from the RCRA permit application submitted to the Florida Department of Environmental Protection's Hazardous Waste Division, is provided in Attachment 5.

6. How will the process/production rates of each kiln be determined? Please provide a brochure/specification for any proposed scale.

RESPONSE:

A Ramsey belt scale system will be utilized to measure the raw feed input to each kiln, which is an indication of the process rate. Attachment 6 contains information on the proposed system.

7. Provide a description and drawing of the handling and disposal system for the captured clay/lime fines.

RESPONSE:

Storage bins will be installed to handle the lime and clay fines. These bins will each be equipped with a baghouse to capture the emissions from their use. The lime and clay fines will be conveyed in an enclosed system and will not be exposed to the wind or rain prior to their use.

As the clay fines bin will receive material from two baghouses, the projected clay fines bin exhaust rate has been revised from 400 to 800 cubic feet per minute. Revised page 6b of 12 in the application form; and pages 7 and 8 in the text of the application, are presented in Attachment 7.

From the clay fines bin, the material will be pneumatically conveyed to a proposed pug mill (in the raw material shed) and/or to a proposed clinker hopper (in the product sizing and storage area). Both the pug mill and the clinker hopper will be equipped with a filter receiver to control emissions of particulate matter from the units.

Additional information on the lime and clay fines storage and handling system, including the pug mill and clinker hopper filter receivers, is presented in Attachment 7. Pages 4, 5, and 6 of 12 in the air permit application form have been prepared for the pug mill and clinker hopper, and are also attached.

8. Provide brochures, specifications, and drawings for any monitors (CO, temperature, pressure drop, etc.) that will be installed on the kilns.

RESPONSE:

Attachment 8 contains the information requested on the following continuous monitors which will be utilized for compliance with the BIF regulations and air permit requirements:

a. Carbon monoxide monitor
b. Oxygen monitor
c. LBM flow monitor

Information from the equipment suppliers for the temperature and pressure monitors will be forwarded to FDEP when received.

9. Will the currently required sulfur dioxide continuous emissions monitor at this facility be relocated as part of the proposed modification?

RESPONSE:

The current Kiln 1A permit requires the monitoring of sulfur dioxide emissions on a continuous basis. Accordingly, whenever Kiln 1A is operated, whether with a scrubber or a baghouse, the sulfur dioxide continuous emission monitor will be relocated to the appropriate stack.

10. Please provide a copy of the study showing that the sulfur dioxide emissions from the kiln as determined by a continuous emission monitor can be accurately estimated by a material balance. What is the maximum sulfur content in the clay?

RESPONSE:

A study of the sulfur balance for Kiln 5, required by Specific Condition 2 of permit AC10-197099, will be conducted after the installation of the baghouse system. The results of the study on Kiln 5 will provide a basis for the evaluation of a sulfur balance for Kiln 1/1A.

11. What alternative methods to monitor sulfur dioxide emissions from this facility will be used should the material balance proposal be found to be unreliable?

RESPONSE:

Should the material balance proposal for Kiln 5 prove unreliable, a continuous emissions monitor for sulfur dioxide will be utilized for Kiln 5.

12. What means will be used to contain and minimize fugitive emissions from LBM caused by any spills during handling or equipment failure?

RESPONSE:

The LBM is transferred via a closed pipeline subjected to a Leak Detection and Repair Program which will minimize spills and fugitive emissions from the handling of LBM. The LBM fuel line will be equipped with automatic feed shut-off devices in the event of an equipment failure. Fugitive emissions from a spill will be mitigated by the use of absorbent material and prompt clean-up, as provided for in the facility contingency plan.

13. Please explain why you concluded the new source performance standards for nonmetallic mineral processing plants (40 CFR 60, Subpart 000) does not apply to this facility.

RESPONSE:

The proposed project is not subject to 40 CFR 60, Subpart 000, as it will not result in an increase in the emissions of particulate matter, the affected pollutant (refer to submittal on "Rule Summaries" dated December 17, 1992, in FDEP's Kiln 5 permit file).

14. Please explain why you concluded the NESHAP for beryllium and equipment leaks (40 CFR 61 Subparts C and J) does not apply to this facility.

RESPONSE:

The provisions of 40 CFR 61, Subpart C, do not apply to the proposed project. During the permit application review for installation of a baghouse on Kiln 5, EPA clarified that the provisions of the Subpart did not apply to a lightweight aggregate plant (refer to submittal on "Rule Summaries" dated December 17, 1992, in FDEP's Kiln 5 permit file).

The provisions of 40 CFR 61, Subpart J, do not apply to the proposed project as the benzene content of the fuel utilized by Florida Solite is below the applicable NESHAPS threshold (refer to submittal on "Rule Summaries" dated December 17, 1992, in FDEP's Kiln 5 permit file).

15. Who supplies LBM to this facility?

RESPONSE:

Oldover Corporation normally supplies LBM to Florida Solite.

16. Provide a description of the LBM sampling and analysis program. What analyses are run on the LBM received by Florida Solite Company and by who? Describe frequency of analyses.

RESPONSE:

The material is sampled and analyzed by Oldover Corporation in accordance with the waste analysis plan presented as Attachment 9. LBM in the burn tank, prior to being fired in a kiln, is analyzed by Florida Solite (at the Oldover laboratory), at a minimum, for chlorides and metals regulated by BIF rules.

Demonstration of compliance with air permit limitations for the PCBs and sulfur content of the LBM is based on the initial material screening by Oldover Corporation.

17. What chemicals and metals are in the LBM and what is the maximum concentration of these pollutants?

RESPONSE:

A list of metals and other constituents in LBM and their maximum allowable concentrations is presented in Attachment 10, Table 2.

18. What is the lowest sulfur content of No. 2 fuel oil that the fuel supplier will guarantee to the applicant?

RESPONSE:

Florida Solite will not burn No. 2 fuel oil with a sulfur content greater than 0.7% sulfur.

19. Please estimate the emissions of dioxins and furans from this facility.

RESPONSE:

Florida Solite does not accept fuel subject to the wastecodes for dioxins and furans. Also, fuel containing greater than 5 ppm PCBs is not burned. EPA has determined that formation of dioxins and furans is not significant in air pollution control devices with inlet temperatures below 450°F. The operation of the baghouse system includes safeguards to trigger an automatic cut-off should the temperature of the gas stream entering the baghouse exceed 450°F. A copy of the Federal Register Preamble explaining EPA's determination is presented in Attachment 11.

20. Please provide a table showing the maximum emissions of criteria and noncriteria pollutants from the proposed baghouse for Kiln No. 5 (summary of what is in current application).

RESPONSE:

Table 3 in Attachment 10 provides a summary of the maximum emissions of criteria and noncriteria pollutants from Baghouses 1 and 5, based on the air emissions and ambient air impacts evaluation requested by FDEP.

21. Please provide a table showing the maximum emissions of criteria and noncriteria pollutants from the scrubbers.

RESPONSE:

It is our understanding that a table showing the maximum emissions of criteria and noncriteria pollutants from the scrubbers is not required to evaluate the subject permit application submitted for the installation of baghouses at the Florida Solite facility. Please note that the facility is already permitted to operate with scrubbers. Furthermore, documentation has been provided to FDEP during the permit application review for the Kiln 5 baghouse, that the use of a baghouse in place of a scrubber will result in a reduction in air emissions from the facility.

22. What is the maximum ambient air impact from the facility when one kiln is burning LBM and the other two kilns are using the scrubbers and when all three kilns are using the scrubbers? Please use time periods in the regulations/policy, i.e. - 8-hour, 24-hour, and annual impacts for toxics; 3-hr, 24-hr, and annual impacts for sulfur dioxide; 30-day for beryllium, etc.

RESPONSE:

The maximum predicted ambient air impacts from the facility operating on the proposed baghouses are presented in Table 4, Attachment 10. The results of the ambient air quality analysis demonstrate compliance with applicable ambient air quality standards. Regarding operation on scrubbers, refer to Response 21. The modeling output is presented in the Appendix.

23. Please perform a health risk analysis based on the maximum impacts of the emissions of the toxic components.

RESPONSE:

An analysis for the proposed baghouse project (see the spreadsheet in Attachment 10) reflects an acceptable incremental lifetime cumulative cancer risk resulting from the ambient air impacts of carcinogenic metals to the maximum exposed individual (MEI) of less than 1 in 100,000 (acceptable risk per EPA and FDEP).

24. Are any metals or chlorides in the clay? How are these constituents determined? What is the frequency of analysis?

RESPONSE:

Table 2 in Attachment 10 includes a summary of the level of metals and chlorides expected in the clay, based on information evaluated for pre-compliance certification under BIF regulations. The raw feed stream will be sampled and analyzed weekly.

25. Were the metals in the clay, coal being burned in the other kiln, and metals in the recycle clay/lime fines considered in calculating the maximum metals and chlorides that could be in the LBM?

RESPONSE:

The analysis presented in the spreadsheet in Attachment 10 includes the consideration and accounting of metals and chlorides from clay, fines, LBM, and coal.

26. Please provide a copy of the proposed trial burn for this facility.

RESPONSE:

A trial burn plan was submitted to EPA and the Florida Hazardous Waste Division as part of Florida Solite's RCRA permit application. In response to comments and additional technical information available to Florida Solite, a completely revised trial burn plan is currently being prepared for submission by November 30. A copy of the revised trial burn plan will be provided to the Bureau of Air Regulation, if requested, when it is submitted to EPA and the Florida Hazardous Waste Division.

27. Please provide a copy of the RCRA application for this facility or note to whom within the Department the application was submitted.

RESPONSE:

The RCRA Permit Application for this facility was submitted to Mr. Satish Kastury of the Florida Department of Environmental Protection, Hazardous Waste Division, Tallahassee, Florida.

If you have questions, please do not hesitate to give me call.

Very truly yours,

KOOGLER & ASSOCIATES

John B. Koogler, Ph.D., P.E.

JBK:PAR:jt

c: T. Saunders, Solite
J. Jewett, Solite
G. Eure, Solite
A. Galliano, Oldover
G. Franklin, Oldover
J. Hands
J. Cole, N.E. Dist
S. Kastury
B. Congdon OGC

KOOGLER & ASSOCIATES

ATTACHMENT 1

PERMIT FOR KILN 5 BAGHOUSE

Florida Department of Environmental Regulation

Twin Towers Office Bldg. • 2600 Blair Stone Road • Tallahassee, Florida 32399-2400

Lawton Chiles, Governor

Virginia B. Wetherell, Secretary

PERMITTEE:
Florida Solite Company
P. O. Box 297
Green Cove Springs, FL 32043

Permit Number: AC 10-197099
Expiration Date: May 1, 1994*
County: Clay
Latitude/Longitude: 30°04'07"N
81°45'17"W
Project: Kiln No. 5 Modification

This permit is issued under the provisions of Chapter 403, Florida Statutes, and Florida Administrative Code Chapters 17-212 and 17-4. The above named permittee is hereby authorized to perform the work or operate the facility shown on the application and approved drawings, plans, and other documents attached hereto or on file with the Department and made a part hereof and specifically described as follows:

Authorization to install a Fuller dust collector (or equivalent) and lime injection system on kiln No. 5. Also included in this project is a clay fines bin controlled with a Fuller Model 9-DS-8 dust collector (or equivalent) and a lime bin controlled by a Fuller Model 9-DS-8 dust collector (or equivalent). The existing scrubber may be used to control the emissions from kiln No. 5 only when liquid burnable material (LBM) is not being used as fuel in this kiln. This kiln is located at the permittee's lightweight aggregate manufacturing facility (SIC 3295) on County Road 209A, north of Green Cove Springs, Clay County, Florida 32043. The UTM coordinates of this site are Zone 17, 427.3 km E and 3326.5 km N.

*This permit is void if construction does not commence within 18 months of its issuance, if construction is discontinued for more than 18 months, or if construction is not completed and the plant is not placed in operation within a reasonable time.

The source shall be constructed in accordance with the permit application, plans, documents, amendments and drawings, except as otherwise noted in the General and Specific Conditions.

Attachments are listed below:
1. Application received May 17, 1991.
2. Revised application received June 19, 1991.
3. Koogler & Associates' letter dated November 25, 1991.
4. DER letter dated January 28, 1992.
5. Koogler & Associates letter dated April 1, 1992.
6. Attachment 10, Florida Solite Construction Application for Kiln 1 and 1A.
7. Koogler and Associates' letter dated December 6, 1991.
8. Memorandum on Florida Solite Company dated November 20, 1992.
9. Final Order (DOAH Case No. 92-4961).

Recycled Paper
Printed with Soy Based Inks

GENERAL CONDITIONS:

1. The terms, conditions, requirements, limitations, and restrictions set forth in this permit are "Permit Conditions" and are binding and enforceable pursuant to Sections 403.161, 403.727, or 403.859 through 403.861, Florida Statutes. The permittee is placed on notice that the Department will review this permit periodically and may initiate enforcement action for any violation of these conditions.

2. This permit is valid only for the specific processes and operations applied for and indicated in the approved drawings or exhibits. Any unauthorized deviation from the approved drawings, exhibits, specifications, or conditions of this permit may constitute grounds for revocation and enforcement action by the Department.

3. As provided in Subsections 403.087(6) and 403.722(5), Florida Statutes, the issuance of this permit does not convey any vested rights or any exclusive privileges. Neither does it authorize any injury to public or private property or any invasion of personal rights, nor any infringement of federal, state or local laws or regulations. This permit is not a waiver of or approval of any other Department permit that may be required for other aspects of the total project which are not addressed in the permit.

4. This permit conveys no title to land or water, does not constitute State recognition or acknowledgement of title, and does not constitute authority for the use of submerged lands unless herein provided and the necessary title or leasehold interests have been obtained from the State. Only the Trustees of the Internal Improvement Trust Fund may express State opinion as to title.

5. This permit does not relieve the permittee from liability for harm or injury to human health or welfare, animal, or plant life, or property caused by the construction or operation of this permitted source, or from penalties therefore; nor does it allow the permittee to cause pollution in contravention of Florida Statutes and Department rules, unless specifically authorized by an order from the Department.

6. The permittee shall properly operate and maintain the facility and systems of treatment and control (and related appurtenances) that are installed or used by the permittee to achieve compliance with the conditions of this permit, as required by Department rules. This provision includes the operation of backup or auxiliary facilities or similar systems when necessary to achieve compliance with the conditions of the permit and when required by Department rules.

GENERAL CONDITIONS:

7. The permittee, by accepting this permit, specifically agrees to allow authorized Department personnel, upon presentation of credentials or other documents as may be required by law and at a reasonable time, access to the premises, where the permitted activity is located or conducted to:

a. Have access to and copy any records that must be kept under the conditions of the permit;

b. Inspect the facility, equipment, practices, or operations regulated or required under this permit; and

c. Sample or monitor any substances or parameters at any location reasonably necessary to assure compliance with this permit or Department rules.

Reasonable time may depend on the nature of the concern being investigated.

8. If, for any reason, the permittee does not comply with or will be unable to comply with any condition or limitation specified in this permit, the permittee shall immediately provide the Department with the following information:

a. a description of and cause of non-compliance; and

b. the period of noncompliance, including dates and times; or, if not corrected, the anticipated time the non-compliance is expected to continue, and steps being taken to reduce, eliminate, and prevent recurrence of the non-compliance.

The permittee shall be responsible for any and all damages which may result and may be subject to enforcement action by the Department for penalties or for revocation of this permit.

9. In accepting this permit, the permittee understands and agrees that all records, notes, monitoring data and other information relating to the construction or operation of this permitted source which are submitted to the Department may be used by the Department as evidence in any enforcement case involving the permitted source arising under the Florida Statutes or Department rules, except where such use is prescribed by Sections 403.73 and 403.111, Florida Statutes. Such evidence shall only be used to the extent it is consistent with the Florida Rules of Civil Procedure and appropriate evidentiary rules.

GENERAL CONDITIONS:

10. The permittee agrees to comply with changes in Department rules and Florida Statutes after a reasonable time for compliance, provided, however, the permittee does not waive any other rights granted by Florida Statutes or Department rules.

11. This permit is transferable only upon Department approval in accordance with Florida Administrative Code Rules 17-4.120 and 17-30.300, F.A.C., as applicable. The permittee shall be liable for any non-compliance of the permitted activity until the transfer is approved by the Department.

12. This permit or a copy thereof shall be kept at the work site of the permitted activity.

13. The permittee shall comply with the following:

a. Upon request, the permittee shall furnish all records and plans required under Department rules. During enforcement actions, the retention period for all records will be extended automatically unless otherwise stipulated by the Department.

b. The permittee shall hold at the facility or other location designated by this permit records of all monitoring information (including all calibration and maintenance records and all original strip chart recordings for continuous monitoring instrumentation) required by the permit, copies of all reports required by this permit, and records of all data used to complete the application for this permit. These materials shall be retained at least three years from the date of the sample, measurement, report, or application unless otherwise specified by Department rule.

c. Records of monitoring information shall include:

- the date, exact place, and time of sampling or measurements;
- the person responsible for performing the sampling or measurements;
- the dates analyses were performed;
- the person responsible for performing the analyses;
- the analytical techniques or methods used; and
- the results of such analyses.

14. When requested by the Department, the permittee shall within a reasonable time furnish any information required by law which is

GENERAL CONDITIONS:

needed to determine compliance with the permit. If the permittee becomes aware that relevant facts were not submitted or were incorrect in the permit application or in any report to the Department, such facts or information shall be corrected promptly.

SPECIFIC CONDITIONS:

Construction Requirements

1. The construction of the dust collectors, lime injection system, and clay fines bin shall conform to the plans in the application. A programmable logic controller shall be installed on kiln No. 5 that will allow LBM to be burned only when all of the flue gas from the kiln pass through the kiln's dust collector.

2. The permittee shall evaluate the overall sulfur balance of the kiln system at this facility prior to the expiration of this permit. The evaluation shall be based on the test protocol attached to Koogler & Associates' April 1, 1992, letter. The sulfur material balance shall include sulfur analysis of the clay feed, fuels, aggregate product, and stack emissions as determined from the continuous emissions monitor. The emission factors established shall be used to calculate the sulfur dioxide emissions from kiln No. 5.

3. The dust collector serving kiln No. 5 shall be equipped with instruments that continuously record the pressure drop when the unit is in operation. The instrument shall be properly calibrated and maintained.

Emission Restrictions

4. Particulate matter emissions from kiln No. 5 dust collector shall not exceed any of the following: 0.04 gr/dscf corrected to 7% oxygen, 11.8 lbs/hr, 51.7 TPY, and 15% opacity.

5. Sulfur dioxide emissions shall not exceed 227 lbs/hr (1 hr. max.), 84.5 lbs/hr (30 day avg.), and 370 TPY.

6. Nitrogen oxides emissions shall not exceed 24.0 lbs/hr and 105 TPY.

7. Particulate matter emissions from the lime bin dust collector shall not exceed any of the following: 0.02 gr/dscf, 0.12 lbs/hr, 0.5 TPY, or 5% opacity.

SPECIFIC CONDITIONS:

8. Particulate matter emissions from the clay fines bin dust collector shall not exceed any of the following: 0.02 gr/dscf, 0.06 lbs/hr, 0.3 TPY, or 5% opacity.

9. The combined emissions of metals and other toxic pollutants from all sources at this facility shall not result in ambient air concentrations predicted by Department approved modeling that exceed the acceptable ambient air concentrations established for any toxic pollutant. This will be demonstrated by the permittee modeling the maximum expected emissions of the toxic metals and other hazardous air emissions which could be emitted by this facility. The demonstration that modeled rates do not result in ambient concentrations that exceed the air toxic reference concentration (ATRC) shall be made using the protocol in attachment 10 of the Air Construction Permit Application for Kilns 1 and 1A except where the Department's annual ATRC are more stringent than the EPA's Risk Specific Doses (RACs). In addition, stack measurements of the pollutants tested as required by Specific Condition No. 20 shall be modeled by the permittee and demonstrated to be below the ATRC established for those toxic pollutants. The modeling results must be approved by the Department. The tested emissions rate cannot exceed the maximum estimated rate used to show compliance with the Department's ATRC.

10. Lead emissions from Kiln No. 5 shall not exceed one-third of the emissions allowed under the Boiler and Industrial Furnace (BIF) Rule (40 CFR 266.106(d).

11. The LBM, as burned, shall not contain mercury at concentrations greater than 0.2 mg/l or the concentration allowed under 40 CFR 266, Subpart H, whichever is most restrictive. The permittee shall confirm that the LBM, as burned, does not contain mercury in excess of the most restrictive concentration by sampling and analysis for mercury as required by the Boiler and Industrial Furnace Rule (40 CFR 266, Subpart H). The Permittee may burn LBM containing mercury at concentrations greater than 0.2 mg/l only to the extent necessary during stack testing for the purpose of demonstrating BIF Rule compliance, so long as Florida DER and/or U.S. EPA have been notified.

12. The operation of this source shall not result in the emissions of air pollutants which cause or contribute to an objectionable odor pursuant to F.A.C. Rule 17-2.600(c)2.

13. Reasonable precautions shall be used to minimize unconfined emissions of particulate matter generated by this operation pursuant to F.A.C. Rule 17-2.610(3). Reasonable precautions shall be defined as the application of dust suppressants to the

SPECIFIC CONDITIONS:

material/operation listed in the following table when the visible emissions (maximum 6 minute rolling average) exceed the listed opacity:

Material/Operation	Visible Emissions
Raw Clay Feed Area	5
Coal Storage Area and Coal Handling Equipment	10
Discharges of Product from the Kiln into the Product Cooler	10
Handling and Storage of the Product	20

Also, particulate matter collected by the Kiln No. 5 dust collector shall be managed in enclosed tanks, containers, or conveyances so that it is shielded from wind and rain and shall not be placed on the ground prior to its use as a raw material or its incorporation into the aggregate product or its permitted disposal at a facility authorized to handle this material.

Operation Requirements

14. The kiln may operate continuously, 8760 hrs/yr.

15. Maximum clay input to the kiln shall not exceed 13.2 TPH (dry) or 21.3 TPH (wet). Production shall not exceed 11.0 TPH (dry). The permittee shall have calibrated instruments on site to continuously monitor the clay input or production of this kiln.

16. Maximum allowable heat input to the kiln shall not exceed 66 MMBtu/hr and 6.0 MMBtu/ton of product. A fuel input rate of 5500 lbs coal/hr containing up to 2.5% sulfur (maximum) or 733 gals LBM/hr containing up to 2.0% sulfur (maximum), 475 GPH No. 2 fuel oil containing a maximum of 0.5 percent sulfur (0.3 percent sulfur annual average), and/or 725 GPH of propane may be burned in this kiln provided the actual sulfur dioxide emissions standards established pursuant to Specific Condition No. 5 of this permit are not exceeded. When fuels are burned in combination, the maximum allowable heat input and sulfur dioxide emissions standards for the kiln shall not be exceeded.

17. The LBM shall not contain any hazardous waste that is listed for dioxin or derived from the dioxin-listed wastes F020, F021,

SPECIFIC CONDITIONS:

F022, F023, F026, or F027, organic cyanides, sulfide, mercaptans, insecticides, pesticides, herbicides, electroplating waste, or radioactive material above the detection level by the appropriate analytical procedure. The LBM can contain up to 5.0 ppm PCB provided all applicable requirements listed in 40 CFR 761 (July 1, 1992) are met. In addition to those conditions required by 40 CFR 761.20, the permittee shall document that the LBM contains less than 5.0 ppm PCB and has not been mixed with materials containing PCBs in concentrations of 50 ppm or greater. The LBM shall be tested for PCBs and radioactivity prior to acceptance at the facility. The permittee shall retain the manifest of each load for 3 years for Department inspection.

18. When burning LBM in kiln No. 5 at this facility, baghouse inlet temperature, carbon monoxide and oxygen concentration of the flue gas shall be continuously monitored downstream of the furnace but prior to their release to the atmosphere in the manner prescribed by the Boiler and Industrial Furnace Rule (40 CFR 266, Subpart H), and the kiln shall operate at a minimum temperature of 1800°F and at a minimum oxygen level of 6 percent, and a maximum flue gas temperature at the baghouse inlet of 450° F. The concentration of CO in the stack gases shall not exceed a maximum of 100 ppmv on an hourly rolling average basis, corrected to 7% oxygen, unless the Permittee complies with the alternative carbon monoxide and hydrocarbon standard prescribed by 40 CFR 266.104(c) and (f).

19. Kiln No. 5 shall achieve a minimum destruction and removal efficiency (DRE) of 99.99% for all organic hazardous constituents when burning hazardous LBM. Conformance with this requirement shall be demonstrated as required by 40 CFR 266.104(a).

Compliance Requirements

20. Kiln No. 5 shall be tested at 90 to 100% of its permitted capacity (11.9 to 13 TPH clay input (dry)) for the following pollutants:

Pollutant	Method* (40 CFR 60, Appendix A, 7/1/91)	Frequency	Comments**
PM	5	Annually	While burning high sulfur coal or LBM
SO_2	6	Annually	While burning high sulfur coal
NOx	7E	Every 5 yrs	
VE	9	Annually	While burning high sulfur coal or LBM

VOC	25	Every 5 yrs	While burning LBM
BIF Metals	EPA Multi/-Metal sampling train	Annually	While burning LBM
Organic***	VOST	Annually	While burning LBM. Analyze by Method 8240 of SW-846

* Or other methods with DER approval.

** Annual stack tests shall be conducted on the Kiln No. 5 baghouse. If either coal or LBM is burned less than 400 hours during any year, the specified tests may be conducted while the plant is burning whichever fuel is burned for more than 400 hours during such year. Tests shall be conducted on any air pollution control system that is used more than 400 hours during any year following initial testing of the baghouse.

*** Analyze for all volatile organic constituents listed in Method 8240.

Administrative Requirements

21. Stack test results shall be submitted to the Northeast District office within 45 days of the test.

22. When the Department, after investigation, has good reason (such as complaints, increased visible emissions, or questionable maintenance of control equipment) to believe that any applicable emission standard contained in this permit is being violated, it may require the owner or operator of the unit to conduct compliance tests which identify the nature and quantity of pollutant emissions from the source and to provide a report on the results of said tests to the Department.

23. The Northeast District office shall be notified in writing a minimum of 15 days in advance of any compliance tests to be conducted on this source.

24. The permittee, for good cause, may request that this construction permit be extended. Such a request shall be submitted to the Bureau of Air Regulation prior to 60 days before the expiration of the permit (F.A.C. Rule 17-4.090).

25. An application for an operation permit must be submitted to the Northeast District office at least 90 days prior to the expiration date of this construction permit. To properly apply for an operation permit, the applicant shall submit the appropriate application form, fee, certification that construction was

PERMITTEE:
Florida Solite Company

Permit Number: AC 10-197099
Expiration Date: May 1, 1994

SPECIFIC CONDITIONS:

completed noting any deviations from the conditions in the construction permit, and compliance test reports as required by this permit (F.A.C. Rules 17-4.055 and 17-4.220).

Issued this 2 day
of April, 1993

STATE OF FLORIDA DEPARTMENT OF ENVIRONMENTAL REGULATION

Howard L. Rhodes

Howard L. Rhodes, Director
Division of Air Resources Management

ATTACHMENT 2

BAGHOUSE SPECIFICATIONS

TOP LOAD PULSE-JET COLLECTOR PROPOSAL
Florida Solite

BHA Group, Inc.

Mr. George Eure
Ref: Kiln No. 5 50,000 ACFM Baghouse With Heat Exchanger

January 27, 1993
BHA Quote No.: 93-RA-0127-2

Application and Design Specifications

The following design specifications are based on design criteria supplied by customer:

Application	Kiln Ventilation	
Dust	Kiln Dust	
Filter Media	P84	
Number of Bags	960	
Number of Rows	60	
Max. Temperature	400 °F	204 °C
Air Volume Rate	50000 CFM	85000 m3/hr
Bag Diameter	4.63 in	117 mm
Bag Length	144 in	3658 mm
Total Cloth Area	13949 ft2	1295.9 m2
A/C Ratio	3.6 CFM/ft2	1.09 m/min
Can Velocity	191 ft/min	0.97 m/s
Module Length	427 in	10846 mm
Module Width	126 in	3200 mm
Total Height	334 in	8495 mm
Bottom Clearance	60 in	1524 mm
Housing Thickness	12Ga.	2.7 mm
Tubesheet Thickness	3/16"	4.8 mm

*Specifications subject to change based on final design engineering

Equipment Features and Description

The following is a description of each component included in this proposal. Each component supplied by BHA incorporates a series of quality control inspections to ensure high quality fabrication. The design of this equipment is based on our extensive experience in pulse-jet technology, providing you with reliability and high filtration efficiency through a single source supplier.

Factory Assembled Components
BHA units are provided with most components factory assembled for easy installation. This reduces installation costs and minimizes downtime. The pre-assembly assures components fit properly such as header assemblies, blowpipes, access doors, etc.

General Arrangement Drawings
General arrangement drawings will be provided for all equipment supplied for proper installation and archiving of the equipment. The drawings are generated using the latest CAD technology and can be provided in electronic form for editing into plant project drawings, if necessary.

CPM 2000® Continuous Particulate Monitor
The CPM 2000® is a reliable, virtually maintenance-free system for detection of leaking filter elements and continuous monitoring of particulate emissions. When calibrated in conjunction with isokinetic stack samples, the CPM 2000 will give precise, continuous measurements of particulate emissions. The CPM 2000 comes complete with 50' (15m) of coaxial cable, sensing heads, microprocessor, mounting flanges, air purge filter kit and sensor insulators for gas stream temperatures to 650° F (340° C). BHA can also furnish trained technicians to supervise the installation and calibration for an additional charge.

Heat Exchanger Specifications

	NORMAL	UPSET
Gas Flow Through Tubes (70°F @ 1 ATM)	30,000 SCFM	30,000 SCFM
Direction of Gas	Down	Down
Cooling Air Temperature	90°F	90°F
Inlet Gas Temperature	1,100°F	1,100°F
Outlet Gas Temperature	400°F	400°F
Pressure Drop Through Tubes	1.5" W.C.	2.5" W.C.

Construction Specifications

Number of Fans:	Three
Fan Horsepower:	25 HP TEFC
Tube Diameter:	3"

Inlet Plenum
1/4" A36 steel with stiffening to withstand 18" negative pressure with an expansion joint and a 20" x 24" bolted access door.

Walkways and Ladders
Walkways and ladders will provide access to each fan assembly and the inlet plenum access door.

In response to your recent inquiry, BHA's Engineered Systems Group is pleased to present the following proposal for a new top load pulse-jet baghouse. For convenience and clarity, we have broken down the quotation into sections, each being important to your full evaluation in awarding this contract.

The heat exchanger system we discussed during our meeting at the plant appears to be the most economical with out sacrificing quality and performance. The use of a heat exchanger will eliminate the requirement for water sprays, bleed-in dilution air and long duct runs. Also reduced will be the fan horsepower, compressed air consumption, installation time and costs, and the amount of maintenance required.

The system will consist of combining a heat exchanger and baghouse onto a common trough hopper (see sketch below). The heat exchanger will lower the gas stream temperature from 1,100°F to 400°F through the tube bundle prior to the filter bags. The dust laden gases will enter the top of the heat exchanger and fall down through the tube bundle into the trough hopper and then be filtered through the pulse-jet collector.

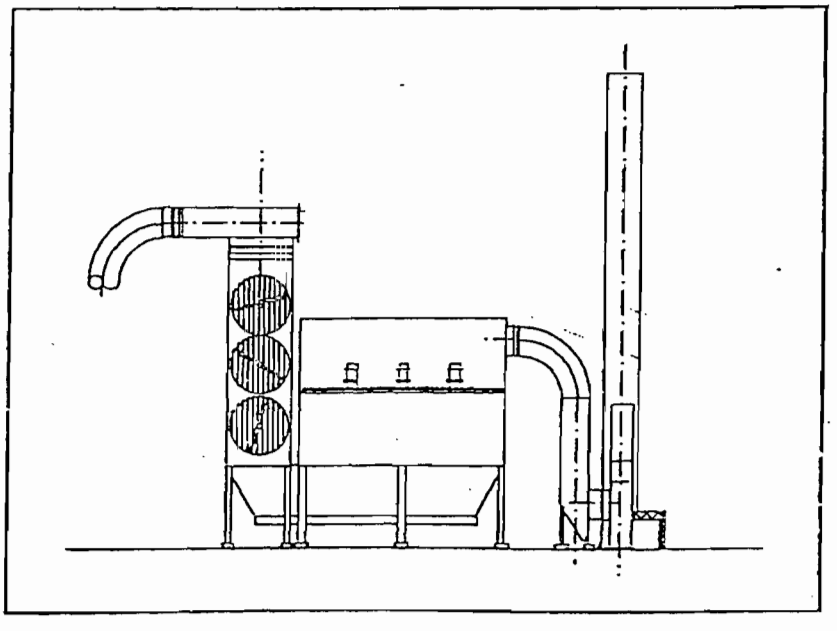

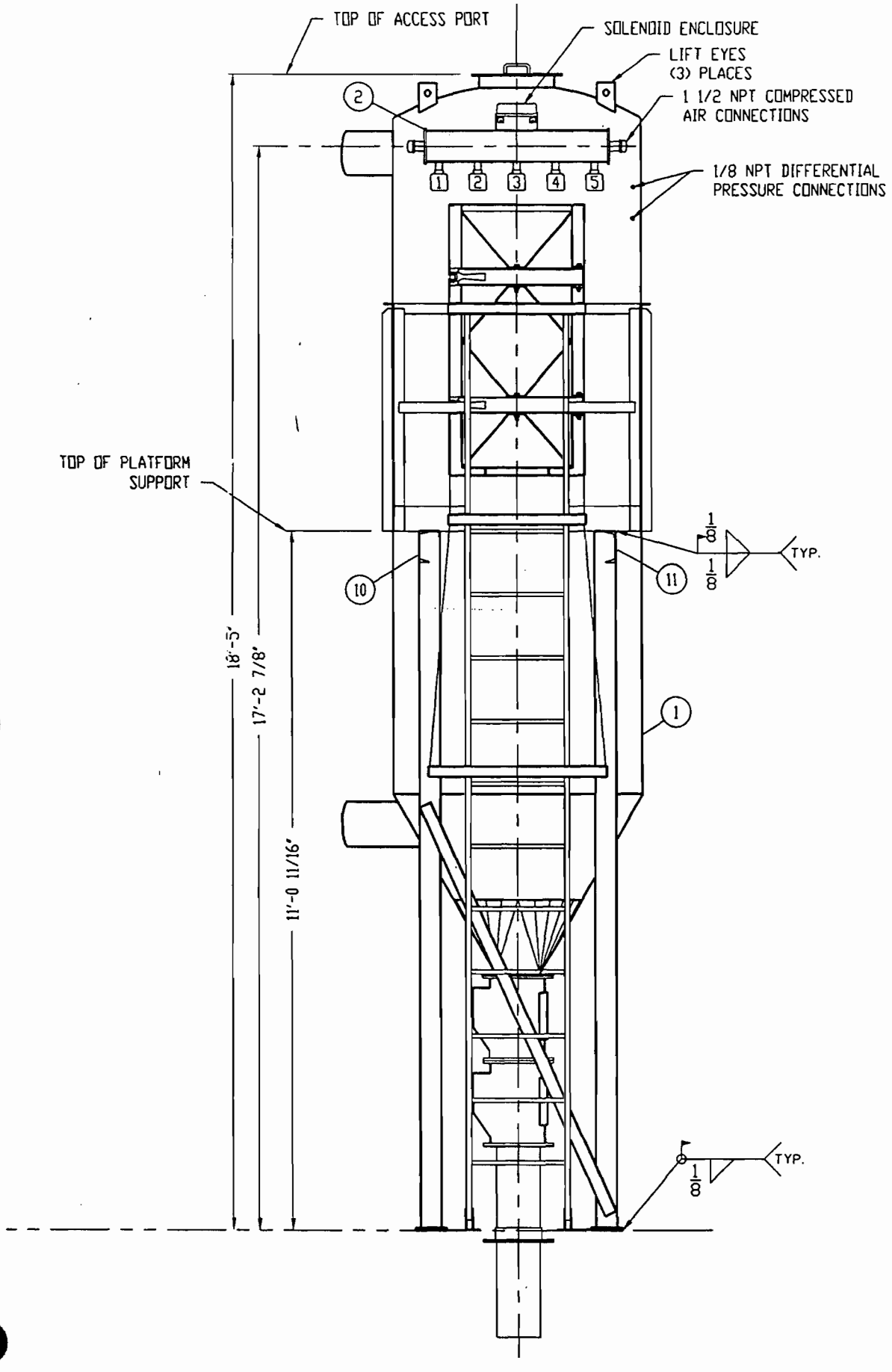
TOP OF ACCESS PORT
SOLENOID ENCLOSURE
LIFT EYES
(3) PLACES
1 1/2 NPT COMPRESSED
AIR CONNECTIONS
1/8 NPT DIFFERENTIAL
PRESSURE CONNECTIONS
TOP OF PLATFORM
SUPPORT
1/8
1/8
TYP.
1/8
TYP.
18'-5"
17'-2 7/8"
11'-0 11/16"
1
2
10
11
1
2
3
4
5

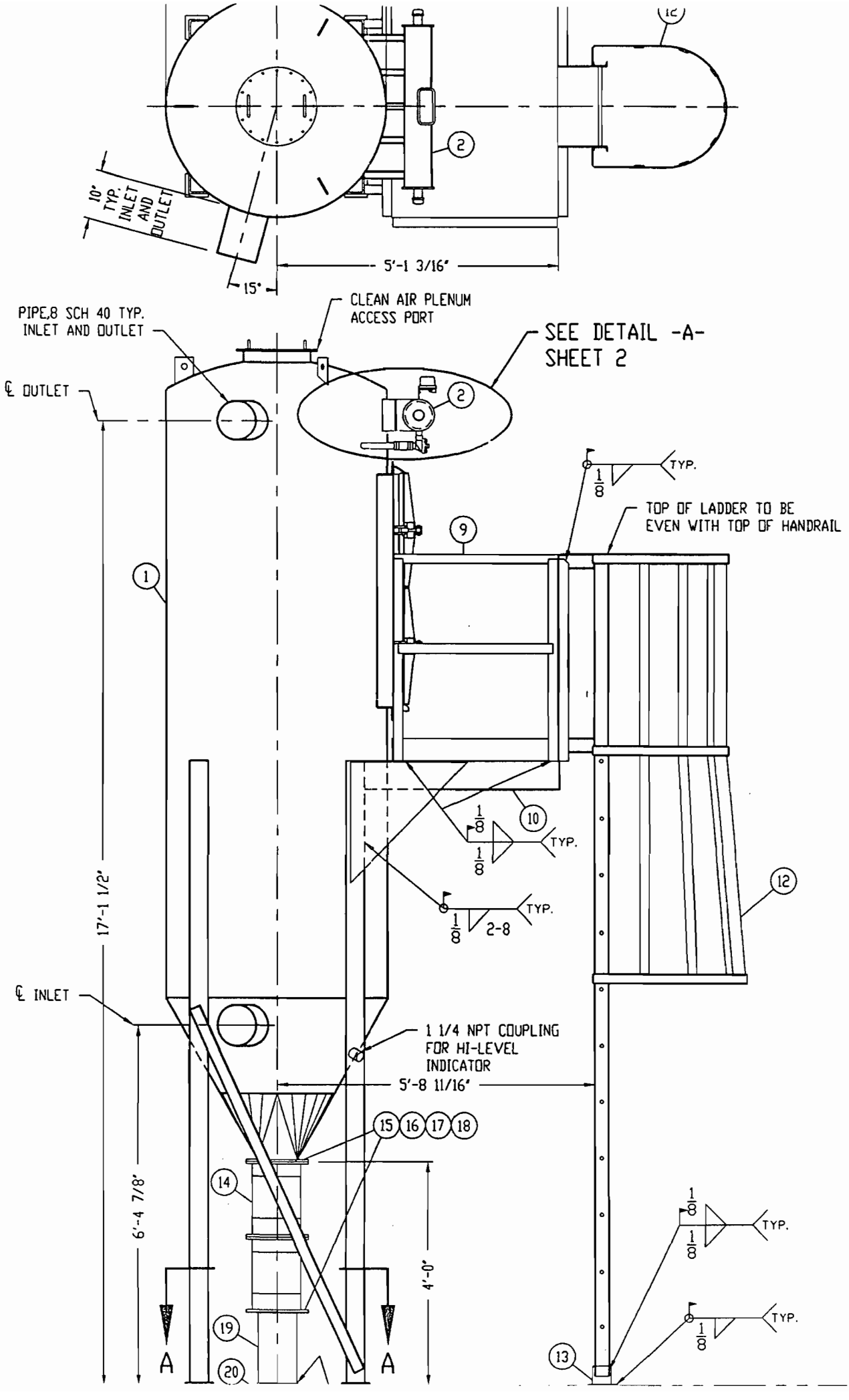
10" TYP. INLET AND OUTLET
15"
5'-1 3/16"
PIPE,8 SCH 40 TYP. INLET AND OUTLET
CLEAN AIR PLENUM ACCESS PORT
SEE DETAIL -A- SHEET 2
℄ OUTLET
TOP OF LADDER TO BE EVEN WITH TOP OF HANDRAIL
TYP.
2-8
17'-1 1/2"
℄ INLET
1 1/4 NPT COUPLING FOR HI-LEVEL INDICATOR
5'-8 11/16"
6'-4 7/8"
4'-0"
A
A

ATTACHMENT 3

SUMMARY OF AIR MODELING FOR REVISED BAGHOUSE STACK

ISC2 MODELING SUMMARY
KILN 5 STACK DIMENSION REVISION
(6/11/93)

ISC2 MODEL INPUTS

Source	Emissions (g/s)	Location X (m)	Location Y (m)	Stack Parameters H (m)	T (K)	V (m/s)	D (m)
Orig. 5	10	427400	3326600	19.81	489	20.42	1.52
Rev. 5	10	427400	3326600	21.95	489	27.08	1.32

ISC2 MODELING RESULTS

1986 JAX data

Source	Maximum Predicted Impacts (ug/m3) 8-HOUR	24-HOUR	ANNUAL
Orig. 5	22.23	11.69	0.66
Rev. 5	21.17	10.71	0.63
% Reduction	5	8	5

KOOGLER & ASSOCIATES

ATTACHMENT 4

DESCRIPTION OF OPERATION AND MAINTENANCE OF LBM AND BAGHOUSE SYSTEMS

Section D

Process Information

This section provides information about the processes of storing waste fuel in tanks, Section D-2, and burning liquid waste fuels in lightweight aggregate kilns, Section D-5, as carried out at the Florida Solite facility. Florida Solite does not manage hazardous waste in waste piles, surface impoundments, incinerators, landfills or other land treatment units.

Also as required by regulations at 40 CFR Parts 266 and 270, Florida Solite is submitting a plan for trial burns in its rotary kilns to demonstrate compliance with stack emissions limitations under which it will operate. The Trial Burn Plan, prepared for Florida Solite by Four Nines, Inc., is included as a free-standing document, Exhibit D-1. A Quality Assurance/Quality Control Plan, prepared by IEA, Inc. is included as an attachment to the Trial Burn Plan.

D-1 Container Storage

Solite does not accept hazardous waste in containers from off-site for management. Therefore, this section is not applicable.

D-2 Tank Storage

D-2a Tank Design and Auxiliary Equipment

The construction of six 20,000 tanks is planned to provide storage for hazardous waste fuel delivered to the Florida Solite facility. The tanks will be 31 feet in height with a diameter of 10 feet 6 inches. Shell thickness will be certified at time of installation by an independent registered Professional Engineer. The shells, bottom and top of the tanks will be constructed of ASTM A-36 carbon steel (.33% carbon) with a tensile strength of 58,000 to 80,000 psi. The tanks will be constructed in accordance with the American Petroleum Institute's (API) standards. The tanks are to have flat bottoms and be built as per the design depicted in Figure 1.

Other features of the tanks will be 18 inch manholes, vents with vapor recovery, a liquid level monitoring system and numerous inlets and outlets. Tanks will have mixers powered by explosion proof electric motors.

D-2a Tank Design and Auxiliary Equipment (continued)

Tank process flow and piping diagrams will be as shown in Figure 2. There will be no need for pressure controls; tanks will operate at ambient temperature and pressure. No pressure other than pumping flow pressure will be present in the system. Explosion proof electric pumps will be utilized to transfer the waste fuel from the tanks to the rotary kilns. Mechanical mixers and recirculation pumps will be utilized in the storage tanks.

Both the pumps which are to be utilized for off-loading tanker trucks and railcars as well as storage tanks and associated equipment will be located within secondary containment. They will be elevated on sealed concrete pads with walls at a height sufficient to contain 110% of the volume of the largest storage tank and the precipitation equivalent to a 25-year, 24-hour rainfall event per 40 CFR §265.193. Design specifications for secondary containment are given in Figure 3.

D-2b Tank Corrosion and Erosion

Corrosive material will not be stored in the steel tanks at this facility; however, to ensure that there is no corrosion or erosion of the steel tanks, an electronic thickness meter will be utilized to check the thickness of the tank walls once per year. This method has been chosen for testing tank shell thickness because accurate readings can be obtained from the exterior surface therefore eliminating the need to enter the tanks for inspection.

The tanks will be constructed of A-36 carbon steel which is appropriate for storage of the materials anticipated to be stored. The need for interior linings or coatings is not necessary since the stored material will not be corrosive. The tanks are designed and will be constructed in accordance with the American Petroleum Institute's requirements for fuel storage tanks and each tank will be certified to that effect. The design parameters for API tanks are contained in Exhibit D-2.

The fitness of API tanks is based on the stress exerted on the tank shell from the stored material. A tank shell thickness equation is utilized to determine the minimum shell thickness for the size of the tank and the material it will store. Also, corrosion and erosion allowances are factored into the calculations to determine the minimum allowable shell thickness. Any shell thickness below this

D-2b Tank Corrosion and Erosion (continued)

level is considered unsafe and the tank should be removed from service and replaced or repaired. The shell thickness equation for these tanks that determined the specification 0.125 inches is given in Figure 4.

D-2c Tank Management Practices

All tanks, lines and pumps will be inspected daily for possible leaks or malfunctions as outlined in the inspection program found in Section F of this document. Before a truck or rail load is pumped to a storage tank(s), it is tested and accepted as outlined in Section C-1 of this document for incompatible wastes.

Each tank will be equipped with a level indicator which will be visually checked prior to introducing the waste into the tank to prevent overfilling of the tank. A manually operated inlet valve for each tank would control the flow of waste and also prevent the tank from overfilling. A check valve will be provided to prevent the contents of the tank from flowing back to the tanker.

D-2d Requirements for Ignitable or Reactive Wastes

Most of the waste stored at Florida Solite are classified by the National Fire Protection Association as NFPA-30, "Flammable Liquid, Class IC." The buffer zone required by NFPA-30 for these types of liquids is contained in Figures 5, Table 2-1 of NFPA-30.

The appropriate section of Table 2-1 for Florida Solite's storage tanks is the section titled "Vertical With Weak Roof to Shell Seam" and subsection "Protection from Exposures." The location of these tanks, based upon NFPA-30 Table 2-1, meets the buffer zone requirements for tank distances to the property line.

D-5 Rotary Kilns

At this facility, clay, shale, slate and other materials quarried and obtained on-site and off-site are burned in a rotary kilns fired with hazardous waste fuels and other fuels to produce a lightweight aggregate. The production of lightweight aggregate consists of mining clay or other raw materials, and applying processes such as pugging, blending, extruding, crushing and sizing the material, feeding and heating it in a rotary kiln. During the process, and at a temperature above 1800°F, gas is released as a result of the heating and creates

D-5 Rotary Kilns (continued)

millions of tiny cells within the plastic mass, expanding it and giving the material its lightweight property. The combustion gases leaving the kiln pass through a system including a fabric filter baghouse controlling the emission of particulate matter to the atmosphere.

Florida Solite has utilized industrial wastes for firing its three rotary kilns since the early 1970's as an economical substitute for virgin fuels and a practical reuse of a valuable resource. Florida Solite is now able to control the blending and burning of waste fuels well enough to eliminate the need for conventional fuels for most of its operations. Since promulgation of the BIF regulations (40 CFR Part 266) additional requirements have been placed on this process. Therefore, this application for permit is being made in order to continue operation and fully comply with BIF regulations.

D-5a Justification for Exemption

Florida Solite is not requesting an exemption.

D-5b Trial Burn

Plans for trial burns at Florida Solite were prepared by Four Nines, Inc. and are submitted with this document as Exhibit D-1. Complete descriptions of the kilns can be found in this exhibit.

D-5c Data in Lieu of Trial Burn

No request is being made at this time to submit any data in lieu of trial burn. However, compliance testing data is planned. If the availability of such data is timely, Florida Solite reserves the right to submit data in lieu of trial burn at a later time.

D-5d Monitoring

D-5d(1) Temperature Monitors and Controls

Infrared pyrometers will be used to monitor kiln combustion zone temperatures. The output signal of this pyrometer is recorded by the Programmable Logic Controller (PLC) and triggers automatic waste feed cut-off.

D-5d(1) Temperature Monitors and Controls (continued)

Radiation pyrometers have been used successfully for several years to control firing rates in Florida Solite kilns and will continue to be utilized. This pyrometer provides a calibrated analog signal which corresponds directly to temperatures within the kiln. The output signal from this pyrometer is converted to an actual temperature readout displayed in the control room. A pyrometer signal processor and proportional control valve will adjust the flow of fuel to the kiln.

Combustion gas temperatures lower than limits determined during the trial burn will trigger an automatic waste-feed cut-off and either a switch-over to auxiliary fuel or a kiln shut-down. Restart of waste-feed to the kiln will be manually initiated by the kiln operator when operating parameters return to within permitted limits.

Exhibit D-4 contains manufacturer's literature describing the infrared pyrometer. The system described herein or its equivalent will be utilized on each of the kilns.

D-5d(2) Feed Stream Monitoring

Hazardous waste fuel flow will be measured continuously. A flow meter will be installed in the hazardous waste fuel line for each kiln.

When hazardous waste is being fired, a flow transmitter associated with each flow meter will send a signal to the system PLC. The PLC will record the signal and compare it to fuel flow limits established during the trial burn. If the PLC determines that the fuel flow rate reaches the prescribed limit then it will activate the automatic waste feed shut-off system.

Additionally, each raw material feed stream will be monitored. Kilns 1, 1A, and 5 will each be equipped with a belt scale system that provides a 4-20 milliamp signal to the PLC. The PLC will compute the raw material feed rate (tons/hr) and record it. Also, the PLC

D-5d(2) Feed Stream Monitoring (continued)

will compare the values to raw feed limits determined during the trial burn. If the PLC determines that the feed rate has met or exceeded the prescribed limit, it will activate the automatic waste feed shut-off system.

D-5d(3) Indicators of Combustion Gas Velocity and Controls

All Florida Solite kilns are equipped with induced draft (I.D.) fans. Florida Solite proposes installing pressure transmitters integral to the I.D. fan ductwork which would detect a loss of induced draft and trigger an automatic waste-feed cut-off.

Total gas flow through the kilns is controlled by the I.D. fans. All of the Florida Solite kilns will use baghouses with integral I.D. fans for particulate control. The I.D. fans are operated at near constant speed at normal operation temperatures (about 400°F). Figure 6 presents the fan curve for the I.D. fans for kiln Nos. 1 and 1A. I.D. fan performance will be monitored by continuous measurement of amps. The signal will be recorded by the PLC and operating conditions outside limits determined during the trial burn will activate the automatic waste feed shut-off system.

Primary air is supplied to the burners utilizing direct drive blowers and fans. Blowers are powered by 50-horsepower induction motors and are operated at a near constant speed delivering 6650 cfm air. Additional air may be provided by existing coal mill fans.

All kiln exhaust gases will pass through a baghouse when waste fuel is being burned. Each baghouse is designed to control PM to less than 0.08 g/dscfm. Table 1 presents design data for the baghouses. At present, Florida Solite intends to construct a single baghouse for kiln 5. Kilns No. 1 and 1A will share a common baghouse. The system is designed to ensure that only one kiln is exhausted to any one baghouse at any particular time. Should production demands warrant operating all three kilns simultaneously, Florida Solite will install a dedicated APC System on each kiln.

D-5d(3) Indicators of Combustion Gas Velocity and Controls (continued)

TABLE 1
Baghouse Design Data for Kiln Nos. 1 and 1A

Air Volume:	52,000 ACFM
Mass Loading:	6,000 lbs/hr.
Cloth Area:	5,831 sq. ft./compartment
Number of Compartments:	5
Gross Air-To-Cloth Ratio:	1.78 to 1
Net Air-To-Cloth Ratio: (While one compartment cleaning)	2.23 to 1
Operating Temperature:	≤450°F Baghouse Inlet
Dust:	Clay Dust

Design data for kiln No. 5 will be determined at a later date. Design criteria will be submitted to the agency when available and prior to construction.

The PLC system will continuously monitor baghouse inlet temperature and pressure drop across the unit. Pressure and temperature sensors will provide continuous signals to the PLC. In the event that baghouse inlet temperatures reach 450°F or the pressure drop is measured outside the range established during the trial burn, the PLC will activate the automatic waste feed shut-off system.

D-5d(4) CEM System

Stack gases from the kilns will be monitored downstream of the baghouses at the final point before release to the atmosphere. This is done by a Continuous Emissions Monitoring System (CEMS).

The CEMS continuously extracts a sample from the stack which is transported through tubing by a double head vacuum pump. At the pump discharge, the sample is filtered. It is then dried by cooling to a dew point of 41°F to prepare it for dry basis analysis. Carbon monoxide content is measured continuously by infrared analysis (Rosemont Analytical Model 880 Infrared analyzer or equivalent). Oxygen content is measured continuously by paramagnetic analysis

D-5d(4) CEM System (continued)

(Rosemont Analytical Model 755R Paramagnetic Oxygen Analyzer or equivalent). Exhibit D-5 provides a description and specifications of the analyzers. The sample is vented to atmosphere after analysis. The PLC calculates the CO emissions based on a one hour rolling average of carbon monoxide corrected to 7% oxygen. The results are recorded to provide a historical record. Should the one hour rolling average CO concentration reach or exceed 100 ppmv, the automatic waste feed cut-off system will be activated by the PLC.

At present Florida Solite believes that all three kilns can operate at CO emissions well below the one-hour rolling average concentration of 100 ppmv, however, a hydrocarbon analyzer can be added to the CEMS if necessary. The PLC will automatically check the calibration drift (CD) of the system. The source of the flow into the analyzer is switched from the sample probe to a calibration gas cylinder. There are three calibration gases for the carbon monoxide analyzer: high span, low span, and zero gas. There are two calibration gases for the oxygen analyzer: a span and a zero gas. Each is introduced to the particular analyzer in turn. The PLC will adjust the zero in its memory to conform with the zero indicated by the calibration check. If the CD is out of the BIF specifications, the PLC will display an alarm message indicating that one or both analyzers need to be manually calibrated.

D-5e Automatic Waste Feed Shut-Off

Each kiln, Nos. 1, 1A and 5, will be provided with an automatic waste feed shut-off (AWFSO) prior to certification of compliance testing. Two fail-closed actuated valves will be installed in the hazardous waste feed line of each kiln. They will be installed in series to provide redundant shut-off capability. These valves are automatically closed by the PLC when it senses or calculates that a critical operating parameter is at or beyond a prescribed limit as proposed in Table 2.

The AWFSO for each kiln is controlled by two PLCs, primary and on-line, thereby providing a back-up device. The PLC receives information from remote sensors via Input/Output panels and continuously monitors the system. When the PLC determines that an operating condition has met or exceeded a limit as noted in Table 2, it will automatically shut-off the waste fuel and signal the operator that the

ATTACHMENT 5

DESCRIPTION OF AUTOMATIC LBM CUT-OFF SYSTEM

3.0 Engineering Description

3.1 General

The Florida Solite Company's production area is made up of three individual kiln systems, Nos. 1, 1A, and 5. Each of the kiln systems consists of a waste feed system, counter-current rotary kiln furnace, kiln exit gas quench system, fabric filter (baghouse) air pollution control device, prime mover (I.D.) fan and exhaust stack. Also included are the operational controls, process and emission monitors and safety interlocks, as described in Section 4.0. The kiln systems are used in the manufacture of ***Solite***®, a lightweight aggregate product used to produce lightweight masonary units and lightweight concrete and for other uses. Kiln Nos. 1 and 1A will share a common air pollution control (APC) system. Only one of the two kilns will operate at any given time. No. 5 kiln will have a separate APC system. Kiln No. 1A will alternately be served by No. 5 baghouse. The equipment arrangement for the Florida Solite facility is shown on Figures 3-1 and 3-2. The following sub-sections provide the engineering and technical details of the major components for the kiln systems.

3.2 Feeding Systems

3.2.1 Waste Feed System

The point of waste feed to the kiln and system components are schematically shown on Figure 3-1. Hazardous wastes are injected and atomized through a single burner nozzle. The kiln burner system is capable of firing various fossil fuels including coal, natural gas and fuel oils but normally operates on hazardous waste, as described in Section 2.0.

The waste, which is pumped to each kiln from Solite tanks or the Oldover waste storage facility or directly from a tanker or railcar, is delivered to the burner injector through a feed line which has been modified to comply with the BIF regulations. As shown on Figure 3-1, two fail-closed solenoid valves (MOV) are in place to provide redundant shut-off capability in the event of unsuitable conditions in the kiln for burning of waste. These valves are controlled by the Automatic Waste Feed Shut-off (AWFSO) in the programmable logic controller (PLC) (see Section 4 for list of AWFSOs). The controls and interlocks are operated in accordance with the BIF compliance limits for carbon monoxide (CO) emissions, waste feed rate, combustion gas flow (stack), kiln pressure, combustion zone temperature, and baghouse inlet temp.

3.2.1 Waste Feed System (continued)

A flow control valve (FCV) has been installed in the waste feed line as a means of providing accurate control of the feed rate to maintain kiln temperatures. A flowmeter (FE) has been installed on the waste feed line. The output from the flowmeter is monitored and recorded to provide a historical record of waste input to the kiln. This complies with the BIF regulations concerning metals feed rate and emissions.

Before feeding waste, the kiln is brought up to operating temperature by burning #2 fuel oil, coal, natural gas or other unregulated fuel in the kiln burner. When the kiln reaches approximately 1800°F, the process is stabilized and all other permissives are satisfied, the waste feed solenoid valves open. In addition to the control permissives, a manual valve (HV) on the waste feed line (downstream of the solenoids) must be opened, by the operator, before waste flows to the injector. This is provided for additional operational safety. Waste is gradually increased as auxiliary fuel is reduced. Kiln temperature control maintains the required flow rate.

3.2.2 Raw Feed System

The raw feedstock, which includes material generally excavated from Florida Solite's quarry, is fed into each kiln on a continuous basis. The raw feed, other than dust or additives, is stored in stockpiles and conveyed to the kiln processing area.

The feedstock is introduced, via a chute arrangement, at the "cold" end of the kiln, opposite the burner. The raw material tumbles through the kiln towards the lower, "hot" end. The lightweight aggregate product is discharged onto a stockpile for cooling before finishing and for storage. At times, admixtures are introduced at the "hot" end of the kilns to coat the surface of the hot aggregate to prevent sticking.

The No. 1 and 1A kilns at Florida Solite Company have an estimated maximum production rate of 10 tons per hour of lightweight aggregate (raw feed input). The No. 5 kiln maximum production rate is estimated at 14 tons per hour. A weigh-belt system constantly monitors and records the quantity of raw feedstock processed. The raw material is routinely sampled and analyzed by Florida Solite for BIF metals, chlorine, ash and organics.

4.3 Flue Gas Monitors (continued)

one hour rolling average of carbon monoxide corrected to 7% oxygen. The results are continuously recorded to provide a historical record.

Provisions have been made in the CEMs for the addition of a hydrocarbon analyzer if necessary. The sample tubing from the stack to the panels, the filter and the vacuum pump can be electrically heated to 150°C to prevent moisture from condensing and thereby decreasing the hydrocarbon concentration of the sample.

TABLE 4-2
Flue Gas Monitors

ITEM	DESCRIPTION	FUNCTION
1	OXYGEN ANALYZER	Monitors flue gas oxygen in the stack. Paramagnetic type, Rosemont Analytical Model 755R. Range 0-25%.
2	CARBON MONOXIDE ANALYZER	Monitors flue gas carbon monoxide (CO) in the stack. Analyzer is a Rosemont Analytical Model 880 infrared type calibrated with zero and span gases. In addition, a programmable logic controller (PLC) corrects the analyzer output of CO emissions to 7% oxygen and a 60 minute rolling average is calculated and recorded. The analytical ranges are 0-200 ppm and 0-3000 ppm.

The PLC will automatically check the calibration drift (CD) of the system. The source of the flow into the analyzers is switched from the sample probe to a calibration gas cylinder. There are three calibration gases for the carbon monoxide analyzer: high span, low span and a zero gas. There are two calibration gases for the oxygen analyzer: a span and a zero gas. Each is introduced to the particular analyzer in turn. The PLC will adjust the zero in its memory to conform with the zero indicated by the calibration check. If the CD is out of the BIF specifications, the PLC will display an alarm message indicating that one or both analyzers need to be manually calibrated.

4.4 Automatic Waste Feed Shut-off (AWFSO) System

Instrumentation on the kiln is available to monitor process conditions, provide data for assuring compliance with regulatory requirements and assure proper process response and control. Operational flexibility, safety interlocks and automatic shutdown for unsafe

conditions are also incorporated. The automatic waste feed shutdown conditions and emergency shutdowns are identified in Table 4-3; specific values will be developed from the trial burn or during compliance tests. Signals from the process monitors are relayed to the proper shutdown device when process limits are exceeded.

Table 4-3
Kiln Automatic Waste Feed Shut-off (AWFSO)

Hazardous liquid wastes will shut off under the following conditions:

1. Hazardous waste fuel feed rate, _____*_____ gph
2. Aggregate feedstock feed rate, _____*_____ tph
3. Low combustion zone temperature, _____*_____ °F
4. Kiln exit draft _____*_____ inches w.c. (>15 sec)
5. High baghouse inlet temperature, _____*_____ °F
6. High baghouse pressure differential, _____*_____ inches w.c. (>15 sec)
7. Stack gas CO concentration, >100 ppm, 60 min rolling avg. corrected to 7% O_2 d.v.
8. Stack gas flow rate, _____*_____ ID fan amps

* Actual value to be confirmed at compliance test and/or trial burn

Emergency Shutdowns

1. Power failure
2. ID fan failure

A demonstration of the AWFSO shall be provided prior to the trial burn to representatives of the EPA and the State of Florida. For this test, a signal will be sent to the controller to simulate the condition. The reaction of the controller and valves will be noted. To the extent possible, the demonstration will not interfere with operations and will not impose adverse environmental results, such as a CO spike, should waste feed stop abruptly due to a high-temperature shut-off. The shut-offs will be simulated.

D-5d(4) CEM System (continued)

(Rosemont Analytical Model 755R Paramagnetic Oxygen Analyzer or equivalent). Exhibit D-5 provides a description and specifications of the analyzers. The sample is vented to atmosphere after analysis. The PLC calculates the CO emissions based on a one hour rolling average of carbon monoxide corrected to 7% oxygen. The results are recorded to provide a historical record. Should the one hour rolling average CO concentration reach or exceed 100 ppmv, the automatic waste feed cut-off system will be activated by the PLC.

At present Florida Solite believes that all three kilns can operate at CO emissions well below the one-hour rolling average concentration of 100 ppmv, however, a hydrocarbon analyzer can be added to the CEMS if necessary. The PLC will automatically check the calibration drift (CD) of the system. The source of the flow into the analyzer is switched from the sample probe to a calibration gas cylinder. There are three calibration gases for the carbon monoxide analyzer: high span, low span, and zero gas. There are two calibration gases for the oxygen analyzer: a span and a zero gas. Each is introduced to the particular analyzer in turn. The PLC will adjust the zero in its memory to conform with the zero indicated by the calibration check. If the CD is out of the BIF specifications, the PLC will display an alarm message indicating that one or both analyzers need to be manually calibrated.

D-5e Automatic Waste Feed Shut-Off

Each kiln, Nos. 1, 1A and 5, will be provided with an automatic waste feed shut-off (AWFSO) prior to certification of compliance testing. Two fail-closed actuated valves will be installed in the hazardous waste feed line of each kiln. They will be installed in series to provide redundant shut-off capability. These valves are automatically closed by the PLC when it senses or calculates that a critical operating parameter is at or beyond a prescribed limit as proposed in Table 2.

The AWFSO for each kiln is controlled by two PLCs, primary and on-line, thereby providing a back-up device. The PLC receives information from remote sensors via Input/Output panels and continuously monitors the system. When the PLC determines that an operating condition has met or exceeded a limit as noted in Table 2, it will automatically shut-off the waste fuel and signal the operator that the

hazardous waste fuel has been shut-off. Additionally, all automatic shut-offs will be logged via the PLC to the plant's data acquisition system. Upon automatic shut-off of hazardous waste fuel, the operator manually will switch to conventional fuel. The PLC will continue to monitor the parameters proposed in Table 2. The PLC has been programmed with interlocks to prevent the hazardous waste fuel valves from opening until all operating parameters listed in Table 2 are within prescribed limits. Once all parameters are within prescribed limits the PLC will allow the operator to switch from conventional to hazardous waste fuel.

TABLE 2
Proposed Waste-Feed Cutoff Limits

Parameter	Limit
Minimum Combustion zone temperature	To Be Determined [1]
CO stack concentration, or alternatively	100 ppmv at 7% O_2
hydrocarbon stack concentration	20 ppm at 7% O_2
Combustion gas velocity	To Be Determined [1]
Baghouse Pressure drop	To Be Determined [1]
Maximum Raw Feed Rate	To Be Determined [1]
Maximum Fuel Flow Rate	To Be Determined [1]
Maximum Baghouse Inlet Temperature	450°F

[1] To be determined during Certification of Compliance Test and/or Trial Burn.
[2] In the event that 40 CFR §266.104(e) is deleted and/or modified, Florida Solite reserves the right to operate above 450°F.

ATTACHMENT 6

BELT SCALE INFORMATION

SYSTEM DATA SHEET

RAMSEY
TECHNOLOGY INC.

MODEL 10-20-1 /MODEL 10-301
BELT SCALE SYSTEM

CUSTOMER: KNIGHT INDUSTRIAL EQUIPMENT
END USER: FLORIDA SOLITE
P.O. NO.: 4277
FILE NO.: 55601

-CONVEYOR DATA-

CONVEYOR NO.: 5
EQUIP. TAG NO.:
PRODUCT: CLAY
CAPACITY: 30.0 STPH
BELT SPEED: 124 FPM
SPEED PULLEY DIA.: 18 IN
BELT WIDTH: 30 IN.
IDLER SPACING: 48 IN.
IDLER TROUGH ANGLE: 35 DEG.

--SCALE DATA--

WEIGH SPAN: 4 FT.
TARE LOAD: 50.00 LBS
NET LOAD: 24.18 LBS
GROSS LOAD: 74.18 LBS
LOAD CELL SIZE: (1) 100 LBS.
BELT LOADING: 8.060001 LBS/FT

INSTRUMENT DATA

INTEGRATOR: MODEL 10-301
SPEED SENSOR: MODEL 60-12C
PULSE OUTPUT = .1 STONS
CURRENT OUTPUT = 4-20 ma

INTEGRATOR S/N_____
LOAD CELL S/N_____

CALIBRATION DATA

LOAD CELL RESISTANCE_____OHMS
R-CAL RESISTOR VALUE_____OHMS
R-CAL EQUIV. LBS_____

ATTACHMENT 7

INFORMATION ON STORAGE AND HANDLING SYSTEM
FOR CLAY/LIME FINES

CLAY FINES SYSTEM

The filter elements in the receiver are cleaned by jets of compressed air. Five (5) solenoids (ZY121-ZY125) are used to control the air pulses which clean the elements.

A 5" O.D. carbon steel tubing system takes the air from the vacuum receiver to an inline filter (F112). This piping system uses compression couplings for straight sections and for elbows. The cautions expressed above regarding installation of compression coupled piping systems apply to this piping as well.

The primary purpose of the inline filter is to protect vacuum blower B101. Should rock dust carry over past the vacuum receiver this filter collects the material before it damages the vacuum blower. Carry over can result from either a leak in a filter element or an improperly installed element.

The vacuum blower is a 40 HP positive displacement blower package. Included in the package is a motor, positive displacement blower, silencers, a relief valve, two (2) vacuum switches, and a vacuum gauge. This unit is designed to handle 770 ICFM at a vacuum of 9.5 in. Hg.

System Operations:

The system conveying rock dust to the dust silo (T201) is designed to operate continuously while either of the two dust sources is in service. The idle status of the various system elements is described below:

Valves V111 & V112 .....Closed
Airlocks H101 & H102 .....Off
Manual Gates V101 & V102 .....Open
Solenoids ZY121-ZY125 .....De-energized
Dump Valve V131 (both gates) .....Closed
Vacuum Blower B101 .....Off

Setpoints for the system vacuum switches are:

Switch ID	Pre-Startup	Setpoint (*)
PSH101	12 in. Hg	12 in. Hg
PSL101	4 in. Hg	Empty line vacuum plus 1 in. Hg
PSL112	6 in. Hg	Empty line vacuum plus 2 in. Hg

(*) Setpoints require field adjustment after test runs with and without conveying material. Care should be taken during test runs to monitor system conditions closely to avoid plugging.

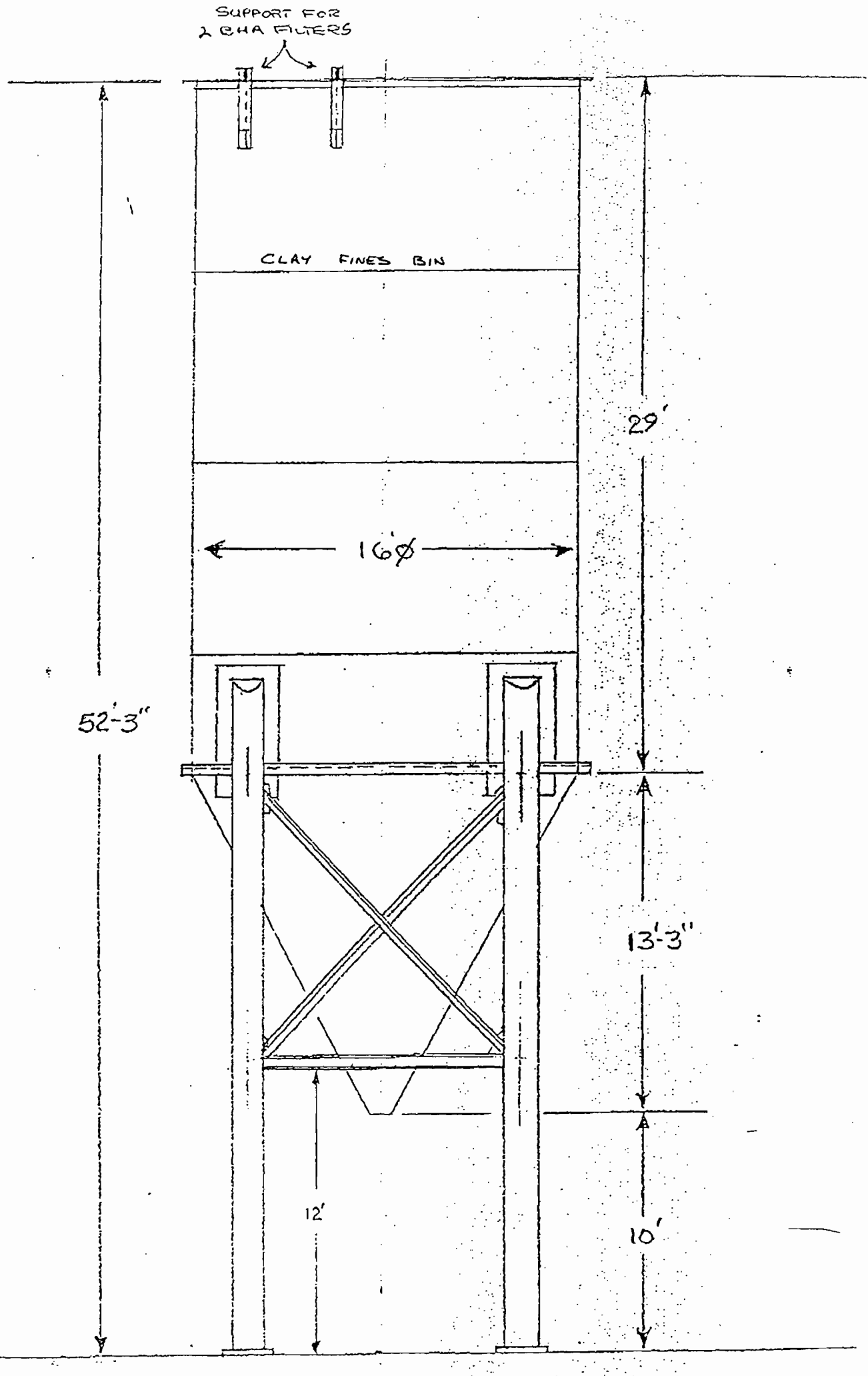
SUPPORT FOR
2 BHA FILTERS
CLAY FINES BIN
29'
16'Ø
52'-3"
13'-3"
12'
10'

CLAY FINES BIN

H. Emission Stack Geometry and Flow Characteristics (Provide data for each stack):

Stack Height: 52 ft. Stack Diameter: 0.5 ft.

Gas Flow Rate: 900 ACFM 800 DSCFM Gas Exit Temperature: 100 °F.

Water Vapor Content: 5 % Velocity: 76 FPS

SECTION IV: INCINERATOR INFORMATION

NOT APPLICABLE

Type of Waste	Type 0 (Plastics)	Type I (Rubbish)	Type II (Refuse)	Type III (Garbage)	Type IV (Pathological)	Type V (Liq.& Gas By-prod.)	Type VI (Solid By-prod.)
Actual lb/hr Incinerated							
Uncontrolled (lbs/hr)							

Description of Waste _____

Total Weight Incinerated (lbs/hr) _____ Design Capacity (lbs/hr) _____

Approximate Number of Hours of Operation per day _____ day/wk _____ wks/yr. _____

Manufacturer _____

Date Constructed _____ Model No. _____

	Volume $(ft)^3$	Heat Release (BTU/hr)	Fuel		Temperature (°F)
			Type	BTU/hr	
Primary Chamber					
Secondary Chamber					

Stack Height: _____ ft. Stack Diamter: _____ Stack Temp. _____

Gas Flow Rate: _____ ACFM _____ DSCFM* Velocity: _____ FPS

*If 50 or more tons per day design capacity, submit the emissions rate in grains per standard cubic foot dry gas corrected to 50% excess air.

Type of pollution control device: [ ] Cyclone [ ] Wet Scrubber [ ] Afterburner

[ ] Other (specify) _____

9/93

4. Control Device Details

See Attachment 2.

5. Baghouse Control Efficiency for Particulate Matter

Inlet	=	490 lbs/hr
Outlet	=	11.8 lbs/hr
Required Efficiency	=	(490 - 11.8) x 100/490 = 97.6%
Expected Efficiency	=	99%

III. CLAY FINES BIN

1. Process Rates

Process (Transfer) Rate = 5000 lbs/hr

2/3. Uncontrolled and Actual Emissions

A. Uncontrolled Particulate Matter Emissions

Based on 0.27 lb/ton of material (pneumatic cement transfer operation factor, AP-42, Section 8-10).

PM = 0.27 lb/ton x 5000 lbs/hr x ton/2000 lbs

= 0.68 lb/hr

x 8760 hrs/yr x ton/2000 lbs

= 3.0 tons/yr

B. Actual Particulate Matter Emissions

Based on 0.02 gr/dscf exit gas loading.

PM = 0.02 gr/dscf x 800 scf/min x lb/7000 gr x 60 min/hr

= 0.14 lb/hr

x 8760 hrs/yr x ton/2000 lbs

= 0.6 ton/yr

Revised 9/93

4. Control Device Details

Model: 9-DS-8 Blow through type (2 units)

Cloth Area: 186 sq. ft.

Air/Cloth: 4.3 to 1

Filter Media: Polyester

5. Control Efficiency

Inlet = 0.68 lb/hr

Outlet = 0.14 lb/hr

Required Efficiency = (0.68 - 0.14) x 100/0.68 = 79%

Expected Efficiency = 99%

IV. **LIME SYSTEM** (already permitted under AC10-197099)

1. Process Rates

Process (Transfer) Rate = 40,000 lbs/hr (truck unloading)

2/3. Uncontrolled and Actual Emissions

A. Uncontrolled Particulate Matter Emissions

Based on 0.27 lb/ton of material (pneumatic cement transfer operation factor, AP-42, Section 8-10).

PM = 0.27 lb/ton x 40,000 lbs/hr x ton/2000 lbs

= 5.4 lbs/hr

x 8760 hrs/yr x ton/2000 lbs

= 23.7 tons/yr

Revised 9/93

CLAY FINES TRANSFER SYSTEM
(To Pug Mill and Clinker Hopper)

The pneumatic conveying system consists of an airlock surge hopper (T202), a vent filter for the surge hopper (F201), a high level switch (LSH202), airlock H301, a pickup pan adapter, and a hose switch station, all located at the storage silo. At each remote location is two filter receivers (F311 and F411), a level switch (LSH311 and LSH411), a manual maintenance gate (V311 and V411) on the receiver discharge, and an airlock (H311 and H411). The capacity of airlock H301 should be 9,000 pounds per hour of rock dust at 86-88 pounds per cubic foot. Airlocks H311 and H411 should be set to deliver 9,000 pound per hour of rock dust at 86-88 pounds per cubic foot.

This pneumatic system operates under pressure, air is first drawn into blower package B301. Pressure blower B301 is a 50 HP positive displacement blower package. Included in the package are motor, positive displacement blower, inlet filter, silencers relief valve, two (2) pressure switches, a pressure gauge, and a check valve. The unit is designed to handle 525 SCFM at a pressure of 7.5 PSIG. Conveying air is drawn through the inlet filter by the positive displacement blower. This air "carries" the rock dust while it is inside the piping system. It is important that the inlet filter is not plugged or the inlet restricted. A procedure to check and clean this filter regularly is recommended.

Piping between blower B301 and the pickup pan adapter on airlock H301 is 4" O.D. carbon steel tubing and elbows, all connected with compression couplings. The piping system which transfers the rock dust to either receiver is made up of 4" Schedule 80 carbon steel pipe, 4" I.D. Basalt lined elbows with companion flanges, and compression couplings for connecting the straight sections of pipe. A transition is required between the blower and the pickup pan to adjust from tubing to pipe diameter. Previously expressed concerns about pipe coupling and alignment apply to these systems as well.

The hose station allows an operator to choose which use point will receive rock dust, either the pug mill or the clinker hopper. Limit switches are provided on the upstream and downstream hose connections. ZSL201 is the upstream hose limit switch. The limit switch to proof connection to the pug mill is ZSL301, and the limit switch to the clinker hopper is ZSL401.

The filter elements in receivers F311 and F411 are cleaned by jets of compressed air. Timer boards (KT311 and KT411 are provided with each filter to control the cleaning of the filter elements. BHA will provide the settings for these boards.

PUG MILL FILTER RECEIVER

SECTION III: AIR POLLUTION SOURCES & CONTROL DEVICES (Other than Incinerators)

A. Raw Materials and Chemicals Used in your Process, if applicable:

Description	Contaminants		Utilization Rate - lbs/hr	Relate to Flow Diagram
	Type	% Wt		
Clay fines	Part. Matter	2	9,000	

B. Process Rate, if applicable: (See Section V, Item 1)

1. Total Process Input Rate (lbs/hr): 9,000

2. Product Weight (lbs/hr): 9,000

C. Airborne Contaminants Emitted: (Information in this table must be submitted for each emission point, use additional sheets as necessary)

Name of Contaminant	Emission[1]		Allowed[2] Emission Rate per Rule 17-2	Allowable[3] Emission lbs/hr	Potential[4] Emission		Relate to Flow Diagram
	Maximum lbs/hr	Actual T/yr			lbs/yr	T/yr	
Part. Matter	0.1	0.4	--	0.1	1.2	5.3	

[1]See Section V, Item 2.

[2]Reference applicable emission standards and units (e.g. Rule 17-2.600(5)(b)2. Table II, E. (1) - 0.1 pounds per million BTU heat input)

[3]Calculated from operating rate and applicable standard.

[4]Emission, if source operated without control (See Section V, Item 3).

PUG MILL FILTER RECEIVER

D. Control Devices: (See Section V, Item 4)

Name and Type (Model & Serial No.)	Contaminant	Efficiency	Range of Particles Size Collected (in microns) (If applicable)	Basis for Efficiency (Section V Item 5)
Pulse jet type baghouse	PM	99	2	Est.
BHA R-04-16-100				

E. Fuels NA

Type (Be Specific)	Consumption*		Maximum Heat Input (MMBTU/hr)
	avg/hr	max./hr	

*Units: Natural Gas--MMCF/hr; Fuel Oils--gallons/hr; Coal, wood, refuse, other--lbs/hr.

Fuel Analysis:

Percent Sulfur: _____ Percent Ash: _____

Density: _____ lbs/gal Typical Percent Nitrogen: _____

Heat Capacity: _____ BTU/lb _____ BTU/gal

Other Fuel Contaminants (which may cause air pollution): _____

F. If applicable, indicate the percent of fuel used for space heating. NA

Annual Average _____ Maximum _____

G. Indicate liquid or solid wastes generated and method of disposal. NA

PUG MILL FILTER RECEIVER

. Emission Stack Geometry and Flow Characteristics (Provide data for each stack):

Stack Height: 30 ft. Stack Diameter: 0.42 ft.

Gas Flow Rate: 570 ACFM 525 DSCFM Gas Exit Temperature: 80 °F.

Water Vapor Content: 5 % Velocity: 70 FPS

SECTION IV: INCINERATOR INFORMATION

NA

Type of Waste	Type 0 (Plastics)	Type I (Rubbish)	Type II (Refuse)	Type III (Garbage)	Type IV (Pathological)	Type V (Liq.& Gas By-prod.)	Type VI (Solid By-prod.)
Actual lb/hr Incinerated							
Uncontrolled (lbs/hr)							

escription of Waste _____

Total Weight Incinerated (lbs/hr) _____ Design Capacity (lbs/hr) _____

Approximate Number of Hours of Operation per day _____ day/wk _____ wks/yr. _____

Manufacturer _____

Date Constructed _____ Model No. _____

	Volume $(ft)^3$	Heat Release (BTU/hr)	Fuel		Temperature (°F)
			Type	BTU/hr	
Primary Chamber					
Secondary Chamber					

Stack Height: _____ ft. Stack Diamter: _____ Stack Temp. _____

Gas Flow Rate: _____ ACFM _____ DSCFM* Velocity: _____ FPS

*If 50 or more tons per day design capacity, submit the emissions rate in grains per standard cubic foot dry gas corrected to 50% excess air.

Type of pollution control device: [ ] Cyclone [ ] Wet Scrubber [ ] Afterburner

[ ] Other (specify) _____

CLINKER HOPPER FILTER RECEIVER

SECTION III: AIR POLLUTION SOURCES & CONTROL DEVICES (Other than Incinerators)

A. Raw Materials and Chemicals Used in your Process, if applicable:

Description	Contaminants		Utilization Rate - lbs/hr	Relate to Flow Diagram
	Type	% Wt		
Clay fines	Part. Matter	2	9,000	

B. Process Rate, if applicable: (See Section V, Item 1)

1. Total Process Input Rate (lbs/hr): 9,000

2. Product Weight (lbs/hr): 9,000

C. Airborne Contaminants Emitted: (Information in this table must be submitted for each emission point, use additional sheets as necessary)

Name of Contaminant	Emission[1]		Allowed[2] Emission Rate per Rule 17-2	Allowable[3] Emission lbs/hr	Potential[4] Emission		Relate to Flow Diagram
	Maximum lbs/hr	Actual T/yr			lbs/yr	T/yr	
Part. Matter	0.1	0.4	--	0.1	1.2	5.3	

[1]See Section V, Item 2.

[2]Reference applicable emission standards and units (e.g. Rule 17-2.600(5)(b)2. Table II, E. (1) - 0.1 pounds per million BTU heat input)

[3]Calculated from operating rate and applicable standard.

[4]Emission, if source operated without control (See Section V, Item 3).

CLINKER HOPPER FILTER RECEIVER

D. Control Devices: (See Section V, Item 4)

Name and Type (Model & Serial No.)	Contaminant	Efficiency	Range of Particles Size Collected (in microns) (If applicable)	Basis for Efficiency (Section V Item 5)
Pulse jet type baghouse	PM	99	2	Est.
BHA R-04-16-100				

E. Fuels NA

Type (Be Specific)	Consumption*		Maximum Heat Input (MMBTU/hr)
	avg/hr	max./hr	

*Units: Natural Gas--MMCF/hr; Fuel Oils--gallons/hr; Coal, wood, refuse, other--lbs/hr.

Fuel Analysis:

Percent Sulfur: _____ Percent Ash: _____

Density: _____ lbs/gal Typical Percent Nitrogen: _____

Heat Capacity: _____ BTU/lb _____ BTU/gal

Other Fuel Contaminants (which may cause air pollution): _____

F. If applicable, indicate the percent of fuel used for space heating. NA

Annual Average _____ Maximum _____

G. Indicate liquid or solid wastes generated and method of disposal. NA

CLINKER HOPPER FILTER RECEIVER

Emission Stack Geometry and Flow Characteristics (Provide data for each stack):

Stack Height: 30 ft. Stack Diameter: 0.42 ft.

Gas Flow Rate: 570 ACFM 525 DSCFM Gas Exit Temperature: 80 °F.

Water Vapor Content: 5 % Velocity: 70 FPS

SECTION IV: INCINERATOR INFORMATION

NA

Type of Waste	Type 0 (Plastics)	Type I (Rubbish)	Type II (Refuse)	Type III (Garbage)	Type IV (Pathological)	Type V (Liq.& Gas By-prod.)	Type VI (Solid By-prod.)
Actual lb/hr Incinerated							
Uncontrolled (lbs/hr)							

Description of Waste _____

Total Weight Incinerated (lbs/hr) _____ Design Capacity (lbs/hr) _____

Approximate Number of Hours of Operation per day _____ day/wk _____ wks/yr. _____

Manufacturer _____

Date Constructed _____ Model No. _____

	Volume $(ft)^3$	Heat Release (BTU/hr)	Fuel		Temperature (°F)
			Type	BTU/hr	
Primary Chamber					
Secondary Chamber					

Stack Height: _____ ft. Stack Diamter: _____ Stack Temp. _____

Gas Flow Rate: _____ ACFM _____ DSCFM* Velocity: _____ FPS

*If 50 or more tons per day design capacity, submit the emissions rate in grains per standard cubic foot dry gas corrected to 50% excess air.

Type of pollution control device: [ ] Cyclone [ ] Wet Scrubber [ ] Afterburner

[ ] Other (specify) _____

PUG MILL FILTER RECEIVER

1. Process Rates

Process (Transfer) Rate = 9000 lbs/hr

2/3. Uncontrolled and Actual Emissions

A. Uncontrolled Particulate Matter Emissions

Based on 0.27 lb/ton of material (pneumatic cement transfer operation factor, AP-42, Section 8-10).

PM = 0.27 lb/ton x 9000 lbs/hr x ton/2000 lbs

= 1.22 lb/hr

x 8760 hrs/yr x ton/2000 lbs

= 5.3 tons/yr

B. Actual Particulate Matter Emissions

Based on 0.02 gr/dscf exit gas loading.

PM = 0.02 gr/dscf x 525 scf/min x lb/7000 gr x 60 min/hr

= 0.1 lb/hr

x 8760 hrs/yr x ton/2000 lbs

= 0.4 ton/yr

4. Control Device Details

Model:	R-04-16-100, Pulse Jet
Cloth Area:	1933 sq. ft.
Air/Cloth:	3.4 to 1

Revised 9/93

5. <u>Control Efficiency</u>

Inlet	=	1.22 lb/hr
Outlet	=	0.1 lb/hr
Required Efficiency	=	(1.22 - 0.1) x 100/1.22 = 92%
Expected Efficiency	=	99%

CLINKER HOPPER FILTER RECEIVER

1. Process Rates

Process (Transfer) Rate = 9000 lbs/hr

2/3. Uncontrolled and Actual Emissions

A. Uncontrolled Particulate Matter Emissions

Based on 0.27 lb/ton of material (pneumatic cement transfer operation factor, AP-42, Section 8-10).

PM = 0.27 lb/ton x 9000 lbs/hr x ton/2000 lbs

= 1.22 lb/hr

x 8760 hrs/yr x ton/2000 lbs

= 5.3 tons/yr

B. Actual Particulate Matter Emissions

Based on 0.02 gr/dscf exit gas loading.

PM = 0.02 gr/dscf x 525 scf/min x lb/7000 gr x 60 min/hr

= 0.1 lb/hr

x 8760 hrs/yr x ton/2000 lbs

= 0.4 ton/yr

4. Control Device Details

Model:	R-04-16-100, Pulse Jet
Cloth Area:	1933 sq. ft.
Air/Cloth:	3.4 to 1

Revised 9/93

5. <u>Control Efficiency</u>

Inlet	=	1.22 lb/hr
Outlet	=	0.1 lb/hr
Required Efficiency	=	(1.22 - 0.1) x 100/1.22 = 92%
Expected Efficiency	=	99%

BHA Group, Inc
BHA Company
PrecipTech, Inc.
Filtra GmbH

The revised scope of work consists of a pneumatic system for the Kiln No. 5 baghouse to transfer the collected dust to the dust silo system located at the feed end of the kiln. The collected dust from the silo will discharge into one of two pneumatic systems and convey the dust to a surge hopper (by Florida Solite) located above a clinker hopper located at the finish end of the kiln or a pug mill located in the raw material shed. The layout and design is based upon the line sketch faxed to us and our phone conversations.

The following specifications were used to design and size the systems:

System1	System 2A	System 2B
4,000 Lbs, per hour of rock dust (max 5,000).	6000 Lbs, per hour of rock dust	6000 Lbs, per hour of rock dust
60 Lbs. per cu. ft.	60 Lbs. per cu. ft.	60 Lbs. per cu. ft.
160 ft. horizontal	320 ft. horizontal	90 ft. horizontal
70 ft. vertical	70 ft. vertical	30 ft. vertical
(5) 90° elbows	(6) 90° elbows	(2) 90° elbows
(1) 45° elbow		

The two (2) systems will consist of the following components:

System 1: Baghouse To Dust Silo Pneumatic System

- One (1) air inlet filter with replaceable wire mesh elements with weatherhood.
- Two (2) 4" blow thru adapters.
- Five (5) 4" basalt 90° elbows with loose companion flanges.
- One (1) 4" basalt 45° elbow with loose companion flanges.
- One (1) inline secondary filter.

LIME SYSTEM

CINCINNATI FAN & VENT. CO.
MODEL NO. : PB-12A
WHEEL/PROF TYPE : 12 X 2.875
INLET DIA. : 7 IN.
SPEED : SEE BELOW
DENSITY : .075 LB/CU FT.
DATE : 01-01-1980
PC NO. : 1943-02

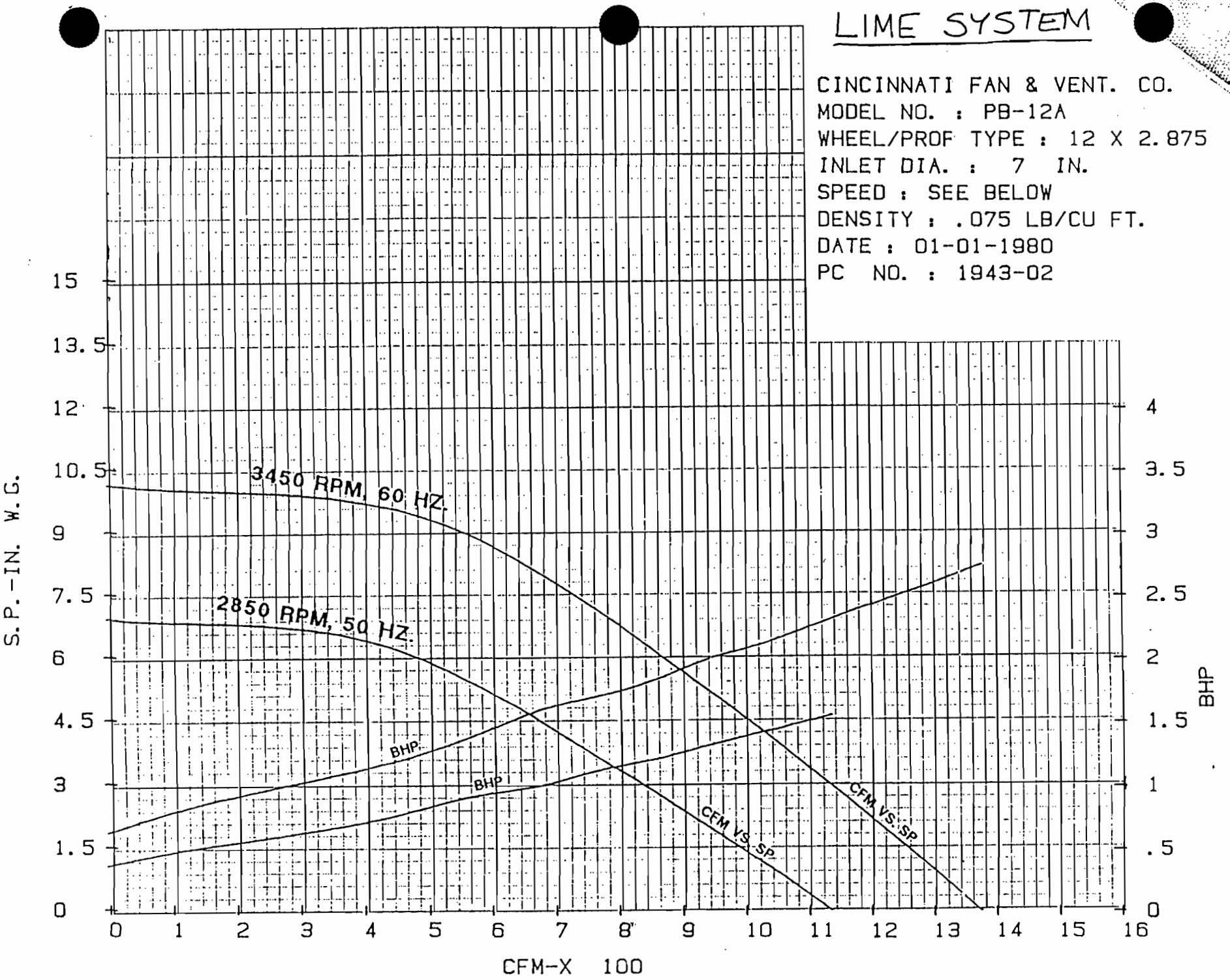

EQUIPMENT LAYOUT
FLORIDA SOLITE

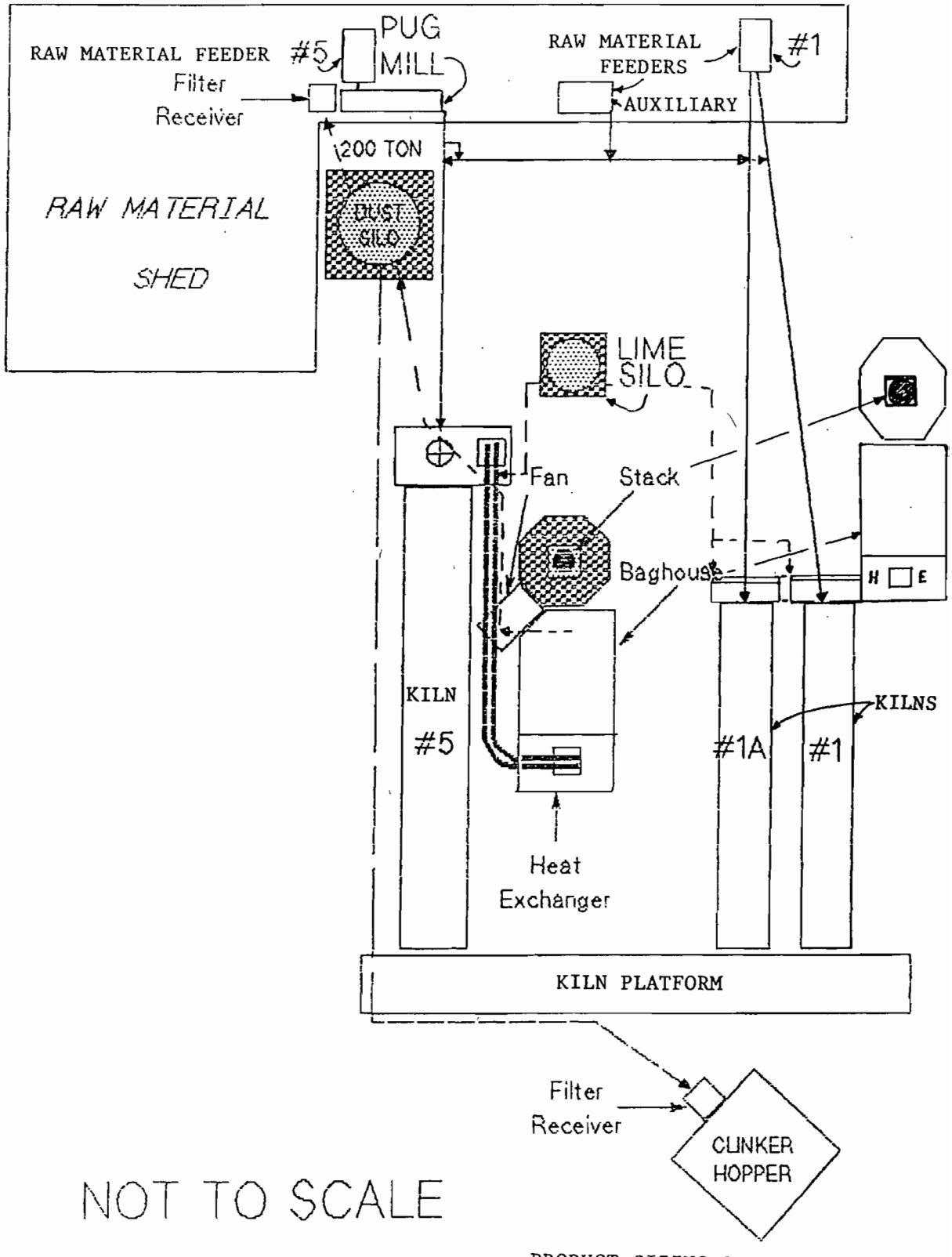

NOT TO SCALE

PRODUCT SIZING & STORAGE AREA

ATTACHMENT 8

CONTINUOUS MONITORING EQUIPMENT INFORMATION

Rosemount Analytical

Model 880A
Infrared Analyzer – CO

- *Microprocessor-Controlled*
- *Routine Adjustments made from Front Panel Keypad*
- *Luft Detector Technology*
- *Front Panel Pushbutton Calibration*
- *Standard Linearizer Field Adjustable*
- *Optional Auto Zero/Span*
- *Field Changeable Configurations*
- *Optional Remote Range Change and ID*
- *LCD Display with Backlighting*
- *Adjustable Speed of Response*

The Rosemount Analytical Model 880A is a microprocessor-controlled infrared analyzer designed to cover a wide range of process, stack and automotive applications. Time-proven Luft detector technology, microprocessor operation, user-friendly software and many other features make the Model 880A an industry benchmark. Ease of operation and calibration, programmable linearizing coefficients, field retrofitable configurations, selectable speed of response and proven reliability are just a few of the many standard features you expect from a worldwide leader in non-dispersive infrared technology.

FEATURES

The Model 880A, the first all microprocessor-controlled infrared analyzer, offers the convenience of complete setup and operation from the front panel keypad. The component of interest, range span, linearizing coefficients and zero/span parameters are all set with these keys. A calibration gas control option allows two solenoids to be remotely actuated from the front panel, enabling one person calibrations without leaving the analyzer. An automatic zero/span option is also available for unattended calibration of all three ranges.

Calibration is made even easier with the addition of two new features–calibration error messages and single key calibration. The calibration messages alert the user, while performing the zero or span operation, that preset limits of adjustment have been reached, and that maintenance, such as cleaning the cells, is required. The single key calibration for either zero or span automatically calibrates the analyzer to programmed values with the push of a button.

The microprocessor offers a choice of readout units. The analyzer can be set up and calibrated to read percent of full scale, or by actuating the linearizer, can be set to read engineering units. An additional advantage offered by the microprocessor is analyzer diagnostic functions. Through access of the front panel mode key, the user can quickly check the status of four operational parameters without interrupting the continuous operation of the analyzer. The pre-programmed diagnostic function checks the oscillator tune, source current, detector signal and power supply voltages.

Four user programmable function keys are available to enable the frequent checking of a single diagnostic point or set point modification. Once programmed, a simple push of the key will instantly allow access to the specific diagnostic data or allow for changes in the range setting, alarm setpoint, current output scaling, time constant or any other preset function.

The flexibility of the Model 880A is further increased by the ability to reconfigure the analyzer in the field. For instance, ranges may be changed or the analyzer's linearizer can be adjusted for specific user gas values. The individual target gas can also be changed, for appropriate cell lengths, by simply changing the detector and the analyzer setup.

The operation of the Model 880A can be enhanced with the choice of several options. In addition to the zero/span options already mentioned, current output with zero suppression is also new. In normal use the 0/4 to 20 mA current output can be set to represent 0% of scale.

FEATURES (continued)

In the suppressed range mode selected from the front panel, the current output represents any suppressed range with at least a 25% span, such as 10% to 35%, 20% to 80% or 75% to 100% of scale. User set dual alarms are available with configurable HI/LO designations and deadband. Also available is an optional remote range change and ID with keypad-selectable decimal or binary codes.

In vehicle emissions measurements where small deviations may determine the course of development programs, or in process applications, where yield is related to precision, an accurate analyzer with precise measurement capabilities is essential.

Precision is a key feature of the superior performance of the Model 880A. High sensitivity, coupled with optical path length selection, permit measurements from parts per million to 100% concentrations. With precision to 1% of full scale, measurement deviation is minimized on even the most sensitive ranges.

The completely enclosed beam chopper provides high stability and freedom from atmospheric interferences in the testing location. Glass sample and reference cells improve stability by eliminating zero drift, typically caused by cell corrosion, and provide superior light-energy transmittance creating high detector signals with inherently low noise levels.

The improved IR sources with their constant current source driver and the chopper motor controlled by a quartz crystal enhance detector-signal stability, provide drift-free performance and completely eliminate changes due to power line frequency variations.

In addition, the analyzer utilizes the Luft detector principle which has high sensitivity and high interference rejection capability.

Speed of response is field selectable from 0.5 seconds for high speed monitoring, to twenty seconds for closed loop process or emission control. Speed of response can be set independently for each range.

The Model 880A is a relay rack-mounted design, also suitable for panel or table mount. Materials in contact with the sample include 316 stainless steel fittings, glass cells and Teflon* tubing. The analyzer is constructed with a slide-out chassis to allow convenient access to all internal components.

PRINCIPLE OF OPERATION

The Model 880A Analyzer produces infrared radiation from two separate energy sources. This radiation is modulated by a chopper into 5 Hz pulses. Depending on the application, the radiation may then pass through optical filters to reduce background interference from other infrared-absorbing components. Each infrared beam passes through a separate cell, one cell contains a continuous flowing sample while the other cell is either sealed or contains a continuous flowing reference gas.

During operation, a portion of the infrared radiation is absorbed by the component of interest in the sample, with the quantity of infrared radiation absorbed being proportional to the component concentration. The detector is a "gas microphone" based on the Luft principle, converting the difference in energy between sample and reference cells to a change in capacitance. This capacitance change, equivalent to component concentration, is amplified and indicated on the display and, if desired, transmitted to a data acquisition device and/or controller.

*Teflon is a registered trademark of E.I. duPont deNemours & Co., Inc.

APPLICATIONS*

The Model 880A Analyzer is designed for a variety of process and automotive applications where a particular component in a gaseous stream must be continuously monitored. Typical measurements include:

Chemical and Petroleum
- Carbon Dioxide: Ethylene Oxide Manufacture, Phthalic Anhydride Manufacture, Ammonia Manufacture, Producer Gas Monitor, Nitrogen Generation
- Carbon Monoxide: Stack Monitoring
- Methane: Ammonia Manufacture
- Acetylene: Acetylene Manufacture, Acrylonitrile Manufacture, Vinyl Chloride Manufacture
- Sulfur Dioxide: Sulfuric Acid Stack Gas

Food and Agriculture
- Carbon Dioxide & Water Vapor: Blanketing of Perishables, Fermentation Processes, Photosynthesis Studies, Personnel Protection

Aerospace and Oceanography
- Carbon Dioxide, Carbon Monoxide & Water Vapor: Diving and Space Chambers

Metals and Ceramics
- Carbon Dioxide: Producer Gas Monitor, Steel Converting, Cement Manufacture, Soaking Pit, Heat Treating
- Carbon Monoxide: Inert Gas Generation, Producer Gas Monitor, Rotary Kiln Roasting, Tin Plant Annealing, Steel Converting, Aluminum Powder Processing, Porcelain Kilns, Tunnels
- Water Vapor: Heat Treating, Hydrogen Brazing, Nickel and Chrome Plating
- Sulfur Dioxide: Flash Smelting
- Ammonia: Ammonia Dissociation

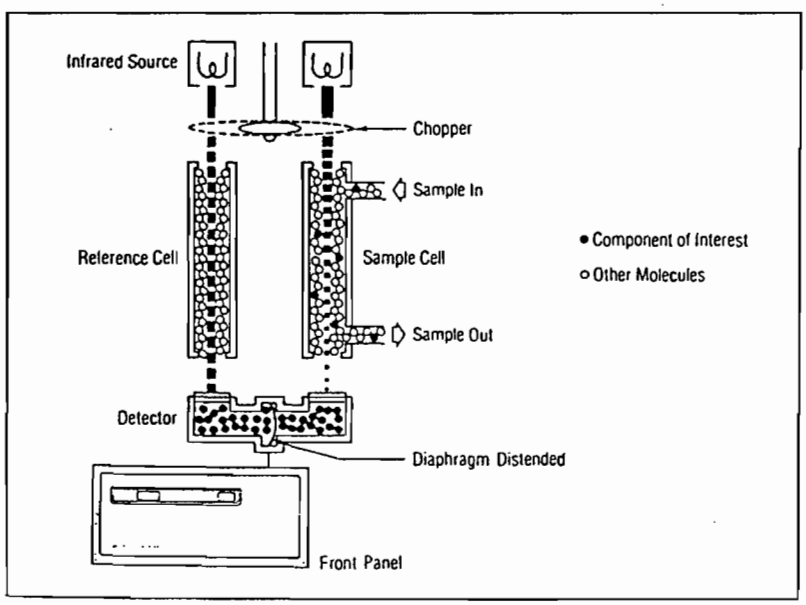

TYPICAL CONFIGURATIONS

NO.	APPLICATION
10	0-1 ➤ 5% CO
11	0-1000 ➤ 5000 ppm CO
12	0-1 ➤ 5% CO
14	0-100 ➤ 1000 ppm CO
16	0-200 ➤ 1000 ppm CO
18	0-2 ➤ 10% CO
22	0-½ ➤ 2½ % CO_2
22	0-5 ➤ 20% CO_2

NO.	APPLICATION
27	0-10 ➤ 100 ppm CO_2
32	0-5 ➤ 10% CH_4*
36	0-500 ➤ 5000 ppm CO_2
38	0-500 ➤ 5000 ppm CO_2
46	0-10 ➤ 100 ppm SO_2
66	0-200 ➤ 1000 ppm SO_2
74	0-5% H_2O
85	0-300 ➤ 1500 ppm NH_3

*Analyzers sampling flammable gases must be protected by a continuous dilution purge system in accordance with standard ANSI/NFPA 496-1989, Chapter 8. Consult factory for recommendations.

SPECIFICATIONS

Precision: 1% of full scale
Noise: 1% of full scale
Zero Drift*: ±1% of full scale per 24 hours/±2% of F.S./week
Span Drift*: ±1% of full scale per 24 hours/±2% of F.S./week
Response Time (Electronic): Variable, 90% of full scale in 0.5 sec. to 20 sec., field selectable
Sensitivity:
100 ppm full scale carbon monoxide at atmospheric pressure
50 ppm full scale carbon dioxide at atmospheric pressure
Sample Cell Length: 0.04 inches (1mm) to 15.0 inches (381mm)
Materials in Contact with Sample:
Windows: Sapphire, quartz, Irtran[3]
Cells: Gold-plated Pyrex[1] or stainless steel
Tubing: FEP Teflon[2]
Fittings: 316 stainless steel
O-Rings: Viton-A[2]
Sample Flow Rate: Nominal 500 to 1,000 cc/min.
Sample Pressure: Max. 10 psig (higher pressures used in pressurized cell applications)
Ambient Temperature Range: 59 °F to 95 °F (15 °C to 35 °C)
Range: 32 °F to 113 °F (0 °C to 45 °C) with optional case heater
Analog Output:
Standard (Potentiometric): 0 to 5 VDC
Optional (Current): 0/4 to 20 mA
Linearization: Keypad entered coefficients for linearizing 1, 2, or all 3 ranges
Power Requirements: 115 volts AC/230 volts AC ± 10%, 50/60 Hz ± 3Hz, 150 watts (300 watts with optional case heater)

*Performance specifications based on ambient temperature shifts of less than 20 °F (11 °C) per hour.
[1]Pyrex is a registered trademark of Corning Glass Works.
[2]Teflon and Viton are registered trademarks of E.I. duPont deNemours & Co., Inc.
[3]Irtran is a registered trademark of Eastman Kodak Co.

Alarm Option: Two single point, field programmable high or low, deadband up to 20% of full scale
Alarm Relay Outputs: Two form C contacts rated 3A-125/250 VAC or 5A-30 VDC, (resistive)
Calibration Gas Control Option: Two front panel actuated contact closures
Calibration Gas Control Outputs: Two form C contacts rated 3A-125/250 VAC or 5A-30 VDC, (resistive)
Auto Zero/Span Output: Four contact closures, field programmable frequency and duration of closure. Two contact closures for indication of insufficient zero and span adjustment
Auto Zero/Span Relay Outputs: Four form C contacts rated 3A-125/250 VAC or 5A-30 VDC, (resistive)
Two form A contacts rated at (resistive load):
Max. switching power: 10 watts
Max. switching voltage: 200 VDC
Max. switching current: 0.5A
Remote Range Change & ID Option: Three remotely changeable ranges with positive identification. Binary or decimal code, field selectable.
Remote Range Change Relay Output: Eight form A contacts rated at (resistive load):
Max. switching power: 10 watts
Max. switching voltage: 200 VDC
Max. switching current: 0.5A
Enclosure: General purpose for installation in weather-protected area
Overall Dimensions:
8-11/16 inches (220 mm) H
19 inches (483 mm) W
19 inches (483 mm) L, standard case
24 inches (610 mm) L, extended case
Instrument Weight:
56 pounds (25 kg), standard case
68 pounds (31 kg), extended case

Specifications subject to change without notice.

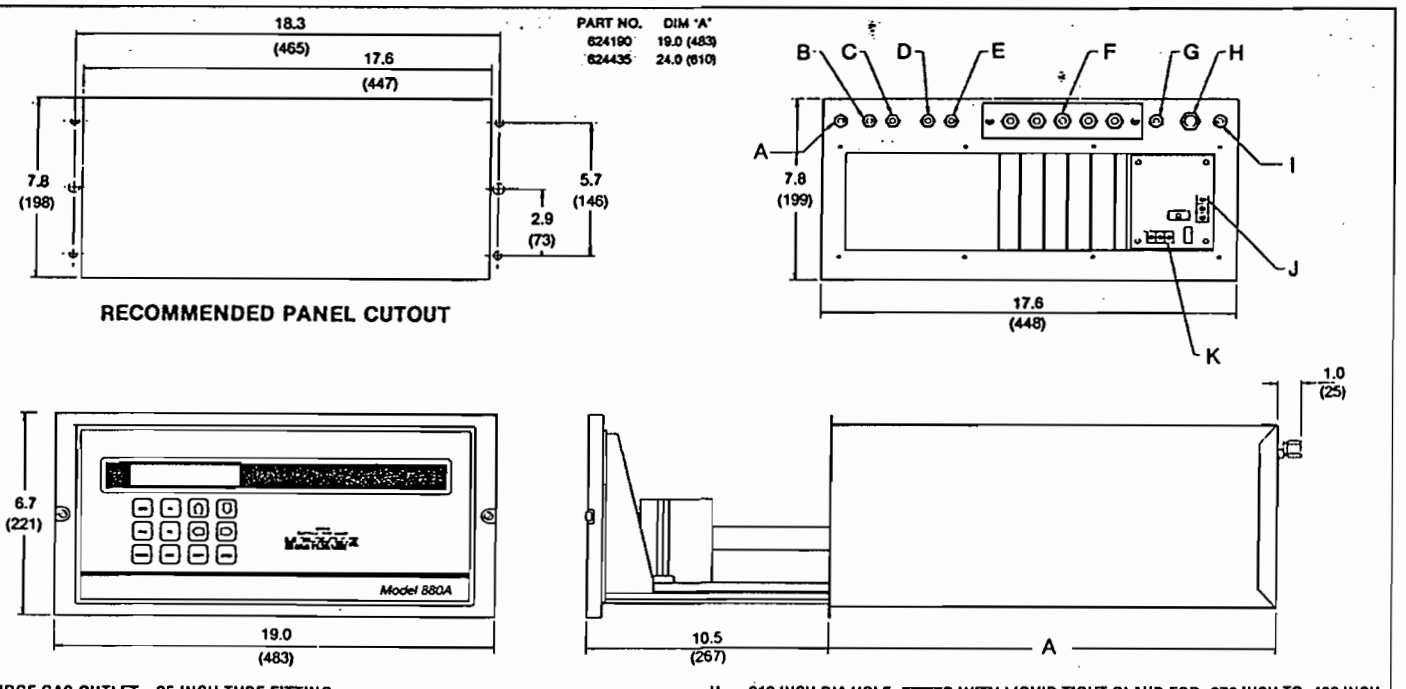

A. PURGE GAS OUTLET, .25 INCH TUBE FITTING.
B. REFERENCE OUTLET, .25 INCH FITTING (SOME APPLICATIONS)
C. REFERENCE INLET, .25 INCH TUBE FITTING (SOME APPLICATIONS)
D. SAMPLE OUTLET, .25 INCH TUBE FITTING
E. SAMPLE INLET, .25 INCH TUBE FITTING
F. FIVE .625 DIA HOLES FOR OPTION BOARD CABLE CONNECTIONS,LIQUID TIGHT GLAND FOR .187 INCH TO .312 DIA CABLE SUPPLIED IN OPTION KIT (CABLE SUPPLIED BY CUSTOMER, MINIMUM 24 AWG)
G. .625 DIA HOLE FOR RECORDER OUTPUT CABLE, LIQUID TIGHT GLAND FOR .187 INCH TO .312 INCH DIA CABLE SUPPLIED IN SHIPPING KIT (CABLE SUPPLIED BY CUSTOMER, 2 CONNECTOR, MINIMUM 18 AWG)
H. .812 INCH DIA HOLE, FITTED WITH LIQUID TIGHT GLAND FOR .270 INCH TO .480 INCH DIA POWER CABLE IF MOUNTED IN PROTECTED RACK OR CABINET OR ON A BENCH. AN ACCESSORY KIT, P/N 654008, IS AVAILABLE WHICH INCLUDES A 10 FT. NORTH AMERICAN POWER CORD SET ALONG WITH FOUR ENCLOSURE SUPPORT FEET FOR BENCH TOP USE. IF MOUNTED IN UNPROTECTED RACK OR PANEL, REMOVE GLAND AND WIRE POWER VIA CONDUIT OR ELECTRICAL METAL TUBING. (3 CONDUCTOR, 18 AWG MINIMUM)
I. PURGE GAS INLET, .25 INCH TUBE FITTING.
J. TB1, CUSTOMER HOOK-UP FOR POWER
K. TB2, CUSTOMER HOOK-UP FOR RECORDER OUTPUT.

8803	MODEL 880A INFRARED ANALYZER, 19-INCH CASE, P/N 191809
8804	MODEL 880A INFRARED ANALYZER, 24-INCH CASE, P/N 191810

APPLICATION SELECTION (Choose one)
For 19-inch Case: 06, 07, 08, 10, 11, 12, 13, 18, 19, 20, 21, 22, 23, 26, 29, 30, 31, 32, 33, 34, 35, 36, 38, 39, 41, 42, 43, 45, 56, 63, 64, 65, 71, 72, 74, 76, 81, 82, 83, 84, 99
For 24-inch Case: 14, 15, 16, 24, 25, 27, 37, 44, 46, 56, 66, 75, 85, 86, 99

CODE	RANGE
0	Standard – Ranges w/Calibration Curves
1	One Non-Standard Range w/Calibration Curve
2	Two Non-Standard Ranges w/Calibration Curve
3	Three Non-Standard Ranges w/Calibration Curve
9	Special

CODE	LINEARIZATION
0	None
1	One Standard Range
2	Two Standard Ranges
3	One Non-Standard Range
4	Two Non-Standard Ranges
5	Three Non-Standard Ranges
6	Two Standard Ranges and One Non-Standard
9	Special

CODE	TEMPERATURE CONTROL
0	None (See Note 1)
1	Case Heater/Controller
9	Special

CODE	OUTPUT OPTIONS (See Note 2)
00	None (Standard 0-5 VDC)
01	Option Board Mounting Kit (See Note 2)
10	Isolated Current Output
11	Dual Alarms
12	Isolated Remote Range Control
20	Current Output plus Dual Alarms
21	Current Output plus Remote Range Control
22	Dual Alarms plus Remote Range Control
30	Current Output plus Dual Alarms plus Remote Range Change
99	Special

ACCESSORIES

PART NUMBER	DESCRIPTION
748250	Additional Instruction Manual
654008	Kit, Power Cord/Enclosure Supports (10 Ft. North American Powercord Set Plus 4 Enclosure Supports for Bench Mounting)
634958	Kit, Enclosure Supports (4) only for Bench Mounting

CODE	CALIBRATION INTERFACE
0	None
1	Calibration Gas Control (Selection in position 10 & 11 above cannot be 00)
2	Automatic Zero & Span (Selection in position 10 & 11 cannot be 00)
9	Special

8803	12	0	2	0	01	1	(EXAMPLE)

ORDERING MATRIX -12 POSITIONS

NOTE 1: Case Heater/Controller may be required for ambient temperature ranges outside of 15-35 °C for some applications

NOTE 2: This Kit is necessary if customer is not ordering options with instrument, but will order in future for field installation.

ACCESSORY: Air Purge Kit - Part Number 624446, Per Type Z, ANSI/NFPA 496-1989, Chapter 2. When installed with user supplied components, meets requirements for Class I, Division 2 locations per National Electrical Code (ANSI/NFPA 70). for analyzers sampling non-flammable gases. Analyzers sampling inflammable gases must be protected by a continuous dilution purge system in accordance with Standard ANSI/NFPA 496-1989, Chapter 8. Consult factory for recommendations.

©Rosemount Analytical Inc. 1992

Rosemount Analytical Inc.
600 South Harbor Boulevard
La Habra, CA 90631
TEL. (310) 690-7600
Telex: 160418
FAX: (310) 690-7127

ROSEMOUNT®

Measurement
Control
Analytical
Valves

Rosemount Analytical

Model 755R
Paramagnetic Oxygen Analyzer
(For Rack Mounting)

- *Measures Oxygen in Stationary Source Monitoring Applications*
- *± 0.01% O_2 Sensitivity*
- *Standard 19" Rack Mounting*
- *7 Field Selectable Ranges*
- *Remote Range Selection*
- *Long Term Continuous Operation*
- *Small, Rugged, Shock Resistant Sensing Unit*

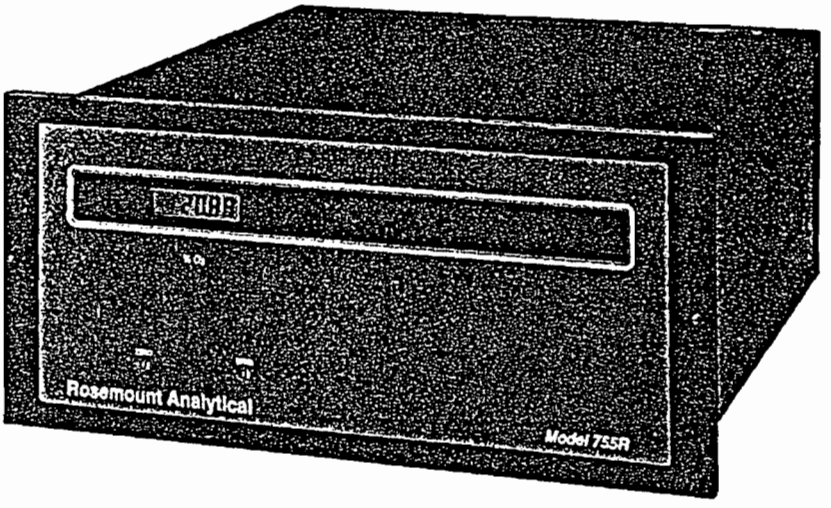

FEATURES

Simplified operation and ease of maintenance are the key design features of Rosemount Analytical's Model 755R Paramagnetic Oxygen Analyzer. Designed for continuous O_2 measurement, the Model 755R delivers top performance and reliability. With a wide variety of Field Selectable Ranges, alarm and current output options, and a small, rugged sensing unit, the Model 755R is designed to meet the requirements of a wide variety of applications. Applications include process control, Continuous Emissions Monitoring Systems (CEMS), industrial gas production and fermentation process monitoring. The paramagnetic measurement technique offers distinct operating advantages of faster response and linear output over other techniques such as thermal conductivity and electro chemical sensing.

Featuring a sensitivity of ±0.01% Oxygen, the Model 755R Paramagnetic Oxygen Analyzer delivers accurate measurement over a wide selection of full scale ranges. The instrument has a matrix option for remote range selection. This allows the user to have the ability to switch between five ranges from a remote location.

Simplified operation and maintenance of the Model 755R are assured by the convenience of front pull out access to all serviceable parts and operating controls.

A 4½ digit backlighted LCD display insures high visibility of direct reading concentration at all levels of ambient light. Designed for selected range operation, the Model 755R front panel includes recessed zero and span controls, leaving a clean, modern instrument look.

PRINCIPLE OF OPERATION

The Model 755R measures the paramagnetic susceptibility of oxygen, which is much higher than the susceptibility of other common gases. When oxygen is present in a magnetic field, the oxygen tends to concentrate in the area of the magnetic fields. Even though the Model 755R measures the total magnetic susceptibility of the sample, it is almost entirely due to the oxygen present, so the measurement is an accurate indication of oxygen content.

The test body is mounted on a platinum suspension in a non-uniform magnetic field. The magnetic force exerted upon the test body is proportional to the difference in the volume magnetic susceptibilities of the test body and the surrounding gas. If the gas is more paramagnetic than the test body, the magnetic force tends to repel the test body; and if the gas is less paramagnetic, the magnetic force tends to attract the test body into the magnetic field.

A diamond-shaped mirror is mounted in the platinum suspension which reflects light from pre-focused light source equally onto two photocells when the test body is in the neutral position.

When the volume magnetic susceptibility of the gas increases, a magnetic force is applied to the test body tending to rotate it out of the field. The suspension mirror on the test body also rotates, so that the photocells become unequally illuminated and, through an amplifier, apply feedback current to the test body. The electromagnetic force generated by the feedback current is opposite and almost equal to the magnetic force. This current is a linear function of the oxygen concentration. This effect of this current is converted to an output that may be recorded for a permanent record of oxygen concentration.

SPECIFICATIONS*

Physical Specifications

Case Mounting: Rack mounting, 19 inch (IEC 297-1, 1986)

Case Classification: General purpose

Physical Performance Specifications

Standard: 0 to 5, 0 to 10, 0 to 25, 0 to 50, and 0 to 100% oxygen)

Optional: 0 to 1, 0 to 2.5, 0 to 5, 0 to 25, 0 to 50, and 0 to 100% oxygen)

Remote Range Selection: Maximum 5 ranges (See matrix for range selection options)

Response Time: 90% of fullscale, 20 seconds

Reproducibility: 0.01% oxygen or ± 1% fullscale, whichever is greater

Ambient Temperature Limits: Maximum 113 °F (45 °C) Minimum: 32 °F (0 °C)

Zero Drift: ± 1% fullscale per 24 hours, provided that ambient temperature does not change by more than 20 °F (11.1 °C)

±2.5% of fullscale per 24 hours, with ambient temperature change over entire range

Zero Drift: ± 1% fullscale per 24 hours, provided that ambient temperature does not change by more than 20 °F (11.1 °C)

±2.5% of fullscale per 24 hours, with ambient temperature change over entire range

Electrical Specifications

Supply Voltage and Frequency

Standard: 115 VAC ± 10%, 50/60 Hz

Optional: 230 VAC ± 10%, 50/60 Hz

Power Consumption: 300 watts maximum, 75 watts nominal

Weight: 46 lbs. (21 kg)

Outputs: Standard: Field selectable voltage output of 0 to 10 mV, 0 to mV, 0 to 1 V, or 0 to 5 VDC

Optional: Isolated current output of 0 to 20 mA or 4 to 20 mA is obtainable through plug-in of optional circuit board

Optional Alarms Specifications: Dual (high and low) independently-adjustable alarm. Form C contact ratings

Alarm Contact Ratings:

5 A, 240 VAC resistive
1 A, 240 VAC inductive
5 A, 120 VAC resistive
3 A, 120 VAC inductive
5 A, 30 VDC resistive
3 A, 30 VDC inductive

Setpoint: Adjustable from 1% to 100% fullscale

Deadband: Adjustable from 1% to 20% fullscale. Factory set to 10% of fullscale

Sample Specifications

Sample Dryness: Sample dewpoint below 100 °F (43 °C), sample free of entrained liquids

Sample Temperature Limits: Maximum: 150 °F (65 °C) Minimum: 50 °F (10 °C)

Operating Pressure Limits: Maximum: 10 psig (69 kPa) Minimum: 5 psig vacuum (33.6 kPa vacuum)

Sample Flow Rate: Maximum: 500 cc/min.
Minimum: 50 cc/min.
Recommended: 250 ± 20 cc/min.

Materials in Contact with Sample Gas: Glass, 316 stainless steel, titanium, Paliney No. 7**, epoxy resin, Viton A*** platinum, nickel and MgF_2.

*Performance specifications are measured at recorder output and are based on constant sample pressure and deviation from set flow held to within 10% or 20 cc/min., whichever is smaller.

**Paliney No. 7 is a trademark of J.M. Ney Co., Hartford, CT.

***Viton A is a trademark of E.I. duPont de Nemours Co.

Note: The Model 755R is intended for use as an industrial process measurement device only. It is not intended for use in medical, diagnostic or life support applications.

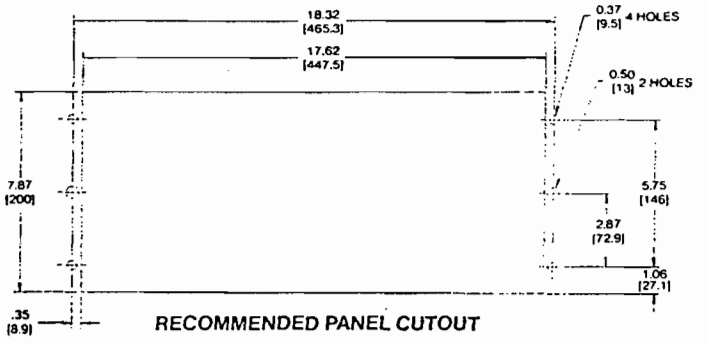

RECOMMENDED PANEL CUTOUT

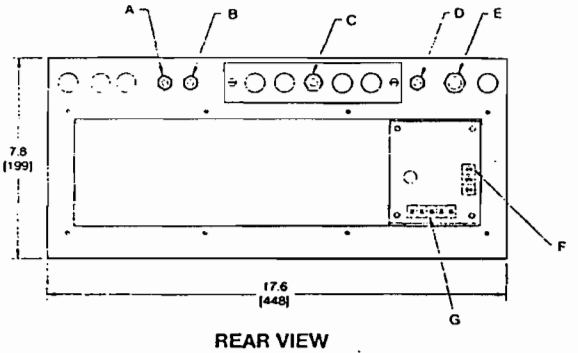

REAR VIEW
(REAR TERMINAL COVER REMOVED FOR CLARITY)

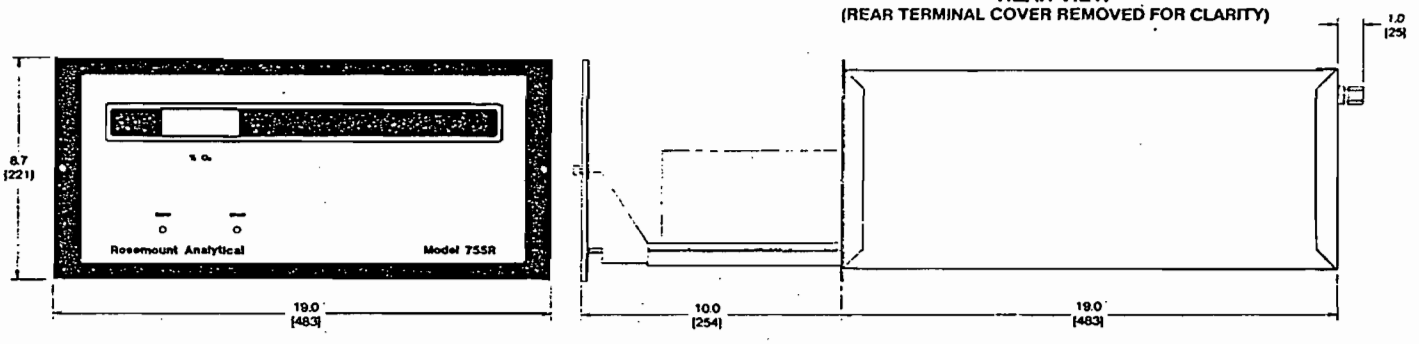

NOTES:

A SAMPLE OUTLET, .25 TUBE FITTING
B. SAMPLE INLET, .25 INCH TUBE FITTING
C. ONE .625 DIA. HOLE FOR DUAL ALARM OPTION CABLE (CABLE SUPPLIED BY CUSTOMER, MINIMUM 24 AWG)
D. ONE .625 DIA. HOLE FOR RECORDER OUTPUT CABLE (CABLE SUPPLIED BY CUSTOMER, 2 CONDUCTOR, MINIMUM 18 AWG)
E. .812 DIA. HOLE FOR POWER CABLE (CABLE SUPPLIED BY CUSTOMER 3 CONDUCTOR, MINIMUM 18 AWG)
F. TB1, CUSTOMER HOOKUP FOR POWER
G. TB2, CUSTOMER HOOK-UP FOR RECORDER OUTPUT
H. ALARM ASSEMBLY CONNECTIONS

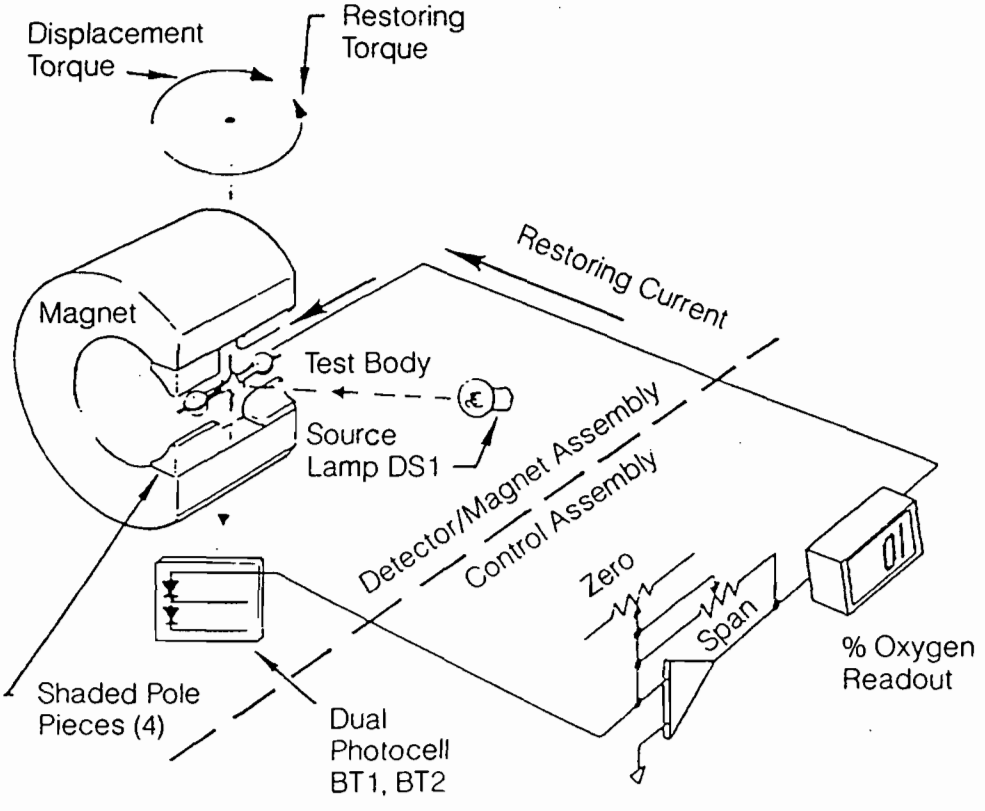

7553	MODEL PARAMAGNETIC O_2 ANALYZER, P/N 192802

CODE	RANGE
00	Standard - 0-5, 10, 25, 50 and 100% O_2
01	Extended - 0-1, 2.5, 5, 10, 25, 50 and 100% O_2**
99	Special

CODE	OUTPUT
0	Standard Voltage: 0-10 mV, 100 mV, 1V and 5 VDC
1	Current: 0/4 to 20 mA
9	Special

CODE	ALARM
0	No Alarm
1	Dual Alarm
9	Special

CODE	CASE
0	Standard
1	Standard w/Tropicalization
9	Special

CODE	OPERATION
0	115 VAC, 50/60 Hz
1	230 VAC, 50/60 Hz
9	Special

CODE	REMOTE RANGE
0	No Remote Range
1	Remote Range (Standard) 0-5, 10, 25, 50, 100%
2	Remote Range (Extended)** 0-1, 2.5, 5, 10, 25%
3	0-1, 2.5, 5, 10, 50**
4	0-1, 2.5, 5, 25, 50**
5	0-1, 2.5, 5, 25, 100%**
6	0-1, 2.5, 10, 25, 100%
9	Special

CODE	FEATURE
0	As Selected
9	Not as Selected

7553	00	0	0	0	0	0	0	(EXAMPLE)

** Extended Remote Ranges must be ordered with extended range (i.e., Code Option 1)

ORDERING MATRIX - 12 POSITIONS

ACCESSORIES (Order as separate line item)

PART NUMBER	DESCRIPTION
748213	Instruction Manual
654008	Kit, Power Cord/Enclosure Supports
	(10 Ft. North American Powercord Set Plus
	4 Enclosure Supports for Bench Mounting)
634958	Kit, Enclosure Supports (4) only for Bench Mounting
634061	Powercord (10 Ft. North American) Only

©Rosemount Analytical Inc. 1992

Rosemount Analytical Inc.
600 South Harbor Boulevard
La Habra, CA 90631
TEL. (310) 690-7600
Telex: 160418
FAX: (310) 690-7127

ROSEMOUNT®

Measurement
Control
Analytical
Valves

Best Available Copy

- Straight flowtube design offers longer life, easier cleaning, and is self-draining
- Simple inexpensive 2-wire sensor–to–transmitter connection, up to 3300 feet
- Vacuum sealed flowtubes, fully insulated, eliminates need for heat tracing
- Titanium flowtubes are corrosion and abrasion resistant
- Available for standard or sanitary applications

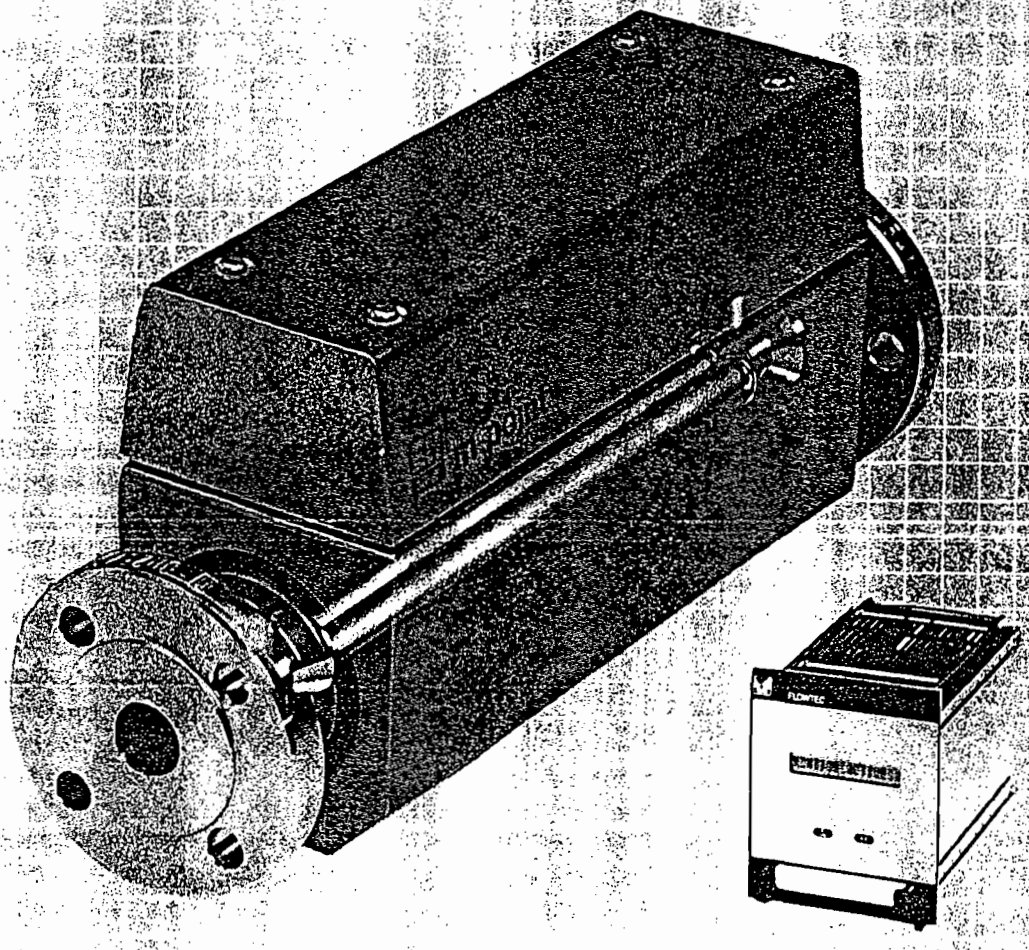

Technical Specifications – Flow Measurement

M–POINT

FTO 1650 / FCO 1655
Mass Flowmeter — LRM flow.

System Features

- Direct mass flow measurement; no additional density, temperature, or pressure sensors required
- Measurement independent of fluid density, pressure, temperature, viscosity or conductivity
- Unaffected by pulsating flow, solid particles, flow profile or small gas bubbles
- Immune to noise from pipe vibrations
- Self-monitoring with fault indication
- Microprocessor-based transmitter and sensor for reliable, precise measurement
- High accuracy: 0.2% of rate
- Compact, easy to install, low-weight sensor
- LCD indicates mass flow rate, totalized flow, density or temperature
- Tamper-proof calibration, yet easily changed in seconds
- Dual outputs: 4–20 mA and scaled pulse
- Bidirectional flow measurement
- Optional density or temperature output

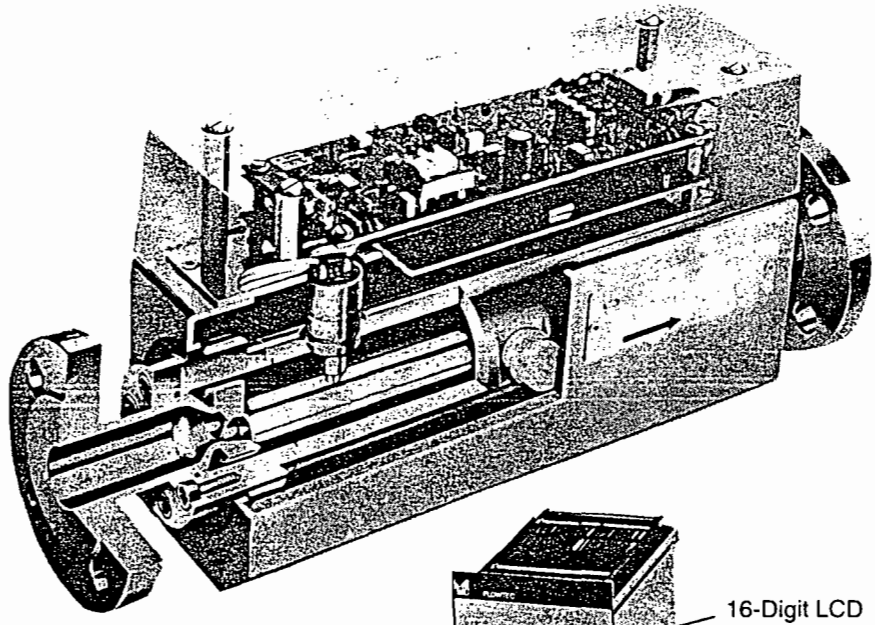

FCO 1655

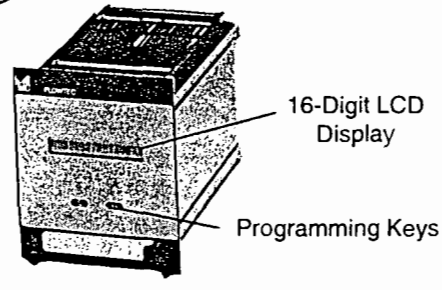

FTO 1650

Direct Mass Flow Measurement

The M–Point directly measures liquid mass flow using the reliable Coriolis technique. This technique eliminates the need to install additional instruments to compensate for density changes. A compact straight flowtube design makes the sensor easier to install and clean. The self-draining flowtubes are constructed of titanium (zirconium, optional) for better corrosion and abrasion resistance to provide a much longer life than other meters that use steel flowtubes.

The flowtubes are welded into a Schedule 160 steel support pipe. The support pipe acts as a secondary containment vessel in the unlikely event that the flowtubes leak. The chamber surrounding the flowtubes is then evacuated and the support pipe is encased in foam. This creates a thermos effect, holding in process heat and eliminating the need for heat tracing lines around the M-Point sensor.

The robust mechanical design and high operating frequency make the M-Point immune to pipe vibration. The flowtube oscillation frequency is 700 to 1100 Hz, which is ten times higher than the vibration encountered in typical installations.

Electronic Accuracy

Typical accuracy is 0.2% of rate with the M–Point system. This high accuracy is assured through individual wet flow calibration in Endress + Hauser's flow laboratory, traceable to NIST standards.

Two flow outputs are supplied from the transmitter: a 4-20 mA mass flow signal for rate control/indication and a pulsed signal for totalizing mass flow. Both outputs are bidirectional to measure flow in the forward and reverse directions in the pipe. The transmitter's LCD indicates mass flow rate, totalized flow, density and temperature. A dual range option enables the user to remotely select an alternate measuring range during periods of high or low flow. An optional 4-20 mA output is available as a density or temperature output (user-selectable).

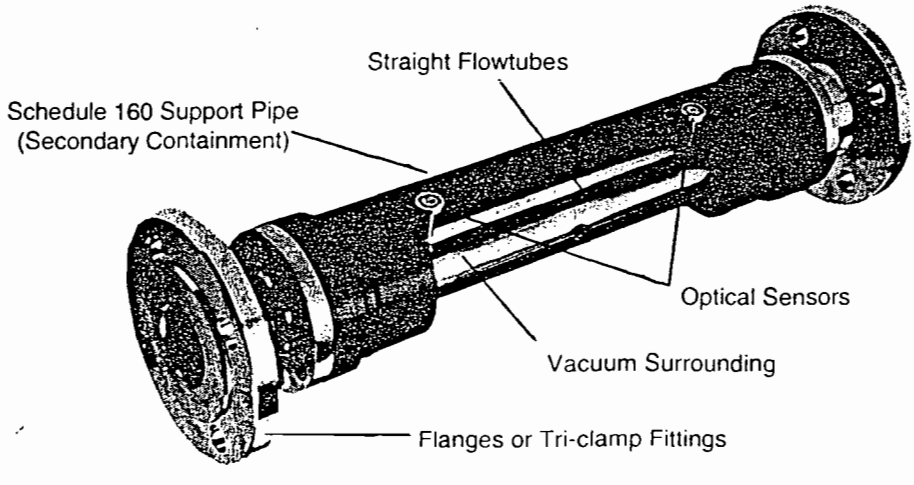

Microprocessor Reliability

Microprocessor-based electronics in the sensor and transmitter ensure reliable, accurate flow measurement. A self-monitoring feature automatically compensates for temperature and aging drift. If a fault is detected by the self-check circuit, it is indicated on the transmitter's LCD in combination with a separate alarm output.

To prevent tampering or accidental calibration changes, the M–Point features a "sentry" technique that requires pushbuttons to be pressed in a certain sequence to access programming modes. Simple pushbutton calibration also eliminates errors associated with potentiometers and switches that can't offer calibration security.

Calibration

The M–Point sets a new standard for flowmeter versatility. Custom tailoring to your process characteristics is easily accomplished. Using only two pushbuttons and the 16–digit interactive display, simple programming steps guide you through customizing the M–Point's performance.

Changes in your process can be programmed easily in familiar engineering units without using external calibration equipment or interrupting the process.

Engineering units available include lb/min, ton/min, lb/h, and ton/h. Metric units include kg/s, t/s, kg/h and t/h. A programmable floating decimal point allows entry of flow rates with the desired degree of resolution.

Size Selection

A computer program is available free of charge for proper meter sizing. Please contact your local Endress + Hauser sales office for your free copy.

Selecting the proper size sensor is based on three criteria:

Mass flow to be measured.

The minimum and maximum flow ranges for all sizes are shown in the chart below. Select the size which best matches your flow range. The optimum ranges are considered to be 20–50% of the maximum full scale flow.

Size		Full Scale Flow (lb/min)		Flowtube Diameter
in	mm	min	max *	in
0.37	8	3.7	73.5	0.22
0.5	15	12	165	0.34
1	25	32.5	460	0.45
1.5	40	55	735	0.67
2	50	130	1830	0.93
3	80	320	3670	1.40

* Maximum flow listed is based on a SG of 1.0

Allowable pressure loss.

Refer to the pressure loss graph below for the size of sensor required. This graph serves as a guideline only, applicable for fluids with viscosity and density near that of water at 70°F.

Line size of the process pipe.

Although line size and sensor size need not be identical, the line size should not be smaller than the sensor size to ensure that the sensor flowtubes are full.

The maximum full scale flow rate for other liquids can be determined using the following formula.

$$M_L = M_W \sqrt{SG}$$

Where:

M_L = Maximum full scale flow rate for your liquid (lb/min).

M_W = Maximum full scale flow rate for water (lb/min).

SG = Specific gravity of the liquid at operating temperature.

No cavitation will occur at the maximum full scale flow rate (M_L) as long as the fluid viscosity exceeds 0.5 cP and there is a minimum back pressure of 22.5 PSI over the fluid vapor pressure at process temperature ($p_{min} = p_v + 22.5$ PSI).

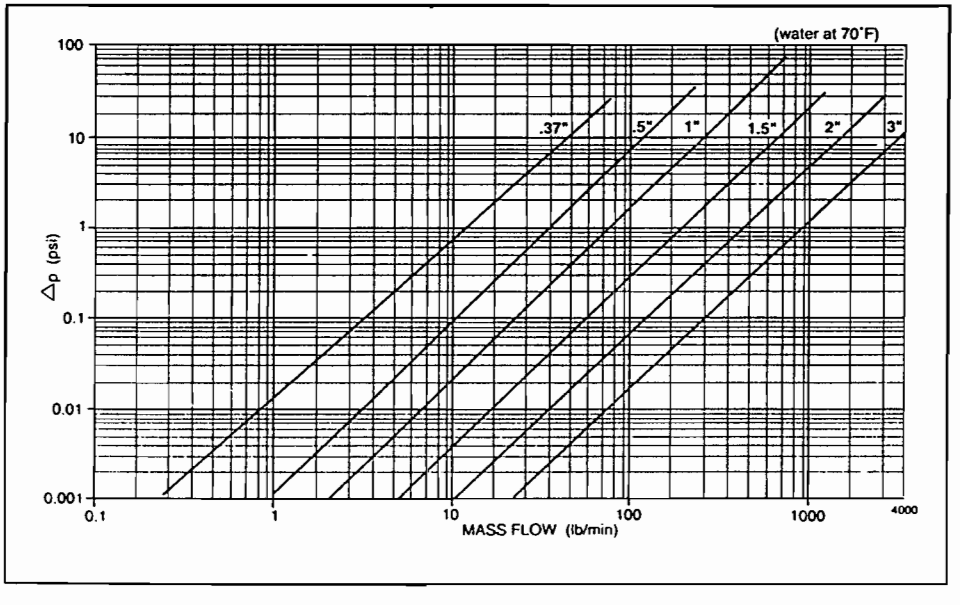

Specifications:

System

Interconnection Cable:	2–wire or 4–wire twisted pair, maximum 3300 feet (use shielded cable in high noise areas)
Accuracy	
Flow Rate:	± 0.2% of rate ± zero stability (refer to Zero Stability specification below).
Temperature:	± 2˚F
Density:	± 0.020 g/cc ± 0.002 g/cc optional, within a span of ± 0.1 g/cc and ± 45˚F
Repeatability Flow Rate:	Reading (% FS) — Repeatability 20–100 — ± 0.2% of rate 0–20 — ± 0.04% of FS
Density:	± 0.001 g/cc
Zero Stability:	0.37", ± 0.004 lb/min 0.5", ± 0.01 lb/min 1", ± 0.03 lb/min 1.5", ± 0.06 lb/min 2", ± 0.13 lb/min 3", ± 0.33 lb/min

FCO 1655 Sensor, Standard Version

Construction	
Measuring Tube:	Titanium, std. Zirconium, optional
Housing:	304 SS, NEMA 4X
Protection Rating:	FM approved non-incendive, Class I, Div. 2, Grp. A, B, C, D. Dust Ignitionproof, Class II, Div. 1, Grp. E, F, G.
Ambient Limits	
Temperature:	–13˚F to + 140˚F
Humidity:	95% RH
Power Input:	From FTO 1650 Transmitter
Process Limits	
Temperature:	–60˚F to + 302˚F
Pressure:	Per ANSI B16.5 Titanium Flanges: 150 – lb. ANSI 230 PSIG 300 – lb. ANSI 600 PSIG Refer to graphs for Tri-Clamp and PVDF flange versions (shown at right)

Sizes, Flow Rates and Weights:

SIZE	Full Scale Flow Rate (lb/min) Min	Max *	WEIGHT
0.37	3.7	73.5	17.0 lbs.
0.5"	12	165	18.7 lbs.
1"	32.5	460	26.5 lbs.
1.5"	55	735	44.1 lbs.
2"	130	1830	57.5 lbs.
3"	320	3670	99.2 lbs.

FCO 1655 Sensor, Standard Version (cont.)

End Connections Style:	150 lb. ANSI flanges, standard. 300 lb. and 600 lb. ANSI flanges, optional. Tri-clamp (non 3A approved), optional.
Material:	316L SS, standard. Titanium, PVDF optional.
Internal Seals:	Viton, standard. Kalrez optional.

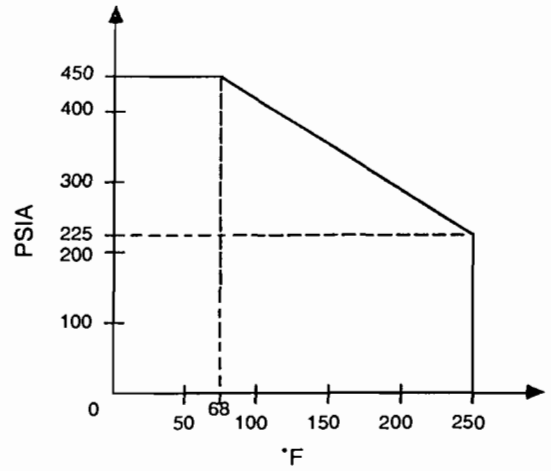

Temperature vs. Pressure for Tri-Clamp Versions

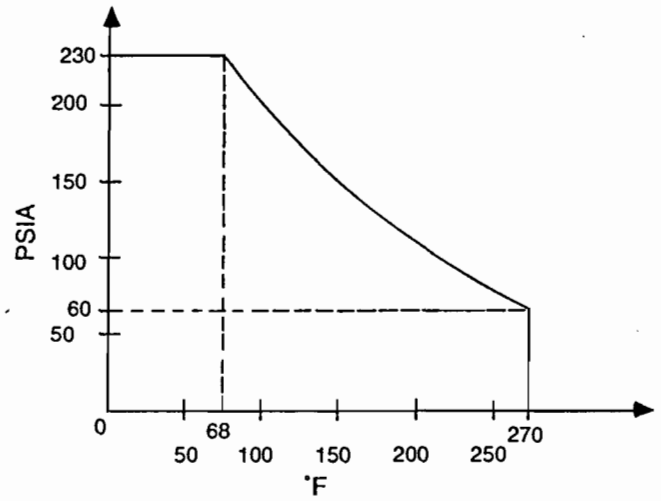

Temperature vs. Pressure for PVDF Flanges

FCO 1655 Sensor, Sanitary

Specifications are the same as the standard version sensor, except for the following:

Authorizations:	3A FDA USDA – dairy, meat and poultry
End Connections;	
Style:	Tri-clamp (3A)
Material:	316L SS Standard
Internal Seals:	Silicone

* Maximum flow rates refer to water flow. See page 3, "Size Selection" for other fluids

Specifications (cont.)

FTO 1650 Transmitter	
Housing:	NEMA 4 steel wall mount enclosure, standard. Rackmount, optional.
Protection Rating:	FM approved non-incendive, Class I, Div. 2; Grp. A, B, C, D.
Ambient Temp. Limits:	- 13°F to + 122°F (LCD display may blank out below -4°F)
Power Input:	115 / 230 VAC +10%, 15%, 50/60 Hz, ± 5%. 24 VDC optional.
Power Consumption:	11 VA
Indicator:	16-digit LCD
Output Signals Flow Rate:	4 to 20 (0 to 20) mA into 800 ohms maximum load, 0.02 to 99.99 second programmable response time. Optional frequency output, open collector, programmable; 0 – 1 kHz / 24 V, 300 µs 0 – 10 kHz / 24 V, 30 µs
Totalized Flow:	Scaled Pulse, 0.004 to 1 second programmable pulse width; 24 V peak, 150 mA maximum load, $f_{max} \leq 2$ Hz OR Open collector, maximum 40V/30 mA, $f_{max} \leq 100$ Hz
Flow Direction:	Open collector, maximum 40V/30 mA
General Alarm:	Open collector, maximum 40V/30 mA, isolated.
Density or Temperature (option):	4-20 (0-20) mA into 800 ohms maximum load for 0.1 to 6 SG or – 60°F to + 302°F: range is programmable.
Other User Programmable Features:	Full scale flow in lb/min, low flow cutoff (0.0 to 100%), scaled pulse weight, noise rejection.
Remote Zero Point Adjust. or Dual Range Option:	Activation via opto-coupler input, 3 to 30V, isolated.

NA 6670 PowerPack	
Housing:	Rackmount
Protection Rating:	Non-incendive, Class I, Div. 2, Grp. A, B, C, D (FM approval pending)
Ambient Temp. Limits:	–13 to +122°F
Power Input:	115/230 VAC +10%, –15%, 50/60 Hz, ±5%, 16–60 VDC optional
Power Consumption:	11 VA

Specifications are subject to change without notice.

Installation Guidelines

Since the M-Point is insensitive to flow profile, there are no minimum upstream and downstream straight pipe length requirements.

The M-Point sensor can be mounted at any orientation from vertical to horizontal. Vertical installation with fluid flowing up is preferred to ensure that at zero flow, suspended solids will fall through the sensor and fatty substances will rise. Vertical mounting also allows the fluid to be completely discharged from the sensor if the pipe drains during zero flow conditions, thus protecting the sensor from deposits.

If the sensor must be mounted horizontally, its electronic enclosure should be oriented above or below the sensor to avoid having entrained gases pass through only one of the two parallel flowtubes.

During a no-flow condition it is important that the oscillation of the tubes remains stable, i.e., is unaffected by disturbances in the fluid caused by the movement of the tubes themselves. This stability can easily be achieved by designing the installation such that during no-flow, there is a minimum static pressure of 3 PSIG, and the liquid to be measured is free from gas. This condition can be met by installing the sensor on the pressure side of a pump, or else by mounting it at the lowest point of an ascending pipeline with a vertical 7 ft. column (assuming SG ~ 1.0). The effect of insufficient static pressure in the system is a slightly unstable zero measurement.

Such a piping system shown above is not suitable for creating the static gauge pressure required. The effect of the rising column of liquid is cancelled out by that of the descending column.

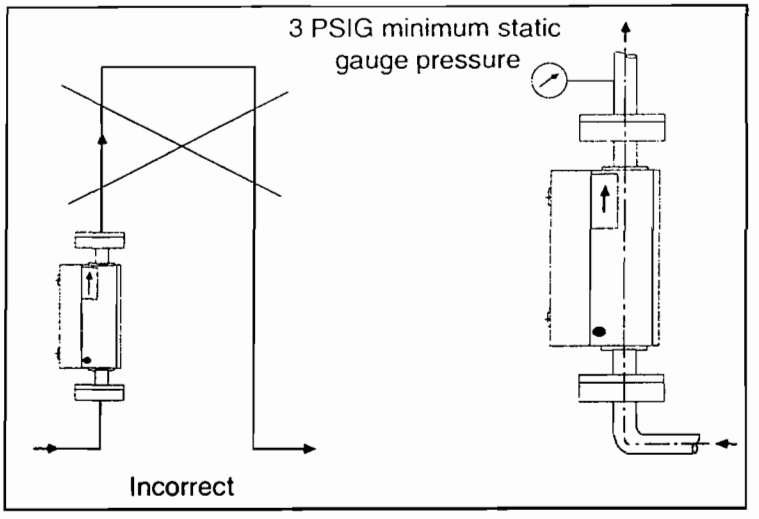

Vertical Installation

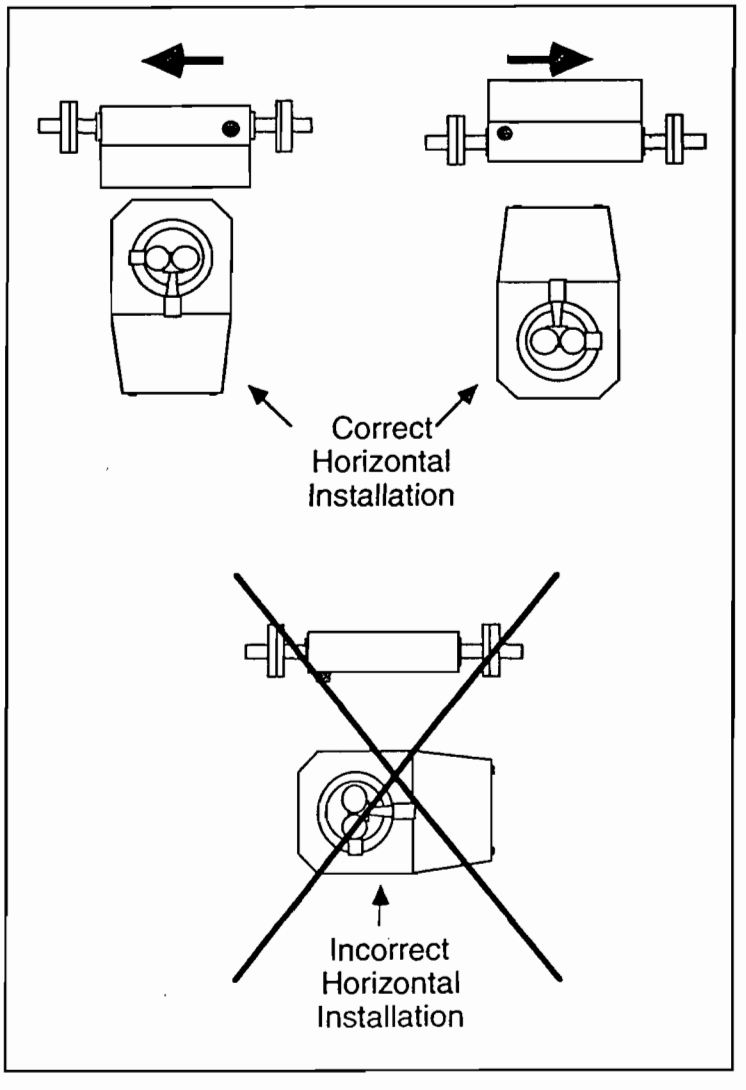

Horizontal Installation

Mounting Dimensions and Details

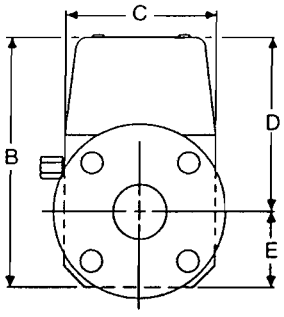

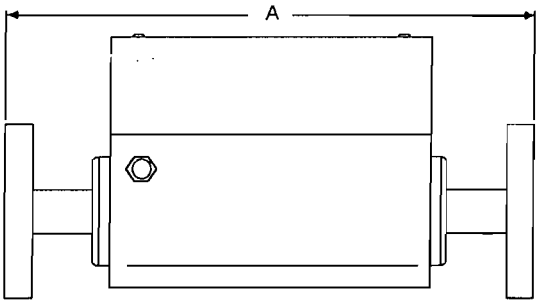

Flange version

NOMINAL SIZE		All dimensions are in inches						
		Dimension A						
in.	mm	150# / 300#	600#	Tri-Clamp	B	C	D	E
0.37	8	14.6	16.2	16.3	7.1	4.3	5.1	1.9
0.5	15	15.9	17.5	17.7	7.2	4.3	4.9	2.3
1	25	15.9	18.9	15.8	7.2	4.3	4.9	2.3
1.5	40	20.9	23.9	19.6	8.1	5.7	5.3	2.7
2	50	23.6	26.5	22.1	8.4	5.9	5.5	2.9
3	80	28.1	31.4	25.8	10.6	8.1	6.6	4.0

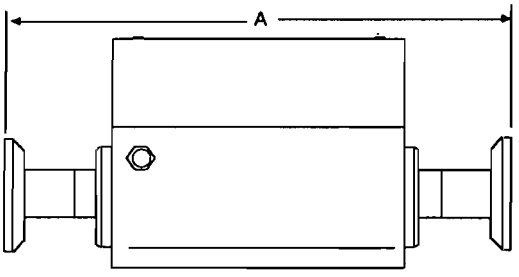

Tri-Clamp version

FCO 1655 Sensor

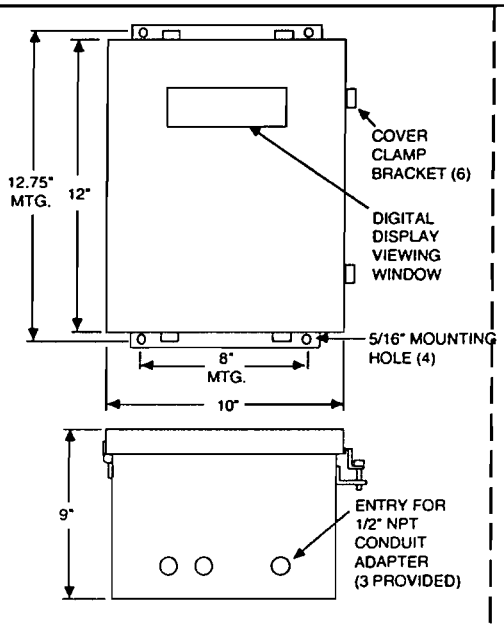

Wall Mount Version

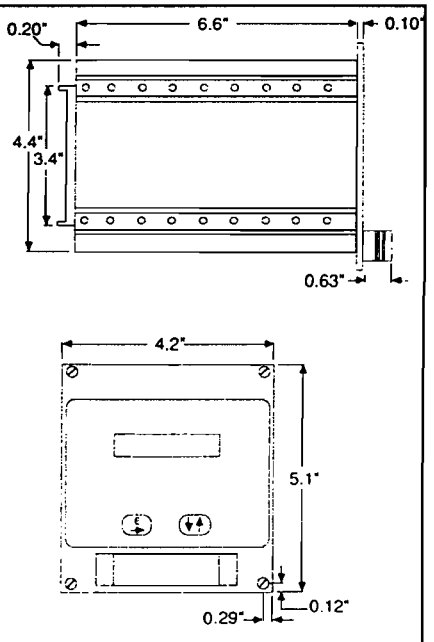

Rack Mount Version

NOTE: Dimensions for NA 6670 Power Pack are identical.

FTO 1650 Transmitter

Wiring

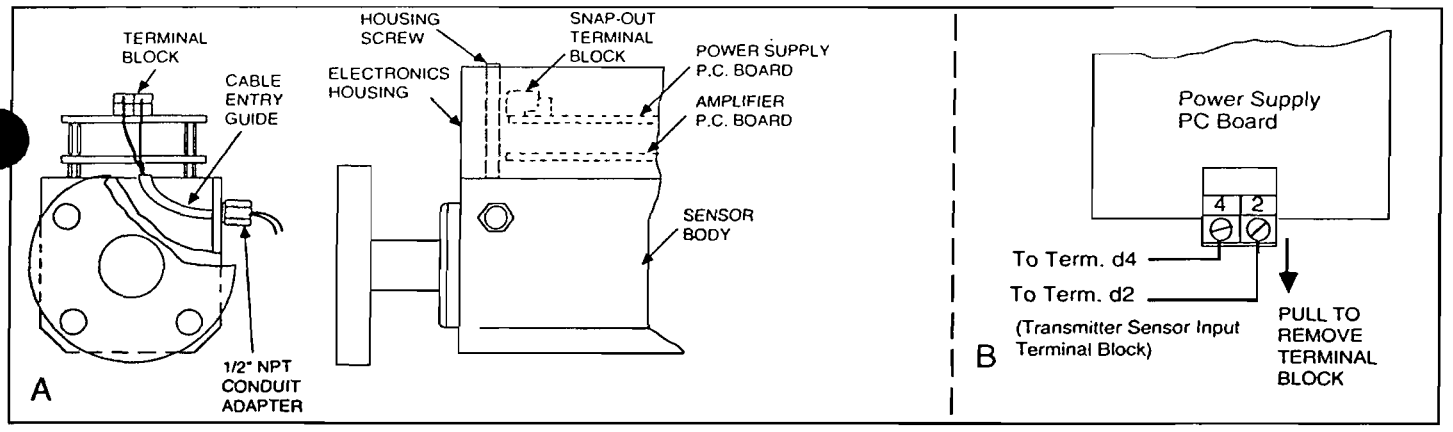

FCO 1655 Sensor

Signal wiring between the sensor and transmitter is inexpensive 2-wire or 4-wire cable, carrying a digital signal which is highly immune to interference.

Signal leads enter the sensor through a 1/2" NPT conduit connector. Simply remove the sensor enclosure cover and wire as required.

Transmitters specified in the NEMA 4 wall mount enclosure (refer to mounting dimensions, page 6) are wired according to the wall mount enclosure wiring diagram.

Three conduit entry holes are pre-drilled for installation of user-supplied 1/2" conduit fittings. Input power, signal and output wiring leads are connected to the captive barrier terminal screws per customer requirements. Current and scaled pulse outputs are wired according to the schematics below.

Cable Recommendations

Distance	Gauge
<1650 ft.	16 – 18 AWG
>1650 ft.	14 – 16 AWG

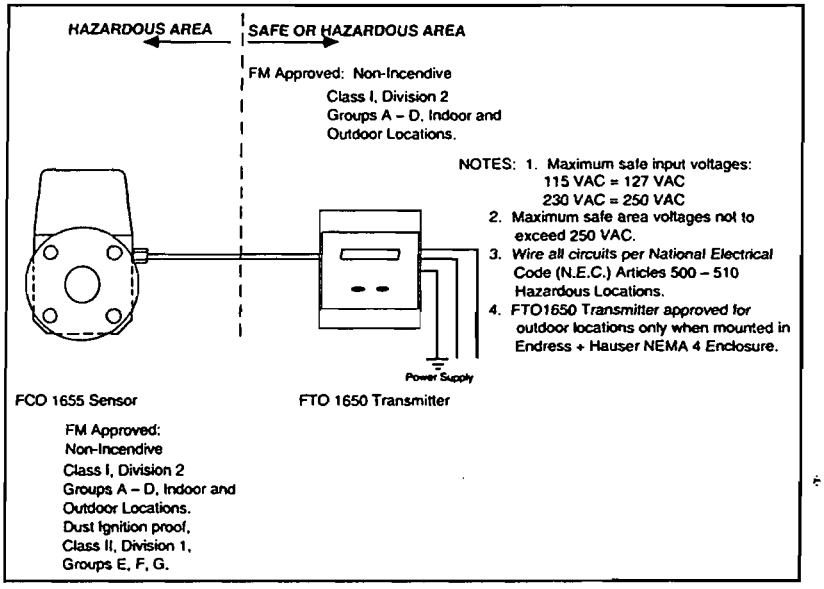

Wiring the FTO 1650 Transmitter

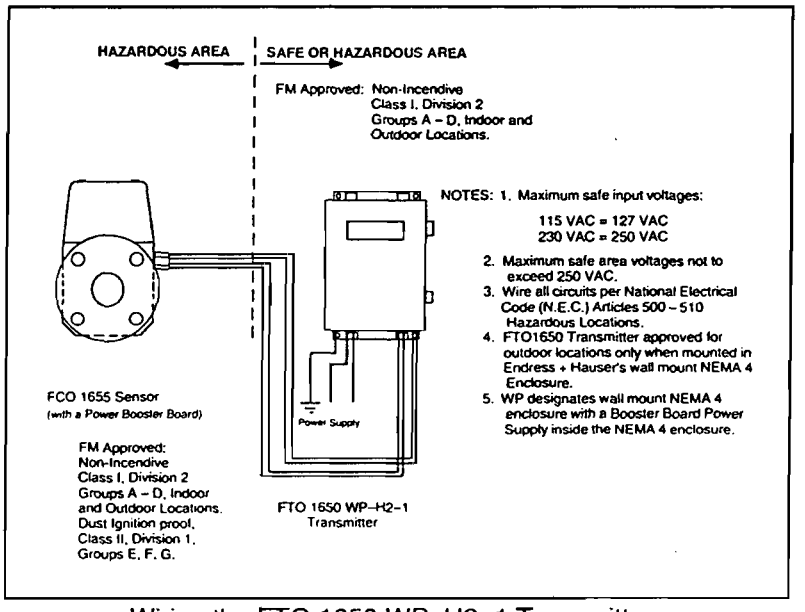

Wiring the FTO 1650 WP–H2–1 Transmitter

Booster Board

The booster board supplies the M-Point FCO 1655 with additional power for the excitation system when this measuring system is used with difficult applications where the fluid can strongly dampen the oscillation of the measuring pipes. The energy consumption increases as the size of the M-Point becomes larger. It is possible with the booster board to increase the excitation power by a factor of 10, and it can be installed in 1½" and 2" meters. The 3" model comes with the booster board installed as standard.

The booster board requires the use of an external power supply. This supply can be:

1. built into the FTO 1650 NEMA 4 enclosure;
2. the NA 6670 PowerPack; or
3. customer furnished.

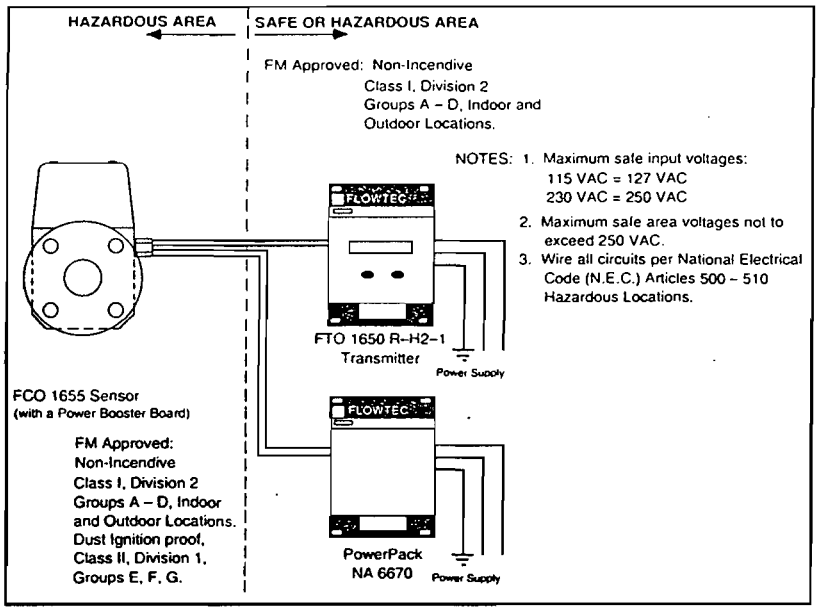

NA 6670 PowerPack

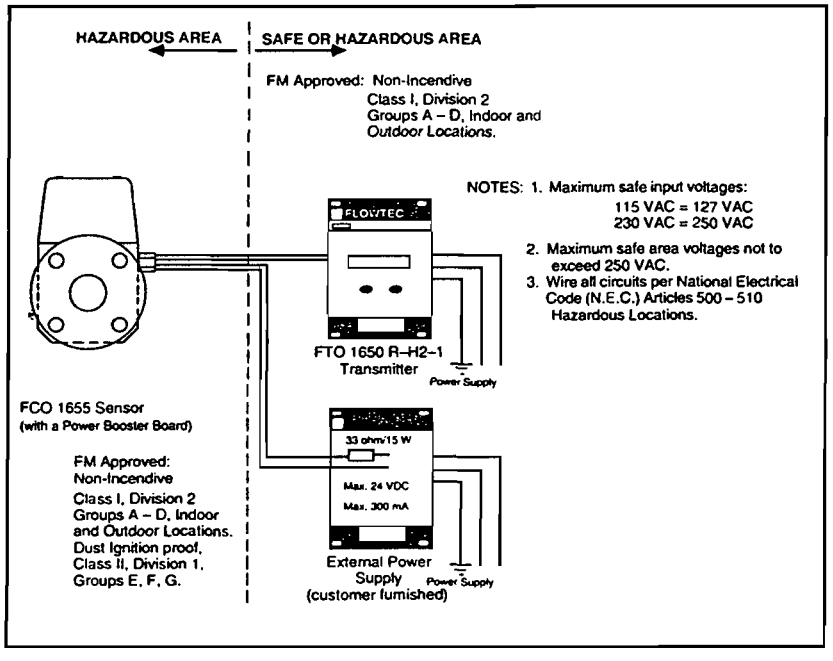

External Power Supply

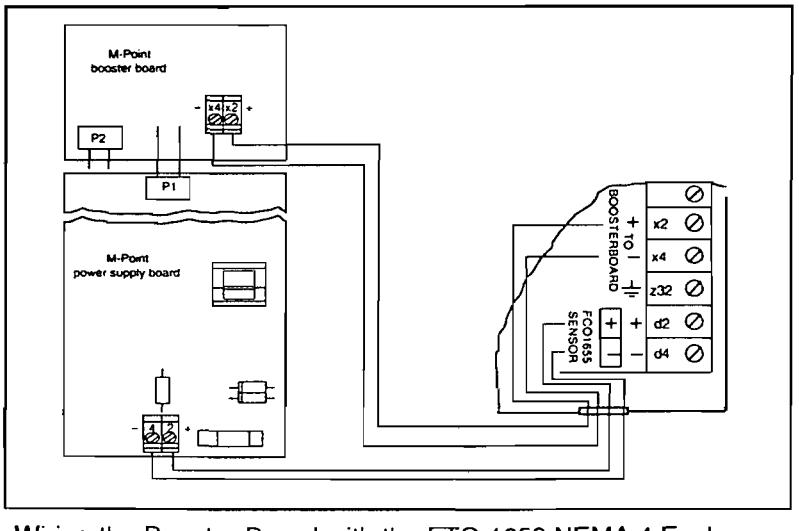

Wiring the Booster Board with the FTO 1650 NEMA 4 Enclosure

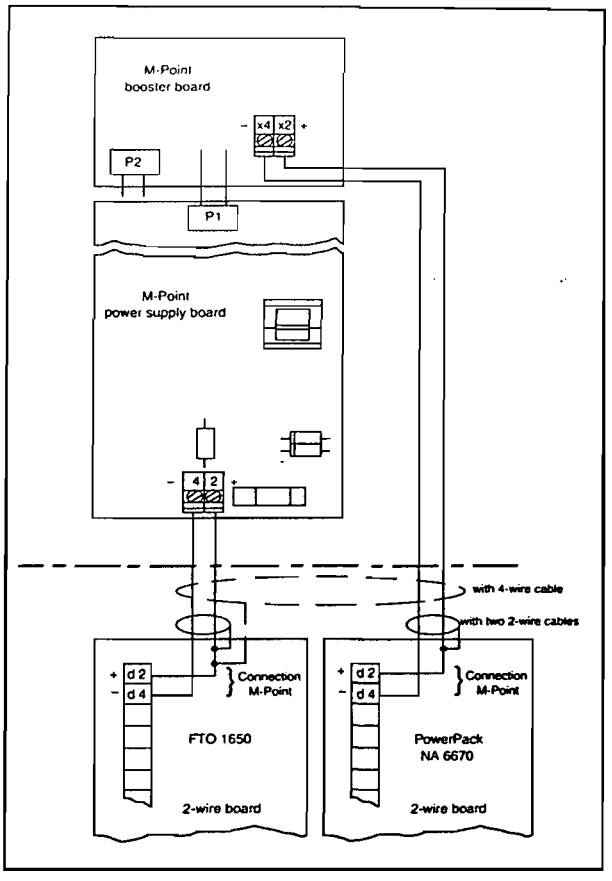

Wiring the Booster Board in the M-Point with the PowerPack

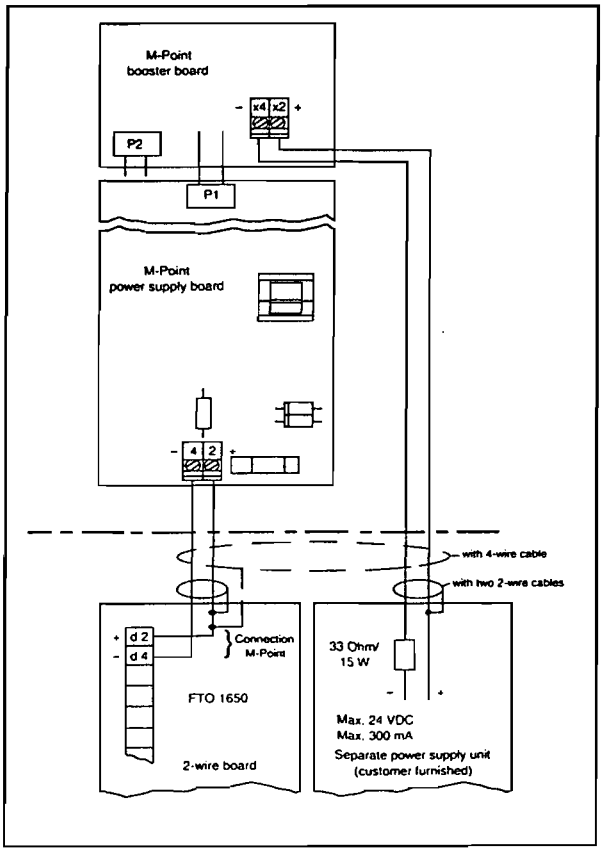

Wiring the Booster Board with a Customer Furnished Power Supply

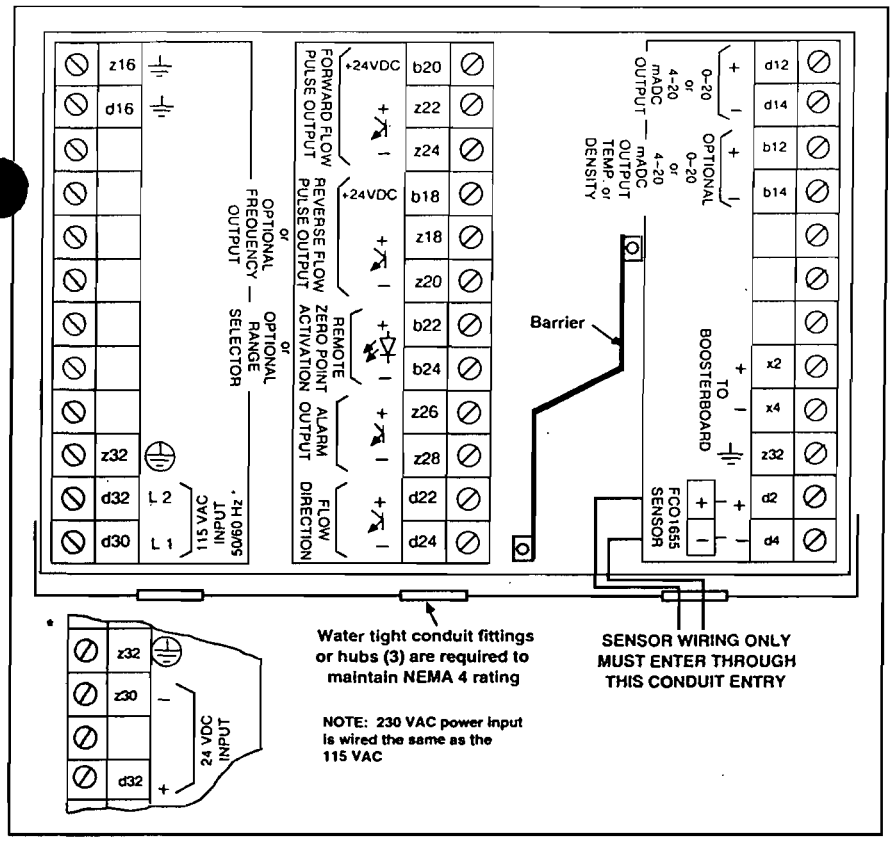

NEMA 4 Wall Mount Enclosure Wiring

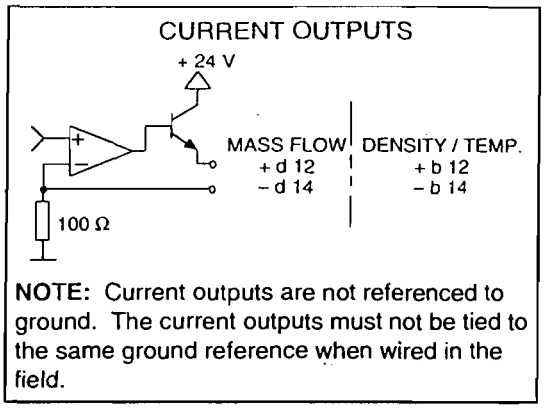

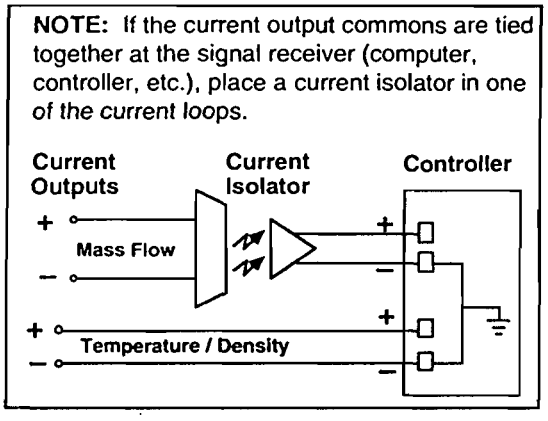

NOTE: If the transmitter is located in, or the current output cables are routed through, an area with a high level of electromagnetic noise, the noise induced on the outputs may cause the transmitter system to reset uncontrollably during operation. If so, use shielded cable for the current outputs and connect the shield to terminal # z32, # d16 or # z16 on the transmitter input power and output terminal block (input power ground).

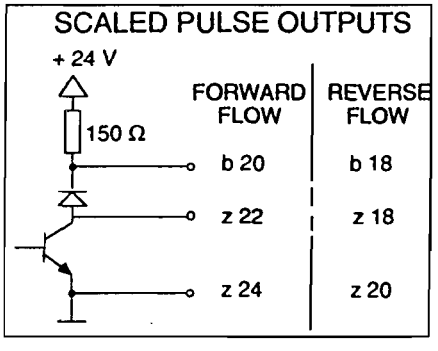

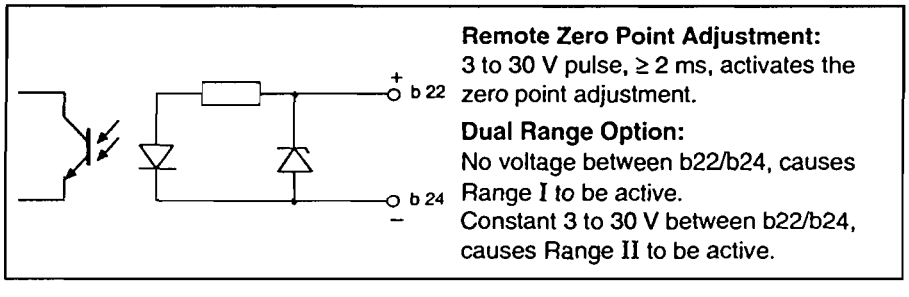

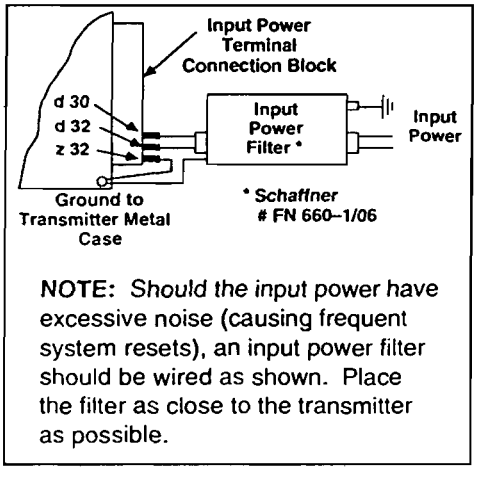

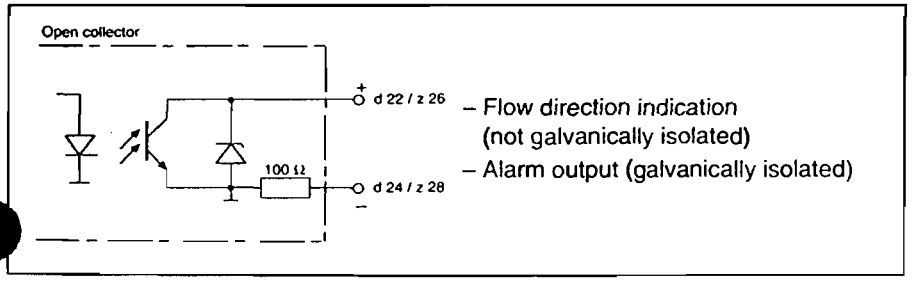

Optional Rack Mount Wiring

The optional rack mount transmitter is designed for control room mounting in a standard 19" rack. Three wiring connector versions are available: flat connectors (for 2.8 mm spade lugs), wire wrap connectors or field solder lug connectors. Connector type must be specified when ordering unit. Power input, sensor signal and outputs are wired to the transmitter plug-in connectors as required (refer to transmitter wiring diagram at right). Booster board units are wired as shown below.

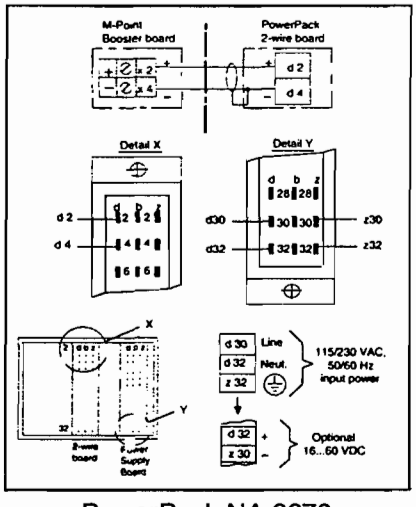

PowerPack NA 6670

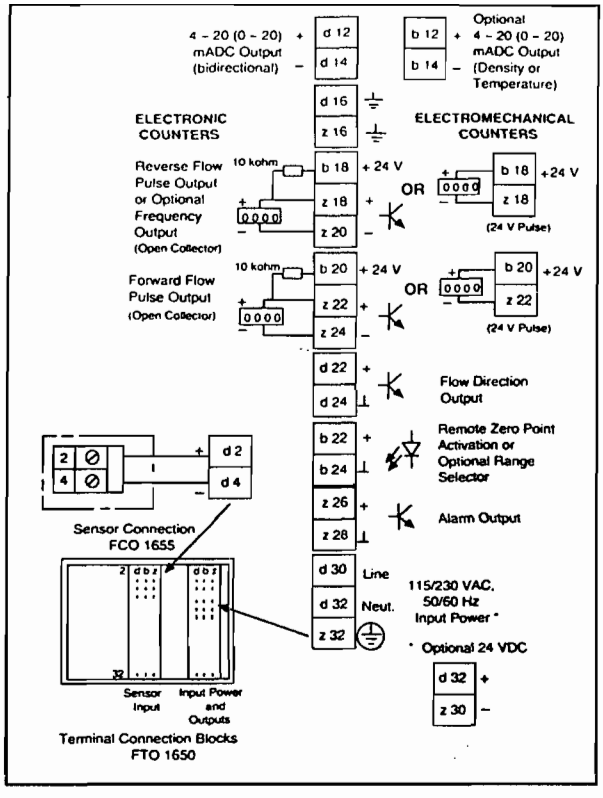

Rack Mount Version Wiring Diagram

Ordering Information

1. Construct model numbers by selecting one code from each category.
2. Specify the full scale flow rate in lb/min for 20 mA output. *
3. Specify desired pulse weight in lb/pulse for pulse output. *
4. Supply the following application information:
   a. Process fluid name, density range and viscosity range
   b. Process fluid temperature, minimum and maximum
   c. Process working pressure, minimum and maximum
   d. Percent of gas in process by volume

* Specify a second full scale flow rate and pulse weight when ordering dual range option.

FTO 1650 Transmitter

FTO 1650 — [ ] - [ ] - [H2] - [1] - [ ] - [ ]

POWER
3 – 115 VAC 50/60 Hz, std.
9 – 230 VAC 50/60 Hz
8 – 24 VDC

ENCLOSURE
W – Wall mount NEMA 4
R – Rack mount (see below for rack connectors which must be ordered separately, 2 required)
WP – Wallmount with power supply to power booster board

ELECTRICAL CLASSIFICATION
H2 – FM approved

OUTPUTS
1 – Standard outputs

DUAL RANGE OPTION
N – Option not included
R – Option included

DENSITY/TEMPERATURE OUTPUT OPTION
N – Option not included
D – Option included

Rack connectors for FTO 1650 Transmitter: PBC 078–000 [ ]

1 – Flat contacts for 2.8 mm spade lugs
2 – Wire wrap connectors
3 – Field solder lug connections

FCO 1655 Sensor

FCO 1655 — [ ] - [ ] - [H2] - [ ] - [ ]

SIZE			Full Scale lb/min	
	in	mm	min	max *
0C	0.37	8	3.7	73.5
0D	0.5	15	12	165
01	1	25	32.5	460
0F	1.5	40	55	735
02	2	50	130	1830
03	3	80	320	3670

SENSOR VERSION
00 – Standard
SA – Sanitary
ZR – Zirconium flowtubes

ELECTRICAL CLASSIFICATION
H2 – FM approved

BOOSTER BOARD
00 – Not included
01 – Included (required on 3" size)

DENSITY MEASUREMENT ACCURACY
1 – 2%
2 – 0.2%**

* Based on SG of 1.0
** Not available on 0.37" size.

NOTE: A 7037 Process Connection Set (required for each FCO 1655 Sensor specified), must be ordered. When specifying the 0C size (0.37"), order the 0D (0.5") 7037 connector size. Refer to the back page for ordering codes.

7037 Process Connection Set

Select the proper connection set for the FCO 1655 Sensor version, Standard or Sanitary.

Standard Sensor Connection Set

7037 – [ ] - [ ] - [ ] - [ ]

SIZE
0D – 0.5 inch
01 – 1 inch
0F – 1.5 inch
02 – 2 inch
03 – 3 inch

END CONNECTIONS
A1 – 150 lb. ANSI
A3 – 300 lb. ANSI
A6 – 600 lb. ANSI
T2 – Tri-clamp, non sanitary (specify "16" for Material option below)

MATERIAL
16 – 316L SS
TN – Titanium
ZR – Zirconium
PV – PVDF

SEALS
VT – Viton
KA – Kalrez

Sanitary Sensor Connection Set

7037 – [ ] - [S 2] - [16] - [S I]

SIZE
0D – 0.5 inch
01 – 1 inch
0F – 1.5 inch
02 – 2 inch
03 – 3 inch

END CONNECTIONS
S2 – Sanitary tri-clamp

MATERIAL
16 – 316L SS

SEALS
SI – Silicone

NOTE: Specify the 0D (0.5") end connection set when ordering the 0C (0.37") FCO 1655 sensor size, standard or sanitary.

Measurement and Automation
Level • Flow • Moisture • Pressure

Endress + Hauser

Endress + Hauser Instruments
2350 Endress Place
Greenwood, IN 46143
Phone: 317/535–7138
Telex: 27–2195 (Level Grwd)
Cable: LEVEL Greenwood
Telefax: 317/535–7223 or 317/535–8498
Call Toll Free: 800–428–4344

TSF1650G0292

DATA ACQUISITION AND HANDLING SYSTEM (DAHS) FOR CEMS

FEATURES

- *Real-time calculations and averages*
- *Status code for every calculated and averaged value*
- *High-resolution data storage*
- *dBASE III® compatible data files*
- *ASCII format report files*
- *Automatic and on-demand report functions*
- *PLC data input front end*
- *IBM-compatible DOS personal computer (PC)*

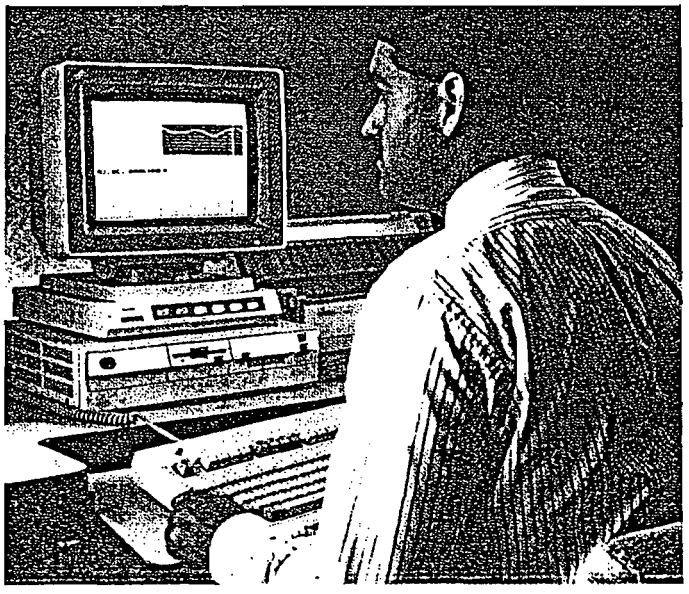

INTRODUCTION

The Rosemount Data Acquisition and Handling System (DAHS) compliments Rosemount's Continuous Emissions Monitoring Systems (CEMS), providing the user with data acquisition, analysis, and reporting capabilities. The system allows the user to easily comply with federal, state, and local regulations for continuous emissions monitoring and reporting.

The CEMS DAHS package provides the user with superior data handling and display functions. The extensive real-time and instantaneous data available in the system, coupled with operator interface capabilities, make the Rosemount CEMS DAHS more than a compliance monitoring and reporting system. The DAHS is also a valuable operations tool, providing information for avoiding excess emissions, thereby reducing out-of-compliance occurrences.

The system utilizes a PLC for front end data input and an IBM compatible 486 personal computer for data handling. The Rosemount CEMS DAHS can display analog and digital faceplates, dynamic graphics pages, and trend logs. The system continually scans for and annunciates alarm and excess emissions conditions.

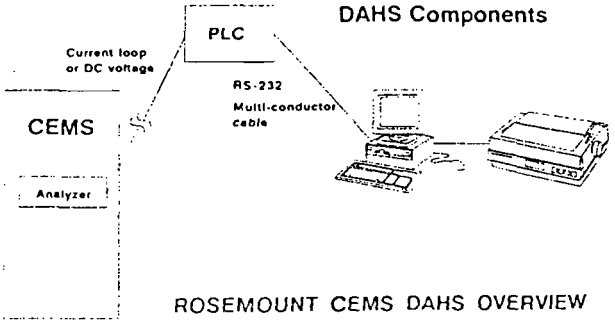

ROSEMOUNT CEMS DAHS OVERVIEW

dBASE III® is a trademark of Ashton-Tate™

ROSEMOUNT®
Measurement
Control
Analytical
Valves

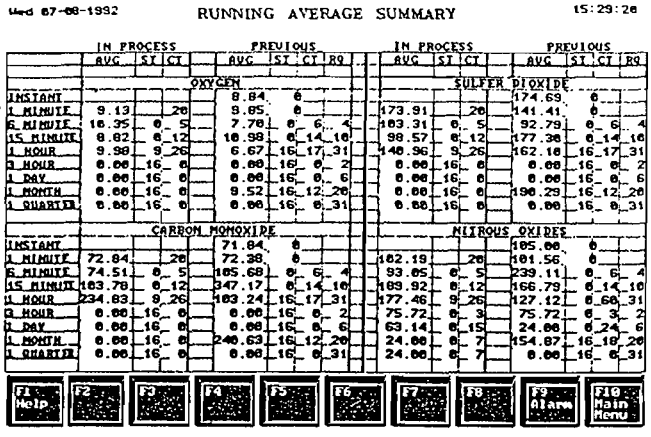

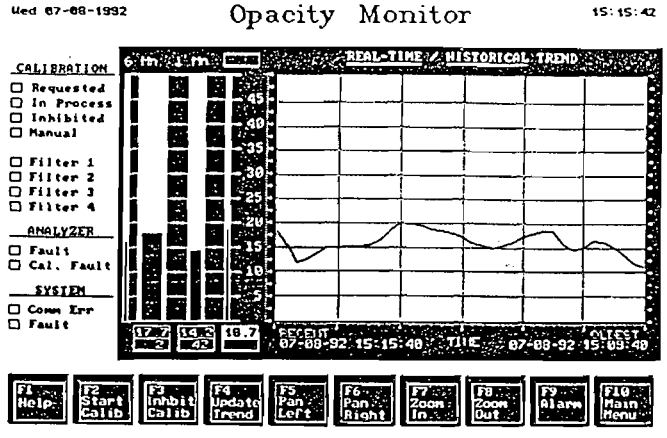

DISPLAYS

The Rosemount CEMS DAHS uses color screens to display real-time graphic and numeric representations of flue gas properties. The screens also annunciate and document alarm and excess emission conditions. Color changes occur on stripcharts, bargraphs, and numerical fields depending on the corresponding value's status code.

A standard system includes the following displays:

- Input Summary
- Averaged Input Values
- Individual Monitor Stripchart and Supervisory Control
- Alarm Logger and Control
- Last Calibration Results Overview
- Detailed Individual Calibration Results
- Emissions Source and Monitor Operating Hours and Availability
- Averaged Emissions Values
- Individual Emissions Stripchart and In-process Average Information

REPORT GENERATION

The Rosemount CEMS DAHS can generate reports to satisfy most EPA or individual requirements. Many of the reports can be invoked both automatically and manually. These reports include daily summaries, monthly summaries, the daily opacity summary, and daily and monthly calibration reports.

The Quarterly Summary, Emissions Source Operations, Monitor Operations, and all user-definable reports are invoked manually. User-definable reports include Historical Averages based on the raw data database, Calibration Results, Out-of-Control Monitor, and Excess Emissions reports.

Each report is sent to both the printer and a storage file. All report files are in ASCII format, facilitating easy editing by the operator. Finally, the DAHS has a large print spooler that allows multiple reports to be sent to the printer at one time.

DAILY SUMMARY REPORT

Report Date: 09/23/1992

Company Rosemount
Location Akron, Ohio
Source CEM
CEMS ID No. 1234567890

MONITOR	O2		CO		SO2		NO		FLOW		C CO		C SO2		C NO		CO		SO2		NO	
UNITS	%		PPM		PPM		PPM		SCFM		CPPM		CPPM		CPPM		LB/HR		LB/HR		LB/HR	
TIME/SPAN	25	IC	1000	IC	500	IC	1000	IC		IC		IC		IC		IC		IC		IC		IC
01:00	6.36	00	119	00	69.7	00	277	00	116868	00	142	00	103	00	368	00	58.1	00	77.2	00	204.6	00
02:00	2.66	00	68	00	55.5	00	198	00	91254	00	54	00	41	00	163	00	23.7	00	55.0	00	116.9	00
03:00	3.96	00	68	00	85.5	00	107	00	68831	00	59	00	73	00	88	00	25.3	00	52.3	00	55.3	00
04:00	4.85	00	86	00	191.7	00	70	00	127199	00	75	00	183	00	66	00	40.7	00	200.6	00	71.0	00
05:00	5.62	00	128	00	192.4	00	176	00	74969	00	137	00	159	00	205	00	41.6	00	146.3	00	93.0	00
06:00	7.24	00	80	00	215.6	00	91	00	64379	00	121	00	230	00	134	00	21.9	00	136.6	00	43.4	00
07:00	4.63	00	97	00	107.8	00	105	00	79700	00	85	00	89	00	92	00	31.4	00	82.2	00	64.3	00
08:00	7.94	00	56	00	105.4	00	177	12	74648	00	-19	00	73	00	215	12	19.9	00	85.6	00	73.4	12
09:00	9.37	00	77	00	49.3	00	0	12	89185	00	21	00	0	00	0	12	29.9	00	32.5	00	0.0	12
10:00	5.50	00	96	00	120.1	00	0	12	72812	00	92	00	111	00	0	12	30.6	00	92.2	00	0.0	12
11:00	3.72	00	57	00	113.4	00	0	12	68243	00	56	00	99	00	0	12	16.2	00	51.5	00	0.0	12
12:00	5.28	00	88	00	253.9	00	0	12	126222	00	96	00	247	00	0	12	43.4	00	353.7	00	0.0	12
13:00	14.11	00	74	00	111.6	00	0	12	134469	00	-788	00	405	00	0	12	40.4	00	165.4	00	0.0	12
14:00	9.63	00	53	00	90.6	00	77	00	74079	00	100	00	150	00	98	00	15.7	00	63.0	00	42.8	00
15:00	4.11	16	148	16	147.6	16	76	16	151244	16	59	18	85	16	34	16	96.6	16	226.2	16	89.2	16
16:00	16.99	00	62	00	135.1	00	33	00	103344	00	1030	00	2380	00	776	00	28.0	00	128.4	00	27.8	00
17:00	11.20	10	46	10	226.8	10	82	10	73518	10	68	10	327	10	120	10	14.5	10	172.3	10	41.1	10
18:00	9.96	00	147	00	105.8	00	145	00	67017	00	189	00	167	00	189	00	35.6	00	62.5	00	57.5	00
19:00	6.85	00	83	00	121.4	00	78	00	106248	00	94	00	144	00	86	00	40.3	00	134.3	00	59.5	00
20:00	6.25	00	71	00	111.9	00	70	00	89332	00	71	00	105	00	76	00	28.0	00	95.3	00	51.3	00
21:00	5.16	00	87	00	79.2	00	25	00	74282	00	87	00	78	00	31	00	23.8	00	60.1	00	13.5	00
22:00	6.91	00	103	00	199.3	00	80	00	60701	00	138	00	248	00	116	00	27.5	00	97.4	00	32.1	00
23:00	6.68	00	53	00	82.1	00	74	00	78662	00	57	00	94	00	76	00	17.2	00	78.9	00	39.5	00
00:00	18.10	00	162	00	223.6	00	204	00	64686	00	-515	00	-1040	00	-259	00	40.5	00	127.5	00	102.9	00
MAXIMUM	18.10		162		253.9		277		134469		1030		2380		776		58.1		353.7		204.6	
TIME	00:00		00:00		12:00		01:00		13:00		16:00		16:00		16:00		01:00		12:00		01:00	
AVERAGE	7.71	00	87	00	128.2	00	113	00	86688	00	63	00	188	00	144	00	30.9	00	109.0	00	67.2	00
TOTAL									1907131								679.6		2398.5		1075.4	
ZERO ERR	-0.01		0.00		0.00		0.00															
SPAN ERR	-0.01		-0.02		-0.02		0.00															
ZERO R2			0.00				0.00															
SPAN R2			-0.02				0.00															
CAL TIME	05:09		06:11		13:20		13:14															
TIME R2			06:11				13:14															
DLY AVL	95.65		95.65		95.65		69.57		95.65		95.65		95.65		69.57		95.65		95.65		69.57	
365 AVL	96.67		96.67		96.67		76.67		96.67		96.67		96.67		76.67		96.67		96.67		76.67	

Date Printed: Thu 09-24-1992 10:15:47

MENUS

The main menu displays four rows of function keys. Each key is labeled with a description of the function associated with the key. Pressing a key results in the display of the chosen screen. Through this menu, the user has access to all of the displays and features of the system.

Every screen has a row of function keys similar to those on the main menu. These keys provide access to specific features for the current screen, other display screens, global system features, or the main menu. Consistency of key features has been maintained where possible, resulting in easy familiarization and comfortable navigation through the system.

SCREEN EDITORS

The system provides screen editor functions for the manual input of operations data and also for the changing of supervisory control parameters.

A standard system includes the following screen editors:

- Excess Emissions Reason Codes
- Emissions Source Downtime Reason Codes
- Emissions Source Downtime Schedule
- Calibration Parameters
- PLC Supervisory Control Parameters

ALARMS

The Rosemount CEMS DAHS will provide audible and/or visual alarms that can be acknowledged for the following conditions:

- DAHS Fault (Communications Link Failure)
- Analyzer Faults
- Analyzer Calibration Failures
- Emissions Limit Approach Warnings
- Emissions Limit Exceeded Alarm
- Sampling, Handling, and Conditioning Faults, such as
  - Extraction Probe Temperature Low
  - Sample Line Temperature Low
  - Condensate Level High
  - Moisture in Sample

INPUT VALUE CALIBRATION ERROR CORRECTION

All input values are automatically corrected based on calibration results. This calibration error correction is a linear adjustment of the input signal based on the difference between measured test gas values and expected test gas values. The correction is automatic and continuous, with one exception. It does not occur during calibration sequences.

AUTO CALIBRATION

All analyzer calibration sequences are controlled by the PLC. They can be initiated automatically (by the PLC) based on a pre-set time-of-day or manually by request from the data handling computer (relayed to the PLC). Calibration sequences can be inhibited on request from the data handling computer. While the inhibit request is in effect, neither automatic nor manual calibration sequences will run.

At any time, the user may specify or modify the pre-set automatic calibration times through the data handling computer. Modified times are immediately down-loaded to the PLC by the computer and will be in effect for the next calibration sequence.

CALIBRATION LOG

The Rosemount CEMS DAHS monitors all calibration sequences, calculates error percentages, and records results. The PLC is directed to flag the status code of the input of any analyzer that fails a calibration error test. Calibration results that are recorded by the DAHS are the calibration date and start/end times, individual test gas measured values and start/end times, calculated calibration errors for each test gas, and analyzer calibration status.

HIGH RESOLUTION/ACCURACY

The data input front-end PLC has 12 bits of resolution in the A/D conversion of monitored signals, providing an accuracy of 0.025% of full scale input. All data inputs are scanned at least once per second. Instantaneous values are sent to the data handling PC every second.

Averaged values for each monitored input are collected from the PLC every minute. These raw values, along with their corresponding status codes, are immediately stored in a database file on the PC hard drive. The PC's hard drive capacity allows for on-line storage and retrieval of several quarters of this raw data.

AVERAGING

The system's data handling computer maintains an extensive set of real-time averages for each monitored system parameter. This set includes twenty different averages of three different types (running, rolling, and in-process). Running and in-process averages are calculated over seven different time spans, while rolling averages are calculated for six period lengths. Typical time spans are 1 quarter, 1 month, 1 day , 3 hour, 1 hour, 1/2 hour, and 6 minutes. The time spans may be changed or tailored to meet individual application requirements.

The real-time rolling and in-process block averages provide instantaneous emissions data. An operator can then make process adjustments to avoid out-of-compliance incidents before they occur.

Best Available Copy

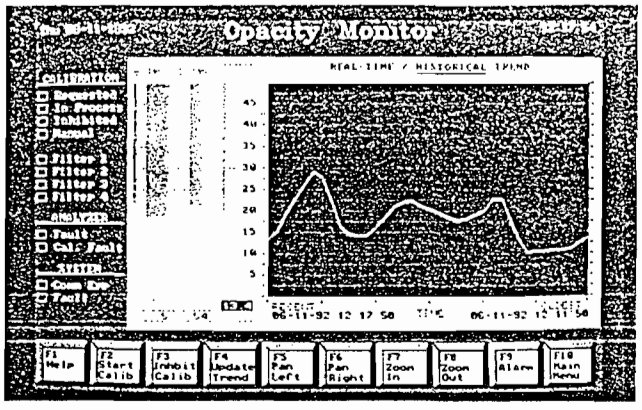

Individual **Monitor** *displays provide detailed information on one component. The stripchart can be used to display historical data as well as real-time values. The dynamic bargraphs allow the user to monitor an in-process emission average as it develops.*

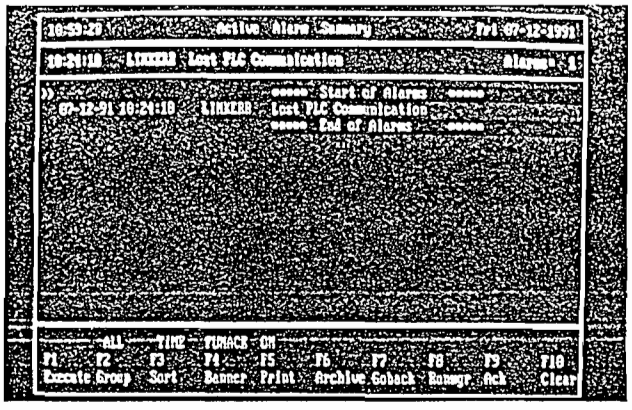

The **Active Alarm Summary** *lists the current alarms and their status. It allows for grouping, sorting, and acknowledgment of the alarms. Alarms include emissions limit approach warnings, exceedence alarms, CEMS and analyzer faults, and calibration errors.*

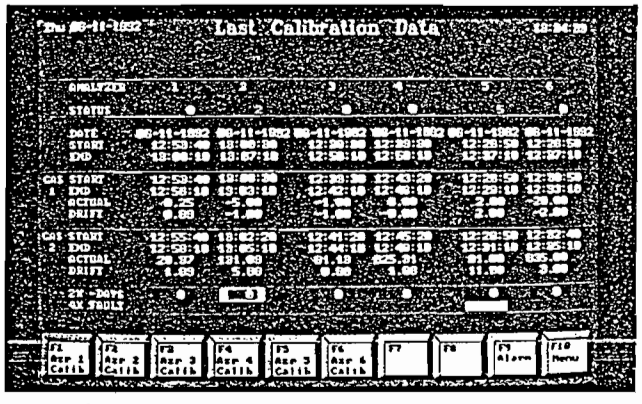

The **Last Calibration Data** *display shows the most recent calibration results for each monitored instrument. Information includes dates and times, test gas readings, calculated zero and span calibration errors, and calibration status.*

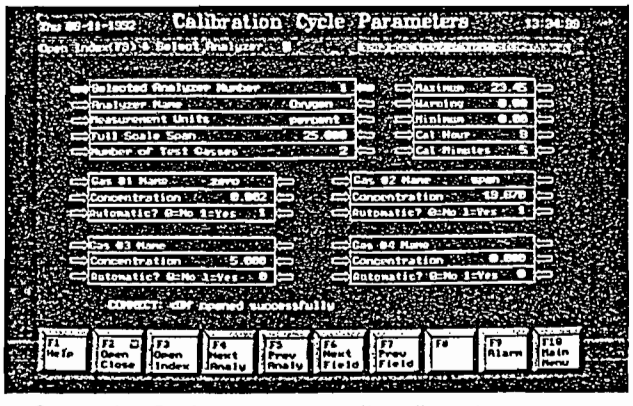

The **Calibration Cycle Parameters** *editor allows the user to change individual monitor names, units, instrument span, and automatic calibration start time. It also provides for the editing of up to 4 test gas names and concentration values, for each monitor.*

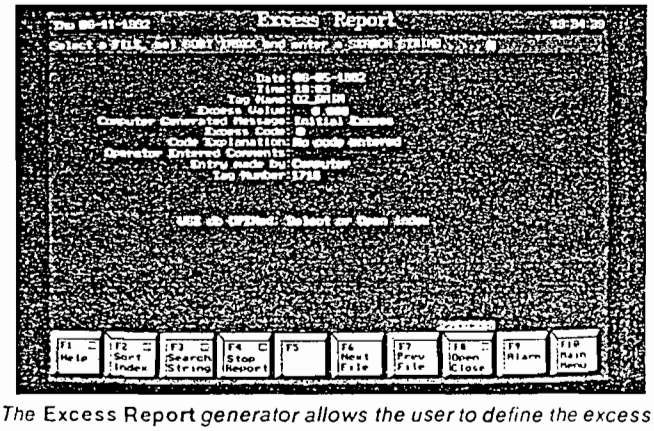

The **Excess Report** *generator allows the user to define the excess report. Editable parameters include report sort order (date, time, tag, reason code) and search strings.*

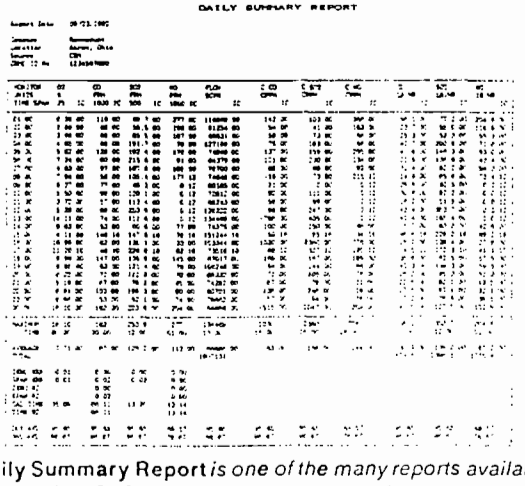

The **Daily Summary Report** *is one of the many reports available through the DAHS. Excess emissions, calibration results, and other emissions summary reports are also available automatically and/or on-demand.*

Recycled Paper

DATA ACQUISITION AND HANDLING SYSTEM (DAHS) FOR CEMS

The Rosemount Data Acquisition and Handling System (DAHS) compliments Rosemount's Continuous Emissions Monitoring Systems (CEMS) by providing the user with data acquisition, analysis, and reporting capabilities. The system allows the user to easily comply with federal, state, and local regulations for continuous emissions monitoring and reporting.

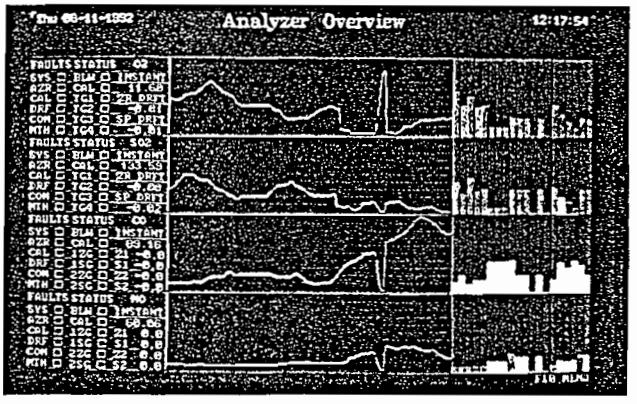

The **Analyzer Overview** *provides emissions and CEMS status at a glance. Specific monitor status information, real-time stripcharts, and dynamic rolling average bargraphs are shown for multiple instruments.*

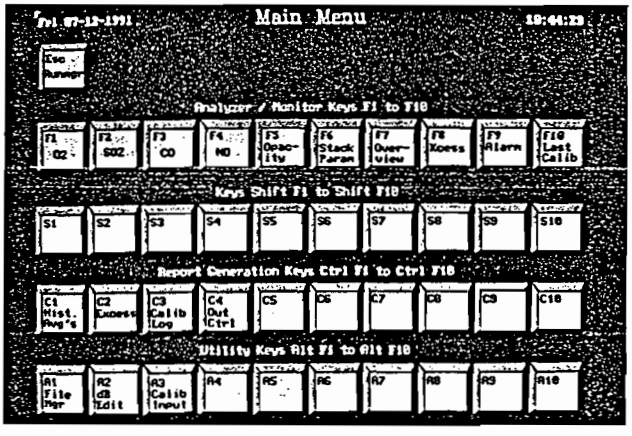

The **Main Menu** *displays four rows of function keys. Each key is labeled with a description of the function associated with the key. Pressing a key results in the display of the chosen screen. Through this menu, the user has access to all of the displays and features of the system.*

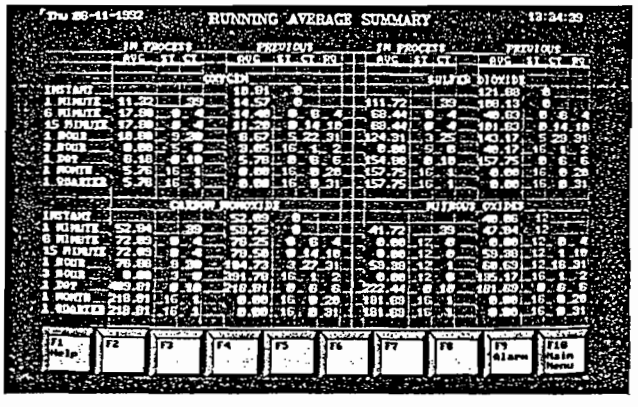

The **Running Average Summary** *lists all real-time previous and in-process block averages for up to 4 monitored values. There are 7 different block spans, from 6 minutes to 1 quarter, as well as instantaneous and 1 minute average data. The status code and good count for each averaged value is also shown.*

The Rosemount CEMS DAHS uses dynamic color graphics extensively. Display objects are linked to monitored values and can change size or color based on numerical quantity or status. The dynamic displays, coupled with real-time information, make the DAHS a valuable operations tool as well as a data collection and reporting system.

ROSEMOUNT®

ATTACHMENT 9

MATERIAL (LBM) ANALYSIS PLAN

Section 6

Waste Characteristics & Waste Analysis Plan

Section 6.1 describes the chemical and physical analysis as well as the hazardous characteristics of the waste stored, blended and processed at Oldover Corporation. The Waste Analysis Plan for sampling, testing and evaluating wastes received and processed at the facility is contained in 6.2. The Waste Analysis Plan is designed to gather sufficient information about the waste to assure safe handling and processing of hazardous waste and to comply with RCRA regulations of 40 CFR Part 264.

6.1 General Properties of Waste

6.1.1 General Description of Waste

Oldover Corporation uses industrial wastes including but not limited to paints, lacquers, thinners, waste petroleum products, petroleum by-products, inks, resins, adhesives, petroleum distillates, waste solvents (halogenated and non-halogenated), organic chemicals and by-products, various alcohols and waste contaminated materials and residues in its waste storage, blending and processing facility. Some waste materials are delivered to the facility in bulk tanker trucks or rail cars and either processed, blended and/or stored in tanks on-site or processed and shipped off-site to an approved facility. Other wastes may be obtained from Florida Solite, an interim status Boiler and Industrial Furnace (BIF) facility with storage capabilities whose property is adjacent to the Oldover Corporation property. Blended waste, also called Liquid Burnable Material (LBM), is delivered to the Florida Solite facility from Oldover via direct pipelines to the kilns.

6.1.1 General Description of Waste (continued)

Most, but not all, of the wastes handled at the Oldover Corporation facility are designated as characteristic and/or listed as hazardous by U.S. EPA and the State of Florida. Most are ignitable and some are designated as toxic. However, Oldover also occasionally receives non-hazardous material.

6.1.2 Hazardous Characteristics

Hazardous wastes listed by the U.S. Environmental Protection Agency under its regulations at 40 CFR Part 261 and wastes exhibiting hazardous characteristics also described in those regulations may be accepted at Oldover Corporation depending on their suitability for the facility's operation and compatibility with materials with which they will be stored, blended or processed. The wastes accepted by Oldover are listed in Exhibit I-1 of Part I of this application and are identified by E.P.A. Hazardous Waste Code and associated hazard. Wastes exhibiting the characteristics of corrosivity (D002) or reactivity (D003) are not accepted. Oldover Corporation does not accept listed dioxin and furan wastes, i.e., waste codes F020-F023 and F026-F027. PCB wastes as defined under the Toxic Substances Control Act are not accepted.

6.1.3 Basis for Hazard Designation

The typical components of hazardous waste used at Oldover Corporation are spent solvents or other industrial wastes which are characteristic or listed wastes because of ignitability and/or toxicity.

These wastes often are further described by one or more toxicity characteristics. Many industrial wastes and

6.1.3 Basis for Hazard Designation (continued)

waste petroleum products may contain significant heat value (BTU's) but are not listed wastes for ignitability nor do they display the characteristic of ignitability. Such wastes may contain sufficient concentrations of certain metals or organic components to exhibit the characteristic of toxicity. Oldover Corporation may accept for storage, blending and processing any of these wastes. The determination of whether a waste is suitable for Oldover's use is primarily dependent on the wastes physical and chemical parameters, such as BTU content.

6.1.4 Laboratory Documentation

New waste streams undergo an initial pre-qualification review of waste information and analytical data. The laboratory data may be provided by the supplier or generated by Oldover Corporation. Alternate laboratories with a Department approved Comprehensive Quality Assurance Plan may also be used.

Upon successful pre-qualification review, samples of all waste shipments delivered to the Oldover facility are analyzed and shipping papers and/or manifests are reviewed before shipment acceptance. Any discrepancies of waste identification and composition are resolved with the generator or the waste is not accepted. Analysis of samples collected from incoming trucks or rail cars for acceptance at Oldover are generally performed in laboratories at the facility. If the facility is unable to analyze a sample in a timely manner, an alternate laboratory may be utilized. Section 6.2 provides greater detail on the pre-qualification and shipment acceptance procedures. Exhibit 6-1 shows the results of typical analysis performed on a waste stream in the pre-qualification and shipment acceptance procedures.

6.2 Waste Analysis Plan

The waste analysis plan sets out the criteria, rationale and procedures that will be followed at Oldover Corporation for the sampling, analysis and evaluation of wastes received, stored in tanks, blended and processed at the facility. It outlines the procedures and analytical methods used to obtain the chemical and physical data on the wastes in order to evaluate them for safe storage and handling by the facility.

6.2.1 Waste Qualification Protocol (Parameters and Rationale)

6.2.1.1 Pre-qualification Procedures and Analysis

Every waste stream will be evaluated by Oldover Corporation prior to consignment of the waste to Oldover for management. In order for a new waste stream to be considered for management by Oldover, the waste generator is required to submit a completed Generator's Waste Profile Sheet along with a sample of the waste stream. The generator may also supply laboratory documentation with the sample. Additionally, a Toxicity Characteristic Certification form may be required. Examples of these documents are shown in Figures 6-1 and 6-2. Note, non-substantive changes to these exemplary documents may be made so long as all required information is contained in the documents and prior approval is obtained from the Department. Based on the information contained on the Profile Sheet, Oldover will evaluate whether of not the waste can be managed on-site.

As a part of this pre-qualification procedure, samples from the generator are required to be analyzed and the results are compared to the waste

OLDOVER CORPORATION

FIGURE 1
(Revision 2)

Mailing Address:
P.O. Box 228
Ashland, VA 23005

Shipping Address:
Rt. 8, Box 1325
Ashland, VA 23005

WASTE MATERIAL PROFILE FORM

PROFILE NO. _____

A. GENERAL INFORMATION

GENERATOR _____ TRANSPORTER _____
FACILITY ADDRESS _____ GENERATOR USEPA ID NO. _____
_____ GENERATOR STATE ID NO. _____
_____ PHONE NO. _____
TECHNICAL CONTACT _____ TITLE _____
NAME OF WASTE _____
PROCESS GENERATING WASTE _____

B. PHYSICAL CHARACTERISTICS OF WASTE

PHYSICAL STATE @ 70° F: ___Liquid ___Semi-Solid ___Solid
ODOR: ___None ___Mild ___Strong Describe _____
FLASH POINT: ___<100° F ___101° F-139° F ___140° F-200° F
___> 200° F ___No Flash Value _____
BTU RANGE: _____ /lb. _____ /gal.
SPECIFIC GRAVITY: ___<.8 ___.8-1.0 ___>1.0 Exact _____
SOLIDS RANGE: _____ %

LAYERS: ___Single-Phased ___Bi-layered ___Multilayered
COLOR: _____
pH RANGE: ___> 2-5 ___> 5-9 ___>9- <12.5
UNBURNABLE RESIDUE RANGE: _____ %
WATER CONTENT RANGE: _____ % Dissolved
_____ % Free Layer
VISCOSITY RANGE: _____ Centipoises

C. CHEMICAL COMPOSITION

	RANGE
_____	_____ %
_____	_____ %
_____	_____ %
_____	_____ %
_____	_____ %
_____	_____ %
_____	_____ %
_____	_____ %
_____	_____ %
_____	_____ %

D. METALS

		___TOTAL (ppm)	___TCLP (ppm)	
ANTIMONY (SB)	>	10.0	___No ___Yes	CONC. RANGE _____
ARSENIC (AS)	>	5.0	___No ___Yes	CONC. RANGE _____
BARIUM (BA)	>	100.0	___No ___Yes	CONC. RANGE _____
BERYLLIUM (BE)	>	1.0	___No ___Yes	CONC. RANGE _____
CADMIUM (CD)	>	1.0	___No ___Yes	CONC. RANGE _____
CHROMIUM (CR)	>	5.0	___No ___Yes	CONC. RANGE _____
LEAD (PB)	>	5.0	___No ___Yes	CONC. RANGE _____
MERCURY (HG)	>	0.2	___No ___Yes	CONC. RANGE _____
NICKEL (NI)	>	5.0	___No ___Yes	CONC. RANGE _____
SELENIUM (SE)	>	1.0	___No ___Yes	CONC. RANGE _____
SILVER (AG)	>	5.0	___No ___Yes	CONC. RANGE _____
THALLIUM (TL)	>	10.0	___No ___Yes	CONC. RANGE _____

E. OTHER COMPONENTS - TOTAL (ppm)

SULFUR _____ PCB'S _____ HALOGENS _____

F. HAZARDOUS CHARACTERISTICS

REACTIVITY: ___None ___Water Reactive ___Shock Sensitive
___Pyrophoric ___Explosive ___Sulfides: _____
___Cyanides: _____ ___Other: _____
OTHER HAZARDOUS CHARACTERISTICS: ___Ignitable
___Corrosive ___TCLP Wastes ___Other: _____
USEPA HAZARDOUS WASTE? _____Yes _____No
USEPA HAZARDOUS WASTE CODE(S): _____
_____
STATE HAZARDOUS WASTE? _____Yes _____No
STATE HAZARDOUS WASTE CODE(S): _____

G. SHIPPING INFORMATION

DOT HAZARDOUS MATERIAL? _____Yes _____No
PROPER SHIPPING NAME _____
HAZARD CLASS _____ ID NO. _____
PACKAGING GROUP___ EMERGENCY RESPONSE GUIDE NO. _____
PRIMARY CONSTITUENTS CONTRIBUTING TO HAZARD:
_____ _____
24 HR. EMERGENCY PHONE NO. _____
METHOD OF SHIPMENT: ___Bulk ___Drums [Type/Size _____]
ESTIMATED VOLUME: _____ Gal/Drums/Tons per _____

H. SPECIAL HANDLING OR INCOMPATIBILITIES

_____

IS THIS WASTE SUBJECT TO BENZENE WASTE NESHAP? ___Yes ___No

___Additional Pages Attached

GENERATOR CERTIFICATION

I hereby certify that all information in this and all attached documents is true and accurate, and that all known or suspected hazards have been disclosed. I certify that there are no hazardous constituents or characteristics except as described above, and if the waste stream or process generating the waste changes, I will notify Oldover prior to shipment of the waste.

_____ _____
Signature Title

_____ _____
Printed/Typed Name Date

TC Rule Certification / Recertification Form

Generator Name: _____ EPA ID#: _____

Location: _____

Waste Description: (same as profile sheet) _____

CHARACTERISTICS OF HAZARDOUS WASTE: Indicate if this waste contains any of the following characteristics based on criteria mandated by 40 CFR 261.21, 261.22, 261.23 and 261.24.

		Regulatory Threshold Level	(Check One) Yes	No	(Check One) Scientific Data	Generator's Knowledge	Actual Value
D001	Characteristic of Ignitability	< 140°F					°F
D002	Characteristic of Corrosivity	≤ 2 or ≥ 12.5					pH
D003	Characteristic of Reactivity						

Constituent		*Regulatory Threshold Level, ppm	(Check One) Yes	No	(Check One) Scientific Data	Generator's Knowledge	Actual Value (ppm)
.004	(Arsenic)	5.0					
D005	(Barium)	100.0					
D006	(Cadmium)	1.0					
D007	(Chromium)	5.0					
D008	(Lead)	5.0					
D009	(Mercury)	0.2					
D010	(Selenium)	1.0					
D011	(Silver)	5.0					
D012	Edrin	0.02					
D013	Lindane	0.4					
D014	Methoxychlor	10.0					
D015	Toxaphene	0.5					
D016	2,4-D (2,4-Dichloro-phenoxyacetic acid.)	10.0					
D017	2,4,5-TP Silvex	1.0					
D018	Benzene	0.5					
D019	Carbon Tetrachloride	0.5					
D020	Chlordane	0.03					
D021	Chlorobenzene	100.0					
D022	Chloroform	6.0					
D023	o-Cresol	200.0					
D024	m-Cresol	200.0					
D025	p-Cresol	200.0					

- Continued -

FIGURE 6-2

BEST AVAILABLE COPY

Constituent	*Regulatory Threshold Level, ppm	(Check One) Yes	No	(Check One) Scientific Data	Generator's Knowledge	Actual Value
26 Cresol	200.0					
27 1,4-Dichlorobenzene	7.5					
D028 1,2-Dichlorobenzene	0.5					
D029 1,1-Dichloroethylene	0.7					
D030 2,4-Dinitrotoluene	0.13					
D031 Heptachlor (and its hydroxide)	0.008					
D032 Hexachlorobenzene	0.13					
D033 Hexachlorobutadiene	0.5					
D034 Hexachloroethane	3.0					
D035 Methyl ethyl ketone	200.0					
D036 Nitrobenzene	2.0					
D037 Pentachlorophenol	100.0					
D038 Pyridine	5.0					
D039 Tetrachloroethylene	0.7					
D040 Trichloroethylene	0.5					
D041 2,4,5-Trichlorophenol	400.0					
D042 2,4,6-Trichlorophenol	2.0					
D043 Vinyl Chloride	0.2					

As defined by the TCLP (Method 1311), EP Toxicity is no longer acceptable.

"LISTED" Hazardous Wastes: Indicate if this waste also contains any listed hazardous wastes coded in 40 CFR 261.31, 261.32 and 261.33 by including the appropriate EPA hazardous waste code(s).

GENERATOR CERTIFICATION:

I hereby certify that all information submitted on this form and all attached documents are true and accurate. In the event that this form is not fully completed, I authorize M & M Chemical Company, Inc. to conduct necessary testing at my expense to properly complete the form.

Signature: _____ Date: _____

Print Name: _____ Title: _____

THIS CERTIFICATION/RECERTIFICATION IS REQUIRED FOR EACH PROFILE.
ORIGINAL SIGNATURE REQUIRED

6.2.1.1 Pre-qualification Procedures and Analysis (continued)

profile. Selected parameters from those listed in Section 6.2.1.2 will be used to confirm the waste profile. Typically, however, BTU value, ash content, halogen content (if applicable), flashpoint, pH (if applicable), moisture content, specific gravity, compatibility, metals and organic content may be used.

If discrepancies are noted, Oldover will contact the generator and describe the discrepancy. The generator is allowed to revise a profile. If the profile is revised, the generator may fax the corrected document.

An updated Profile Sheet and any additional information deemed necessary by Oldover personnel will be requested from a waste generator as follows:

* annually or
* when it is believed that the process or operation generating the hazardous waste has changed, or
* when the results of the waste analysis conducted by Oldover or other qualified laboratory on an subsequent shipment indicate that the waste is not appropriately characterized.

6.2.1.2 Parameters to be Analyzed and Rationale

Certain parameters are important in both pre-qualification and shipment acceptance testing. Shipment acceptance testing, or fingerprinting, is used to compare shipment data to the waste profile sheet and shipment manifest. This section of the

6.2.1.2 Parameters to be Analyzed and Rationale (continued)

Waste Analysis Plan presents the parameters to be analyzed during pre-qualification and/or individual shipment testing.

Specific Gravity.

Specific gravity is an indicator of the nature of the waste stream. For example, if a material comes as "X" percent acetone and "Y" percent water, there is an easily determined specific gravity for that stream. If analysis of the stream shows a significantly different specific gravity, this may indicate an out-of-specification waste.

BTU Heat Content.

In a waste stream, this determine the waste's potential for use as a fuel and also serves as an indicator of the composition of the waste stream.

Moisture Content.

The moisture content of the waste stream is measured as percent water and is an indication of the suitability of the waste stream for use as a fuel and changes in the waste stream.

Flash Point.

Flash point is another basic indicator of the ignitability of the material and its potential for use as fuel.

Ash Content.

The ash content indicates the amount of nonburnable residue remaining after complete combustion of the waste stream. Ash is a general indicator of the fuel quality of the waste stream.

6.2.1.2 Parameters to be Analyzed and Rationale (continued)

Compatibility.

A Compatibility Test is conducted for all waste received at the Oldover facility for storage, blending and/or processing. A sample from each load received is tested to determine if the material reacts with other materials already in the system. For this test, a plastic tube with a screw top cap is half filled with a sample of current material from the storage tank. The container is then completely filled with a sample from the load being received and capped. The 50-50 mixture is shaken and observed. If the samples react chemically (i.e. if temperature increases significantly or mixture gels) the waste is deemed to be incompatible.

pH.

pH is a very important indicator of the nature of a waste since unwanted reactions may occur when wastes of widely different pH are mixed.

PCB's.

Oldover Corporation does not accept regulated PCB wastes, thus, it is important to sample and analyze for PCB content. Waste containing greater than or equal to 50 ppm will be rejected from Oldover.

Metals Concentration.

In accordance with the B.I.F. Rules, Florida Solite has a limit on the quantity of certain metals that it can process. Oldover can receive wastes containing higher quantities of these metals provided that the blend being transferred to Florida Solite is within B.I.F. limits. Thus it is necessary that Oldover

6.2.1.2 Parameters to be Analyzed and Rationale (continued)

Metals Concentration (continued).

analyze for those metals that may be present at significant levels in order to know the metal content and to control, by blending, the metal content in the blended fuel transferred to Florida Solite.

Radioactivity.

Radioactive wastes are not accepted at Oldover for processing, blending or storage. All incoming waste streams are screened for the presence of radiation using an electronic radiation meter.

Reactivity.

Oldover does not process, blend or store reactive waste.

6.2.1.3 In-Coming Shipment Procedures and Analysis

In addition to the pre-qualification procedures, samples from each waste shipment are analyzed upon arrival at Oldover and the results are compared to the waste profile. Oldover will also analyze individual samples collected from each generator in the event that an incoming shipment is accompanied by manifests from more than one generator.

Typically, BTU value, ash content, halogen content (if applicable), flashpoint, pH, moisture content, specific gravity, compatibility, metals and organic content may be used. The procedures used to inspect and ensure that the waste received match the accompanying manifest include 1) evaluation of waste codes and shipping description compared to the Waste Profile Sheet; 2) evaluation of the Waste Profile sheet compared to pre-qualification analytical data;

6.2.1.3 In-Coming Shipment Procedures and Analysis (continued)

and 3) comparison of pre-qualification analytical data to shipment fingerprint analysis. Table 6-1 lists the criteria for accepting waste. Other tests may be run as appropriate.

If discrepancies are noted Oldover will contact the generator within 24 hours and describe the discrepancy. The generator normally is allowed 24 hours to 1) revise the profile; 2) correct the manifest; or 3) make arrangements to remove the waste. If revisions are necessary, the generator may fax the corrected document.

Flammable solvents and other wastes bulked, blended or processed for shipment off-site will receive selected analysis in accordance with requirements of the receiving facility.

6.2.2 Test Methods

Table 6-2 lists the sample parameters and the test methods utilized to measure each parameter at the Oldover laboratory. Because of the varied nature of the liquid burnable material, it may be desirable or necessary to modify or adapt the standard analytical methods or the sample preparation methods used prior to analysis, or to use entirely alternative methods. Such modifications are permissible under this plan, provided that the modified or alternative procedure produces accurate and reliable results. However, test methods normally conform to SW-846 methods, ASTM methods or other acceptable methods.

Table 6-1
Criteria for Acceptance of Waste

Parameter	Criteria
BTU's	No restrictions, however, must be capable of blending to ≥5,000 BTU/Lb. 15% variance from profile sheet.
Ash	25% variance from Profile Sheet.
Halogens	25% variance from Profile Sheet, however, must be capable of blending to BIF limits.
Flash Point	No Restrictions, however, 15% variance from profile sheet.
Moisture Content	No restrictions, however, 25% variance from profile sheet.
pH	Greater than 2, and less than 12.5, however, ± 1.5 S.U. variance from profile sheet.
Specific Gravity	± 0.1 units variance from Profile Sheet.
Compatibility	Maximum 20°F Temperature rise in two minutes.
Metals	Must be capable of blending to BIF limits, 25% variation from Waste Profile Sheet. This is tested if metals are shown on the Waste Profile Sheet.
Organics	No significant variation of the manifest from the Waste Profile Sheets.
PCB's	Less than or equal to 50 ppm.
Radioactivity	None detectable above background

TABLE 6-2

Parameters and Test Methods for Analysis *

Parameters	Pre-Qualification	Incoming Shipments	Test Methods	Reference
Specific Gravity	X	X	Standard Hydrometer	-
Flash Point	X	X	Close-cup Method	USEPA SW-846, Method 1010
pH	X	X	pH Measurement or Litmus Paper	USEPA SW-846, Method 9040
Heat of Combustion and Ash Residue	X	X	Bomb Calorimeter	ASTM D-240
Moisture Content	X	X	Electrometric	ASTM D-2361 and D-805
Halogen/Chlorine	X	X	Karl Fisher	-
Polychlorinated Biphenyls	X	X	Gas Chromatography	Test Method for Evaluating Solid Waste (EPA SW-846 8080, 1986)
Heavy Metals	X	X**	Atomic Absorption or Emission Spectroscopy (i.e. ICP, Flame AA, GFAA, CVAA)	Test Methods for Evaluating Solid Waste (EPA, SW-846)
Radioactivity		X	Meter with Geiger Probe	-
General Organic Composition	X		Gas Chromatography	Test Method for Evaluating Solid Waste, as appropriate (EPA, SW-846 8010, 8015, 8020, 8030, 8040, 8060, 8070, 8080, 8090, 8100, 8110, 8120, 8150, 1986)

* The Above methods may be modified or alternate modified standard methods may be substituted for those listed provide the method is sufficiently accurate and reliable for waste acceptance procedures.

** This parameter is evaluated if the data on the Waste Profile Sheet indicates this parameter is necessary.

6.2.2 Test Methods (continued)

Initial testing for qualifying a new waste stream is generally performed by Oldover Corporation. Alternate laboratories with a Department approved Comprehensive Quality Assurance Plan may also be used. Analysis of samples collected from incoming trucks or rail cars for acceptance at Oldover is generally performed in laboratories at the facility. If the facility is unable to analyze a sample in a timely manner, an alternate laboratory will be utilized. Flow schematics for these procedures are found in Figure 6-3.

6.2.3 Sampling Methods

Sampling of tankers and rail cars is accomplished using the mechanical liquid sampling device (MLSD) shown in Figure 6-4. This sampler works on the same principle as the composite liquid waste sampler (COLIWASA) specified for use by EPA to obtain a representative sample of liquid wastes in a large vessel. An aliquot of all samples is retained for later confirmation. Using this technique, the ball valve is opened with the lever, and the pipe is lowered at a uniform rate to the bottom of the vessel. When the pipe reaches the bottom, the ball is closed and the sample withdrawn. A similar procedure will be used to collect individual samples from each generator in the event that an Oldover Corporation transport vehicle collects waste from more than one generator at one time. Additionally, if waste is collected from generators that store material in containers, then the number of containers to be sampled will be the square root or 10% of the total number of containers, whichever is greater; for generators with less than 25 containers, one out of every five containers will be sampled.

6.2.4 Frequency of Analysis

Two levels of testing are involved for acceptance of hazardous waste: (1) pre-qualification of all waste streams, and (2) sampling and testing prior to acceptance for storage, blending and/or processing. All new waste streams are pre-qualified. Waste streams in current use are reviewed annually when suppliers are required to provide re-certification of their waste characterizations. Each incoming waste shipment is sampled to confirm the identity of the waste.

Work Flow Schematic

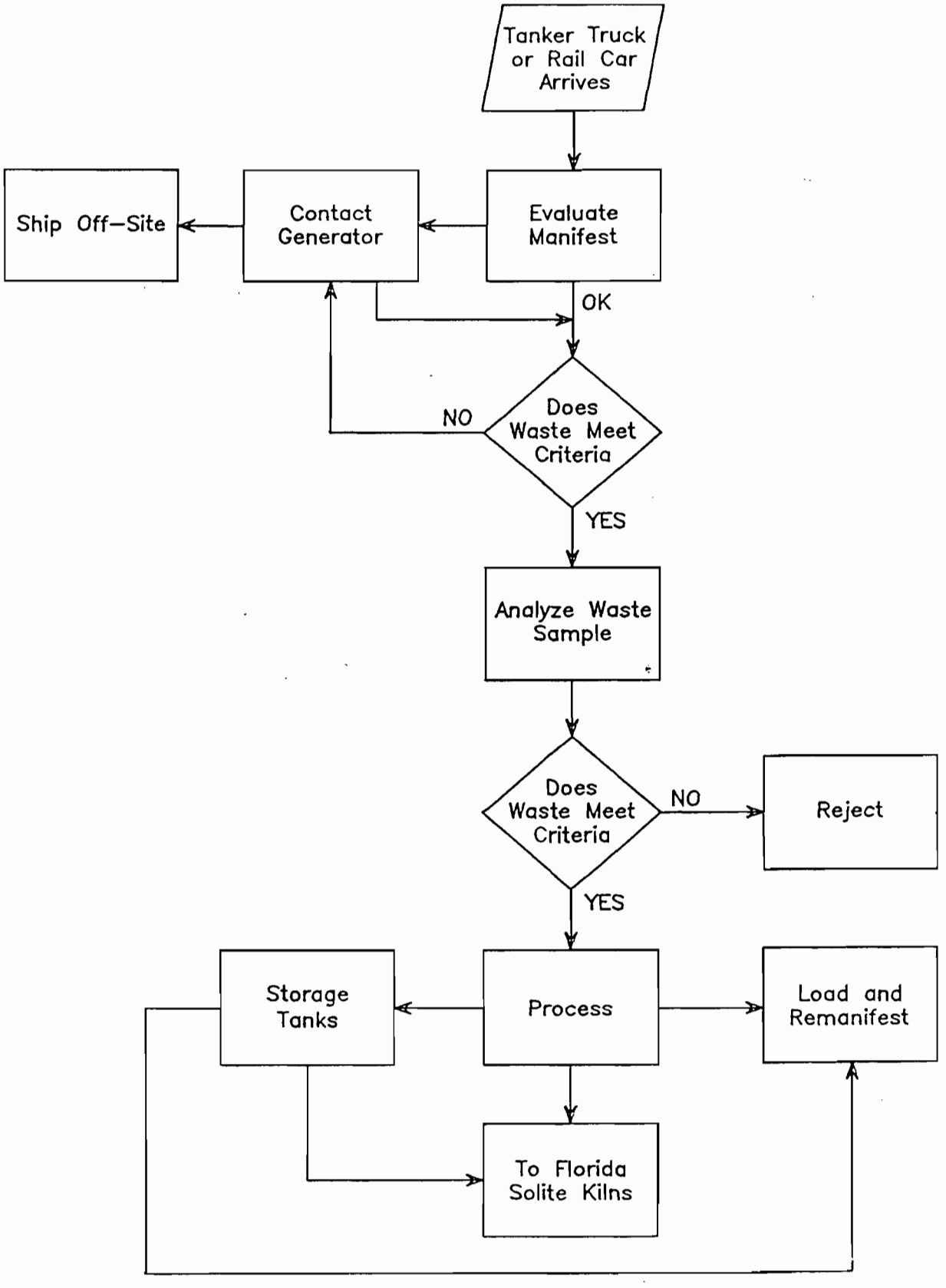

MITTAUER/FITZPATRICK, INC.
CONSULTING ENGINEERS
ORANGE PARK, FLORIDA (904) 276–5236

OLDOVER CORPORATION
Hazardous Waste Management Facility
Work Flow Schematic
Green Cove Springs, Florida

FIGURE
6–3
JULY 1992

1993

Mechanical Liquid Sampling Device
(MLSD)

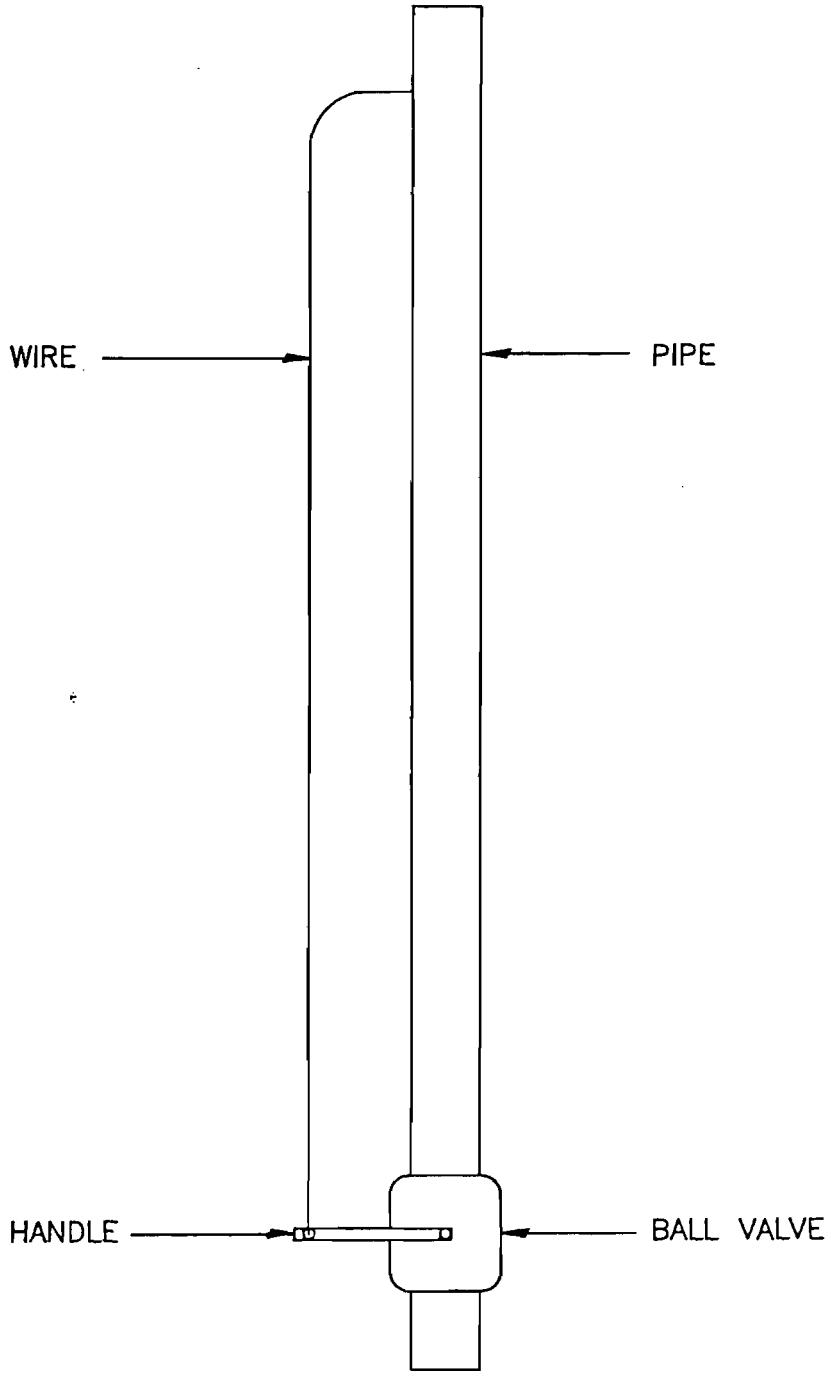

MITTAUER/FITZPATRICK, INC.
CONSULTING ENGINEERS
ORANGE PARK, FLORIDA (904) 276-5236

OLDOVER CORPORATION
Hazardous Waste Management Facility
Mechanical Liquid Sampling Device
Green Cove Springs, Florida

FIGURE
6-4
JULY 1992

6.2.5 Quality Assurance Plan

A quality assurance/quality control (QA/QC) program is used as a tool to assure quality data. Periodic blind check samples are obtained and analyzed by the facility laboratory. Results are compared with those produced by another laboratory or a split of the same sample. Discrepancies are investigated and resolved. Outside laboratories will be required to have a Department approved Comprehensive Quality Assurance Plan.

6.2.6 Additional Requirements for Wastes Generated Off-Site

Oldover Corporation stores, blends and processes wastes that are generated both off-site and on-site. The procedures for confirming the identity of wastes received is as described elsewhere in this Plan.

A compatibility test is conducted for all waste received at the Oldover facilities for storage, blending or processing. A sample from each load received is tested to determine if the material reacts with other materials already in the system.

For this test, a plastic test tube with screw top cap is half filled with a sample of material from the system. The container is then completely filled with a sample from the load being received and capped. The 50-50 mixture is shaken and observed to determine if the samples react chemically. The mixture is monitored for a temperature rise in reference to ambient temperature and compared to the acceptance criteria on Table 6-1.

Because of the flammable nature of the wastes in the Oldover operation, smoking is not permitted within restricted areas. "No Smoking" signs are posted conspicuously in these areas throughout the facility. All of the liquid materials handled at the facility are pumped through piping to the tanks, processing system and other areas (such as, loading/unloading areas and kilns) using pumps equipped with explosion proof motors to prevent ignition.

6.2.7 Additional Requirements for Facilities Handling Ignitable, Reactive or Incompatible Waste

Welding and any other open flames are not permitted in any of these areas without proper precautions. Danger signs are posted in the appropriate areas. Workers have been trained regarding possible hazards.

6.3 Additional Waste Analysis Requirements Pertaining to Land Disposal Restrictions

Oldover Corporation does not treat or dispose of any hazardous waste in land disposal units at the facility. Wastes are stored in tanks, blended or processed for off-site shipment to approved facilities. Therefore, no additional waste analysis is required for compliance with 40 CFR Part 268, Land Disposal Restrictions.

Should any waste be generated at the facility requiring shipment off-site, knowledge of the waste generated or sufficient chemical testing will allow Oldover to make proper notification of any land ban restrictions to the receiving facility.

ATTACHMENT 10

AIR EMISSIONS AND IMPACTS EVALUATION

AIR EMISSIONS EVALUATION
FLORIDA SOLITE
(9/93)

Item	Constituent or Pollutant	Constituent in Clay ppm	Constituent in Clay lb/ton	Input from Clay Kiln 1/1A lb/hr (w/o dust) Permit 8.6 tph	Input from Clay Kiln 1/1A lb/hr (w/ dust) 7.6 tph	Input from Clay Kiln 5 lb/hr (w/o dust) Permit 13.2 tph	Input from Clay Kiln 5 lb/hr (w/ dust) 10.4 tph	Constituent in Dust ppm	Constituent in Dust lb/ton	Input from Dust Kiln 1/1A lb/hr 1 tph	Input from Dust Kiln 5 lb/hr 2.8 tph
			(C/500)	(Dx8.6)	(Dx7.6)	(Dx13.2)	(Dx10.4)		(I/500)	(Jx1)	(Jx2.8)
A	B	C	D	E	F	G	H	I	J	K	L
1	Antimony	10.00	0.0200	0.1720	0.1520	0.2640	0.2080	20.00	0.0400	0.0400	0.1120
2	Arsenic	10.00	0.0200	0.1720	0.1520	0.2640	0.2080	77.00	0.1540	0.1540	0.4312
3	Barium	40.00	0.0800	0.6880	0.6080	1.0560	0.8320	140.00	0.2800	0.2800	0.7840
4	Beryllium	3.00	0.0060	0.0516	0.0456	0.0792	0.0624	5.00	0.0100	0.0100	0.0280
5	Cadmium	2.00	0.0040	0.0344	0.0304	0.0528	0.0416	15.00	0.0300	0.0300	0.0840
6	Carbon Monoxide	NA	0.6140	5.2804	4.6664	8.1048	6.3856	NA	0.0000	0.0000	0.0000
7	Chlorine	0.30	0.0006	0.0052	0.0046	0.0079	0.0062	0.30	0.0006	0.0006	0.0017
8	Chromium Total	65.00	0.1300	1.1180	0.9880	1.7160	1.3520	153.00	0.3060	0.3060	0.8568
9	Chromium +6	3.25	0.0065	0.0559	0.0494	0.0858	0.0676	8.00	0.0160	0.0160	0.0448
10	Hydrogen Chloride	9.70	0.0194	0.1668	0.1474	0.2561	0.2018	9.70	0.0194	0.0194	0.0543
11	Lead	35.00	0.0700	0.6020	0.5320	0.9240	0.7280	490.00	0.9800	0.9800	2.7440
12	Mercury	10.00	0.0200	0.1720	0.1520	0.2640	0.2080	50.00	0.1000	0.1000	0.2800
13	Nickel	30.00	0.0600	0.5160	0.4560	0.7920	0.6240	231.00	0.4620	0.4620	1.2936
14	Nitrogen Oxides	NA	0.0000	0.0000	0.0000	0.0000	0.0000	NA	0.0000	0.0000	0.0000
15	Particulate Matter	NA	56.9800	490.0280	433.0480	752.1360	592.5920	NA	56.9800	56.9800	159.5440
16	Selenium	1.00	0.0020	0.0172	0.0152	0.0264	0.0208	7.70	0.0154	0.0154	0.0431
17	Silver	2.00	0.0040	0.0344	0.0304	0.0528	0.0416	10.00	0.0200	0.0200	0.0560
18	Sulfur Dioxide	NA	2.4000	20.6400	18.2400	31.6800	24.9600	NA	0.0000	0.0000	0.0000
19	Thallium	10.00	0.0200	0.1720	0.1520	0.2640	0.2080	38.00	0.0760	0.0760	0.2128
20	VOCs	NA	0.0480	0.4128	0.3648	0.6336	0.4992	NA	0.0000	0.0000	0.0000

NOTES :

1. Concentration of metals in clay based on clay analysis data.
2. Concentration of metals in baghouse dust based on studies at other Solite plants.
3. CO and VOC released from clay (lb/ton) based on test data.
4. Chlorides in clay are estimated to partition into 3% chlorine and 97% hydrogen chlorides.
5. Chrome +6 is estimated to be 5% of total chromium.
6. PM generation rate (lb/ton) based on AP-42.
7. Clay sulfur content of 600 ppm estimated to result in 2.4 lbs SO2/ton of clay.

Item	Constituent or Pollutant	Constituent in Coal ppm	lb/ lb/ton	Input from Coal Kiln 1/1A lb/hr	Kiln 5 lb/hr	Constituent in LBM ppm	lb/ lb/1000gal	Input from LBM Kiln 1/1A lb/hr	Kiln 5 lb/hr
				Permit 1.4 tph use 2 tph	Permit 2.75 tph			Permit 476 gph	Permit 733 gph
			(M/500)	(Nx2)	(Nx2.75)		(Qx0.008)	(Rx0.476)	(Rx0.733)
A	B	M	N	O	P	Q	R	S	T
1	Antimony	7.70	0.02	0.0308	0.0424	5000	40.00	19.0400	29.3200
2	Arsenic	9.00	0.02	0.0360	0.0495	1000	8.00	3.8080	5.8640
3	Barium	420.00	0.84	1.6800	2.3100	500000	4000.00	1904.0000	2932.0000
4	Beryllium	1.90	0.00	0.0076	0.0105	3000	24.00	11.4240	17.5920
5	Cadmium	0.08	0.00	0.0003	0.0004	1000	8.00	3.8080	5.8640
6	Carbon Monoxide	NA	0.60	1.2000	1.6500	NA	5.00	2.3800	3.6650
7	Chlorine	240.00	0.48	0.9600	1.3200	1000	8.00	3.8080	5.8640
8	Chromium Total	14.00	0.03	0.0560	0.0770	5000	40.00	19.0400	29.3200
9	Chromium +6	0.70	0.00	0.0028	0.0039	250	2.00	0.9520	1.4660
10	Hydrogen Chloride	7760.00	15.52	31.0400	42.6800	33000	264.00	125.6640	193.5120
11	Lead	18.00	0.04	0.0720	0.0990	50000	400.00	190.4000	293.2000
12	Mercury	0.47	0.00	0.0019	0.0026	300	2.40	1.1424	1.7592
13	Nickel	11.00	0.02	0.0440	0.0605	5000	40.00	19.0400	29.3200
14	Nitrogen Oxides	NA	21.00	42.0000	57.7500	NA	20.00	9.5200	14.6600
15	Particulate Matter	NA	120.00	240.0000	330.0000	NA	610.00	290.3600	447.1300
16	Selenium	8.10	0.02	0.0324	0.0446	5000	40.00	19.0400	29.3200
17	Silver	0.06	0.00	0.0002	0.0003	50000	400.00	190.4000	293.2000
18	Sulfur Dioxide	NA	58.50	117.0000	160.8750	NA	294.00	139.9440	215.5020
19	Thallium	1.30	0.00	0.0052	0.0072	2000	16.00	7.6160	11.7280
20	VOCs	NA	0.07	0.1400	0.1925	NA	1.00	0.4760	0.7330

NOTES :

8. Concentration of metals in coal based on EPA references. Maximum expected levels used for non-carcinogens and geometric mean for carcinogens.
9. Concentration of metals in LBM based on compliance criteria for BIF and ambient air standards.
10. A coal input rate for Kiln 1/1A of 2 tph is used in place of the permitted limit of 1.4 tph, to demonstrate compliance with BIF and ambient air quality standards with all coal (fuel) feed.
11. CO, NOx, PM, SO2 (@ 1.5% S), and VOC coal factors (lb/ton) based on AP-42 for coal.
12. CO, NOx, PM, SO2 (@ 2.0% S), and VOC LBM factors (lb/1000 gal) based on AP-42 factors for used oil.
13. LBM lead concentration of 50,000 ppm was used to demonstrate compliance with BIF and ambient air standard and permit conditions.
14. LBM mercury content of 300 ppm was used in the analysis in place of the permit limit of 0.2 ppm to demonstrate compliance with BIF and ambient air standard even at the higher concentration.

Item	Constituent or Pollutant	Total Constituent Input to Kiln						Estimated System Efficiency %
		Kiln 1/1A			Kiln 5			
		Coal lb/hr	Coal+Dust lb/hr	LBM+Dust lb/hr	Coal lb/hr	Coal+Dust lb/hr	LBM+Dust lb/hr	(w/BH)
		(E+O)	(F+K+O)	(F+K+S)	(G+P)	(H+L+P)	(H+L+T)	
A	B	U	V	W	X	Y	Z	AA
1	Antimony	0.2028	0.2228	19.2320	0.3064	0.3624	29.6400	99.9
2	Arsenic	0.2080	0.3420	4.1140	0.3135	0.6887	6.5032	99.8
3	Barium	2.3680	2.5680	1904.8880	3.3660	3.9260	2933.6160	99.9
4	Beryllium	0.0592	0.0632	11.4796	0.0897	0.1009	17.6824	99.9
5	Cadmium	0.0347	0.0607	3.8684	0.0532	0.1260	5.9896	99.7
6	Carbon Monoxide	6.4804	5.8664	7.0464	9.7548	8.0356	10.0506	0.0
7	Chlorine	0.9652	0.9652	3.8132	1.3279	1.3279	5.8719	34.0
8	Chromium Total	1.1740	1.3500	20.3340	1.7930	2.2858	31.5288	99.9
9	Chromium +6	0.0587	0.0682	1.0174	0.0897	0.1163	1.5784	99.9
10	Hydrogen Chloride	31.2068	31.2068	125.8308	42.9361	42.9361	193.7681	34.0
11	Lead	0.6740	1.5840	191.9120	1.0230	3.5710	296.6720	99.9
12	Mercury	0.1739	0.2539	1.3944	0.2666	0.4906	2.2472	50.0
13	Nickel	0.5600	0.9620	19.9580	0.8525	1.9781	31.2376	99.9
14	Nitrogen Oxides	42.0000	42.0000	9.5200	57.7500	57.7500	14.6600	0.0
15	Particulate Matter	730.0280	730.0280	780.3880	1082.1360	1082.1360	1199.2660	99.9
16	Selenium	0.0496	0.0630	19.0706	0.0710	0.1085	29.3839	95.0
17	Silver	0.0346	0.0506	190.4504	0.0531	0.0979	293.2976	99.5
18	Sulfur Dioxide	137.6400	135.2400	158.1840	192.5550	185.8350	240.4620	0.0
19	Thallium	0.1772	0.2332	7.6440	0.2712	0.4280	12.1488	80.0
20	VOCs	0.5528	0.5048	0.8408	0.8261	0.6917	1.2322	99.9

NOTES :

15. System efficiency (SE) includes the baghouse efficiency and partitioning factors for all kiln input streams. SE based on study at other Solite plants.
16. In this analysis it is assumed that the system offers no control for CO and NOx emissions.
17. Although lime injection will provide reduction in SO2 emissions, this analysis assumes zero control of SO2 to demonstrate compliance with ambient air standards.

Item	Constituent or Pollutant	Controlled Kiln 1/1A Emissions Baghouse Coal+Dust lb/hr	LBM+Dust lb/hr	Maximum Baghouse lb/hr	Fuel	Controlled Kiln 5 Emissions Baghouse Coal+Dust lb/hr	LBM+Dust lb/hr	Maximum Baghouse lb/hr	Fuel
		(Vx(1-AA/100))	(Wx(1-AA/100))	(ABtoAC)	(LBM/Coal)	(Yx(1-AA/100))	(Zx(1-AA/100))	(AF to AG)	(LBM/Coal)
A	B	AB	AC	AD	AE	AF	AG	AH	AI
1	Antimony	0.00022	0.01923	0.0192	LBM	0.00036	0.02964	0.0296	LBM
2	Arsenic	0.00068	0.00823	0.0082	LBM	0.00138	0.01301	0.0130	LBM
3	Barium	0.00257	1.90489	1.9049	LBM	0.00393	2.93362	2.9336	LBM
4	Beryllium	0.00006	0.01148	0.0115	LBM	0.00010	0.01768	0.0177	LBM
5	Cadmium	0.00018	0.01161	0.0116	LBM	0.00038	0.01797	0.0180	LBM
6	Carbon Monoxide	5.86640	7.04640	7.0464	LBM	8.03560	10.05060	10.0506	LBM
7	Chlorine	0.63701	2.51669	2.5167	LBM	0.87643	3.87547	3.8755	LBM
8	Chromium Total	0.00135	0.02033	0.0203	LBM	0.00229	0.03153	0.0315	LBM
9	Chromium +6	0.00007	0.00102	0.0010	LBM	0.00012	0.00158	0.0016	LBM
10	Hydrogen Chloride	20.59651	83.04835	83.0484	LBM	28.33781	127.88693	127.8869	LBM
11	Lead	0.00158	0.19191	0.1919	LBM	0.00357	0.29667	0.2967	LBM
12	Mercury	0.12694	0.69720	0.6972	LBM	0.24529	1.12360	1.1236	LBM
13	Nickel	0.00096	0.01996	0.0200	LBM	0.00198	0.03124	0.0312	LBM
14	Nitrogen Oxides	42.00000	9.52000	42.0000	Coal	57.75000	14.66000	57.7500	Coal
15	Particulate Matter	0.73003	0.78039	0.7804	LBM	1.08214	1.19927	1.1993	LBM
16	Selenium	0.00315	0.95353	0.9535	LBM	0.00542	1.46920	1.4692	LBM
17	Silver	0.00025	0.95225	0.9523	LBM	0.00049	1.46649	1.4665	LBM
18	Sulfur Dioxide	135.24000	158.18400	158.1840	LBM	185.83500	240.46200	240.4620	LBM
19	Thallium	0.04664	1.56880	1.5688	LBM	0.08559	2.42976	2.4298	LBM
20	VOCs	0.00050	0.00084	0.0008	LBM	0.00069	0.00123	0.0012	LBM

NOTES :

18. Pollutant emissions based on conservative assumptions to demonstrate compliance with BIF and ambient air standards even at emission rates greater than permit allowable.

Item	Constituent or Pollutant	Kiln 1/1A BH and Kiln 5 BH MAX IMPACT 1-HR (ug/m3)	MAX IMPACT 3-HR (ug/m3)	MAX IMPACT 8-HR (ug/m3)	MAX IMPACT 24-HR (ug/m3)	MAX IMPACT ANNUAL (ug/m3)	
A	B	(AD.AH) AJ	(AD.AH) AK	(AD.AH) AL	(AD.AH) AM	(AD.AH) AN	
1	Antimony	NS	NS	0.0105 5	0.0059	0.0005	0.3
2	Arsenic	NS	NS	0.0046 2	0.0026	0.0002	0.00023
3	Barium	NS	NS	1.0370 5	0.5828	0.0524	50
4	Beryllium	NS	NS	0.0063 0.02	0.0035	0.0003	0.00042
5	Cadmium	NS	NS	0.0063 0.5	0.0036	0.0003	0.00056
6	Carbon Monoxide	5.2348	NS	3.6643 10000	2.0594	0.1853	NS
7	Chlorine	NS	NS	1.3700 15	0.7700	0.0693	0.4
8	Chromium Total	NS	NS	0.0111 5	0.0062	0.0006	NS
9	Chromium +6	NS	NS	0.0006 0.5	0.0003	0.0000	8.3E-05
10	Hydrogen Chloride	NS	NS	45.2089 75	25.4084	2.2857	7
11	Lead	NS	NS	0.1047	0.0589	0.0053	
12	Mercury	NS	NS	0.3902	0.2193	0.0197	
13	Nickel	NS	NS	0.0110	0.0062	0.0006	
14	Nitrogen Oxides	NS	NS	21.3790	12.0155	1.0809	
15	Particulate Matter	NS	NS	0.4243	0.2385	0.0215	
16	Selenium	NS	NS	0.5193	0.2918	0.0263	
17	Silver	NS	NS	0.5184	0.2914	0.0262	
18	Sulfur Dioxide	NS	122.0574	85.4402	48.0193	4.3197	
19	Thallium	NS	NS	0.8570	0.4817	0.0433	
20	VOCs	0.0006	NS	0.0004	0.0002	0.0000	

NOTES :

19. The maximum predicted ambient air impacts are based on the highest second-high impacts resulting from ISC2 modeling using five years of Jacksonville meteorological data.
20. Impacts for the 1-hr and 3-hr periods were evaluated only for pollutants with corresponding standards. NS reflects "no standard".

Item	Constituent or Pollutant	STD or NTL 1-HR (ug/m3)	STD or NTL 3-HR (ug/m3)	STD or NTL 8-HR (ug/m3)	STD or NTL 24-HR (ug/m3)	STD or NTL ANNUAL (ug/m3)
A	B	AO	AP	AQ	AR	AS
1	Antimony	NS	NS	5	NA	0.3
2	Arsenic	NS	NS	2	NA	0.0023
3	Barium	NS	NS	5	NA	50
4	Beryllium	NS	NS	0.02	NA	0.0041
5	Cadmium	NS	NS	0.5	NA	0.0055
6	Carbon Monoxide	40000	NS	10000	NS	NS
7	Chlorine	NS	NS	15	NA	0.4
8	Chromium Total	NS	NS	5	1.2	NS
9	Chromium +6	NS	NS	0.5	NA	0.00083
10	Hydrogen Chloride	NS	NS	75	NA	7
11	Lead	NS	NS	0.5	NS	0.09
12	Mercury	NS	NS	0.5	NA	0.08
13	Nickel	NS	NS	10	NA	20
14	Nitrogen Oxides	NS	NS	NS	NS	100
15	Particulate Matter	NS	NS	NS	150	50
16	Selenium	NS	NS	2	NA	4
17	Silver	NS	NS	1	NA	3
18	Sulfur Dioxide	NS	1300	NS	260	60
19	Thallium	NS	NS	1	NA	0.3
20	VOCs	235	NS	NS	NS	NS

NOTES :

21. Only BIF, ambient air standard or FDEP NTL are considered in evaluation. NS reflects "no standard".
22. A 24-hr NTL was not evaluated for a pollutant with 8-hr and annual NTLs (in agreement with FDEP) and is indicated by "NA".

Item	Constituent or Pollutant	% CONC / STD or NTL 1-HR	3-HR	8-HR	24-HR	ANNUAL	MAX %	Risk (1E-5)	STD or NTL Exceeded
		for %							
		(AJ/AO x100)	(AK/AP x100)	(AL/AQ x100)	(AM/AR x100)	(AN/AS x100)	(ATtoAX)	(AX/100)	(AS>100)
A	B	AT	AU	AV	AW	AX	AY	AZ	BA
1	Antimony	NS	NS	0.21	NA	0.18	0.21	NS	NO
2	Arsenic	NS	NS	0.23	NA	10.00	10.00	0.10	NO
3	Barium	NS	NS	20.74	NA	0.10	20.74	NS	NO
4	Beryllium	NS	NS	31.25	NA	7.71	31.25	0.08	NO
5	Cadmium	NS	NS	1.27	NA	5.83	5.83	0.06	NO
6	Carbon Monoxide	0.0131	NS	0.04	NS	NS	0.04	NS	NO
7	Chlorine	NS	NS	9.13	NA	17.32	17.32	NS	NO
8	Chromium Total	NS	NS	0.22	0.52	NS	0.52	NS	NO
9	Chromium +6	NS	NS	0.11	NA	3.39	3.39	0.03	NO
10	Hydrogen Chloride	NS	NS	60.28	NA	32.65	60.28 S	NS	NO
11	Lead	NS	NS	20.94	NS	5.88	20.94 S	NS	NO
12	Mercury	NS	NS	78.05	NA	24.66	78.05 S	NS	NO
13	Nickel	NS	NS	0.11	NA	0.00	0.11 S	NS	NO
14	Nitrogen Oxides	NS	NS	NS	NS	1.08	1.08 L	NS	NO
15	Particulate Matter	NS	NS	NS	0.16	0.04	0.16	NS	NO
16	Selenium	NS	NS	25.96	NA	0.66	25.96 S	NS	NO
17	Silver	NS	NS	51.84	NA	0.87	51.84 S	NS	NO
18	Sulfur Dioxide	NS	9.39	NS	18.47	7.20	18.47	NS	NO
19	Thallium	NS	NS	85.70	NA	14.44	85.70 S	NS	NO
20	VOCs	0.0003	NS	NS	NS	NS	0.00	NS	NO

CUMULATIVE RISK = 0.27

NOTES :

23. The incremental lifetime cumulative cancer risk is the sum of the risk to the maximum exposed individual (MEI) from each carcinogen. The projected risk is less than the acceptable risk of 1 in 100,000.
24. The projected impacts will comply with BIF and ambient air standards as well as the applicable FDEP NTLs. NS reflects "no standard" and NA reflects "not applicable".

AIR EMISSIO[illegible]VALUATION
CALCULATION SUMMARY FOR SPREADSHEET
FLORIDA SOLITE

Column	Formula	Calculation
A :	NA	Constituent Number
B :	NA	Constituent Name
C :	NA	Constituent in Clay (ppm)
D :	+C11/500	C/500. Factors for: VOC & CO=test; PM=AP-42; SO2=S balance
E :	+D11*8.6	D*8.6
F :	+D11*7.6	D*7.6
G :	+D11*13.2	D*13.2
H :	+D11*10.4	D*10.4
I :	NA	Constituent in Dust (ppm)
J :	+I11/500	I/500
K :	+J11*1	J*1
L :	+J11*2.8	J*2.8
M :	NA	Constituent in Coal (ppm)
N :	+M11/500	M/500. Factors for criteria pollutants=AP-42
O :	+N11*2	N*2
P :	+N11*2.75	N*2.75
Q :	NA	Constituent in LBM (ppm)
R :	+Q11*0.008	Q*0.008. Factors for criteria pollutants=AP-42
S :	+R11*0.476	R*0.476
T :	+R11*0.733	R*0.733
U :	+E11+O11	E+O
V :	+F11+K11+O11	F+K+O
W :	+F11+K11+S11	F+K+S
X :	+G11+P11	G+P
Y :	+H11+L11+P11	H+L+P
Z :	+H11+L11+T11	H+L+T
AA:	NA	System efficiency from testing at other Solite plant.
AB:	(V11*(1-AA11/100))	(V*(1-AA/100))
AC:	(W11*(1-AA11/100))	(W*(1-AA/100))
AD:	@MAX(AB11..AC11)	FIND THE MAXIMUM OF COLUMNS (AB THRU AC)
AE:	@IF(AD11=AC11," LBM "," Coal")	IF COLUMN AD IS EQUAL TO COLUMN AC, THEN PRINT "LBM",OTHERWISE PRINT "Coal"
AF:	(Y11*(1-AA11/100))	(Y*(1-AA/100))
AG:	(Z11*(1-AA11/100))	(Z*(1-AA/100))
AH:	@MAX(AF11..AG11)	FIND THE MAXIMUN OF COLUMNS (AF THRU AG)
AI:	@IF(AH11=AG11," LBM "," Coal")	IF COLUMN AH IS EQUAL TO COLLUMN AG, THEN PRINT "LBM",OTHERWISE PRINT "Coal"
AJ	((AD16*1.701*0.126)+(AH16*1.701*0.126))/0.7	((AD*1.701*0.126)+(AH*1.701*0.126))/0.74
AK	((AD28*1.701*0.126)+(AH28*1.701*0.126))/0.7	((AD*1.701*0.126)+(AH*1.701*0.126))/0.7
AL:	(AD11*1.701*0.126)+(AH11*1.701*0.126)	(AD*1.701*0.126)+(AH*1.701*0.126)
AM:	(AD11*0.956*0.126)+(AH11*0.956*0.126)	(AD*0.956*0.126)+(AH*0.956*0.126)
AN:	(AD11*0.086*0.126)+(AH11*0.086*0.126)	(AD*0.086*0.126)+(AH*0.086*0.126)
AO:	NA	1-HOUR STANDARD or NTL (µg/m**3)
AP:	NA	3-HOUR STANDARD or NTL (µg/m**3)
AQ:	NA	8-HOUR STANDARD or NTL (µg/m**3)
AR:	NA	24-HOUR STANDARD or NTL (µg/m**3)
AS:	NA	ANNUAL STANDARD or NTL (µg/m**3)
AT:	@IF(AO16>0,(AJ16/AO16)*100," NA")	IF COLUMN AO > 0,THEN (AJ/AO)*100, OTHERWISE PRINT "NA"
AU:	@IF(AP28>0,(AK28/AP28)*100," NA")	IF COLUMN AP > 0,THEN (AK/AP)*100, OTHERWISE PRINT "NA"
AV:	@IF(AQ11>0,(AL11/AQ11)*100," NA")	IF COLUMN AQ > 0,THEN (AL/AQ)*100, OTHERWISE PRINT "NA"
AW:	@IF(AR11>0,(AM11/AR11)*100," NA")	IF COLUMN AR > 0,THEN (AM/AR)*100, OTHERWISE PRINT "NA"
AX:	@IF(AS11>0,(AN11/AS11)*100," NA")	IF COLUMN AS > 0,THEN (AN/AS)*100, OTHERWISE PRINT "NA"
AY:	@IF(@SUM(AT11..AX11)>0,@MAX(AT11..AX11),"NA")	IF THE SUM OF COLUMNS AT THRU AX > 0,THEN FIND THE MAXIMUM OF COLUMNS AT THRU AX,OTHERWISE PRINT "NA"
AZ:	(AX12/100)	(AX/100)
BA:	@IF(AY11>100," YES"," NO")	IF COLUMN AY > 100,THEN PRINT "YES",OTHERWISE PRINT "NO"
AZ:	@SUM(AZ11..AZ30)	FIND THE SUM OF COLUMN AZ

TABLE 1

MATERIAL PROCESSING RATES

FLORIDA SOLITE

Kiln	Mode	Clay tph	Dust tph	Coal tph	LBM gph
1/1A	(S)	8.6	0	2.0	476(1)
1/1A	(BH)	7.6	1	2.0	476
5	(S)	13.2	0	2.75	733(1)
5	(BH)	10.4	2.8	2.75	733

NOTE:

(1) Non-hazardous waste derived LBM for scrubber scenario.
(2) S - Scrubber operation
(3) BH - Baghouse operation

KODGLER & ASSOCIATES

TABLE 2

CONSTITUENT CONCENTRATIONS IN KILN INPUTS

FLORIDA SOLITE

CONSTITUENT	CONCENTRATION				
	Clay(1)	Dust(2)	Coal(3)	LBM	
				BIF(4)	Expected(5)
	ppm	ppm	ppm	ppm	ppm
Antimony	10.0	20.0	7.7	5000	1000
Arsenic	10.0	77.0	9.0	1000	200
Barium	40.0	140.0	420.0	500000	50000
Beryllium	3.0	5.0	1.9	3000	500
Cadmium	2.0	15.0	0.08	1000	500
Chlorides(6)	10.0	10.0	8000.0	34000	34000
Chromium	65.0	153.0	14.0	5000	5000
Cr +6	3.25	8.0	0.7	250	250
Lead	35.0	490.0	18.0	50000	15000
Mercury	10.0	50.0	0.47	300	0.2
Nickel	30.0	231.0	11.0	5000	2000
Selenium	1.0	7.7	8.1	5000	2000
Silver	2.0	10.0	0.06	50000	10000
Sulfur(7)	600.0	0.0	15000.0	20000	20000
Thallium	10.0	38.0	1.3	2000	1000

NOTES:

(1) Concentration of constituents based on clay analyses and from background documentation files for BIF pre-compliance certification forms.

(2) Concentration of constituents based on ratio of baghouse dust to raw feed at other Solite plants.

(3) Concentration of constituents based on coal analyses and EPA references. Values reflect maximum expected concentrations for non-carcinogens, and geometric mean concentrations for carcinogens.

(4) Concentration of constituents in LBM based on ambient air impact analysis reflecting compliance with BIF regulations.

(5) Concentration of constituents in LBM based on permit limitations and expected maximums.

(6) The chlorine and hydrogen chloride air quality impacts, resulting from the chlorides concentration listed above, meet the applicable rule requirements.

(7) The sulfur dioxide air quality impacts, resulting from the sulfur concentrations listed above, meet the applicable rules requirements.

KOOGLER & ASSOCIATES

TABLE 3
AIR EMISSIONS SUMMARY
FLORIDA SOLITE

Item	Constituent or Pollutant	Controlled Kiln 1/1A Emissions Baghouse Coal+Dust lb/hr	LBM+Dust lb/hr	Maximum Baghouse lb/hr	Fuel	Controlled Kiln 5 Emissions Baghouse Coal+Dust lb/hr	LBM+Dust lb/hr	Maximum Baghouse lb/hr	Fuel
		(Vx(1-AA/100))	(Wx(1-AA/100))	(ABtoAC)	(LBM/Coal)	(Yx(1-AA/100))	(Zx(1-AA/100))	(AF to AG)	(LBM/Coal)
A	B	AB	AC	AD	AE	AF	AG	AH	AI
1	Antimony	0.00022	0.01923	0.0192	LBM	0.00036	0.02964	0.0296	LBM
2	Arsenic	0.00068	0.00823	0.0082	LBM	0.00138	0.01301	0.0130	LBM
3	Barium	0.00257	1.90489	1.9049	LBM	0.00393	2.93362	2.9336	LBM
4	Beryllium	0.00006	0.01148	0.0115	LBM	0.00010	0.01768	0.0177	LBM
5	Cadmium	0.00018	0.01161	0.0116	LBM	0.00038	0.01797	0.0180	LBM
6	Carbon Monoxide	5.86640	7.04640	7.0464	LBM	8.03560	10.05060	10.0506	LBM
7	Chlorine	0.63701	2.51669	2.5167	LBM	0.87643	3.87547	3.8755	LBM
8	Chromium Total	0.00135	0.02033	0.0203	LBM	0.00229	0.03153	0.0315	LBM
9	Chromium +6	0.00007	0.00102	0.0010	LBM	0.00012	0.00158	0.0016	LBM
10	Hydrogen Chloride	20.59651	83.04835	83.0484	LBM	28.33781	127.88693	127.8869	LBM
11	Lead	0.00158	0.19191	0.1919	LBM	0.00357	0.29667	0.2967	LBM
12	Mercury	0.12694	0.69720	0.6972	LBM	0.24529	1.12360	1.1236	LBM
13	Nickel	0.00096	0.01996	0.0200	LBM	0.00198	0.03124	0.0312	LBM
14	Nitrogen Oxides	42.00000	9.52000	42.0000	Coal	57.75000	14.66000	57.7500	Coal
15	Particulate Matter	0.73003	0.78039	0.7804	LBM	1.08214	1.19927	1.1993	LBM
16	Selenium	0.00315	0.95353	0.9535	LBM	0.00542	1.46920	1.4692	LBM
17	Silver	0.00025	0.95225	0.9523	LBM	0.00049	1.46649	1.4665	LBM
18	Sulfur Dioxide	135.24000	158.18400	158.1840	LBM	185.83500	240.46200	240.4620	LBM
19	Thallium	0.04664	1.56880	1.5688	LBM	0.08559	2.42976	2.4298	LBM
20	VOCs	0.00050	0.00084	0.0008	LBM	0.00069	0.00123	0.0012	LBM

NOTES :

1. Pollutant emissions based on conservative assumptions to demonstrate compliance with BIF and ambient air standards even at emission rates greater than permit allowable.

TABLE 4
AIR IMPACTS SUMMARY
FLORIDA SOLITE

Item	Constituent or Pollutant	Kiln 1/1A BH and Kiln 5 BH MAX IMPACT 1-HR (ug/m3)	MAX IMPACT 3-HR (ug/m3)	MAX IMPACT 8-HR (ug/m3)	MAX IMPACT 24-HR (ug/m3)	MAX IMPACT ANNUAL (ug/m3)
A	B	(AD.AH) AJ	(AD.AH) AK	(AD.AH) AL	(AD.AH) AM	(AD.AH) AN
1	Antimony	NS	NS	0.0105	0.0059	0.0005
2	Arsenic	NS	NS	0.0046	0.0026	0.0002
3	Barium	NS	NS	1.0370	0.5828	0.0524
4	Beryllium	NS	NS	0.0063	0.0035	0.0003
5	Cadmium	NS	NS	0.0063	0.0036	0.0003
6	Carbon Monoxide	5.2348	NS	3.6643	2.0594	0.1853
7	Chlorine	NS	NS	1.3700	0.7700	0.0693
8	Chromium Total	NS	NS	0.0111	0.0062	0.0006
9	Chromium +6	NS	NS	0.0006	0.0003	0.0000
10	Hydrogen Chloride	NS	NS	45.2089	25.4084	2.2857
11	Lead	NS	NS	0.1047	0.0589	0.0053
12	Mercury	NS	NS	0.3902	0.2193	0.0197
13	Nickel	NS	NS	0.0110	0.0062	0.0006
14	Nitrogen Oxides	NS	NS	21.3790	12.0155	1.0809
15	Particulate Matter	NS	NS	0.4243	0.2385	0.0215
16	Selenium	NS	NS	0.5193	0.2918	0.0263
17	Silver	NS	NS	0.5184	0.2914	0.0262
18	Sulfur Dioxide	NS	122.0574	85.4402	48.0193	4.3197
19	Thallium	NS	NS	0.8570	0.4817	0.0433
20	VOCs	0.0006	NS	0.0004	0.0002	0.0000

AR c

2.3 E-04

NOTES :

1. The maximum predicted ambient air impacts are based on the highest second-high impacts resulting from ISC2 modeling using five years of Jacksonville meteorological data.
2. Impacts for the 1-hr and 3-hr periods were evaluated only for pollutants with corresponding standards. NS reflects "no standard".

ATTACHMENT 11

DISCUSSION ON FORMATION AND REGULATION
OF DIOXINS AND FURANS

Best Available Copy

indication of combustion conditions than is possible with an NMOC monitor.

Hot Versus Cold HC Monitoring Systems. Except as indicated below, the final rule requires the use of a hot or unconditioned HC monitoring system that must be maintained at a temperature of at least 150 °C until the sample gas exits the detector. See performance specifications in Methods Manual for Compliance with the BIF Regulations (incorporated in today's rule as appendix IX of part 266). Given, however, that the technology has just recently been demonstrated [36] to be continuously operational on hazardous waste combustion devices, the final rule allows the use of a conditioned gas monitoring system during the initial phase of interim status operations. Facilities in interim status that certify compliance with the emission standards for metals, HCl, Cl_2, particulate matter, CO and HC within 18 months of promulgation of the final rule may use a conditioned gas system. Facilities that elect to obtain the automatic 12-month extension (or a case-by-case extension) of the 18-month certification deadline, however, may not use a conditioned gas system because the additional time provided by the extension will also provide time to install an unconditioned HC monitoring system. These facilities must demonstrate compliance with the HC limit using an unconditioned gas monitoring system. Further, facilities that certify initial compliance using a conditioned gas (cold) system must use an unconditioned gas (hot) system when they recertify compliance within three years of certifying initial compliance.

EPA is requiring the use of a hot monitoring system because it represents best demonstrated technology given that a larger fraction of HC emissions can be detected with a hot system. As discussed at proposal, a hot HC monitoring system can detect a substantially larger fraction of hydrocarbon emissions than a cold system. This is because the cold system uses a gas conditioning system that removes semi- and nonvolatile hydrocarbons and a substantial fraction of water-soluble volatile hydrocarbons.

EPA received numerous comments regarding gas conditioning (heated versus unheated) for HC monitoring. Eight commenters are in favor of gas conditioning. The purpose of gas conditioning is to remove moisture from the combustion gases that can degrade instruments or plug sample lines. Sample conditioning, however, can also remove some of the water soluble hydrocarbons and the semi- and nonvolatile hydrocarbons in the flue gas such that methane and other nonhazardous volatile hydrocarbons are frequently the dominant constituents measured by the detector. Some commenters were concerned that fewer PICs would be detected by a conditioned (i.e., cooled) monitoring system. However, one commenter stated that even though the constituents contributing most of the hypothetical risk are relatively nonvolatile they are relatively nondetectable through an unconditioned (heated) monitoring system because of their halogen content.

As discussed at proposal, the Agency is using HC monitoring to implement the technology-based HC limit of 20 ppmv as an indicator of good combustion conditions. The HC monitor is not used in an attempt to quantify organic emissions for risk assessment purposes. Emissions testing has shown that during combustion upset conditions, both the hot and cold HC monitoring systems detect an increase in HC levels because under upset conditions there is a substantial increase in hydrocarbon compounds that are readily detected by either monitoring system.[37]

One commenter suggested that, rather than specifying a range of 40–64 °F for operation on the conditioner as proposed, a specific conditioning temperature (32 °F) should be required to precisely define the conditioned sampling procedure. We agree that a minimum temperature should be specified rather than the range. The final rule allows a conditioned monitoring system during the initial phase of interim status, and requires that the sample gas temperature must be maintained at a minimum of 40 °F at all times prior to discharge from the detector. EPA selected a minimum temperature of 40 °F from the range of 40 to 64 °F to ensure that moisture was effectively removed from the gas sample to preclude plugging and fouling problems with the monitoring system.

Three commenters suggested that the HC limit of 20 ppmv be re-examined because gas conditioning temperatures or other changes in the measurement method may influence the amount of HC measured. Given that the 20 ppmv limit is based primarily on test burn data using heated (i.e., unconditioned) monitoring systems, the Agency considered lowering the 20 ppmv limit when a cold (i.e., conditioned) monitoring system is used. (Limited field test data indicate that a heated system would detect from 30% to 400% more of the mass of organic compounds than a conditioned system.) We believe, however, that the 20 ppmv HC limit is still appropriate when a conditioned system is used because: (1) The data correlating heated vs conditioned systems are very limited; (2) the data on HC emissions are limited (and there apparently is confusion in some cases as to whether the data were taken with a conditioned or unconditioned monitoring system); and (3) the Agency's risk methodology is not sophisticated enough to demonstrate that a HC limit of 5 or 10 ppmv using a conditioned system rather than an unconditioned system is needed to protect human health and the environment. The SAB [38] also concurs with this view. (More detailed responses to comments on this issue are found in a separate background document.)

E. Control of Dioxin and Furan Emissions

For facilities that may have the potential for significant emissions of chlorinated dibenzodioxins and dibenzofurans (CDD/CDF), the final rule requires emissions testing for both interim status and new facilities to determine emissions rates of all tetra-octa congeners, calculation of a toxicity equivalency factor, and dispersion modeling to demonstrate that the predicted maximum annual average ground level concentration (i.e., the hypothetical maximum exposed individual) does not exceed levels that would result in an increased lifetime cancer risk of more than 1 in 100,000.[39] The Agency considers a facility to have the potential for significant CDD/CDF emissions if it is equipped with a dry particulate matter control device (e.g., fabric filter or electrostatic precipitator)

[36] Entropy Environmental Inc., "Evaluation of heated THC Monitoring Systems for Hazardous Waste Incinerator Emission Measurement", Draft Final Report, October 1990; and Shamat, Nadim, et al., "Total Hydrocarbon Analyzer Study", Paper presented at the 83rd Water Pollution Control Federation Conference in Washington, DC, October 8, 1990.

[37] EPA is requiring the use of a hot, unconditioned HC monitoring system (except under certain circumstances during the initial phase of interim status) because hot systems are, nonetheless, more conservative in that they detect a larger fraction of organic compounds in emissions. Further, hot systems represent best demonstrated technology for monitoring HC levels.

[38] U.S. EPA, "Report of the Products of Incomplete Combustion Subcommittee of the Science Advisory Board", Report # EPA-SAB-EC-90-004, January 1990.

[39] EPA is not requiring that the estimated cancer risk from CDD/CDF be added to the risk from metal emissions to demonstrate that the summed risk to the maximum exposed individual is less than 10^{-4}. The Agency believes that it is inappropriate to sum the estimated health risk from metals that are known or probable human carcinogens with a toxicity equivalency factor for CDD/CDF that is designed to be very conservative.

Best Available Copy

with an inlet gas temperature within the range of 450 to 750 °F, or if it is an industrial furnace that has hydrocarbon levels exceeding 20 ppmv. See § 266.104.

Dispersion modeling must be conducted in conformance with EPA's "Hazardous Waste Combustion Air Quality Screening Procedure" provided in Methods Manual for Compliance with the BIF Regulations or EPA's Guideline on Air Quality Models (Revised) which are incorporated in today's rule as appendices IX and X, respectively, of part 266, or "EPA SCREEN Screening Procedure" as described in Screening Procedures for Estimating Air Quality Impact of Stationary Sources. The latter document is incorporated by reference in today's final rule at § 260.11. To evaluate potential cancer risk from the congeners, prescribed procedures must be used to estimate the 2,3,7,8-TCDD toxicity equivalence of 2,3,7,8-chlorinated congeners. See "Procedures for Estimating Toxicity Equivalence of Chlorinated Dibenzo-p-Dioxin and Dibenzofuran Congeners" in Methods Manual for Compliance with the BIF Regulations incorporated in the rule as appendix IX of part 266.

Studies conducted by the Agency [40] and others [41] during development of regulations for municipal waste combustors (MWCs) concluded that PM control devices operated at temperatures greater than 450 °F have the potential for emitting elevated levels of CDD/CDF. At these temperatures, precursor organic materials and chlorine in the flue gas can be catalyzed by PM captured in the PM collection device to form CDD/CDF. Based on these findings, the Agency proposed to restrict the combustion of hazardous waste in BIFs that operate with PM control device temperatures greater than 450 °F.

A number of commenters opposed the proposed limitation on the flue gas temperature to less than 450 °F. Several commenters pointed out technical distinctions among types of boilers and industrial furnaces that affect the ability of a unit to change flue gas temperature and the potential of an ESP to form CDD/CDF. For example, many boiler and industrial furnaces either combust wastes that are very low in chlorine or that have high levels of chlorine capture within the process (e.g., cement kilns). As a result, the CDD/CDF emission potential will vary for different boilers and industrial furnaces, as well as between boilers and industrial furnaces and MWCs. Commenters also stated that there is no direct evidence of CDD/CDF emissions from several types of boilers and industrial furnaces, and that compliance testing to demonstrate 99.99 percent DRE of POHCs and continuous monitoring of CO and HC levels is adequate to ensure minimal emissions of organic compounds.

The Agency has reviewed the available data on the theory of CDD/CDF formation as well as CDD/CDF emissions from BIFs. Based on this review, the Agency agrees that most, but not necessarily all, BIFs burning hazardous waste have low CDD/CDF emission rates. For example, EPA recently tested a cement kiln burning hazardous waste that operates with an ESP at a temperature of 500–500 °F and found it to have relatively high CDD/CDF emissions.[42] (EPA conducted a risk assessment, however, that estimated the increased lifetime cancer risk to the hypothetical maximum exposed individual from the CDD/CDF emissions ranged from 7 in 10,000,000 to 2 in 1,000,000 without burning hazardous waste and from 2 in 1,000,000 to 4 in 1,000,000 when burning hazardous waste, well under the 1 in 100,000 limit established in today's rule.) The Agency suspects that the elevated CDD/CDF concentrations in the stack gas at this cement kiln are the result of the ESP's operating temperature and the level of HC precursor material in the flue gas. HC concentrations ranged from 66 to 70 ppmv (measured with a hot system, reported as propane, and corrected to 7% oxygen, dry basis) without hazardous waste burning and from 38 ppmv to 63 ppmv with hazardous waste burning. (We note that to continue burning hazardous waste under today's rule, the Director must establish during the part B permit proceedings an alternative HC level for this kiln based on a demonstration by the applicant that HC levels are not higher when burning hazardous waste than under normal conditions and that the facility is designed and operated to minimize HC emissions from all sources—fuels and raw materials. At certification of compliance with the emissions controls other than the HC limit, this facility must also propose a HC concentration limit for the remainder of interim status (until that limit or another limit is established under permit proceedings) that will ensure that HC levels when hazardous waste is burned will not be higher than baseline levels (i.e., HC levels when the system is designed and operated to minimize HC emissions from all sources, when burning normal fuels and feeding normal raw materials to produce normal products, and when not burning hazardous waste).) In addition, trial burn emissions testing must demonstrate that emissions of organic compounds are not likely to result in an increased lifetime cancer risk to the hypothetical maximum exposed individual exceeding 1 in 100,000. See § 266.104(f) and discussion in section II.B.4.b of part three of this preamble.) There may be other factors that influence CDD/CDF levels at this facility (and other facilities), but this is uncertain. In addition, the exact HC concentration in combustion gas below which elevated CDD/CDF concentrations will not occur is unknown.

The Agency continues to believe that the operating temperature of the PM control device (and HC concentrations in flue gas) plays a significant role in CDD/CDF emissions. For a given HC concentration in the flue gas, the available data suggest that the potential for elevated CDD/CDF emissions is low if the PM control device operates at temperatures of less than 450 °F or above 750 °F. Consequently, today's rule does not require BIFs with PM control devices operating at temperatures outside of the 450–750 °F window to determine CDD/CDF emission rates (unless it is an industrial furnace with HC levels greater than 20 ppmv). Owners and operators of units operating within the temperature window, however, are required to conduct stack testing to determine CDD/CDF emission rates and to conduct a risk assessment using prescribed procedures to demonstrate that the estimated increased lifetime cancer risk to the hypothetical maximum exposed individual is less than 1 in 100,000.

The Agency notes that the final rule municipal waste combustors (MWCs) may take a slightly different approach to control dioxin and furans by limiting temperatures at the inlet of the PM air pollution control system to within 30 °F of those achieved in a dioxin/furan compliance test. The preamble to that rule, however, will probably continue to note the possibility of dioxin/furan formation in the temperature range of 230 °C (450 °F). In today's rule, the Agency believes that using temperature and HC levels as a trigger to dioxin/furan testing and risk assessment will be fully protective of human health and the

[40] See U.S. EPA, "Municipal Waste Combustion Study: Combustion Control of Organic Emissions", EPA/530-SW-87-021C, NTIS Order No. PB87-206080; U.S. EPA, "Municipal Waste Combustion Study: Flue Gas Cleaning Technology", EPA/530-SW-87-021D, NTIS Order No. PB87-206108; and 54 FR 52251 (December 20, 1989).

[41] Vogg H. and L. Stieglitz, "Thermal Behavior of PCDD/PCDF in Fly Ash from Municipal Waste Incinerators", Chemosphere, pp. 1373–1378, 1986.

[42] U.S. EPA, Emissions Testing of a Wet Cement Kiln at Hannibal, MO, December 1990.

Florida Department of Environmental Regulation
Twin Towers Office Bldg. • 2600 Blair Stone Road • Tallahassee, Florida 32399-2400
Lawton Chiles, Governor
Carol M. Browner, Secretary

December 22, 1992

CERTIFIED MAIL - RETURN RECEIPT REQUESTED

Mr. Tony Saunders, Plant Manager
Florida Solite Company
P. O. Box 297
Green Cove Springs, FL 32043

Dear Mr. Saunders:

Re: File No. AC10-222486, Clay Kilns Nos. 1, 1A, and 5

The Department has reviewed your application for permit to install ducts connecting Kilns Nos. 1 and 1A to the proposed baghouse for Kiln No. 5. Before we can process this application, the Department will need additional information to determine if the modified facility will comply with the air and other applicable regulations. The Department will need the following information:

1. A copy of approved Permit No. AC10-197099 (proposed baghouse for Kiln No. 5) or plans/specification for another air pollution control system to control the emissions from Kilns Nos. 1 and 1A. (This action cannot be completed until proposed permit AC10-197099 is issued.)

2. Brochure or specification for the baghouse under consideration to control the emissions from the kilns.

3. Will any proposed baghouse have a bypass stack? If so, what are the maximum emissions of the criteria and noncriteria pollutants when the baghouse is being bypassed? What is the maximum ambient air impact of these emissions? What is the maximum duration of the bypass?

4. Describe the operation and maintenance of the hazardous waste fuel system and air pollution control system.

5. Describe the automatic LBM feed cutoff system.

6. How will the process/production rates of each kiln be determined? Please provide a brochure/specification for any proposed scale.

7. Provide a description and drawing of the handling and disposal system for the captured clay/lime fines.

Recycled Paper
Printed with Soy Based Inks

8. Provide brochures, specifications, and drawings for any monitors (CO, temperature, pressure drop, etc.) that will be installed on the kilns.

9. Will the currently required sulfur dioxide continuous emissions monitor at this facility be relocated as part of the proposed modification?

10. Please provide a copy of the study showing that the sulfur dioxide emissions from the kiln as determined by a continuous emission monitor can be accurately estimated by a material balance. What is the maximum sulfur content in the clay?

11. What alternative methods to monitor sulfur dioxide emissions from this facility will be used should the material balance proposal be found to be unreliable?

12. What means will be used to contain and minimize fugitive emissions from LBM caused by any spills during handling or equipment failure?

13. Please explain why you concluded the new source performance standards for nonmetallic mineral processing plants (40 CFR 60, Subpart 000) does not apply to this facility.

14. Please explain why you concluded the NESHAP for beryllium and equipment leaks (40 CFR 61, Subparts C and J) does not apply to this facility.

15. Who supplies LBM to this facility?

16. Provide a description of the LBM sampling and analysis program. What analyses are run on the LBM received by Florida Solite Company and by who? Describe frequency of analyses.

17. What chemicals and metals are in the LBM and what is the maximum concentration of these pollutants?

18. What is the lowest sulfur content of No. 2 fuel oil that the fuel supplier will guarantee to the applicant?

19. Please estimate the emissions of dioxins and furans from this facility.

20. Please provide a table showing the maximum emissions of criteria and noncriteria pollutants from the proposed baghouse for Kiln No. 5 (summary of what is in current application).

21. Please provide a table showing the maximum emissions of criteria and noncriteria pollutants from the scrubbers.

22. What is the maximum ambient air impact from the facility when one kiln is burning LBM and the other two kilns are using the scrubbers and when all three kilns are using the scrubbers? Please use the time periods in the regulations/policy, i.e. - 8-hr, 24-hr, and annual impacts for toxics; 3-hr, 24-hr, and annual impacts for sulfur dioxide; 30-day for beryllium, etc.

23. Please perform a health risk analysis based on the maximum impacts of the emissions of the toxic components.

24. Are any metals or chlorides in the clay? How are these constituents determined? What is the frequency of analysis?

25. Were the metals in the clay, coal being burned in the other kiln, and metals in the recycle clay/lime fines considered in calculating the maximum metals and chlorides that could be in the LBM?

26. Please provide a copy of the proposed trial burn for this facility.

27. Please provide a copy of the RCRA application for this facility or note to whom within the Department the application was submitted.

The Department will resume processing this application after receipt of the requested information. In the meantime, please publish the attached Notice of Application pursuant to F.A.C. Rule 17-103.150.

If you have any questions on this matter, please write to me or call Willard Hanks at (904) 488-1344.

Sincerely,

John C. Brown, Jr.

John C. Brown, Jr., P.E.
Administrator
Air Permitting and Standards

JCB/WH/plm

cc: Andy Kutyna, NED
John Koogler, P.E.

Notice of Application

The Department of Environmental Regulation announces receipt of an application for permit from Florida Solite to connect Kilns Nos. 1 and 1A to the proposed baghouse and lime injection system that will control the emissions from Kiln No. 5 when it is burning LBM (liquid hazardous waste burnable material) containing up to 50 ppm PCBs. This proposed project will be located on County Road 209A, north of Green Cove Springs in Clay County.

The application is being processed and is available for public inspection during normal business hours, 8:00 a.m. to 5:00 p.m., Monday through Friday, except legal holidays, at the Department's Bureau of Air Regulation located at 2600 Blair Stone Road, Tallahassee, Florida 32399-2400.

Florida Department of Environmental Regulation
Twin Towers Office Bldg. • 2600 Blair Stone Road • Tallahassee, Florida 32399-2400
Lawton Chiles, Governor
Carol M. Browner, Secretary

December 22, 1992

CERTIFIED MAIL - RETURN RECEIPT REQUESTED

Mr. Tony Saunders, Plant Manager
Florida Solite Company
P. O. Box 297
Green Cove Springs, FL 32043

Dear Mr. Saunders:

Re: File No. AC10-222486, Clay Kilns Nos. 1, 1A, and 5

The Department has reviewed your application for permit to install ducts connecting Kilns Nos. 1 and 1A to the proposed baghouse for Kiln No. 5. Before we can process this application, the Department will need additional information to determine if the modified facility will comply with the air and other applicable regulations. The Department will need the following information:

1. A copy of approved Permit No. AC10-197099 (proposed baghouse for Kiln No. 5) or plans/specification for another air pollution control system to control the emissions from Kilns Nos. 1 and 1A. (This action cannot be completed until proposed permit AC10-197099 is issued.)

Permit

2. Brochure or specification for the baghouse under consideration to control the emissions from the kilns.

Specs

3. Will any proposed baghouse have a bypass stack? If so, what are the maximum emissions of the criteria and noncriteria pollutants when the baghouse is being bypassed? What is the maximum ambient air impact of these emissions? What is the maximum duration of the bypass?

NO BY-PASS STACK

4. Describe the operation and maintenance of the hazardous waste fuel system and air pollution control system.

5. Describe the automatic LBM feed cut off system.

6. How will the process/production rates of each kiln be determined? Please provide a brochure/specification for any proposed scale.

SPEC only 1st Process Plan (1/c)

7. Provide a description and drawing of the handling and disposal system for the captured clay/lime fines.

(1/c) MINOR CLARIFICATION NEEDED

Recycled Paper
Printed with Soy Based Inks

(1/C) WAITING INFO TEMP/ Pressure Monitors 8. Provide brochures, specifications, and drawings for any monitors (CO, temperature, pressure drop, etc.) that will be installed on the kilns.

✓ (NO) 9. Will the currently required sulfur dioxide continuous emissions monitor at this facility be relocated as part of the proposed modification?

(1/C) NOT DONE NEED KILNS BH 10. Please provide a copy of the study showing that the sulfur dioxide emissions from the kiln as determined by a continuous emission monitor can be accurately estimated by a material balance. What is the maximum sulfur content in the clay?

✓ 11. What alternative methods to monitor sulfur dioxide emissions from this facility will be used should the material balance proposal be found to be unreliable?

✓ 12. What means will be used to contain and minimize fugitive emissions from LBM caused by any spills during handling or equipment failure?

✓ 13. Please explain why you concluded the new source performance standards for nonmetallic mineral processing plants (40 CFR 60, Subpart 000) does not apply to this facility.

✓ 14. Please explain why you concluded the NESHAP for beryllium and equipment leaks (40 CFR 61, Subparts C and J) does not apply to this facility.

✓ 15. Who supplies LBM to this facility?

✓ 16. Provide a description of the LBM sampling and analysis program. What analyses are run on the LBM received by Florida Solite Company and by who? Describe frequency of analyses.

✓ 17. What chemicals and metals are in the LBM and what is the maximum concentration of these pollutants?

✓ 18. What is the lowest sulfur content of No. 2 fuel oil that the fuel supplier will guarantee to the applicant?
0.7% S !

✓ 19. Please estimate the emissions of dioxins and furans from this facility.
No est but below 450°F @ BH

✓ (NOT CHECKED) 20. Please provide a table showing the maximum emissions of criteria and noncriteria pollutants from the proposed baghouse for Kiln No. 5 (summary of what is in current application).

— 21. Please provide a table showing the maximum emissions of criteria and noncriteria pollutants from the scrubbers.
SAID NOT NEEDED — OK IF MODELING ADDRESSED (SEE 22)

✓ 22. What is the maximum ambient air impact from the facility when one kiln is burning LBM and the other two kilns are using the scrubbers and when all three kilns are using the scrubbers? Please use the time periods in the regulations/policy, i.e. - 8-hr, 24-hr, and annual impacts for toxics; 3-hr, 24-hr, and annual impacts for sulfur dioxide; 30-day for beryllium, etc.
CLEVE NEEDS CHECK

— 23. Please perform a health risk analysis based on the maximum impacts of the emissions of the toxic components.
John needs Check

✓ 24. Are any metals or chlorides in the clay? How are these constituents determined? What is the frequency of analysis?

✓ 25. Were the metals in the clay, coal being burned in the other kiln, and metals in the recycle clay/lime fines considered in calculating the maximum metals and chlorides that could be in the LBM?

(1c) 26. Please provide a copy of the proposed trial burn for this facility.
Will be submitted by 11/30/92

✓ 27. Please provide a copy of the RCRA application for this facility or note to whom within the Department the application was submitted.

The Department will resume processing this application after receipt of the requested information. In the meantime, please publish the attached Notice of Application pursuant to F.A.C. Rule 17-103.150.
(1c) Proof of publication →

If you have any questions on this matter, please write to me or call Willard Hanks at (904) 488-1344.

Sincerely,

John C. Brown, Jr.

John C. Brown, Jr., P.E.
Administrator
Air Permitting and Standards

JCB/WH/plm

cc: Andy Kutyna, NED
John Koogler, P.E.

Best Available Copy

Notice of Application

The Department of Environmental Regulation announces receipt of an application for permit from Florida Solite to connect Kilns Nos. 1 and 1A to the proposed baghouse and lime injection system that will control the emissions from Kiln No. 5 when it is burning LBM (liquid hazardous waste burnable material) containing up to 50 ppm PCBs. This proposed project will be located on County Road 209A, north of Green Cove Springs in Clay County.

The application is being processed and is available for public inspection during normal business hours, 8:00 a.m. to 5:00 p.m., Monday through Friday, except legal holidays, at the Department's Bureau of Air Regulation located at 2600 Blair Stone Road, Tallahassee, Florida 32399-2400.

P 062 921 938

Receipt for Certified Mail

UNITED STATES POSTAL SERVICE

No Insurance Coverage Provided
Do not use for International Mail
(See Reverse)

Sent to Tony Saunders	
Street and No. 91A. Solite	
P.O., State and ZIP Code Green Cove Sp., Fl	
Postage	$
Certified Fee	
Special Delivery Fee	
Restricted Delivery Fee	
Return Receipt Showing to Whom & Date Delivered	
Return Receipt Showing to Whom, Date, and Addressee's Address	
TOTAL Postage & Fees	$
Postmark or Date 12-22-92 AC 10-222486	

PS Form 3800, June 1991

SENDER: Complete items 1, 2, 3 and 4.

Put your address in the "RETURN TO" space on the reverse side. Failure to do this will prevent this card from being returned to you. The return receipt fee will provide you the name of the person delivered to and the date of delivery. For additional fees the following services are available. Consult postmaster for fees and check box(es) for service(s) requested.

1. ☐ Show to whom, date and address of delivery.
2. ☐ Restricted Delivery.

3. Article Addressed to:
Tony Saunders, Plant Mgr
Fla. Solite Co
PO Box 297
Green Cove Springs, Fl 32043

4. Type of Service:
☐ Registered ☐ Insured
☐ Certified ☐ COD
☐ Express Mail

Article Number
P062 921 938

Always obtain signature of addressee or agent and DATE DELIVERED.

5. Signature — Addressee
X

6. Signature — Agent
X

7. Date of Delivery

8. Addressee's Address (ONLY if requested and fee paid)

DOMESTIC RETURN RECEIPT

PS Form 3811, July 1988

Fold at line over top of envelope to the

KOOGLER & ASSOCIATES
ENVIRONMENTAL SERVICES
4014 NW THIRTEENTH STREET
GAINESVILLE, FLORIDA 32609
904/377-5822 ▪ FAX 377-7158

RECEIVED
NOV 30 1992
Bureau of
Air Regulation

KA 150-90-07

November 18, 1992

RECEIVED
DER - MAIL ROOM
1992 NOV 30 PM 1:05

Mr. Clair H. Fancy
Florida Department of
Environmental Regulation
Twin Towers Office Building
2600 Blair Stone Road
Tallahassee, FL 32399-2400

Subject: Air Construction Permit Application for Installation of Ductwork for Kilns 1 and 1A to Allow Use of Baghouse
Florida Solite Company
Green Cove Springs, Clay County, Florida

Dear Mr. Fancy:

Enclosed are four copies of the air construction permit application for the installation of ductwork for existing Kilns 1 and 1A located at the Florida Solite Company facility in Green Cove Springs, Clay County, Florida. A check in the amount of $250 (permit processing fee) is also enclosed.

The installation of the ductwork will allow Kilns 1 and 1A to use the baghouse (permitted recently by FDER under permit No. AC10-197099) as an alternate particulate matter control device (alternate to the existing scrubber).

The use of the baghouse in place of the scrubber, while burning LBM, is necessary to meet the particulate matter emission limits for boilers and industrial furnaces under RCRA regulations.

No other changes in the operation of the sources are requested.

If you have any questions, please do not hesitate to contact me.

Very truly yours,

KOOGLER & ASSOCIATES

John B. Koogler, Ph.D., P.E.

JBK:wa
Enc.

c: Mr. Tony Saunders, Florida Solite
Mr. Albert Galliano, Florida Solite
Mr. George Williamson, Solite
H. Handa
A. Kutyna, NE Dist

KOOGLER & ASSOCIATES

FLORIDA SOLITE CO. 12-73
PETTY CASH ACCOUNT
P. O. BOX 297
GREEN COVE SPRINGS, FL 32043

1829

63-2
630 29

NOVEMBER 24 19 92

PAY TO THE ORDER OF FLORIDA DEPARTMENT OF ENVIRONMENTAL REGULATIONS $ 250.00

TWO HUNDRED FIFTY AND 00/100---------- DOLLARS

© HARLAND 1989

FIRST UNION
First Union National Bank of Florida
Green Cove Springs, Florida 32043

FOR CONSTRUCTION PERMIT 1 & 1A

Mirian Robertson

[redacted]

Original check was sent to F&A on ~~11-3~~ 12-1-93
Barb
(mailroom)

STATE OF FLORIDA
DEPARTMENT OF ENVIRONMENTAL REGULATION

$250 pd. 11-30-92 Recpt. # 150821

NORTHWEST DISTRICT
160 GOVERNMENTAL CENTER
PENSACOLA, FLORIDA 32501-5794

AC 10-222486

BOB MARTINEZ
GOVERNOR
DALE TWACHTMANN
SECRETARY
ROBERT V. KRIEGEL
DISTRICT MANAGER

SOURCE TYPE: Lightweight Aggregate Kiln [ ] New[1] [x] Existing[1]

APPLICATION TYPE: [x] Construction [ ] Operation [x] Modification

COMPANY NAME: Florida Solite Company COUNTY: Clay

Identify the specific emission point source(s) addressed in this application (i.e. Lime Kiln No. 4 with Venturi Scrubber; Peaking Unit No. 2, Gas Fired) Kilns 1 and 1A

SOURCE LOCATION: Street CR209A, north of Green Cove Springs City Green Cove Springs

UTM: East (17) 427.3 km North 3326.5 km

Latitude 30 ° 04 ' 07 "N Longitude 81 ° 45 ' 17 "W

APPLICANT NAME AND TITLE: Tony Saunders, Plant Manager

APPLICANT ADDRESS: P.O. Box 297, Green Cove Springs, Florida 32043

SECTION I: STATEMENTS BY APPLICANT AND ENGINEER

A. APPLICANT

I am the undersigned owner or authorized representative* of Florida Solite Company

I certify that the statements made in this application for a construction permit are true, correct and complete to the best of my knowledge and belief. Further, I agree to maintain and operate the pollution control source and pollution control facilities in such a manner as to comply with the provision of Chapter 403, Florida Statutes, and all the rules and regulations of the department and revisions thereof. I also understand that a permit, if granted by the department, will be non-transferable and I will promptly notify the department upon sale or legal transfer of the permitted establishment.

*Attach letter of authorization

Signed: Tony Saunders

Tony Saunders, Plant Manager
Name and Title (Please Type)

Date: 11-24-92 Telephone No. (904) 284-9271

B. PROFESSIONAL ENGINEER REGISTERED IN FLORIDA (where required by Chapter 471, F.S.)

This is to certify that the engineering features of this pollution control project have been ~~designed~~/examined by me and found to be in conformity with modern engineering principles applicable to the treatment and disposal of pollutants characterized in the permit application. There is reasonable assurance, in my professional judgment, that

[1] See Florida Administrative Code Rule 17-2.100(57) and (104)

the pollution control facilities, when properly maintained and operated, will discharge an effluent that complies with all applicable statutes of the State of Florida and the rules and regulations of the department. It is also agreed that the undersigned will furnish, if authorized by the owner, the applicant a set of instructions for the proper maintenance and operation of the pollution control facilities and, if applicable, pollution sources.

Signed _____

John B. Koogler, Ph.D., P.E.
Name (Please Type)

Koogler & Associates, Environmental Services
Company Name (Please Type)

4014 N.W. 13th Street, Gainesville, FL 32609
Mailing Address (Please Type)

Florida Registration No. 12925 Date: 11/18/92 Telephone No. (904) 377-5822

SECTION II: GENERAL PROJECT INFORMATION

A. Describe the nature and extent of the project. Refer to pollution control equipment, and expected improvements in source performance as a result of installation. State whether the project will result in full compliance. Attach additional sheet if necessary.

For the construction of ductwork allowing the use of a baghouse as an alternate particulate matter control device (alternate to the existing scubber) for Kilns 1 and 1A. The same baghouse (permitted under AC10-197099) will be used by Kiln 5. The project will be in full compliance with the applicable air regulations.

B. Schedule of project covered in this application (Construction Permit Application Only)

Start of Construction March 1993 Completion of Construction March 1994

C. Costs of pollution control system(s): (Note: Show breakdown of estimated costs only for individual components/units of the project serving pollution control purposes. Information on actual costs shall be furnished with the application for operation permit.)

Approximate cost of all ductwork - $ 100,000

D. Indicate any previous DER permits, orders and notices associated with the emission point, including permit issuance and expiration dates.

Kiln 1: A010-154570; Issued 2-14-89; Expires 2-14-93.

Kiln 1A: A010-133604; Issued 2-1-91; Expires 8-1-95.

Kiln 5: A010-198326; Issued 12-18-91; Expires 8-19-96.

SECTION II - PROJECT INFORMATION

Florida Solite Company operates a lightweight aggregate production facility near Green Cove Springs, Clay County, Florida. The facility is located on CR209A north of Green Cove Springs. The UTM coordinates of the facility are Zone 17, 427.3 km east and 3326.5 km north.

The existing facility processes clay into lightweight aggregate which is used in the construction industry. The clay is typically heated to 1900-2100°F in a rotary kiln to promote heat activated reactions causing the clay to expand resulting in a lightweight aggregate. Solite operates three kilns at the Green Cove Springs facility, Kilns 1, 1A and 5.

The proposed project involves the installation of ductwork to a baghouse to be shared by Kilns 1, 1A and 5. Although all kilns will be ducted to the baghouse, only one kiln will use the baghouse at a time. The existing particulate matter control device consisting of the water spray scrubbers will be retained as an alternate control system. Kilns 1, 1A and 5 are permitted at an aggregate production rate of 7, 7 and 11 tons per hour, respectively. The kilns are fired on coal and liquid burnable material (LBM). The use of the baghouse in place of the water scrubber, while burning LBM, is necessary to meet the particulate matter limits for boilers and industrial furnaces under RCRA regulations effective August 1991. The recently issued construction permit No. AC10-197099 allows the installation of a baghouse, clay fines system, and lime injection system.

A pneumatic system, permitted under AC10-197099, will convey the clay fines collected in the baghouse to a storage bin equipped with a dust collector.

Another pneumatic system, permitted under AC10-197099, is the lime system. Hydrated lime will be received in trucks and pneumatically conveyed to a storage bin. The lime bin will be equipped with a dust collector and a blower. As needed the lime will be withdrawn from the bin and injected into the duct preceding the baghouse.

The use of a baghouse will result in a net decrease in the allowable particulate matter emissions from Kilns 1, 1A and 5 when they are operating on LBM.

Lime will be injected at a rate, to be determined during compliance testing, to assure compliance with permitted SO_2 emission limits. The sulfur material balance issues discussed in the Kiln 5 permit application review will also apply to Kilns 1 and 1A (see Attachment 1).

The baghouse/lime injection system is also expected to reduce emissions of non-criteria pollutants. Testing will be conducted at some time in the near future to determine control efficiencies and emission rates as required by RCRA regulations.

The alternate use of the scrubber or baghouse at a given time for a given fuel will be coordinated by computer controls to ensure proper damper position.

The proposed project will result in full compliance with all applicable regulations. A separate baghouse and lime injection system may be installed some time in the future, with FDER approval, for Kilns 1 and 1A.

E. Requested permitted equipment operating time: hrs/day 24 ; days/wk 7 ; wks/yr 52 ;

if power plant, hrs/yr_____; if seasonal, describe: 8760 hrs/yr for Kiln 1.

Kiln 1A is restricted to 7600 hours per year operation (24 hrs/day ; 7 days/wk ; and

45.2 wks/yr)

F. If this is a new source or major modification, answer the following questions. (Yes or No)

1. Is this source in a non-attainment area for a particular pollutant? NO

   a. If yes, has "offset" been applied? NA

   b. If yes, has "Lowest Achievable Emission Rate" been applied? NA

   c. If yes, list non-attainment pollutants. NA

2. Does best available control technology (BACT) apply to this source? If yes, see Section VI. NO

3. Does the State "Prevention of Significant Deterioriation" (PSD) requirement apply to this source? If yes, see Sections VI and VII. NO

4. Do "Standards of Performance for New Stationary Sources" (NSPS) apply to this source? NO

5. Do "National Emission Standards for Hazardous Air Pollutants" (NESHAP) apply to this source? NO

H. Do "Reasonably Available Control Technology" (RACT) requirements apply to this source? NO

   a. If yes, for what pollutants? NA

   b. If yes, in addition to the information required in this form, any information requested in Rule 17-2.650 must be submitted.

Attach all supportive information related to any answer of "Yes". Attach any justification for any answer of "No" that might be considered questionable.

KILN 1

SECTION III: AIR POLLUTION SOURCES & CONTROL DEVICES (Other than Incinerators)

A. Raw Materials and Chemicals Used in your Process, if applicable:

Description	Contaminants		Utilization Rate - lbs/hr	Relate to Flow Diagram
	Type	% Wt		
Wet Clay	-	-	28,800	

B. Process Rate, if applicable: (See Section V, Item 1)

1. Total Process Input Rate (lbs/hr): 17,200 (dry basis)

2. Product Weight (lbs/hr): 14,000

C. Airborne Contaminants Emitted: (Information in this table must be submitted for each emission point, use additional sheets as necessary)

Name of Contaminant	Emission[1]		Allowed[2] Emission Rate per Rule 17-2	Allowable[3] Emission lbs/hr	Potential[4] Emission		Relate to Flow Diagram
	Maximum lbs/hr	Actual T/yr			lbs/hr	T/yr	
Part. Matter	11.8	51.5	-	-	490.0	2146.2	
SO_2 (avg)	84.0	367.9	-	-	84.0	367.9	
NOx	15.3	67.0	-	-	15.3	67.0	
CO	7.5	32.8	-	-	7.5	32.8	
VOC	11.0	48.1	-	-	11.0	48.1	

[1] See Section V, Item 2.

[2] Reference applicable emission standards and units (e.g. Rule 17-2.600(5)(b)2. Table II, E. (1) - 0.1 pounds per million BTU heat input)

[3] Calculated from operating rate and applicable standard.

[4] Emission, if source operated without control (See Section V, Item 3).

KILN 1A

SECTION III: AIR POLLUTION SOURCES & CONTROL DEVICES (Other than Incinerators)

A. Raw Materials and Chemicals Used in your Process, if applicable:

Description	Contaminants		Utilization Rate - lbs/hr	Relate to Flow Diagram
	Type	% Wt		
Wet Clay	-	-	28,800	

B. Process Rate, if applicable: (See Section V, Item 1)

1. Total Process Input Rate (lbs/hr): 17,200 (dry basis)

2. Product Weight (lbs/hr): 14,000

C. Airborne Contaminants Emitted: (Information in this table must be submitted for each emission point, use additional sheets as necessary)

Name of Contaminant	Emission[1]		Allowed[2] Emission Rate per Rule 17-2	Allowable[3] Emission lbs/hr	Potential[4] Emission		Relate to Flow Diagram
	Maximum lbs/hr	Actual T/yr			lbs/hr	T/yr	
Part. Matter	11.8	44.7	-	-	490.0	1862.0	
SO_2 (avg)	75.8	288.0	-	-	75.8	288.0	
NOx	14.2	54.0	-	-	14.2	54.0	
CO	7.5	28.4	-	-	7.5	28.4	
VOC	11.0	41.7	-	-	11.0	41.7	

NOTE: Annual emissions are based on 7600 hrs/yr operation.

[1]See Section V, Item 2.

[2]Reference applicable emission standards and units (e.g. Rule 17-2.600(5)(b)2. Table II, E. (1) - 0.1 pounds per million BTU heat input)

[3]Calculated from operating rate and applicable standard.

[4]Emission, if source operated without control (See Section V, Item 3).

KILN 1

D. Control Devices: (See Section V, Item 4)

Name and Type (Model & Serial Nos. Not Finalized)	Contaminant	Efficiency	Range of Particles Size Collected (in microns) (If applicable)	Basis for Efficiency (Section V Item 5)
Baghouse - Kiln	PM	99%	> 2	Estimate
Baghouse - Clay Fines Bin	PM	99%	>2	Estimate
Baghouse - Lime Bin	PM	99%	>2	Estimate

E. Fuels See page 5c of 12

Type (Be Specific)	Consumption*		Maximum Heat Input (MMBTU/hr)
	avg/hr	max./hr	
Coal		2625 lbs/hr	31.5
LBM		315 gals/hr	31.5
No. 2 Fuel Oil		225 gals/hr	31.5
Propane		344 gals/hr	31.5

*Units: Natural Gas--MMCF/hr; Fuel Oils--gallons/hr; Coal, wood, refuse, other--lbs/hr.

Fuel Analysis:

Percent Sulfur: _____ Percent Ash: _____

Density: _____ lbs/gal Typical Percent Nitrogen: _____

Heat Capacity: _____ BTU/lb _____ BTU/gal

Other Fuel Contaminants (which may cause air pollution): _____

F. If applicable, indicate the percent of fuel used for space heating. NA

Annual Average _____ Maximum _____

G. Indicate liquid or solid wastes generated and method of disposal.

Solids collected are recycled.

KILN 1A

D. Control Devices: (See Section V, Item 4)

Name and Type (Model & Serial Nos Not Finalized)	Contaminant	Efficiency	Range of Particles Size Collected (in microns) (If applicable)	Basis for Efficiency (Section V Item 5)
Baghouse - Kiln	PM	99%	>2	Estimate
Baghouse - Clay Fines Bin	PM	99%	>2	Estimate
Baghouse - Lime Bin	PM	99%	>2	Estimate

E. Fuels See page 5c of 12

Type (Be Specific)	Consumption*		Maximum Heat Input (MMBTU/hr)
	avg/hr	max./hr	
Coal		4000 lbs/hr	47.6
LBM		476 gals/hr	47.6
No. 2 Fuel Oil		340 gals/hr	47.6
Propane		520 gals/hr	47.6

*Units: Natural Gas--MMCF/hr; Fuel Oils--gallons/hr; Coal, wood, refuse, other--lbs/hr.

Fuel Analysis:

Percent Sulfur: _____ Percent Ash: _____

Density: _____ lbs/gal Typical Percent Nitrogen: _____

Heat Capacity: _____ BTU/lb _____ BTU/gal

Other Fuel Contaminants (which may cause air pollution): _____

F. If applicable, indicate the percent of fuel used for space heating. NA

Annual Average _____ Maximum _____

G. Indicate liquid or solid wastes generated and method of disposal.

Solids collected are recycled.

FUEL ANALYSES

COAL

Heat Value	12,000 Btu/lb
Moisture, max	10%
Ash, max	12%
Volatile, min	32%
Sulfur	1.5%
Fusion Temperature	2200°F
Hargrove Grindability Index No., max	55

LBM (typical average)

Heat Value	100,000 Btu/gal
Specific Gravity	0.96
Water	15%
Ash	10%
Sulfur	0.2%
Chlorides	1.3%
PCB	< 50 ppm
Antimony	48 ppm
Arsenic	28 ppm
Barium	646 ppm
Cadmium	21 ppm
Chromium	155 ppm
Lead	385 ppm

NO. 2 FUEL OIL

Heat Value	140,000 BTU/gal
Density	7.2 lbs/gal
Sulfur	0.7% max.

Propane

Heat Value	91,500 BTU/gal

KILN 1 / 1A

H. Emission Stack Geometry and Flow Characteristics (Provide data for each stack):

Stack Height: 65 ft. Stack Diameter: 5 ft.

Gas Flow Rate: 78,400 ACFM 40,000 DSCFM Gas Exit Temperature: 420 °F.

Water Vapor Content: 15 % Velocity: 67 FPS

SECTION IV: INCINERATOR INFORMATION

NOT APPLICABLE

Type of Waste	Type 0 (Plastics)	Type I (Rubbish)	Type II (Refuse)	Type III (Garbage)	Type IV (Pathological)	Type V (Liq.& Gas By-prod.)	Type VI (Solid By-prod.)
Actual lb/hr Incinerated							
Uncontrolled (lbs/hr)							

Description of Waste _____

Total Weight Incinerated (lbs/hr) _____ Design Capacity (lbs/hr) _____

Approximate Number of Hours of Operation per day _____ day/wk _____ wks/yr. _____

Manufacturer _____

Date Constructed _____ Model No. _____

	Volume $(ft)^3$	Heat Release (BTU/hr)	Fuel		Temperature (°F)
			Type	BTU/hr	
Primary Chamber					
Secondary Chamber					

Stack Height: _____ ft. Stack Diamter: _____ Stack Temp. _____

Gas Flow Rate: _____ ACFM _____ DSCFM* Velocity: _____ FPS

*If 50 or more tons per day design capacity, submit the emissions rate in grains per standard cubic foot dry gas corrected to 50% excess air.

Type of pollution control device: [ ] Cyclone [ ] Wet Scrubber [ ] Afterburner

[ ] Other (specify) _____

CLAY FINES BIN (ALREADY PERMITTED, AC10-197099)

H. Emission Stack Geometry and Flow Characteristics (Provide data for each stack):

Stack Height: 50 **ft.** **Stack Diameter:** 0.3 **ft.**

Gas Flow Rate: 400 **ACFM** 360 **DSCFM** **Gas Exit Temperature:** 100 **°F.**

Water Vapor Content: 5 **%** **Velocity:** 94 **FPS**

SECTION IV: INCINERATOR INFORMATION

NOT APPLICABLE

Type of Waste	Type 0 (Plastics)	Type I (Rubbish)	Type II (Refuse)	Type III (Garbage)	Type IV (Pathological)	Type V (Liq.& Gas By-prod.)	Type VI (Solid By-prod.)
Actual lb/hr Incinerated							
Uncontrolled (lbs/hr)							

Description of Waste _____

Total Weight Incinerated (lbs/hr) _____ **Design Capacity (lbs/hr)** _____

Approximate Number of Hours of Operation per day _____ **day/wk** _____ **wks/yr.** _____

Manufacturer _____

Date Constructed _____ **Model No.** _____

	Volume $(ft)^3$	Heat Release (BTU/hr)	Fuel		Temperature (°F)
			Type	BTU/hr	
Primary Chamber					
Secondary Chamber					

Stack Height: _____ **ft.** **Stack Diamter:** _____ **Stack Temp.** _____

Gas Flow Rate: _____ **ACFM** _____ **DSCFM* Velocity:** _____ **FPS**

**If 50 or more tons per day design capacity, submit the emissions rate in grains per standard cubic foot dry gas corrected to 50% excess air.*

Type of pollution control device: [ ] Cyclone [ ] Wet Scrubber [ ] Afterburner

[ ] Other (specify) _____

LIME BIN (ALREADY PERMITTED, AC10-197099)

H. Emission Stack Geometry and Flow Characteristics (Provide data for each stack):

Stack Height: 65 ft. Stack Diameter: 0.5 ft.

Gas Flow Rate: 722 ACFM 675 DSCFM Gas Exit Temperature: 77 °F.

Water Vapor Content: 5 % Velocity: 60 FPS

SECTION IV: INCINERATOR INFORMATION

NOT APPLICABLE

Type of Waste	Type 0 (Plastics)	Type I (Rubbish)	Type II (Refuse)	Type III (Garbage)	Type IV (Pathological)	Type V (Liq.& Gas By-prod.)	Type VI (Solid By-prod.)
Actual lb/hr Incinerated							
Uncontrolled (lbs/hr)							

Description of Waste _____

Total Weight Incinerated (lbs/hr) _____ Design Capacity (lbs/hr) _____

Approximate Number of Hours of Operation per day _____ day/wk _____ wks/yr. _____

Manufacturer _____

Date Constructed _____ Model No. _____

	Volume $(ft)^3$	Heat Release (BTU/hr)	Fuel		Temperature (°F)
			Type	BTU/hr	
Primary Chamber					
Secondary Chamber					

Stack Height: _____ ft. Stack Diamter: _____ Stack Temp. _____

Gas Flow Rate: _____ ACFM _____ DSCFM* Velocity: _____ FPS

*If 50 or more tons per day design capacity, submit the emissions rate in grains per standard cubic foot dry gas corrected to 50% excess air.

Type of pollution control device: [ ] Cyclone [ ] Wet Scrubber [ ] Afterburner

[ ] Other (specify) _____

Brief description of operating characteristics of control devices: _____

_____

_____

_____

_____

Ultimate disposal of any effluent other than that emitted from the stack (scrubber water, ash, etc.):

_____

_____

_____

_____

NOTE: Items 2, 3, 4, 6, 7, 8, and 10 in Section V must be included where applicable.

SECTION V: SUPPLEMENTAL REQUIREMENTS

SEE ATTACHMENT 1

Please provide the following supplements where required for this application.

1. Total process input rate and product weight -- show derivation [Rule 17-2.100(127)]

2. To a construction application, attach basis of emission estimate (e.g., design calculations, design drawings, pertinent manufacturer's test data, etc.) and attach proposed methods (e.g., FR Part 60 Methods 1, 2, 3, 4, 5) to show proof of compliance with applicable standards. To an operation application, attach test results or methods used to show proof of compliance. Information provided when applying for an operation permit from a construction permit shall be indicative of the time at which the test was made.

3. Attach basis of potential discharge (e.g., emission factor, that is, AP42 test).

4. With construction permit application, include design details for all air pollution control systems (e.g., for baghouse include cloth to air ratio; for scrubber include cross-section sketch, design pressure drop, etc.)

5. With construction permit application, attach derivation of control device(s) efficiency. Include test or design data. Items 2, 3 and 5 should be consistent: actual emissions = potential (1-efficiency).

6. An 8 1/2" x 11" flow diagram which will, without revealing trade secrets, identify the individual operations and/or processes. Indicate where raw materials enter, where solid and liquid waste exit, where gaseous emissions and/or airborne particles are evolved and where finished products are obtained.

7. An 8 1/2" x 11" plot plan showing the location of the establishment, and points of airborne emissions, in relation to the surrounding area, residences and other permanent structures and roadways (Example: Copy of relevant portion of USGS topographic map).

8. An 8 1/2" x 11" plot plan of facility showing the location of manufacturing processes and outlets for airborne emissions. Relate all flows to the flow diagram.

9. The appropriate application fee in accordance with Rule 17-4.05. The check should be made payable to the Department of Environmental Regulation. $250

10. With an application for operation permit, attach a Certificate of Completion of Construction indicating that the source was constructed as shown in the construction permit.

SECTION VI: BEST AVAILABLE CONTROL TECHNOLOGY

NOT APPLICABLE

1. Are standards of performance for new stationary sources pursuant to 40 C.F.R. Part 60 applicable to the source?

[ ] Yes [ ] No

Contaminant	Rate or Concentration

2. Has EPA declared the best available control technology for this class of sources (If yes, attach copy)

[ ] Yes [ ] No

Contaminant	Rate or Concentration

3. What emission levels do you propose as best available control technology?

Contaminant	Rate or Concentration

4. Describe the existing control and treatment technology (if any).

1. Control Device/System:
2. Operating Principles:
3. Efficiency:*
4. Capital Costs:

*Explain method of determining

5. Useful Life:

6. Operating Costs:

7. Energy:

8. Maintenance Cost:

9. Emissions:

Contaminant	Rate or Concentration

10. Stack Parameters

a. Height: ft.

b. Diameter: ft.

c. Flow Rate: ACFM

d. Temperature: °F.

e. Velocity: FPS

E. Describe the control and treatment technology available (As many types as applicable, use additional pages if necessary).

1.

a. Control Device:

b. Operating Principles:

c. Efficiency:[1]

d. Capital Cost:

e. Useful Life:

f. Operating Cost:

g. Energy:[2]

h. Maintenance Cost:

i. Availability of construction materials and process chemicals:

j. Applicability to manufacturing processes:

k. Ability to construct with control device, install in available space, and operate within proposed levels:

2.

a. Control Device:

b. Operating Principles:

c. Efficiency:[1]

d. Capital Cost:

e. Useful Life:

f. Operating Cost:

g. Energy:[2]

h. Maintenance Cost:

i. Availability of construction materials and process chemicals:

[1]Explain method of determining efficiency.
[2]Energy to be reported in units of electrical power - KWH design rate.

j. Applicability to manufacturing processes:

k. Ability to construct with control device, install in available space, and operate within proposed levels:

3.

a. Control Device:

b. Operating Principles:

c. Efficiency:[1]

d. Capital Cost:

e. Useful Life:

f. Operating Cost:

g. Energy:[2]

h. Maintenance Cost:

i. Availability of construction materials and process chemicals:

j. Applicability to manufacturing processes:

k. Ability to construct with control device, install in available space, and operate within proposed levels:

4.

a. Control Device:

b. Operating Principles:

c. Efficiency:[1]

d. Capital Costs:

e. Useful Life:

f. Operating Cost:

g. Energy:[2]

h. Maintenance Cost:

i. Availability of construction materials and process chemicals:

j. Applicability to manufacturing processes:

k. Ability to construct with control device, install in available space, and operate within proposed levels:

E. Describe the control technology selected:

1. Control Device:

2. Efficiency:[1]

3. Capital Cost:

4. Useful Life:

5. Operating Cost:

6. Energy:[2]

7. Maintenance Cost:

8. Manufacturer:

9. Other locations where employed on similar processes:

a. (1) Company:

(2) Mailing Address:

(3) City:

(4) State:

[1]Explain method of determining efficiency.
[2]Energy to be reported in units of electrical power - KWH design rate.

(5) Environmental Manager:

(6) Telephone No.:

(7) Emissions:[1]

Contaminant	Rate or Concentration

(8) Process Rate:[1]

b. (1) Company:

(2) Mailing Address:

(3) City: (4) State:

(5) Environmental Manager:

(6) Telephone No.:

(7) Emissions:[1]

Contaminant	Rate or Concentration

(8) Process Rate:[1]

10. Reason for selection and description of systems:

[1]Applicant must provide this information when available. Should this information not be available, applicant must state the reason(s) why.

SECTION VII - PREVENTION OF SIGNIFICANT DETERIORATION

NOT APPLICABLE

A. Company Monitored Data

1. _____ no. sites _____ TSP _____ ( ) SO^2* _____ Wind spd/dir

Period of Monitoring _____/_____/_____ to _____/_____/_____
month day year month day year

Other data recorded _____

Attach all data or statistical summaries to this application.

*Specify bubbler (B) or continuous (C).

2. Instrumentation, Field and Laboratory

a. Was instrumentation EPA referenced or its equivalent? [ ] Yes [ ] No

b. Was instrumentation calibrated in accordance with Department procedures?

[ ] Yes [ ] No [ ] Unknown

B. Meteorological Data Used for Air Quality Modeling

1. _____ Year(s) of data from ____/____/____ to ____/____/____
month day year month day year

2. Surface data obtained from (location)_____

3. Upper air (mixing height) data obtained from (location)_____

4. Stability wind rose (STAR) data obtained from (location)_____

C. Computer Models Used

1. _____ Modified? If yes, attach description.

2. _____ Modified? If yes, attach description.

3. _____ Modified? If yes, attach description.

4. _____ Modified? If yes, attach description.

Attach copies of all final model runs showing input data, receptor locations, and principle output tables.

D. Applicants Maximum Allowable Emission Data

Pollutant	Emission Rate	
TSP	_____	grams/sec
SO^2	_____	grams/sec

E. Emission Data Used in Modeling

Attach list of emission sources. Emission data required is source name, description of point source (on NEDS point number), UTM coordinates, stack data, allowable emissions, and normal operating time.

F. Attach all other information supportive to the PSD review.

G. Discuss the social and economic impact of the selected technology versus other applicable technologies (i.e., jobs, payroll, production, taxes, energy, etc.). Include assessment of the environmental impact of the sources.

H. Attach scientific, engineering, and technical material, reports, publications, journals, and other competent relevant information describing the theory and application of the requested best available control technology.

ATTACHMENT 1

CALCULATIONS

KOOGLER & ASSOCIATES

ATTACHMENT 1

CALCULATIONS

I. **KILN 1**

1. Process Rates

A. Process Input Rate

Clay (dry)	17,200 lbs/hr
Moisture (@ 40%)	11,600 lbs/hr
TOTAL	28,800 lbs/hr

B. Production Rate

Clay (dry)	14,000 lbs/hr (7.0 tons per hour)
Calcining Loss	3,200 lbs/hr (primarily CO_2)
Moisture Loss	11,600 lbs/hr
TOTAL	28,800 lbs/hr

C. Fuel Input Rate (Permitted Rates)

Total heat input = 31.5 MMBtu/hr

(i)	Coal	2625 lbs/hr
(ii)	LBM	315 gals/hr

Add the following alternate fuels (see Attachment 8):

(iii)	No. 2 Fuel Oil	225 gals/hr
(iv)	Propane	344 gals/hr

NOTE: A combination of the above fuels may be fired, not to exceed 31.5 MMBTU/hr.

2/3. Uncontrolled and Actual Emissions

A. Particulate Matter

(i) Uncontrolled Emissions at 70 lbs/ton of product (AP-42, Section 8.3.1, Clay Products)

PM = 7 tons/hr x 70 lbs/ton of product

= 490 lbs/hr

x 8760 hrs/yr x 1 ton/2000 lbs

= 2146.2 tons/yr

(ii) Controlled PM Emissions

Basis: 0.08 gr/dscf corrected to 7% oxygen

(Typical flue gas O_2 content of 15%)

PM = 0.08 gr/dscf x lb/7000 gr x 40,000 dscf/min @ 15% O_2

x 60 min/hr x (0.21-0.15)/(0.21-0.07)

= 11.8 lbs/hr

x 8760 hrs/yr x ton/2000 lbs

= 51.5 tons/yr

B. Sulfur Dioxide Emissions (currently permitted rates)

SO_2 = 226 lbs/hr (1-hr maximum)

SO_2 = 84.0 lbs/hr (average)

x 8760 hrs/yr x ton/2000 lbs

= 367.9 tons/yr

C. Nitrogen Oxides Emissions

Based on documented emissions (see Attachment 7), the existing and proposed NOx emissions can be estimated to be the following:

NOx = 15.3 lbs/hr

x 8760 hrs/yr x ton/2000 lbs

= 67.0 tons/yr

D. Carbon Monoxide Emissions

Based on CO level of 100 ppm @ 7% O_2 (RCRA regulations)

CO = $100/10^6$ x 40,000 dscf/min x 60 min/hr

x lbmole/385 ft^3 x 28 lb/lbmole

x (0.21-0.15)/(0.21-0.07)

= 7.5 lbs/hr

x 8760 hrs/yr x ton/2000 lbs

= 32.8 tons/yr

E. Volatile Organic Compounds Emissions

Based on measured HC level of 40 ppm at a flow rate of 24,600 scfm, on a similar kiln:

VOC = $40/10^6$ x 40,000 scf/min x 60 min/hr

x lbmole/385 ft^3 x 44 lb/lbmole (propane)

= 11.0 lbs/hr

x 8760 hrs/yr x ton/2000 lbs

= 48.1 tons/yr

F. Non-criteria pollutants are also expected to be controlled by lime injection and the baghouse. Testing will be conducted at some time in the near future to determine control efficiencies and emission rates as required by RCRA regulations. Based on Pre-Compliance Certification of the Florida Solite facility (see Attachment 10), it can be concluded that the facility will be in compliance with the FDER No-Threat-Level (NTL) guidelines.

4. Control Device Details

See Attachment 2.

5. Baghouse Control Efficiency for Particulate Matter

Inlet	=	490 lbs/hr
Outlet	=	11.8 lbs/hr
Required Efficiency	=	(490 - 11.8) x 100/490 = 97.6%
Expected Efficiency	=	99%

II. **KILN 1A**

1. Process Rates

A. Process Input Rate (currently permitted rates)

Clay (dry)	17,200 lbs/hr
Moisture (@ 40%)	11,600 lbs/hr
TOTAL	28,800 lbs/hr

B. Production Rate (currently permitted rates)

Clay (dry)	14,000 lbs/hr	(7.0 tons per hour)
Calcining Loss	3,200 lbs/hr	(primarily CO_2)
Moisture Loss	11,600 lbs/hr	
TOTAL	28,800 lbs/hr	

C. Fuel Input Rate (currently permitted rates)

Total heat input = 47.6 MMBtu/hr

(i)	Coal	4000 lbs/hr
(ii)	LBM	476 gals/hr

Add the following alternate fuels (see Attachment 8):

(iii)	No. 2 Fuel Oil	340 gals/hr
(iv)	Propane	520 gals/hr

NOTE: A combination of the above fuels may be fired, not to exceed 47.6 MMBTU/hr.

2/3. Uncontrolled and Actual Emissions

A. Particulate Matter

(i) Uncontrolled Emissions at 70 lbs/ton of product
(AP-42, Section 8.3.1, Clay Products)

PM = 7 tons/hr x 70 lbs/ton of product

= 490 lbs/hr

x 7600 hrs/yr x 1 ton/2000 lbs

= 1862.0 tons/yr

(ii) Controlled PM Emissions

Basis: 0.08 gr/dscf corrected to 7% oxygen

(Typical flue gas O_2 content of 15%)

PM = 0.08 gr/dscf x lb/7000 gr x 40,000 dscf/min @ 15% O_2

x 60 min/hr x (0.21-0.15)/(0.21-0.07)

= 11.8 lbs/hr

x 7600 hrs/yr x ton/2000 lbs

= 44.7 tons/yr

B. Sulfur Dioxide Emissions (currently permitted rates)

SO_2 = 226 lbs/hr (1-hr maximum)

SO_2 = 75.8 lbs/hr (average)

x 7600 hrs/yr x ton/2000 lbs

= 288.0 tons/yr

C. Nitrogen Oxides Emissions (currently permitted rates)

$$NOx = 14.2 \text{ lbs/hr} \times 7600 \text{ hrs/yr} \times \text{ton}/2000 \text{ lbs}$$

$$= 53.96 \text{ tons/yr}, \sim 54.0 \text{ tons/yr}$$

D. Carbon Monoxide Emissions

Based on CO level of 100 ppm @ 7% O_2 (RCRA regulations)

$$CO = 100/10^6 \times 40{,}000 \text{ dscf/min} \times 60 \text{ min/hr} \times \text{lbmole}/385 \text{ ft}^3 \times 28 \text{ lb/lbmole} \times (0.21-0.15)/(0.21-0.07)$$

$$= 7.5 \text{ lbs/hr} \times 7600 \text{ hrs/yr} \times \text{ton}/2000 \text{ lbs}$$

$$= 28.4 \text{ tons/yr}$$

E. Volatile Organic Compounds Emissions

Based on measured HC level of 40 ppm at a flow rate of 24,600 scfm, on a similar kiln:

$$VOC = 40/10^6 \times 40{,}000 \text{ scf/min} \times 60 \text{ min/hr} \times \text{lbmole}/385 \text{ ft}^3 \times 44 \text{ lb/lbmole (propane)}$$

$$= 11.0 \text{ lbs/hr} \times 7600 \text{ hrs/yr} \times \text{ton}/2000 \text{ lbs}$$

$$= 41.7 \text{ tons/yr}$$

F. Non-criteria pollutants are also expected to be controlled by lime injection and the baghouse. Testing will be conducted at some time in the near future to determine control efficiencies and emission rates as required by RCRA regulations. Based on Pre-Compliance Certification of the Florida Solite facility (see Attachment 10), it can be concluded that the facility will be in compliance with the FDER No-Threat-Level (NTL) guidelines.

4. Control Device Details

See Attachment 2.

5. Baghouse Control Efficiency for Particulate Matter

Inlet	=	490 lbs/hr
Outlet	=	11.8 lbs/hr
Required Efficiency	=	(490 - 11.8) x 100/490 = 97.6%
Expected Efficiency	=	99%

III. **CLAY FINES BIN** (already permitted under AC10-197099)

1. Process Rates

Process (Transfer) Rate = 2600 lbs/hr

2/3. Uncontrolled and Actual Emissions

A. Uncontrolled Particulate Matter Emissions

Based on 0.27 lb/ton of material (pneumatic cement transfer operation factor, AP-42, Section 8-10).

PM = 0.27 lb/ton x 2600 lbs/hr x ton/2000 lbs

= 0.35 lb/hr

x 8760 hrs/yr x ton/2000 lbs

= 1.5 tons/yr

B. Actual Particulate Matter Emissions

Based on 0.02 gr/dscf exit gas loading.

PM = 0.02 gr/dscf x 360 scf/min x lb/7000 gr x 60 min/hr

= 0.06 lb/hr

x 8760 hrs/yr x ton/2000 lbs

= 0.3 ton/yr

4. Control Device Details (see Attachment 2)

Model: 9-DS-8 Blow through type

Cloth Area: 93 sq. ft.

Air/Cloth: 3.8 to 1

Filter Media: Polyester

5. Control Efficiency

Inlet = 0.35 lb/hr

Outlet = 0.06 lb/hr

Required Efficiency = (0.35 - 0.06) x 100/0.35 = 82%

Expected Efficiency = 99%

IV. **LIME SYSTEM** (already permitted under AC10-197099)

1. Process Rates

Process (Transfer) Rate = 40,000 lbs/hr (truck unloading)

2/3. Uncontrolled and Actual Emissions

A. Uncontrolled Particulate Matter Emissions

Based on 0.27 lb/ton of material (pneumatic cement transfer operation factor, AP-42, Section 8-10).

PM = 0.27 lb/ton x 40,000 lbs/hr x ton/2000 lbs

= 5.4 lbs/hr

x 8760 hrs/yr x ton/2000 lbs

= 23.7 tons/yr

B. Actual Particulate Matter Emissions

Based on 0.02 gr/dscf exit gas loading.

PM = 0.02 gr/dscf x 675 scf/min x lb/7000 gr x 60 min/hr

= 0.12 lb/hr

x 8760 hrs/yr x ton/2000 lbs

= 0.5 ton/yr

4. Control Device Details (see Attachment 2)

Model:	9-DS-8 Blow through type (Equipped with blower)
Cloth Area:	93 sq. ft.
Air/Cloth:	6.7 to 1
Filter Media:	Polyester

5. Control Efficiency

Inlet	=	5.4 lbs/hr
Outlet	=	0.12 lb/hr
Required Efficiency	=	(5.4 - 0.12) x 100/5.4 = 98%
Expected Efficiency	=	99%

NET ANNUAL EMISSION CHANGES

A. Particulate Matter

The allowable emission rates for the kilns are representative of the actual emissions. Therefore, the net emission changes can be estimated based on the difference between the proposed and currently permitted emissions. As only Kiln 1 or 1A can be operated at a given time, the Kiln 1 emissions have been considered in the calculations below (worst case).

Proposed PM Emissions	=	51.5 tons/yr
Current PM Emissions	=	55.6 tons/yr
Net Change	=	(51.5 - 55.6) tons/yr
	=	- 4.1 tons/yr (Net Decrease)

B. Sulfur Dioxide - No Change

C. Nitrogen Oxides - No Change

D. Carbon Monoxide - No Change

E. Volatile Organic Compounds - No Change

F. Non-Criteria Pollutants

The sources will be in compliance with FDER NTL guidelines. See Attachment 10; Pre-Compliance Certification forms for Kilns 1, 1A and 5 based on one kiln only operating at a given time on LBM fuel.

ATTACHMENT 2

EQUIPMENT INFORMATION

KOOGLER & ASSOCIATES

ATTACHMENT

KILN BAGHOUSE

Best Available Copy

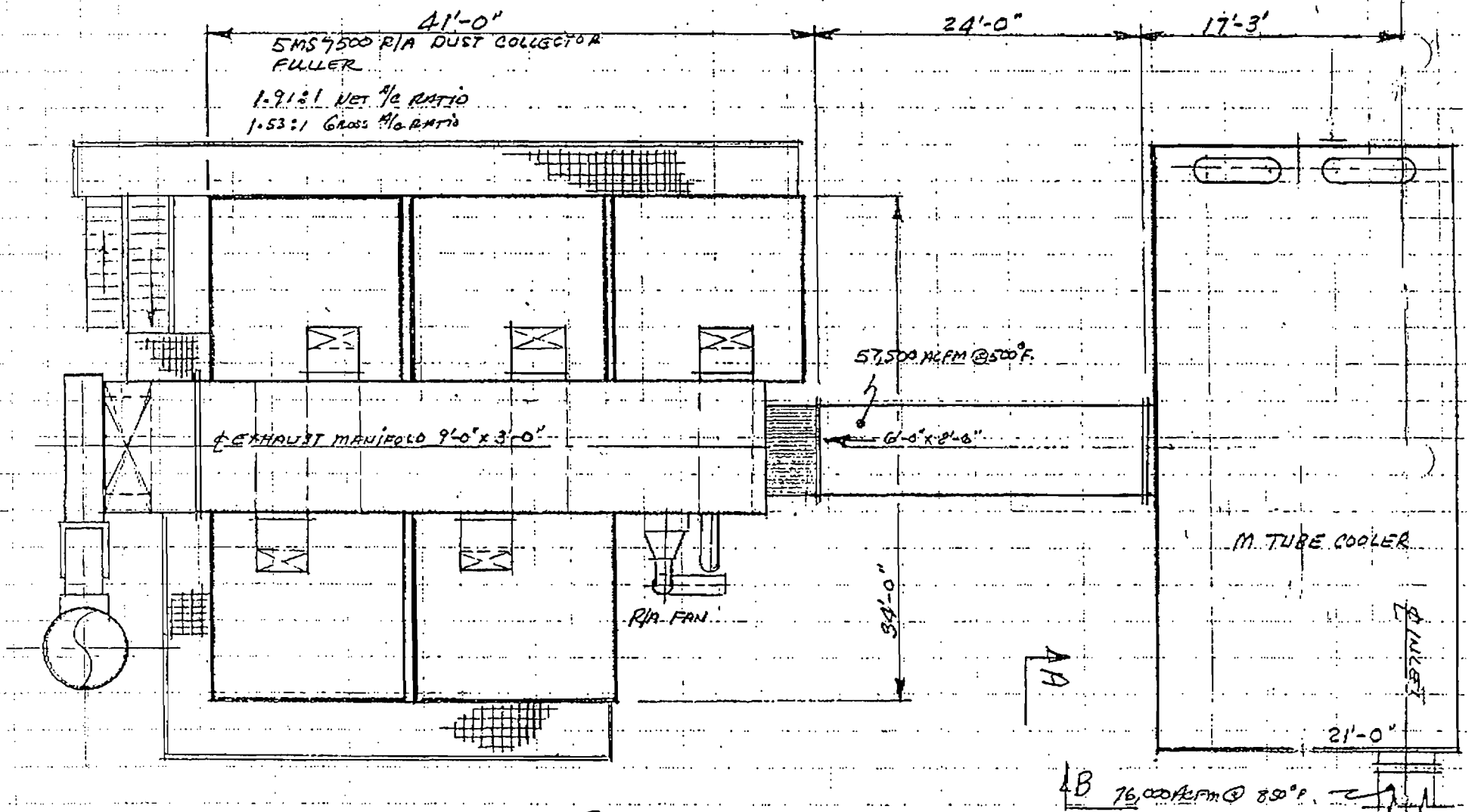

PLAN

SKETCH #1

FLORIDA SOLITE

DJS

1" = 10'

1/29/91

A[redacted]HME[redacted]B

KILN BAGHOUSE

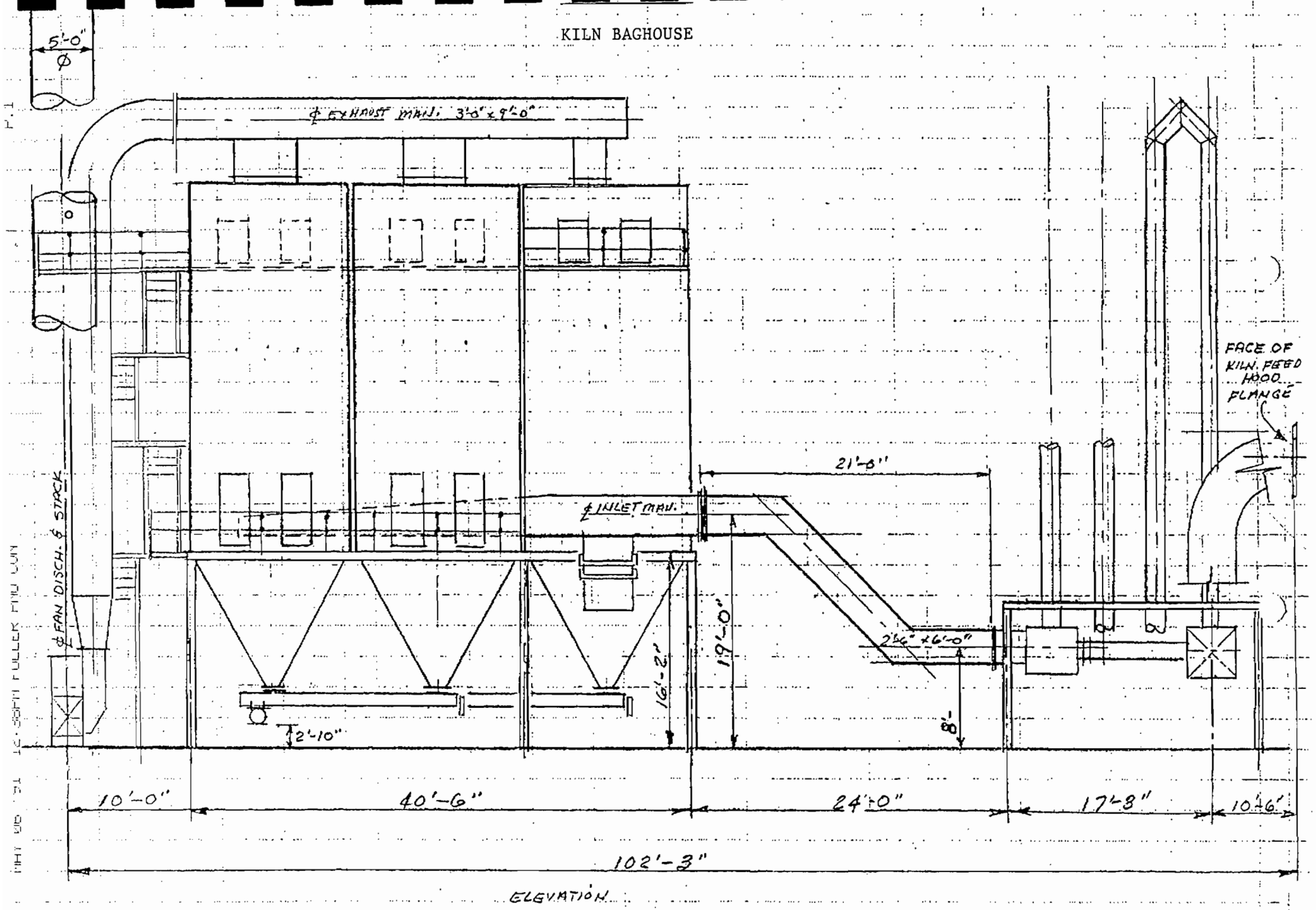

ELEVATION

FLORIDA SOLITE

SKETCH #2 DJS 1"=10'-0" DJS 4/30/91

ATTACHMENT

HEAT EXCHANGER

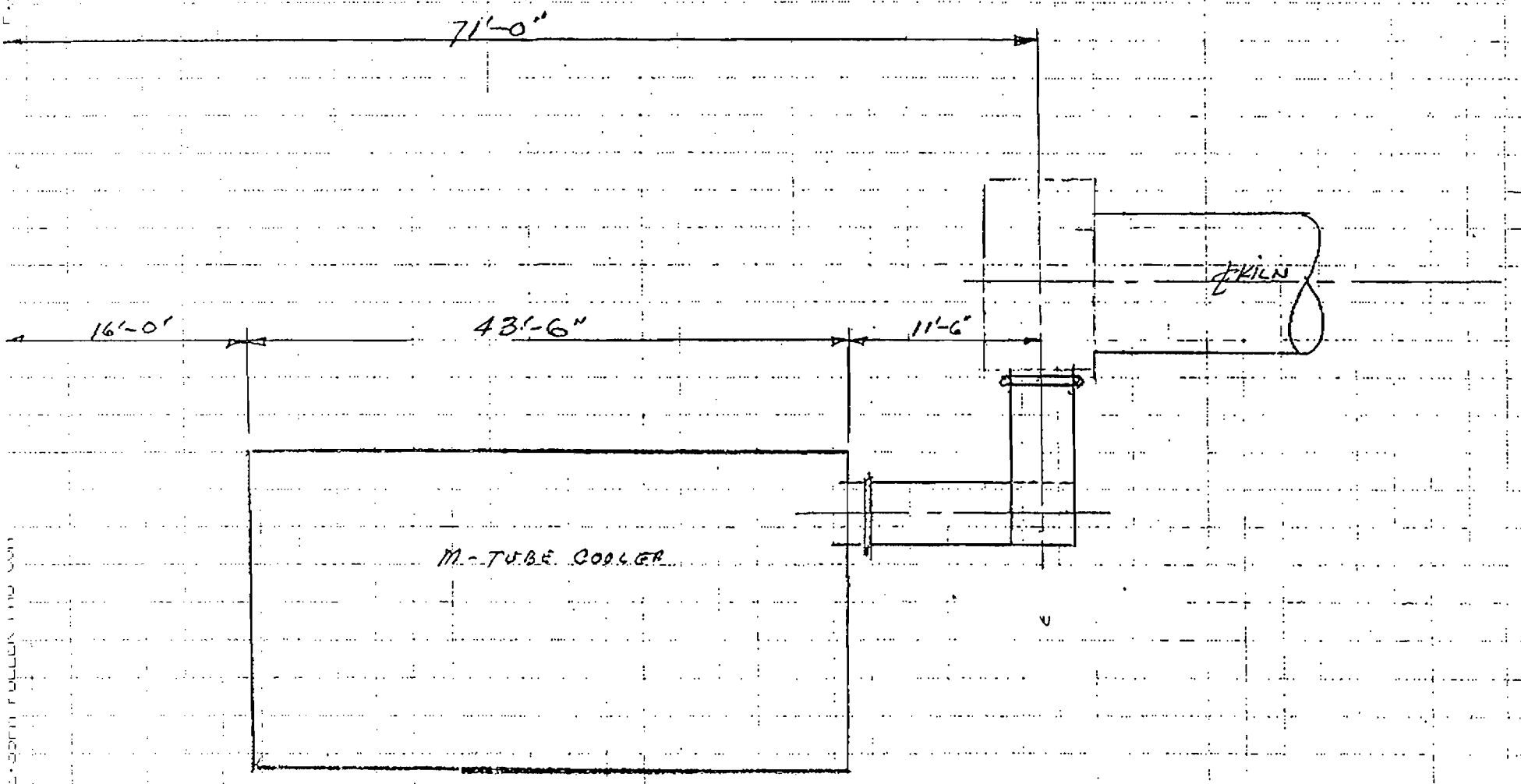

PLAN. CONTINUATION OF SKETCH #1

FLORIDA SOLITE

DSS 1" = 10'-0"

SKETCH #3 4/30/91

KILN - CONNECTION

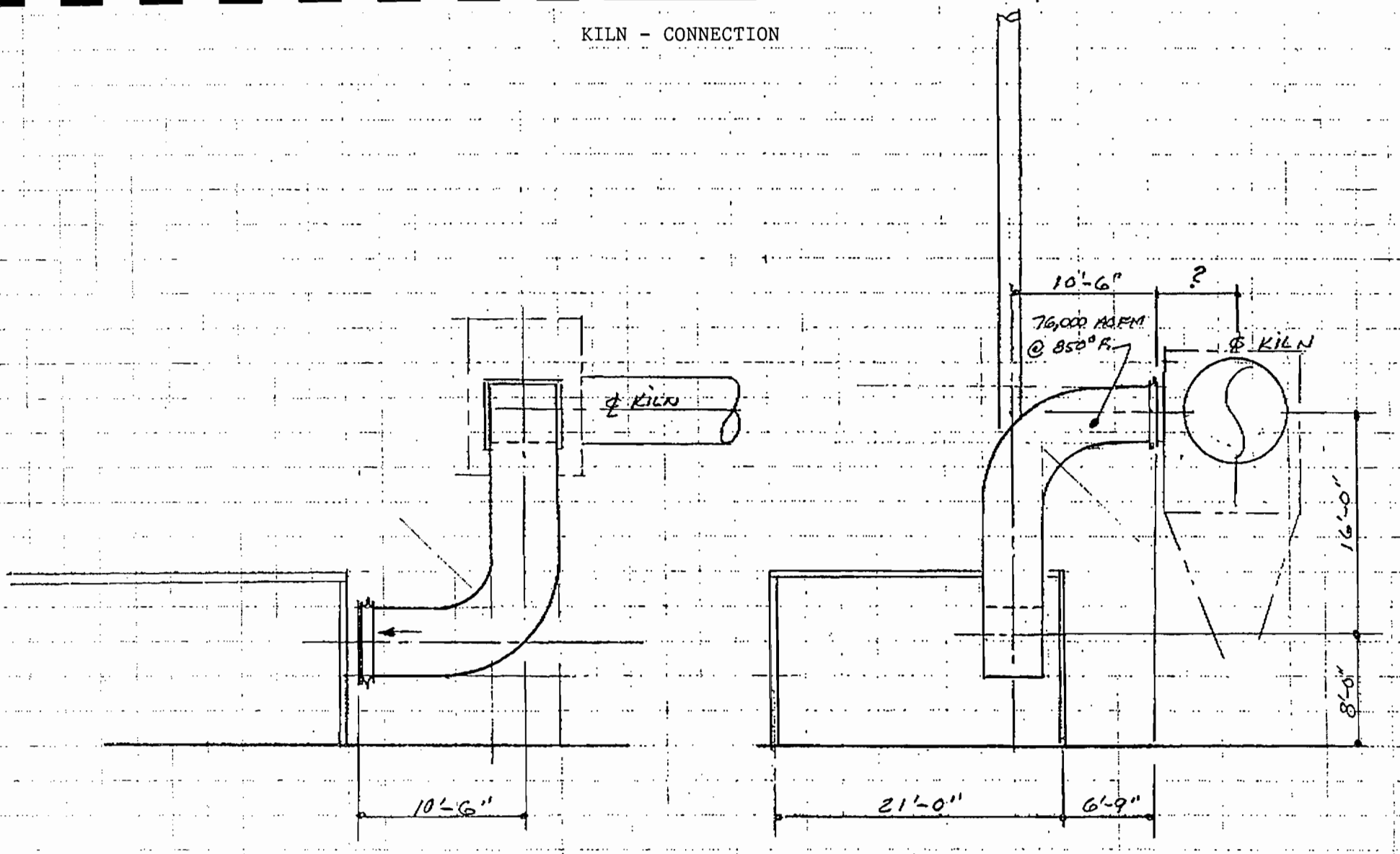

View "A"

View "B"

FLORIDA SOLITE

DJS 1" = 10'-0"

SKETCH # 4 4/30/91

MAY 06 '91 12:35PM FULLER PHO 0.04 P.2

ATTACHMENT

CLAY FINES COLLECTION SYSTEM

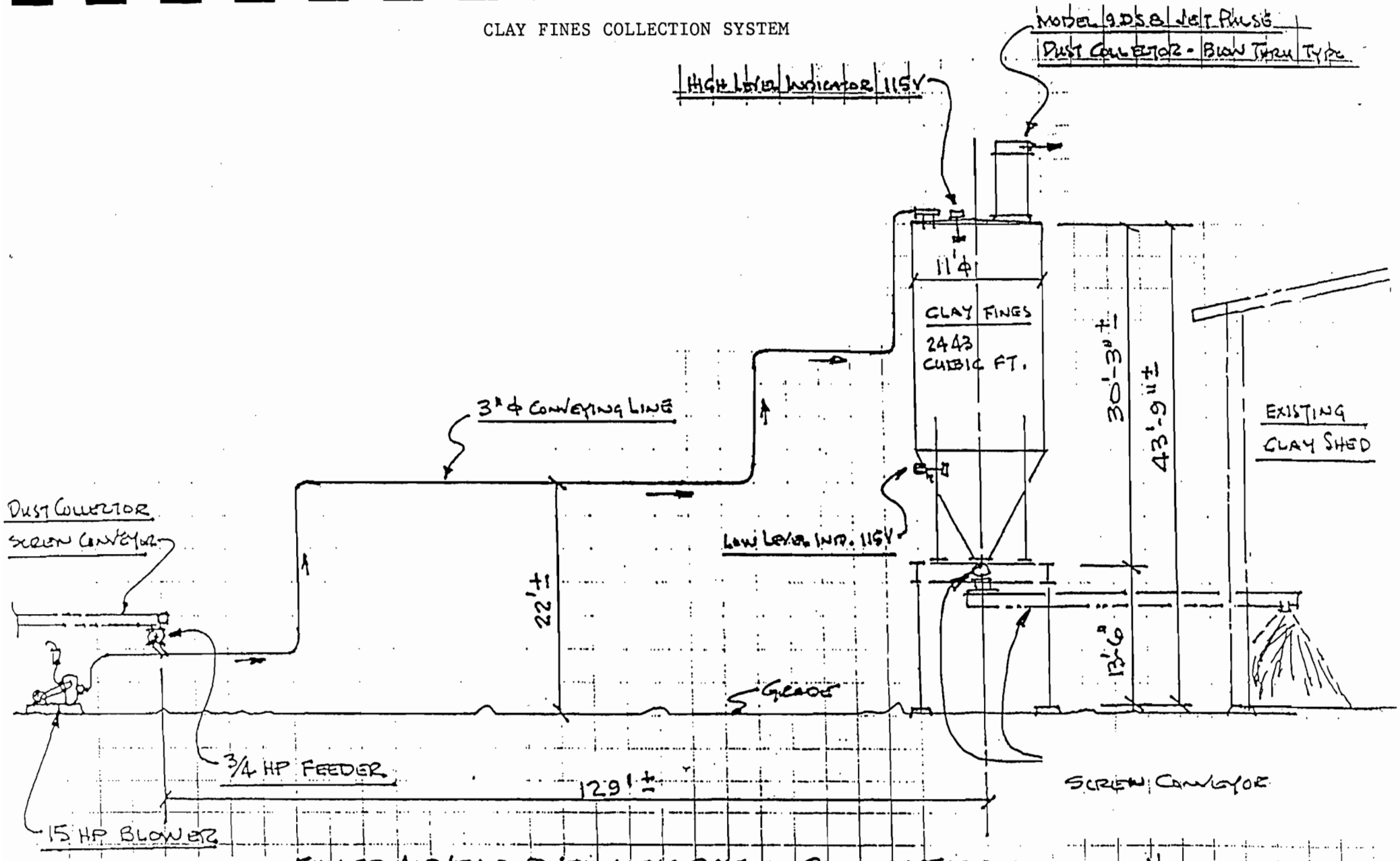

FULLER AIRVEYOR PNEUMATIC SYSTEM - PRESSURE TYPE
CLAY FINES - DISCHARGE FROM BAG HOUSE

DON HECKMAN MLE
MAY 20, 1991

SKETCH # 955-A

ATTACHMENT 2F

LIME SYSTEM

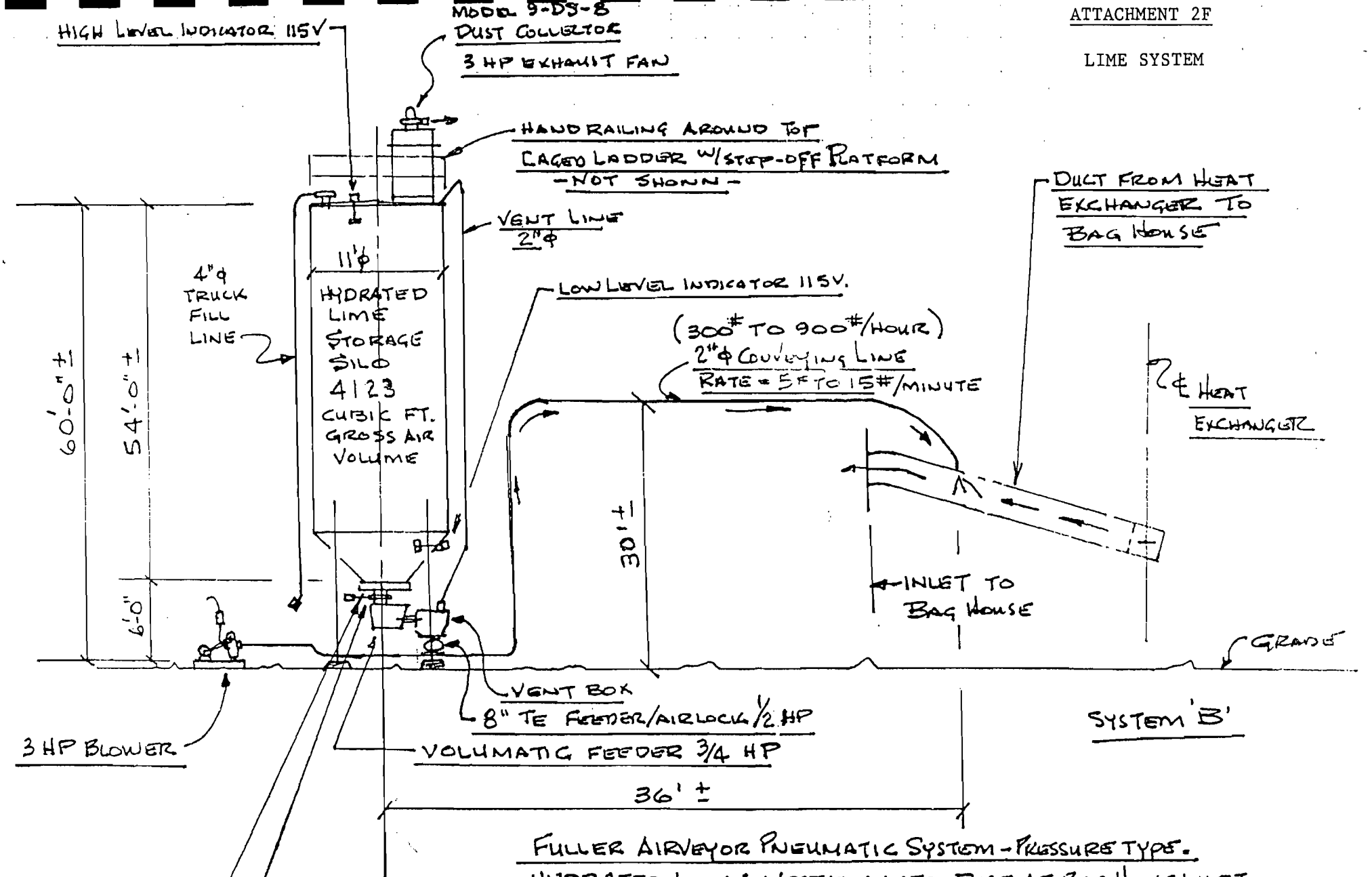

FULLER AIRVEYOR PNEUMATIC SYSTEM - PRESSURE TYPE.
HYDRATED LIME INJECTION INTO DUCT AT BAG HOUSE INLET

DON HECKMAN MLE
JUNE 5, 1991
SKETCH # 955-B REV. #1

ATTACHMENT 3

PROCESS FLOW DIAGRAM

KOOGLER & ASSOCIATES

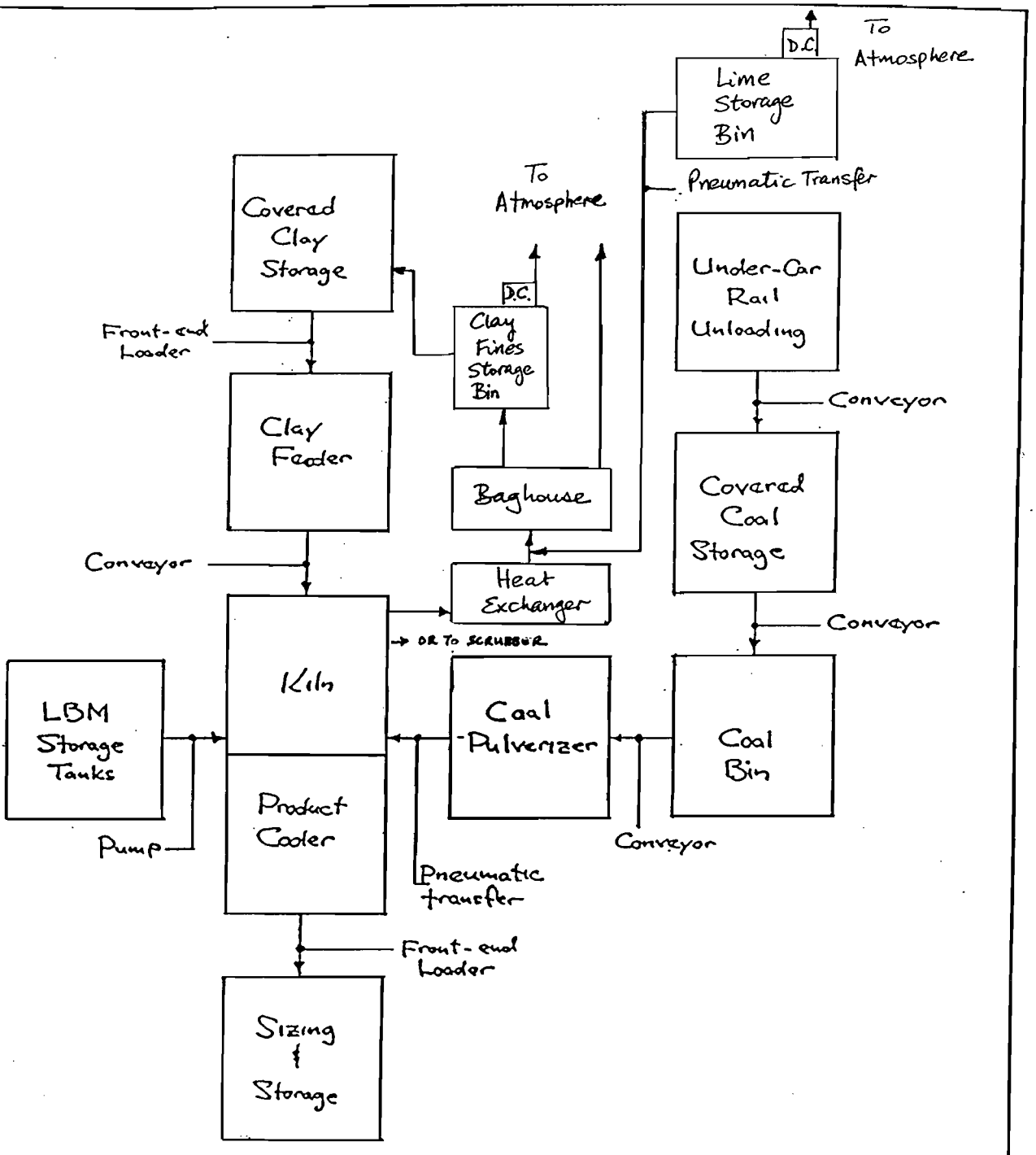

ATTACHMENT 3
PROCESS FLOW DIAGRAM

FLORIDA SOLITE COMPANY
GREEN COVE SPRINGS, FLORIDA

KOOGLER & ASSOCIATES

ATTACHMENT 4

SITE LOCATION

KOOGLER & ASSOCIATES

Best Available Copy

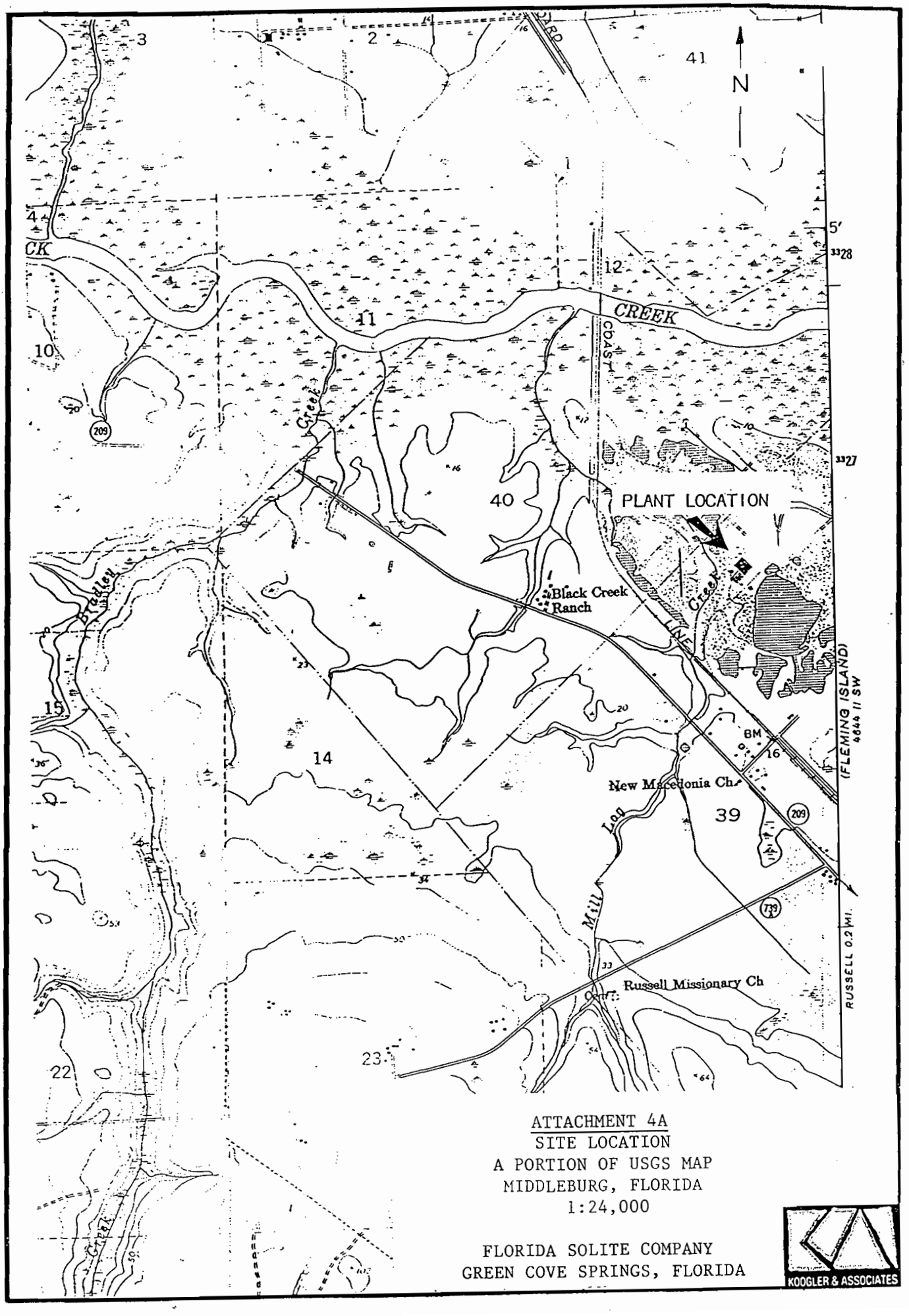

ATTACHMENT 4A
SITE LOCATION
A PORTION OF USGS MAP
MIDDLEBURG, FLORIDA
1:24,000

FLORIDA SOLITE COMPANY
GREEN COVE SPRINGS, FLORIDA

KOOGLER & ASSOCIATES

Best Available Copy

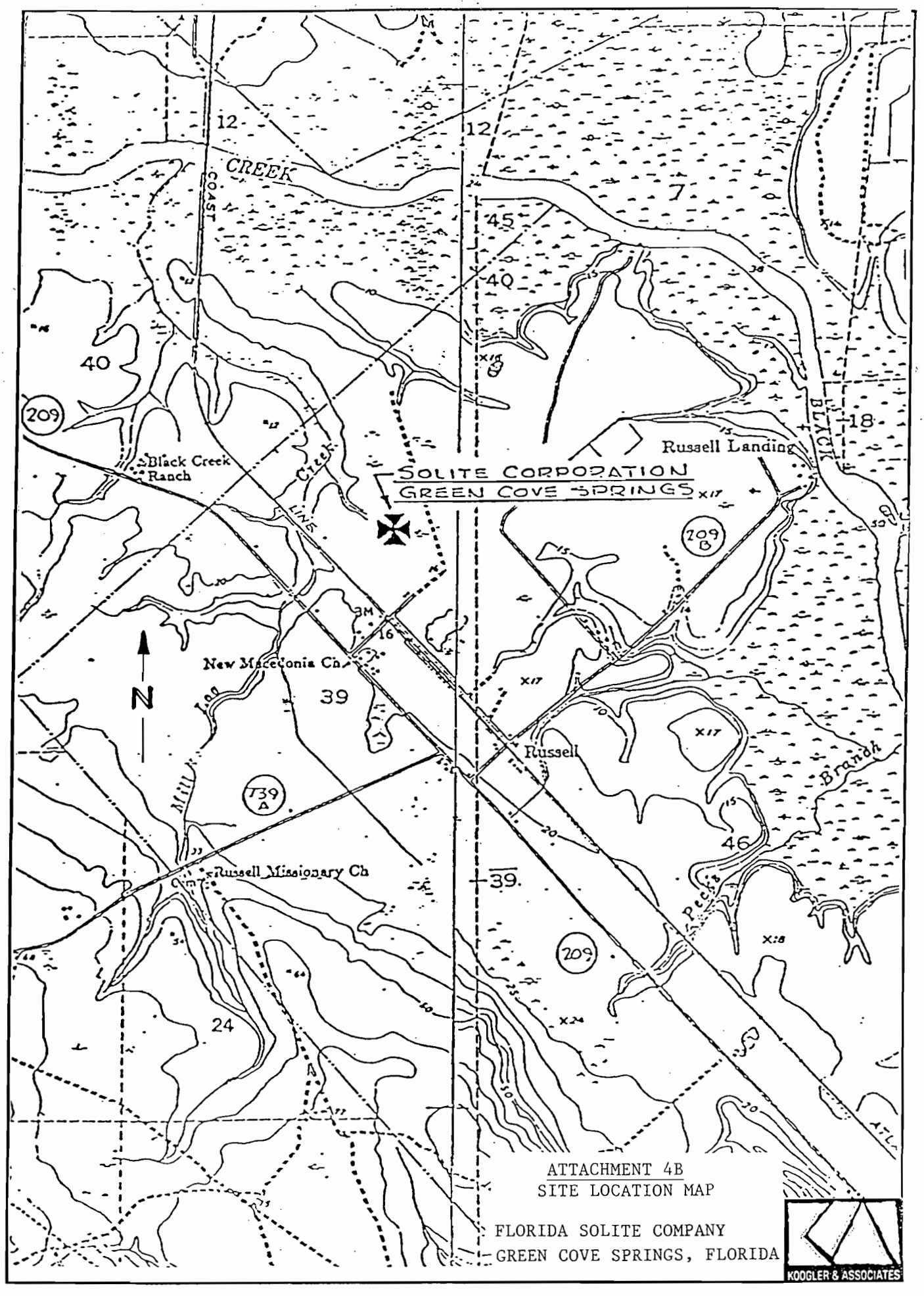

ATTACHMENT 4B
SITE LOCATION MAP

FLORIDA SOLITE COMPANY
GREEN COVE SPRINGS, FLORIDA

KOOGLER & ASSOCIATES

ATTACHMENT 5

PLOT PLAN

KOOGLER & ASSOCIATES

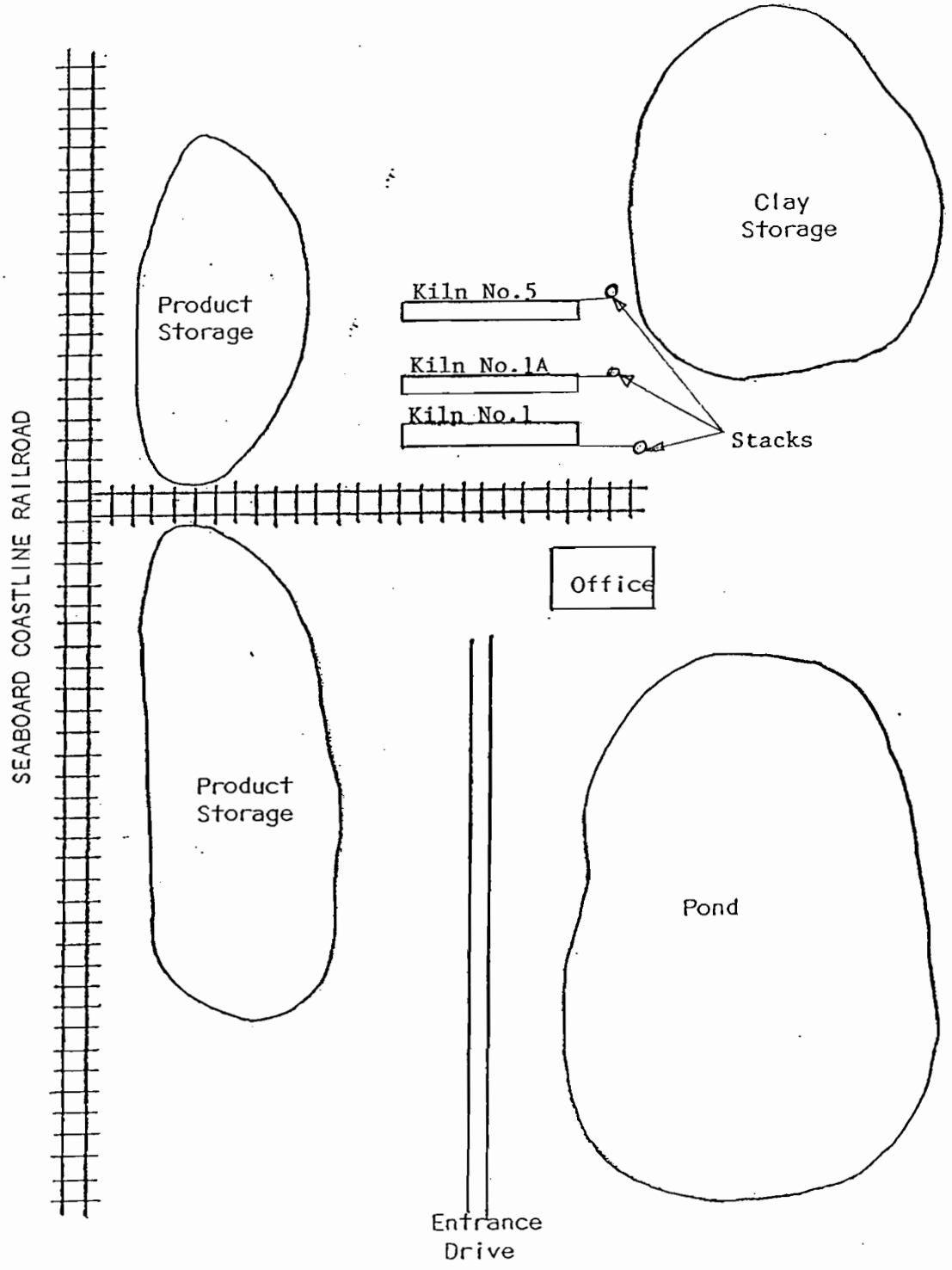

ATTACHMENT 5
PLOT PLAN

FLORIDA SOLITE COMPANY
GREEN COVE SPRINGS, FLORIDA

KOOGLER & ASSOCIATES

ATTACHMENT 6

DOCUMENTED RATES

KOOGLER & ASSOCIATES

ATTACHMENT 6

Florida Department of Environmental Regulation

Twin Towers Office Bldg. • 2600 Blair Stone Road • Tallahassee, Florida 32399-2400

Bob Martinez, Governor Dale Twachtmann, Secretary John Shearer, Assistant Secretary

September 20, 1989

Dr. John B. Koogler, P.E.
Koogler & Associates
4014 NW Thirteenth Street
Gainesville, Florida 32609

Dear Dr. Koogler:

Re: Florida Solite Company

The Bureau has reviewed your August 3, 1989, letter to the Northeast District requesting an amendment to specific conditions Nos. 1 and 4 of permit No. AO 10-154570.

In your September, 1986, application requesting Florida Solite be allowed to substitute kiln No. 1A for kiln No. 1 (file No. AC 10-125262), the baseline production and emissions for kiln No. 1 were documented. Briefly, clay input was 8.6 TPH (dry), production was 7.0 TPH (dry), particulate matter emissions were 12.7 lbs/hr (55.6 TPY), and sulfur dioxide emissions were 75.8 lbs/hr (288.1 TPY) average with a maximum 226.0 lbs/hr, one hour average.

Any increase in these rates is a modification and will require a new permit to construct.

Sincerely,

for W. H. Thomas

C. H. Fancy, P.E.
Bureau of Air Regulation

CHF/WH/t

cc: J. Cole, NE District

ATTACHMENT 7

NITROGEN OXIDES EMISSION DATA

KOOGLER & ASSOCIATES

ATTACHMENT 7

EMISSION MEASUREMENTS

KILN NO. 1A

FLORIDA SOLITE COMPANY
GREEN COVE SPRINGS, FLORIDA

Permit No. AC10-125262
(Expires June 30, 1989)

April 22, 1989

KOOGLER & ASSOCIATES
ENVIRONMENTAL SERVICES
4014 N.W. 13TH STREET
GAINESVILLE, FLORIDA 32609
(904) 377-5822

KOOGLER & ASSOCIATES

TABLE 4

NITROGEN OXIDES EMISSION DATA

FLORIDA SOLITE COMPANY
April 22, 1989

KILN 1A

Run	Stack Gas Flow (dscfm)	Nitrogen Oxides (lb/hr)
1	27802	16.96
2	27442	12.83
3	26976	16.14
Avg.	27407	15.31

KOOGLER & ASSOCIATES

ATTACHMENT 8

LETTER TO FDER ON ALTERNATE FUELS

KOOGLER & ASSOCIATES

KOOGLER & ASSOCIATES
ENVIRONMENTAL SERVICES
4014 NW THIRTEENTH STREET
GAINESVILLE, FLORIDA 32609
904/377-5822 • FAX 377-7158

KA 150-90-03

December 6, 1991

Mr. C. H. Fancy
Florida Department of
Environmental Regulation
Twin Towers Office Building
2600 Blair Stone Road
Tallahassee, FL 32399-2400

Subject: Comments on Draft Permit for Kiln No. 5
Florida Solite Company
Green Cove Springs, Florida
Permit File AC10-197099

Dear Mr. Fancy:

During a recent review of the draft air construction permit issued for the Florida Solite No. 5 kiln by the Department on July 26, 1991, it came to our attention that the kiln should also be permitted to be fired with virgin fuel oil and propane. Recently adopted federal regulations addressing the use of hazardous waste derived (HWD) fuel require that a facility using such fuels be brought on-line with virgin or non-hazardous fuels. Once the facility has reached normal steady-state operating conditions, HWD fuel firing can commence.

The Florida Solite Company is requesting the option to use either virgin No. 2 fuel oil or propane as alternative non-HWD fuels to be used for the start-up of Kiln No. 5. To provide the maximum anticipated heat input of 66 million BTU per hour for Kiln No. 5, the firing rate of No. 2 fuel oil would be 475 gallons per hour and the firing rate of propane would 725 gallons per hour. The expected nitrogen oxides emissions from the firing of these fuels will be less than the 24.0 pounds per hour limit currently proposed in the subject draft air construction permit. The requested firing rates and the expected nitrogen oxides emission rates for the two requested alternative fuels are summarized in the attached table.

Your consideration of this request is appreciated. If additional information is required, please do not hesitate to contact me.

Very truly yours,

KOOGLER & ASSOCIATES

John B. Koogler wa

John B. Koogler, Ph.D., P.E.

JBK:wa
Enc.

c: Mr. Willard Hanks, FDER, Tallahassee
Mr. Ed Martin, Solite, Richmond
Mr. George Eure, Solite, Richmond
Mr. Bill Johnson, Solite, Cascade
Mr. George Williamson, Solite, Mobile
Mr. Tony Saunders, Florida Solite

FLORIDA SOLITE COMPANY
GREEN COVE SPRINGS, FLORIDA

KILN NO. 5
PERMIT AC10-197099

ALTERNATIVE FUEL USE

Fuel	Fuel use (gal/hr) Avg	Fuel use (gal/hr) Max	Max Heat Input (MMBTU/hr)	Max Expected NOx Emissions (lb/hr)(1)(2)
No. 2 Oil(3)	400	475	66.0	9.5
Propane(4)	615	725	66.0	6.5

(1) Proposed emission limit in AC10-197099 is 24.0 lb/hr.

(2) AP-42 emission factors: No. 2 oil - 20 lb/1000 gal
Propane - 9 lb/1000 gal

(3) Heating Value - 140,000 BTU/gal

(4) Heating Value - 91,500 BTU/gal

ATTACHMENT 9

EXISTING PERMITS & CORRESPONDENCE

KOOGLER & ASSOCIATES

EXISTING PERMIT & CORRESPONDENCE

KILN 1

KOOGLER & ASSOCIATES

Florida Department of Environmental Regulation

Northeast District • 3426 Bills Road • Jacksonville, Florida 32207 • 904-798-4200

Bob Martinez, Governor | Dale Twachtmann, Secretary | John Shearer, Assistant Secretary
Ernest Frey, Deputy Assistant Secretary

PERMITTEE:		I.D. Number:	31JAX10000401
Florida Solite Company		Permit Number:	AO10-154570
P.O. Box 27211		Date of Issue:	February 14, 1989
Richmond, VA 23261		Expiration Date:	February 14, 1993
		County:	Clay
		Latitude/Longitude:	30°04'04"N; 81°45'14"W
		Project:	No. 1 Kiln
		UTM:	E-(17)427.4; N-3326.5

This permit is issued under the provisions of Chapter 403, Florida Statutes, and Florida Administrative Code Rules 17-2 and 17-4. The above named permittee is hereby authorized to perform the work or operate the facility shown on the application and approved drawing(s), plans, and other documents attached hereto or on file with the Department and made a part hereof and specifically described as follows:

For the operation of No. 1 Lightweight Aggregate Kiln with particulate matter emissions conrolled by a two (2) stage multicyclone and wet scrubber system in series.

Located west of U.S. 17, S.R. 209A, north of Green Cove Springs, Clay County, FL.

In accordance with:

permit application dated June 22, 1983
additional information received August 4, 1983
renewal application dated September 2, 1988
additional information received November 28, 1988

PERMITTEE:
Florida Solite Company
No. 1 Kiln

Permit No.: A010-154570
Date of Issue: February 14, 1989
Expiration Date: February 14, 1993

SPECIFIC CONDITIONS:

1. The maximum input rate (operating rate) is SEE BELOW and shall not be exceeded without prior approval.

RATE	MATERIAL
7.0 TPH	dry clay
0.7 TPH	coal
194 GPH	LBM[1,2]

[1]LBM - liquid burnable material
[2]LBM - shall conform to the specifications in the attachment to 07-28-83 additional information response and maintain a record of each shipment.

2. Testing of emissions must be performed at an operating rate of at least 90% of the rate in Specific Condition (SC) No.1, or SC No. 3 will become effective.

3. The operating rate shall not exceed 110% of the operating rate during the most recent test except for testing purposes, but shall not exceed the rate in SC No. 1. After testing at an operating rate greater than 110% of the last test operating rate, the operating rate shall not exceed 110% of the last (submitted) test operating rate until the test report at the higher rate has been reviewed and accepted by the Department.

4. The permitted maximum allowable emission rate for each pollutant is as follows:

Pollutant	Rule	Emission Rate lbs/hr	Emission Rate TPY
PM[1]	17-2.610(1), FAC	12.73[2]	55.60[3]
SO_2[4]	---	84.00[5]	366.9[3]
VE[6]	17-2.610(2), FAC	<20% opacity	

[1]PM - particulate matter
[2]Basis: P = 7.0 + 0.7 = 7.7 TPH
[3]Maximum operation time: 24 H/D; 7 D/W; 52 W/Y
[4]SO_2 - sulfur dioxide
[5]Basis: 0.7 TPH; sulfur content shall not exceed 3.0% (see 07-28-83 submittal)
[6]VE - visible emissions

5. Unconfined particulate matter emissions shall be controlled by application of dust suppressants, unless an alternative method is requested and approved, to all areas necessary to reasonably control such emissions per Florida Administrative Code Rule 17-2.610(3).

PERMITTEE:
Florida Solite Company
No. 1 Kiln

Permit No.: AO10-154570
Date of Issue: February 14, 1989
Expiration Date: February 14, 1993

SPECIFIC CONDITIONS:

6. Test the emission for the following pollutant(s) at the interval(s) indicated, notify the Department 14 days prior to testing, and submit the test report documentation to the Department within 45 days after completion of the testing:

Pollutant	Interval	Test Method
PM	12 months from 07-25-88	EPA 5
VE	12 months from 07-25-88	EPA 9
SO_2	12 months from 07-25-88	ASTM coal analysis

Tests and test reports shall comply with the requirements of Florida Administrative Code Rule 17-2.700(6) and (7), respectively.

7. In each test report, submit the maximum input/production rate at which this source was operated since the most recent test.

8. This kiln shall not be operated when No. 1A Kiln is in operation unless prior approval has been obtained from DARM in accordance with Specific Condition #2 of No. 1A Kiln, permit No. AC10-84168.

9. Submit an annual operation report for this source on the form supplied by the Department for each calendar year on or before March 1.

10. Any revision(s) to a permit (and application) must be submitted and approved prior to implementing.

11. Forms for renewal will be sent 5 months prior to February 14, 1993 and the completed forms with test results are due 90 days prior to February 14, 1993.

Issued this 14 day of February, 1989

STATE OF FLORIDA DEPARTMENT
OF ENVIRONMENTAL REGULATION

Ernest E. Frey
Deputy Assistant Secretary

Florida Department of Environmental Regulation

Northeast District • 3426 Bills Road • Jacksonville, Florida 32207 • 904-798-4200

Bob Martinez, Governor Dale Twachtmann, Secretary John Shearer, Assistant Secretary
Ernest Frey, Depury Assistant Secretary

June 27, 1990

Mr. John Kuiken, General Manager
Florida Solite Company
Post Office Box 297
Green Cove Springs, Florida 32043

Clay County - AP
Florida Solite Company
No. 1 Kiln
ID#31JAX10000401
Permit Revision

Dear Mr. Kuiken:

The No. 1 kiln permit no. AO10-154570 is revised as follows based on the review of the correspondences listed below:

Specific Condition No. 1 revisions are

Rate	Material
8.6 TPH	Clay (dry)*
315 GPH	LBM[1,2]

*Maximum lightweight aggregate production rate shall not exceed 7.0 TPH.

Specific Condition No. 4 revisions requested are not approved.

Correspondences to be attached to the permit are:
- revisions request letter dated 08-03-89
- letter from the Bureau dated 09-20-89
- letter request dated 10-03-89
- letter from District dated 04-17-90
- letter request dated 06-08-90

This letter and the above correspondences must be attached to and shall become a part of permit no. AO10-154570.

Sincerely,

Ernest E. Frey, P.E.
Deputy Assistant Secretary

EEF:JC:bt

FILING AND ACKNOWLEDGEMENT
FILED, on this date, pursuant to S120.52, Florida Statutes, with the designated Department Clerk, receipt of which is hereby acknowledged.

Clerk Date 7/2/90

EXISTING PERMIT & CORRESPONDENCE

KILN 1A

KOOGLER & ASSOCIATES

STATE OF FLORIDA

DEPARTMENT OF ENVIRONMENTAL REGULATION

TWIN TOWERS OFFICE BUILDING
2600 BLAIR STONE ROAD
TALLAHASSEE, FLORIDA 32399-2400

BOB MARTINEZ
GOVERNOR

DALE TWACHTMANN
SECRETARY

PERMITTEE:
Florida Solite Company
P. O. Box 297
Green Cove Springs, FL 32403

Permit Number: AC 10-125262
Expiration Date: August 1, 1987
County: Clay
Latitude/Longitude: 30° 04' 09" N
81° 45' 11" W
Project: Clay Aggregate Kiln No. 1A

This permit is issued under the provisions of Chapter 403, Florida Statutes, and Florida Administrative Code Rule(s) 17-2 and 17-4. The above named permittee is hereby authorized to perform the work or operate the facility shown on the application and approved drawings, plans, and other documents attached hereto or on file with the department and made a part hereof and specifically described as follows:

Substitute kiln No. 1A for Kiln No. 1. Kiln No. 1A is a 47.6 million Btu/hr heat input, 7 TPH (product) unit that is equipped with a cooler and a Ducon Dynamic, Type UW4, Model 111, Size 108 scrubber. It will use the existing wet clay feed system, coal and liquid burnable material fuel system, and product transfer system that presently services the 7 TPH No. 1 kiln. This equipment is located in Clay County at the existing facility north of Green Cove Springs on State Road 200 A North. The UTM coordinates are Zone 17, 427.4 E and 3326 N.

Operation shall be in accordance with the application for a permit to construct No. 1A kiln that was signed by Mr. John Kuiken on September 12, 1986, except for the changes mentioned in the Technical Evaluation and Preliminary Determination and listed as Specific Conditions of this construction permit.

Attachment:

Application received September 17, 1986.

GENERAL CONDITIONS:

b. The permittee shall retain at the facility or other location designated by this permit records of all monitoring information (including all calibration and maintenance records and all original strip chart recordings for continuous monitoring instrumentation), copies of all reports required by this permit, and records of all data used to complete the application for this permit. The time period of retention shall be at least three years from the date of the sample, measurement, report or application unless otherwise specified by department rule.

c. Records of monitoring information shall include:

- the date, exact place, and time of sampling or measurements;
- the person responsible for performing the sampling or measurements;
- the date(s) analyses were performed;
- the person responsible for performing the analyses;
- the analytical techniques or methods used; and
- the results of such analyses.

15. When requested by the department, the permittee shall within a reasonable time furnish any information required by law which is needed to determine compliance with the permit. If the permittee becomes aware that relevant facts were not submitted or were incorrect in the permit application or in any report to the department, such facts or information shall be submitted or corrected promptly.

SPECIFIC CONDITIONS:

1. If visible emissions from the wet clay feed area exceed 5 percent opacity as determined by EPA Method 9, described in 40 CFR 60, Appendix A, the permittee shall take reasonable precautions to minimize emissions which shall include applying a wetting agent to the clay feed and constructing wind breaks near the clay feed system hoppers and transfer points.

2. Clay feed to the kiln No. 1A shall not exceed 14.4 TPH (wet) or 8.6 TPH (dry).

3. Clay aggregate produced by this kiln No. 1A shall not exceed 7 TPH (dry).

SPECIFIC CONDITIONS:

4. A front end loader used to transport the product from the cooler to the sizing and storage area shall be equipped with a scale which can be used to measure the production from the kiln No. 1A.

5. If visible emissions from the coal handling equipment and product cooler exceed 10 percent opacity, as determined by EPA Method 9 described in 40 CFR 60, Appendix A, the equipment shall be enclosed and/or the material sprayed with a wetting agent to minimize the emissions.

6. Visible emissions from transporting the product to the sizing and storage area shall not exceed 20 percent opacity as determined by DER Method 9 described in Chapter 17-2, FAC.

7. Reasonable precautions, which may include planting shrubs around the perimeter of the plant and wetting the plant area, shall be taken to minimize fugitive dust emissions from the facility.

8. The sulfur content of the coal shall not exceed 3 percent by weight when coal is burned in conjunction with LBM. If coal only is burned, the sulfur content shall not exceed 1.5 percent. A certified analysis by the latest applicable ASTM method shall be used to determine the percent sulfur in each shipment of coal received at the plant. Results of the analysis shall be kept by the company for a minimum of 2 years for department inspection.

9. The sulfur content of the liquid burnable material (LBM) used in the kiln shall not exceed 2.5 percent as determined for a composite sample of the fuel burned in the kiln during the week (Sunday thru Saturday) by the latest applicable ASTM methods. Test results (company procedure) of the sulfur content of the LBM used shall be obtained for each batch received at the plant and on a composite sample of the fuel burned during each week. Results of the analysis shall be kept by the company for a minimum of 2 years for department inspection.

10. Maximum fuel input to the kiln shall not exceed an equivalent heat input of 47.6 million Btu/hr. The following combinations of fuel usage and sulfur content are allowed.

Fuel	Max. Rate	Max. Sulfur Content
LBM	476 GPH	2.5%
LBM/coal	308 GPH/0.7 TPH	2.5%/3.0%
coal	2.0 TPH	1.5%

11. Sulfur dioxide emissions shall not exceed 226 lbs/hr (1 hr avg) as determined by EPA Method 6 which is described in 40 CFR 60, Appendix A, and 75.8 lbs/hr, 30 day average, as determined by a continuous

SPECIFIC CONDITIONS:

emissions monitor that meets the performance specifications listed in 40 CFR 60, Appendix B. Method 6 tests will be conducted while the kiln No. 1A is operating at 90 to 100 percent of permitted capacity and burning 0.7 TPH of coal in the fuel mix. Test data shall include the quantity and percent sulfur of each fuel burned during the test.

12. The permittee shall conduct nitrogen oxides emission measurements on kiln No. 1A by Method 7 or any EPA approved alternative method in 40 CFR 60, Appendix A, and make reasonable adjustment to achieve the lowest nitrogen oxides emission rate. If the lowest nitrogen oxides emission rate exceed 14.2 lbs/hr (53.8 TPY), the permittee shall submit an engineering report, including test data, to justify the lowest nitrogen oxides emission rate than can be achieved by this kiln.

13. Particulate matter emissions shall not exceed the amount allowed by the process weight table, Rule 17-2.610(1), FAC, or 12.8 lbs/hr (48.5 TPY), whichever is more restrictive. Tests shall be by EPA Method 5 as described in 40 CFR 60, Appendix A, while kiln No. 1A is operating at 90 to 100 percent of it permitted capacity and burning 0.7 TPH of coal. Scrubber parameters will be recorded during the compliance test. Visible emissions from the kiln shall not exceed 20 percent opacity as determined by DER Method 9 described in Chapter 17-2, FAC.

14. The scrubber shall be equipped with instrumentation to measure the pressure drop of the gas flowing through the scrubber, the pressure of the scrubber water, and the flow (GPH) of scrubber water. The company shall log these readings each day the kiln operates and keep these records for a minimum of 2 years for department inspection.

15. Kiln No. 1A shall not be operated without the scrubber working properly or with the damper open.

16. The liquid burnable waste shall not contain ~~any~~ organic cyanides, sulfide, mercaptans, PCB's, insecticides, pesticides, herbicides, electroplating waste or radioactive materials. Florida Solite Company shall retain the manifest of each load for 2 years for department inspection.

17. The 7 TPH kiln No. 1A shall be equipped with a recording radiant pyrometer and the kiln shall be operated at temperatures above 1800°F when LBM is used as fuel. The temperature records will be retained by the company for 2 years for department inspection.

PERMITTEE:
Florida Solite Company

Permit Number: AC 10-125262
Expiration Date: August 1, 1987

SPECIFIC CONDITIONS:

18. The permittee shall order a sulfur dioxide continuous emissions monitor that meets all the specifications described in 40 CFR 60, Appendix B, Performance Specification 2, prior to operating kiln No. 1A. The monitor shall be installed on the stack and placed in operation as rapidly as is feasible. Until a permit to operate this kiln is issued, the permittee shall submit a monthly status report on the monitor and the calculated sulfur dioxide emissions, 30 day average, based on fuel consumption and certified analysis of the fuel burned.

19. Compliance tests specified in this permit shall be conducted within 30 days of placing kiln No. 1A in operation. The Northeast District shall be notified at least 15 day prior to the compliance tests.

20. The existing 7 TPH kiln No. 1 (AO 10-72240) shall not be operated when kiln No. 1A is in use. Total hours of operation of kiln No. 1 and No. 1A shall not exceed 7,600 hrs/yr.

21. The kiln and its accessory equipment shall be constructed, maintained, and operated in such a manner that the unit will not cause, suffer, allow, or permit the discharge of air pollutants which cause or contribute to an objectionable odor.

22. A complete application for a permit to operate this source, which includes all compliance test reports and at least 30 days continuous emissions monitor data for sulfur dioxide (1 hr avg), shall be submitted to the Northeast District office 90 days prior to the expiration of this permit to construct.

23. Any permit to operate issued for this system shall require routine compliance tests, quarterly reports showing 1 hr averages of the sulfur dioxide emissions from the continuous emissions monitor, and annual operation reports. It shall also limit the operation of kilns Nos. 1 and 1A to 7,600 hrs/yr (total).

Issued this 15 day of January 1987.

STATE OF FLORIDA DEPARTMENT
OF ENVIRONMENTAL REGULATION

Howard L. Rhodes

Howard L. Rhodes, P.E.
Director, Division of Environmental Programs

_____pages attached.

Florida Department of Environmental Regulation

Northeast District • Suite 200, 7825 Baymeadows Way • Jacksonville, Florida 32256-7577 • 904-448-4300

Bob Martinez, Governor | Dale Twachtmann, Secretary | John Shearer, Assistant Secretary
Ernest Frey, Deputy Assistant Secretary

PERMITTEE:

Florida Solite Company
Post Office Box 297
Green Cove Springs, Florida 32043

I.D. Number:	31JAX10000406
Permit/Cert Number:	A010-133604
Date of Issue:	02-01-91
Expiration Date:	August 1, 1995
County:	Clay
Latitude/Longitude:	30°04'04"N; 81°45'14"W
Project:	No. 1A Kiln
UTM:	E-(17)427.4; N-3326.5

This permit is issued under the provisions of Chapter(s) 403, Florida Statutes, and Florida Administrative Code Rule(s) 17-2 and 17-4. The above named permittee is hereby authorized to perform the work or operate the facility shown on the application and approved drawing(s), plans, and other documents attached hereto or on file with the department and made a part hereof and specifically described as follows:

For the operation of No. 1A clay aggregate kiln w/emissions controlled by a scrubber (Ducon Dynamics, Type UW4, Model 111, Size 108).

Located west of U.S. 17, east of S.R. 209A, north of Green Cove Springs, Clay County, Florida.

In accordance with:

1. Construction permit (CP) No. AC10-125262 issued 01-15-87
2. Certificate of Completion of Construction received 04-28-87
3. Additional information received 08-28-87
4. CP revision dated 03-30-88
5. Additional information received 06-06-88
6. Additional information received 11-28-88
7. CP revision dated 11-30-88
8. Additional information received 02-09-89
9. Additional information received 07-26-90
10. Denial issued 10-09-90
11. Petition time extension request received 10-18-90
12. Information received 11-27-90
13. Information received 12-10-90

PERMITTEE:
Florida Solite Company
Post Office Box 297
Green Cove Springs, Florida 32043

I.D. Number: 31JAX10000406
Permit/Cert: A010-133604
Date of Issue:
Expiration Date: August 1, 1995

SPECIFIC CONDITIONS:

1. The maximum operating rates are as listed below and shall not be exceeded without prior approval:

Rate	Material
14.4 TPH[1]	clay (wet)
8.6 TPH[1]	clay (dry)
7.0 TPH[2,3]	clay aggregate
476 GPH	LBM[4,5]
2.0 TPH	coal[6]
308 GPH[7]	LBM w/coal
0.7 TPH[7]	coal w/LBM

[1]input to kiln
[2]produced by kiln
[3]From CP# AC10-125262, a front end loader used to transport the product from the cooler to the sizing and storage area shall be equipped with a scale which can be used to measure the production from the kiln No. 1A
[4]LBM - liquid burnable materials (see SC #9 for specifications)
[5]LBM sulfur content shall not exceed 0.45% by wt. (see note 8)
[6]Coal sulfur content shall not exceed 0.41% by wt (see note 9)
[7]From CP #AC10-125262
[8]The sulfur content of the liquid burnable material (LBM) used in the kiln shall be determined for a composite sample of the fuel burned in the kiln during the week (Sunday thru Saturday) by the latest applicable ASTM methods. Test results (company procedure) of the sulfur content of the LBM used shall be obtained for each batch received at the plant and on a composite sample of the fuel burned during each week. Results of the analysis shall be kept by the company for a minimum of 2 years for department inspection.

[9]A certified analysis by the latest applicable ASTM method shall be used to determine the percent sulfur in each shipment of coal received at the plant. Results of the analysis shall be kept by the company for a minimum of 2 years for department inspection.

2. Testing of emissions must be performed at an operating rate of at least 90% of the rate in Specific Condition (SC) No. 1, or SC No. 3 will become effective.

3. The operating rate shall not exceed 110% of the operating rate during the most recent test except for testing purposes, but shall not exceed the rate in SC No. 1. After testing at an operating rate greater than 110% of the last test operating rate, the operating rate shall not exceed 110% of the last (submitted) test operating rate until the test report at the higher rate has been reviewed and accepted by the Department.

PERMITTEE:
Florida Solite Company
Post Office Box 297
Green Cove Springs, Florida 32043

I.D. Number: 31JAX10000406
Permit/Cert: A010-133604
Date of Issue:
Expiration Date: August 1, 1995

SPECIFIC CONDITIONS:

4. The maximum allowable emission rate for each pollutant is as follows:

Pollutant	F.A.C. Rule	lbs/hr	TPY
PM [1]	17-2.610(1)	12.8[2]	48.6 [3]
SO_2 [4]	----	----[5]	288.0 [3]
NO_x [6]	----	14.2[2]	53.96[3]
VE [7]	17-2.610(2)	20% Opacity	
Odor	----	None objectionable[2]	
UPM[8]	17-2.610(3)	See SC #5	

[1]PM - particulate matter
[2]From CP #AC10-125262
[3]Hours of operation shall not exceed 7600 hrs/yr (total for #1 kiln and #1A kiln) and shall be recorded.
[4]SO_2 - sulfur dioxide
[5]SO_2 (1-hr avg) shall not exceed 226 lbs/hr (872 ppm) and SO_2 (30 day avg) shall not exceed 75.8 lbs/hr (292 ppm)
[6]NO_x - nitrogen oxides
[7]VE - visible emissions from the kiln
[8]UPM - unconfined particulate matter

5. Unconfined particulate matter emissions shall be controlled by complying with the reasonable precautions listed below, but shall not be limited to those listed:

1. From wet clay feed area
   1. Apply a wetting agent
   2. Construct wind breaks near hoppers and transfer points
2. From coal handling and product coller
   1. Enclose equipment
   2. Or use a wetting agent
3. From transporting product to sizing and storage area
   1. Use a wetting agent

6. Test the emission for the following pollutant(s) at the interval(s) indicated, notify the Department 14 days prior to testing, and submit the test report documentation to the Department within 45 days after completion of the testing:

Pollutant	Interval	Test Method(s)
PM [1]	12 Months from 04-30-90	EPA 5
SO_2 [2]	12 Months from 04-30-90	EPA 6
NO_x	12 Months from 04-30-90	EPA 7
VE [3]	12 Months from 04-30-90	DER 9
VE_1 [4]	12 Months from 04-30-90	EPA 22[5]
VE_2 [6]	12 Months from 04-30-90	EPA 22[5]
VE_3 [7]	12 Months from 04-30-90	EPA 22[5]

PERMITTEE:
Florida Solite Company
Post Office Box 297
Green Cove Springs, Florida 32043

I.D. Number: 31JAX10000406
Permit/Cert: A010-133604
Date of Issue:
Expiration Date: August 1, 1995

SPECIFIC CONDITIONS:

SC #6 Cont'd.

[1]Scrubber parameters shall be recorded during the compliance test.
[2]A CMS report is required (See SC #8)
[3]VE from the kiln
[4]VE_1 from the wet clay feed area
[5]See 01-28-91 file note
[6]VE_2 from the coal handling equipment and product cooler
[7]VE_3 from transporting the product to the sizing and storage area

Tests and test reports shall comply with the requirements of Florida Administrative Code Rule 17-2.700(6) and (7), respectively.

7. In each test report, submit the maximum input/production rate at which this source was operated since the most recent test.

8. A SO_2 continuous monitoring system (CMS) report shall be postmarked by the 30th day following the end of each calendar quarter and shall show the 1 - hr averages of the sulfur dioxide emissions from the CMS per the CP.

9. The liquid burnable materials shall not contain inorganic compounds, organic cyanides, sulfides, lachramates or mercaptans. No. PCB's, insecticides, pesticides, herbicides or poisonous, explosive, corrosive, reactive or radioactive materials (from LBM specifications received 08-04-83 in #1 kiln file). The manifest of each load shall be retained for 2 years for department inspection.

10. The #1A kiln shall be equipped with a recording radiant pyrometer and the kiln shall be operated at temperatures above 1800°F when LBM is used as fuel. The temperature records will be retained by the company for 2 years for department inspection.

11. The scrubber shall be equipped with instrumentation to measure the pressure drop of the gas flowing through the scrubber, the pressure of the scrubber water, and the flow (GPH) of scrubber water. The company shall log these readings each day the kiln operates and keep these records for a minimum of 2 years for department inspection.

12. Kiln No. 1A shall not be operated without the scrubber working properly or with the damper open.

13. The permittee shall measure the volumetric flow rate in the stack by EPA Method 2 (43 FR 11984) once each month and maintain a record of the ammeter readings for the fan for the kiln. A summary of this data will be included with the quarterly report for the continuous emissions monitor.

14. Reasonable precautions, which may include planting shrubs around the perimeter of the plant and wetting the plant area, shall be taken to minimize fugitive dust emissions from the facility.

PERMITTEE:
Florida Solite Company
Post Office Box 297
Green Cove Springs, Florida 32043

I.D. Number: 31JAX10000406
Permit/Cert: A010-133604
Date of Issue:
Expiration Date: August 1, 1995

SPECIFIC CONDITIONS:

15. Submit an annual operation report for this source on the form supplied by the Department for each calendar year on or before March 1.

16. Any revision(s) to a permit (and application) must be submitted and approved prior to implementing.

17. The ID No. for this source is to be used on all correspondence.

18. Forms for the renewal will be sent 5 months prior to 08-01-95 and the completed forms with test results are due 90 days prior to 08-01-95.

Executed in Jacksonville, Florida.

STATE OF FLORIDA DEPARTMENT
OF ENVIRONMENTAL REGULATION

Ernest E. Frey, P.E.
Deputy Assistant Secretary

FILING AND ACKNOWLEDGEMENT
FILED, on this date, pursuant to §120.52, Florida Statutes, with the designated Department Clerk, receipt of which is hereby acknowledged.
Clerk 2/1/91 Date

KOOGLER & ASSOCIATES
ENVIRONMENTAL SERVICES
4014 NW THIRTEENTH STREET
GAINESVILLE, FLORIDA 32609
904/377-5822 ▪ FAX 377-7158

KA 150-90-07

March 4, 1991

Mr. Andrew Kutyna
Florida Department of
Environmental Regulation
Northeast District
Suite B-200
7825 Baymeadows Way
Jacksonville, FL 32256-7577

Subject: Florida Solite Company
Permit A010-133604
Kiln 1A

Dear Mr. Kutyna:

During our meeting on February 6, 1991, at the Florida Solite Company offices, several of the specific conditions of Permit A010-133604 were discussed with the intent of amending the conditions. This letter is to provide the information that we promised regarding the sulfur content of coal as addressed in Specific Condition No. 1 of the referenced permit.

Specific Condition No. 1, in part, limits the firing rate of coal in Kiln 1A to 2.0 tons per hour when coal is used exclusively as fuel for the kiln and further limits the sulfur content of the coal to 0.41 percent by weight. The limit on the coal firing rate established by the subject permit is consistent with the limit contained in Air Construction Permit AC10-125262; the permit that the subject permit is replacing. The coal sulfur content of 0.41 percent, established by the subject operating permit, is, however, considerably more stringent than the limit of 1.5 percent established by the construction permit. During our meeting, we discussed the possibility of increasing the allowable sulfur content of coal to the 1.5 percent allowed by the construction permit.

As background information, coal will be used by Solite as fuel for the three lightweight aggregate kilns only in the event that liquid fuels are unavailable. In the past six or seven years, coal has only been fired to the kilns during compliance testing and then, only to demonstrate that the kilns can operate in compliance with permit conditions while being fired with coal. During these compliance test periods, coal firing accounted for only 10-30 percent of the heat input to the kilns.

Even though coal has been used very sparingly in the past, it is imperative to Solite that the ability to use coal be maintained in the event of a fuel related emergency. As we discussed during our meeting, natural gas is not available to Solite and Solite does not have the facilities available to provide on-site storage of sufficient virgin fuel oil to be used as a backup fuel. Coal is the only feasible backup fuel available to Solite.

Regarding the limit on the sulfur content of coal contained in the subject permit (0.41 percent), we would like to restate our position that, to the best of our knowledge, such coal is not available to Solite. There are some high-ash, low-BTU western coals with this sulfur content but the availability of these coals to Solite would be extremely limited and, because of the low heating value, the coals cannot be used for lightweight aggregate production. Solite personnel have commented, based on their knowledge of coal supplies and Solite's ownership of coal mining interests, that they are not aware of any such coal in the eastern United States. Additionally, I have reviewed the results of the analyses of over 1300 Kentucky coals that I have on file and found that the lowest reported sulfur content for all of these coals is 0.6 percent. Thus, from a practical standpoint, a sulfur limit of 0.41 percent in coals that can be fired by Solite effectively precludes Solite from burning coal and, hence, from having a backup fuel. Under these conditions, if Solite was faced with a curtailment of liquid fuel, they would have no option but to shut down.

During our meeting of February 6, 1991, you asked that we provide information that would demonstrate that Solite could operate in compliance with the sulfur dioxide limiting standards imposed by the subject air operating permit and the referenced air construction permit while burning coal with a 1.5 sulfur content. At a coal firing rate of 2.0 tons per hour and a coal sulfur content of 1.5 percent, the maximum potential sulfur dioxide emissions from coal would be 120.0 pounds per hour (see attached calculation sheet). Under these conditions, the maximum hourly sulfur dioxide emissions that could be contributed by clay without the permitted hourly sulfur dioxide emission limit of 226.0 pounds per hour being exceeded would be 106.0 pounds per hour (226 - 120 = 106 lb/hr). Based upon information submitted to the Department with the application for Construction Permit AC10-125262 (copy attached), the average amount of sulfur dioxide contributed per ton of dry clay fed to the Solite kilns is 6.02 $lbSO_2$/ton with a standard deviation of 2.47 $lbSO_2$/ton.

At a dry clay feed rate of 8.6 tons per hour (permitted by Specific Condition No. 1 of the subject permit), the 106 pounds of sulfur dioxide per hour allowable from clay equates to 12.3 pounds of SO_2 per ton of clay.

This sulfur dioxide generation rate is 2.6 standard deviations above the average clay sulfur dioxide generation rate of 6.02 pounds per ton. Statistically, this means that 99.5 percent of the time, Solite can operate Kiln 1A at full capacity while burning coal with a 1.5 sulfur content and operate in compliance with the sulfur dioxide emission limiting standard of the subject permit.

The assurance provided by the above data, the further assurance provided by the continuous sulfur dioxide emission monitor that has been certified for Kiln 1A and the fact that coal will only be burned in the unlikely event that the liquid fuels are not available should be more than an adequate basis for the Department to permit the use of coal with a 1.5 percent sulfur content.

If there are any questions regarding this information or if additional information should be necessary, please do not hesitate to contact me.

Very truly yours,

KOOGLER & ASSOCIATES

John B. Koogler, Ph.D., P.E.

JBK:wa
Enc.

cc: Mr. George Williamson, Solite Corporation
Mr. Tony Saunders, Florida Solite Company

KOOGLER & ASSOCIATES

FLORIDA SOLITE COMPANY
SO2 EMISSION RATE ANALYSIS

Potential SO_2 Generated by Coal

Feed Rate	=	2.0 tph
	=	4000 lb/hr
Sulfur Content	=	1.5%
Potential SO_2	=	4000 lb/hr x (0.015 x 2)lbSO_2/lb coal
	=	120.0 lb/hr

Maximum Permitted SO_2 Emission Rate

= 226.0 lb/hr

Maximum SO_2 from Clay	=	226.0 - 120.0
	=	106.0 lb/hr

At a Clay Feed Rate of 8.6 tph

= 106.0 lb/hr/8.6 tph
= 12.3 lb SO_2/ton clay

Average SO_2 Production Rate from Clay

= 6.02 lb/ton (see attached) with 2.47 lb/ton std. deviation.

The 12.3 lb/ton exceeds the 6.02 lb/ton average by 6.3 lb/ton or by 2.6 (6.3/2.47) standard deviations. From statistical tables for the normal distribution, 2.6 standard deviations above the average will assure inclusion of 99.5% of all data points. Thus, 99.5% of the clays used by Solite will have a SO_2 generation rate less than 12.3 lb/ton.

KOOGLER & ASSOCIATES

Best Available Copy

AC 10-125262

STATE OF FLORIDA

DEPARTMENT OF ENVIRONMENTAL REGULATION

DER

SEP 17 1986

BAQM

NORTHEAST DISTRICT
3426 BILLS ROAD
JACKSONVILLE, FLORIDA 32207

BOB GRAHAM
GOVERNOR
VICTORIA J. TSCHINKEL
SECRETARY
G. DOUG DUTTON
DISTRICT MANAGER

APPLICATION TO ~~OPERATE~~/CONSTRUCT AIR POLLUTION SOURCES

SOURCE TYPE: Lightweight Aggregate Kiln [X] New[1] [ ] Existing[1]

APPLICATION TYPE: [X] Construction [ ] Operation [ ] Modification

COMPANY NAME: Florida Solite Co. COUNTY: Clay

Identify the specific emission point source(s) addressed in this application (i.e. Lime Kiln No. 4 with Venturi Scrubber; Peaking Unit No. 2, Gas Fired) No. 1A Kiln

SOURCE LOCATION: Street SR 209A North of Green Cove Springs City Green Cove Springs

UTM: East (17)427.400 km North 3326.500 km

Latitude 30 ° 04 ' 09 "N Longitude 81 ° 45 ' 11 "W

APPLICANT NAME AND TITLE: John Kuiken, Plant Manager

APPLICANT ADDRESS: Post Office Box 297, Green Cove Springs, FL 32043

SECTION I: STATEMENTS BY APPLICANT AND ENGINEER

A. APPLICANT

I am the undersigned owner or authorized representative* of Florida Solite Co.

I certify that the statements made in this application for a Construction permit are true, correct and complete to the best of my knowledge and belief. Further I agree to maintain and operate the pollution control source and pollution contrc facilities in such a manner as to comply with the provision of Chapter 403, Florid Statutes, and all the rules and regulations of the department and revisions thereof. also understand that a permit, if granted by the department, will be non-transferabl and I will promptly notify the department upon sale or legal transfer of the permitte establishment.

*Attach letter of authorization

Signed: John Kuiken

John Kuiken, Plant Manager
Name and Title (Please Type)

Date: 9/12/86 Telephone No. (904) 284-9271

B. PROFESSIONAL ENGINEER REGISTERED IN FLORIDA (where required by Chapter 471, F.S.)

This is to certify that the engineering features of this pollution control project hav been ~~designed~~/examined by me and found to be in conformity with modern engineerin principles applicable to the treatment and disposal of pollutants characterized in th permit application. There is reasonable assurance, in my professional judgment, tha

[1] See Florida Administrative Code Rule 17-2.100(57) and (104)

ATTACHMENT 4

STACK GAS SO_2 CONTRIBUTED BY CLAY
DURING 37 EMISSION TESTS ON
KILN NO. 1A BETWEEN
OCTOBER 1984 AND JULY 1986

STACK GAS SO_2 CONTRIBUTED BY CLAY DURING
37 EMISSION TESTS

FLORIDA SOLITE COMPANY
GREEN COVE SPRINGS, FLORIDA

OCTOBER 1984 - JULY 1986

Date/Test	Fuel SO_2 (lb/hr) Coal	LBM	Total	Total SO_2(1) (lb/hr)	Clay SO_2(2) (lb/hr)	Clay Feed(3) (tph)	Clay SO_2 (lb/ton)
10/26/84							
1	45.5	18.3	63.8	176.7	112.9	12.4	9.09
2	45.5	18.3	63.8	160.8	97.0	12.4	7.81
3	45.5	18.3	63.8	140.9	77.1	12.4	6.21
5/22-24/85							
1	13.0	5.9	18.9	99.1	80.2	12.3	6.52
2	13.0	5.9	18.9	94.2	75.3	12.3	6.12
3	17.2	0.8	18.0	104.4	86.4	12.3	7.02
4	17.2	0.8	18.0	84.5	66.5	12.3	5.41
2/27-28/86							
1	0.0	1.2	1.2	70.8	69.6	11.8	5.90
2	0.0	1.5	1.5	39.8	38.3	9.1	4.21
3	0.0	0.9	0.9	57.6	56.7	9.0	6.30
4	0.0	0.9	0.9	42.0	41.1	12.1	3.40
4/2/86							
1	0.0	3.8	3.8	57.7	53.9	10.1	5.34
2	0.0	2.3	2.3	19.9	17.6	9.1	1.93
3	0.0	2.0	2.0	12.3	10.3	9.4	1.10
5	0.0	1.5	1.5	17.6	16.1	9.8	1.64
6	0.0	2.3	2.3	43.2	40.9	9.8	4.17
5/8-16/86							
1	0.0	2.8	2.8	21.7	18.9	10.15	1.86
2	0.0	3.1	3.1	70.8	67.7	10.30	6.57
3	0.0	3.4	3.4	93.1	89.7	10.30	8.71
4	0.0	2.4	2.4	59.3	56.9	8.0	7.11
5	0.0	2.4	2.4	57.5	55.1	8.0	6.89
6	0.0	2.3	2.3	56.2	53.9	8.8	6.13
7	0.0	2.8	2.8	47.8	45.0	8.8	5.11
8	0.0	3.3	3.3	48.2	44.9	8.8	5.10
9	0.0	3.1	3.1	55.5	52.4	8.8	5.95
6/13/86							
1	0.0	3.0	3.0	39.6	36.6	9.2	3.98
2	0.0	3.0	3.0	58.4	55.4	9.2	6.02
3	0.0	3.0	3.0	118.0	115.0	9.2	12.50
5	0.0	3.0	3.0	86.5	83.5	9.2	9.08
6	0.0	3.0	3.0	82.4	79.4	9.2	8.63
7/22-23/86							
1	0.0	13.0	13.0	62.2	49.2	8.0	6.15
2	0.0	13.0	13.0	85.8	72.8	8.0	9.10
4	0.0	13.0	13.0	55.8	42.8	8.0	5.36
5	0.0	13.0	13.0	71.0	58.0	8.0	7.24
6	0.0	13.4	13.4	43.8	30.4	8.0	3.80
7	0.0	15.3	15.3	50.3	35.0	7.5	4.67
8	0.0	12.7	12.7	95.1	82.4	7.7	10.70

Average = 6.02

Range = 1.10-12.05

Std. Dev. = 2.47

90% CL = 1.9-10.1

(1) Measured by EPA Method 6 or 8

BEST AVAILABLE COPY

Florida Department of Environmental Regulation
Twin Towers Office Bldg. • 2600 Blair Stone Road • Tallahassee, Florida 32399-2400
Lawton Chiles, Governor
Carol M. Browner, Secretary

November 5, 1991

CERTIFIED MAIL - RETURN RECEIPT REQUESTED

Mr. Tony Saunders
Florida Solite Corporation
Post Office Box 297
Green Cove Springs, Florida 32043

Dear Mr. Saunders:

Re: Amendment of Permit No. AC 10-125262

The Department is in receipt of Mr. John Koogler's July 15, 1991, letter requesting clarification on the allowable contaminant content of the liquid burnable materials (LBM) used for fuel in the clay kilns at Florida Solite's Green Cove Springs, Clay County, Florida light aggregate plant. Part of the request is acceptable and Specific Condition No. 16 of construction permit No. AC 10-125262 is amended:

From:

The liquid burnable waste shall not contain any organic cyanides, sulfide, mercaptans, PCB's, insecticides, pesticides, herbicides, electroplating waste or radioactive materials. Florida Solite Company shall retain the manifest of each load for 2 years for Department inspection.

To:

The liquid burnable waste (LBM) shall not contain any of the following contaminants above the detectable levels by the appropriate analytical procedures (40 CFR 263, Appendix III, 7/1/90): organic cyanides, sulfides, mercaptans, PCB's, insecticides, pesticides, herbicides, electroplating waste, and radioactive material. The detectable level for PCB's is considered to be 2 ppm (40 CFR 761.20(d)(2) Testing of used Oil Fuel, 7/1/88). Florida Solite Company shall retain the manifest of each load for 2 years for Department inspection.

Mr. Tony Saunders
Page Two
November 5, 1991

A copy of this letter must be attached to the referenced permit and shall become a part of the permit.

Sincerely,

Carol M. Browner
Secretary

CMB/kt

attachment

cc: A. Kutyna, NE District
J. Koogler, P.E.

KOOGLER & ASSOCIATES
ENVIRONMENTAL SERVICES
4014 NW THIRTEENTH STREET
GAINESVILLE, FLORIDA 32609
904/377-5822 ▪ FAX 377-7158

KA 150-90-07

December 11, 1991

Mr. C. H. Fancy
Florida Department of
Environmental Regulation
Twin Towers Office Building
2600 Blair Stone Road
Tallahassee, FL 32399-2400

Subject: Clay County - AP
Florida Solite Company
Kiln 1A, Permit AC10-125262
Permit Modification Request

Dear Mr. Fancy:

On July 15, 1991, the Florida Solite Company requested a change in the definition of the liquid fuels, burned in Kiln 1A, in the above referenced permit.

The definition of the liquid burnable material (LBM) proposed by Solite would have allowed for a polychlorinated biphenyls (PCBs) content in the fuel up to 50 ppm. The FDER response (permit amendment dated November 5, 1991) allows for a PCB content up to 2 ppm only. Consequently, Solite is hereby requesting that Specific Condition 16 in the above referenced permit be changed to allow a PCB content in the LBM of up to 50 ppm given the information below.

PCBs are regulated by federal laws under the Toxics Substance Control Act in 40CFR761. Included in this rule is a definition of excluded PCB products.

> EXCLUDED PCB PRODUCTS - means PCB materials which appear at concentrations less than 50 ppm, including but not limited to ....

Solite is proposing the 50 ppm PCB concentration limit for LBM in line with the above provisions of 40CFR761. Background information on this subject is presented in Attachment 1.

The proposed increase in PCBs burned will result in an increase in the products of PCB combustion including carbon dioxide, carbon monoxide, hydrogen chloride (HCl) and water vapor. Of consequence would be the HCl emissions and are therefore estimated below:

Increase in PCBs burned

= 476 gal LBM/hr x 8.0 lb/gal x (50-2) x 10^{-6} lb PCB/lb LBM

= 0.18 lb PCB/hr

Increase in HCl emissions

= 0.18 lb PCB/hr x 0.55 lb Cl/lb PCB x 36.5 lb HCl/35.5 lb Cl

= 0.10 lb HCl/hr x 7600 hrs/yr x ton/2000 lb

= 0.40 tpy HCl

Increase in HCl concentrations

= [0.1 lb HCl/hr x 385 ft^3/mole x mole/36.5 lb HCl]/
[30,000 ft^3 flue gas/min x 60 min/hr] x 10^6

= 0.60 ppm

The above calculations are based on:

A. Currently permitted LBM feed rate of 476 gallons per hour.

B. Thermal destruction of all PCBs (See Attachment 2).

C. Cl content in PCB of 55% (See Attachment 3).

D. Flue gas flow rate of 30,000 cubic feet per minute (See Attachment 4).

Considering that the estimated increase in HCl emissions is not significant and that the increase in HCl concentration in the exit gas stream is far below even the error margin associated with HCl concentration measurements, it is requested that Specific Condition 16 be <u>amended</u> by letter.

If you have any questions, please do not hesitate to give me a call.

Very truly yours,

KOOGLER & ASSOCIATES

John B. Koogler, Ph.D., P.E.

JBK:wa
Enc.

c: Mr. E. Martin, Solite
Mr. G. Williamson, Solite
Mr. T. Saunders, Florida Solite
Mr. A. Galliano, Florida Solite

Polychlorinated Biphenyls (PCBs) are regulated by federal laws codified at 40CFR761. The rules of this section are included under the Toxics Substance Control Act. Rules established under the Resource Conservation and Recovery Act (RCRA), codified at 40CFR261, 264, 265, 266 and 271, address PCBs but reference rules of 40CFR761. In Rule 40CFR761.1(a), the following definitions are given:

> **EXCLUDED PCB PRODUCTS** - means PCB materials which appear at concentrations less than 50 ppm, including but not limited to ...
>
> **AND QUANTIFIABLE LEVEL/LEVEL OF DETECTION** - means 2 micrograms per gram from any resolvable gas chromatographic peak, i.e. 2 ppm.

Thus, by definition, materials with less than 50 ppm PCBs are excluded from most rules of 40CFR761 and materials with less than 2 ppm PCBs are considered to have undetectable quantities of that compound.

In promulgating rules for the burning of used oil for energy recovery (as finally promulgated at 40CFR266.40 on November 29, 1985), EPA had originally considered establishing a limit of 50 ppm for PCBs. In the preamble to the final rule, the following reason for not including the limit is stated by EPA:

> PCBs are not included in the final specification promulgated today (11/29/85), however, because commentators indicated that cross-reference (with 40CFR761) caused confusion.

On November 6, 1987, the Florida Department of Environmental Regulation, Bureau of Air Quality Management, issued a policy statement regulating used oil burning. That memo expanded upon a Department memo of January 5, 1987, and was based upon information developed by the Department and presented in September 1987 in a paper entitled, "A Proposal to Regulate the Emissions from the Burning of Used Oil" (presented at the 1987 Annual Conference, Florida Section, Air Pollution Control Association by Barry D. Andrews, FDER, Tallahassee, Florida). In the referenced paper, it is stated that the Department study was based upon a report entitled, "A Technical Study of Regulatory Options for Used Oil Management in Florida." Data from the referenced study are presented showing the results of PCBs analyses in 61 samples of used oil from Florida. The data show a mean concentration of 21.8 ppm of PCBs with a range of 7.6-26.0 ppm. The limited detection for PCBs is listed as 5.0 ppm.

The January 5, 1987, Department memo on used oil as a fuel states that:

> It is our (FDER) position as well as that of EPA, that the burning for energy recovery of used oil containing <u>any</u> concentration of PCBs was prohibited as of October 1, 1984. This conclusion is based on 40CFR761.20(a) ....

The Department memo of January 5, 1987 continues:

> ...EPA Headquarters had indicated to Department staff that EPA is considering amending federal PCB regulations to allow the burning for energy recovery of used oil containing less than 50 ppm PCBs.

On June 28, 1988, EPA did amend 40CFR761 to include Section 761.20(e); a rule addressing the burning of fuels with less than 50 ppm PCBs. The rule requires that fuels with less than 50 ppm PCBs can be burned in industrial furnaces and other qualified burners and further, exempts from the rules fuels with less than quantifiable levels (less than 2 ppm) of PCBs.

As the Department policy of January 5, 1987 was based on 40CFR761 and as the memo anticipated the change in 40CFR761 related to the burning of fuels containing less than 50 ppm PCBs, the current Department policy should reflect the clarification to 40CFR761, promulgated on June 28, 1988. Regardless, 40CFR761 identified the quantifiable level/level of detection of PCBs at 2 ppm even prior to the date of the referenced Department memo.

A review of federal policies and regulations regarding PCBs at low levels is clear. It was EPA's original intent to include a limit of 50 ppm for PCBs in <u>on-specification</u> used oil fuel. This limit was not included, however, to eliminate possible confusion resulting from cross-referencing federal regulations. This limit was incorporated into the rules, however, by the amendment to 40CFR761 on June 28, 1988. This inclusion was prudent as it is apparent, based upon the study referenced herein, that PCBs are commonly found in used oil (ranging from 7.6 to 26.0 ppm in 61 samples of used oil collected in Florida).

Most explicit in the rules is the definition in 40CFR761 that establishes a limit of detection for PCBs of 2 ppm. Regardless of regulation or FDER policy, it would be difficult to argue that a compound present at levels below the detectable limit should be regulated.

ATTACHMENT 2

FIELD EVALUATION OF HAZARDOUS WASTE DISPOSAL IN INDUSTRIAL PROCESS KILNS

by

A. W. Wyss, C. Castaldini, and M. M. Murray
Acurex Corporation
Energy & Environmental Division
555 Clyde Avenue
P. O. Box 7555
Mountain View, California 94039

Contract No. 68-02-3176

Project Officer: Robert E. Mournighan
Thermal Destruction Branch
Alternative Technologies Division
Hazardous Waste Engineering Research Laboratory
Cincinnati, Ohio 45268

for

HAZARDOUS WASTE ENVIRONMENTAL RESEARCH LABORATORY
OFFICE OF RESEARCH AND DEVELOPMENT
U. S. ENVIRONMENTAL PROTECTION AGENCY
CINCINNATI, OHIO 45268

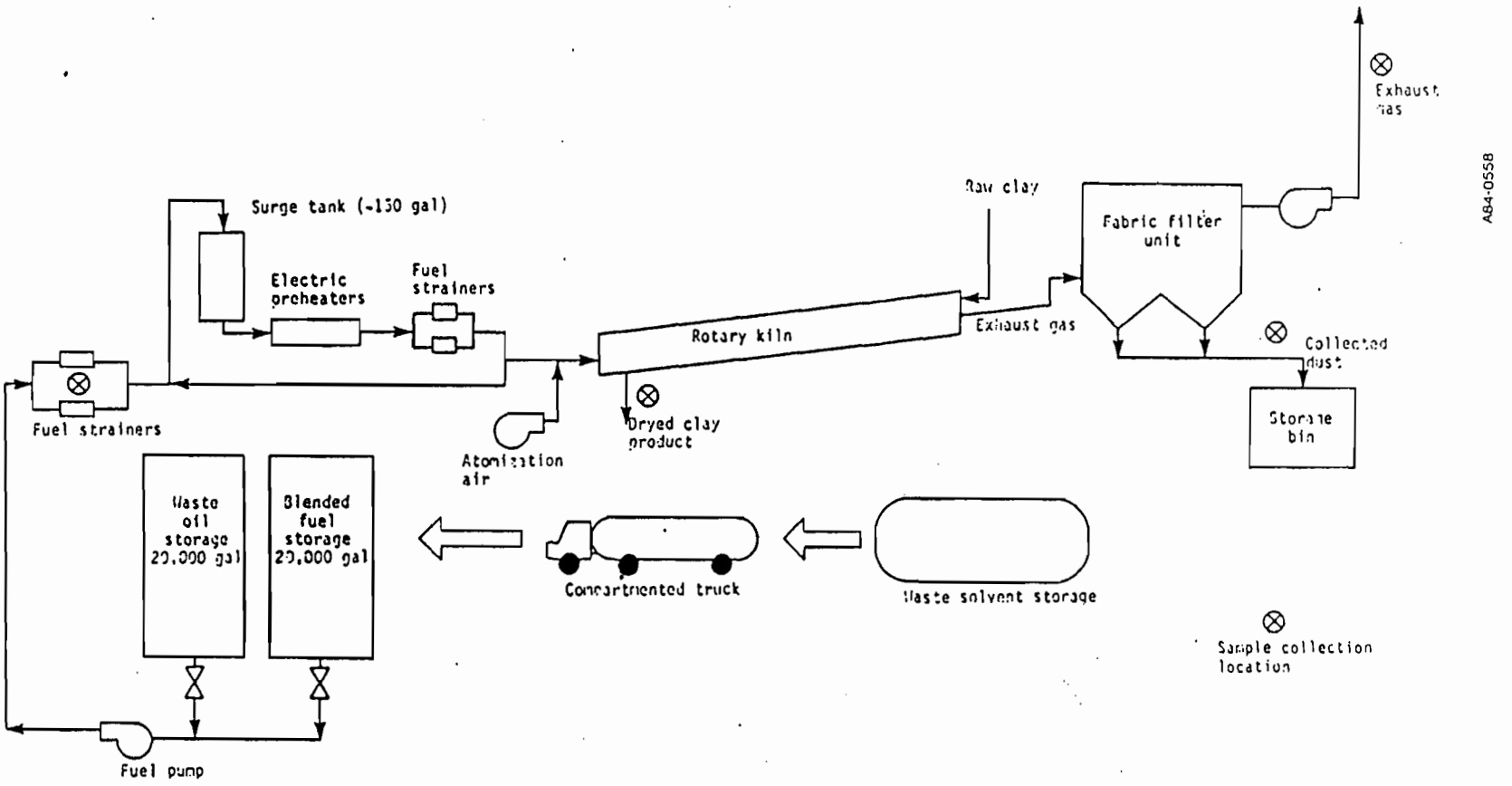

Figure 1. Process flow schematic and sample collection locations -- site I.

TABLE 1-6. SUMMARY OF VOLATILE POHC DRE'S -- SITE I

Compound	Firing rate (mg/s)	Emission rate (μg/s)	Test average[b] DRE, (%)
1,1,1-trichloroethane	74-81 (79)	<0.5-89 (35)	99.88-99.98 (99.95)
Trichloroethylene	7.1-8.5 (7.8)	<0.5-19 (5.1)	99.8-99.994 (99.93)
Benzene	7.6-13.5 (10.5)	110-3,800 (563)	82.5-98.5 (94.6)
Tetrachloroethylene	27.1-35.2 (31)	1.5-77 (16.5)	99.87-99.989 (99.95)
Toluene	184-215 (197)	170-1,250 (330)	99.7-99.90 (99.8)
Chlorobenzene	2.5-3.0 (2.7)	11-26 (17)	99.3-99.4 (99.3)
2-butanone (MEK)	70-90 (81)	1.8-176 (39.1)	99.93-99.98 (99.95)
1,1,2-trichloro-2,2,1-trifluoroethane (Freon 113)[a]	1,220-1,400 (1,340)	6.2-257 (62)	99.988-99.998 (99.995)

[a]Not a RCRA Appendix VIII compound. Freon 113 was added to the fuel feed for these performance tests.
[b]"Test average" represents an average of three runs obtained each test day. Number in parentheses is the average of all DRE measurements.

ATTACHMENT 3

Disposal of Polychlorinated Biphenyls (PCBs) and PCB-Contaminated Materials
Volume 1

FP-1207, Volume 1
Research Project 1263-1

Final Report, October 1979

Prepared by

STEARNS, CONRAD AND SCHMIDT CONSULTING ENGINEERS, INC.
4014 Long Beach Boulevard
Long Beach, California 90807

Prepared for

Electric Power Research Institute
3412 Hillview Avenue
Palo Alto, California 94304

EPRI Project Manager
Dean M. Golden
Fossil Fuel and Advanced Systems Division

Table 3-1

EMPIRICAL FORMULATION, MOLECULAR WEIGHTS, AND CHLORINE PERCENTAGE IN PCBs*

Empirical Formula Chlorobiphenyls	Molecular Weight**	Percent Chlorine**	Number of Isomers
$C_{12}H_{10}$	154	0	1
$C_{12}H_9Cl$	188	18.6	3
$C_{12}H_8Cl_2$	222	31.5	12
$C_{12}H_7Cl_3$	256	41.0	24
$C_{12}H_6Cl_4$	290	48.3	42
$C_{12}H_5Cl_5$	324	54.0	46
$C_{12}H_4Cl_6$	358	58.7	42
$C_{12}H_3Cl_7$	392	62.5	24
$C_{12}H_2Cl_8$	426	65.7	12
$C_{12}HCl_9$	460	68.5	3
$C_{12}Cl_{10}$	494	79.9	1

*Ref. 29
**Based on Cl^{35}

Table 6-8

PROPERTIES OF PCB INCINERATOR DESIGN FEED

Wastes	Wt Percent	% Chlorine	Properties of Waste Types Sp Gravity	LHV,Btu/lb	HHV,Btu/lb
Capacitors					
PCBs (1016 or 1242)	25	42.5	1.40	8,950	9,430
Paper	33	0.0	--	7,570	8,200
Ash	42*	0.0	--	0	0
Subtotal, Capacitor Components		10.5	--	4,740	5,060
Liquid PCBs from Transformers		54.0	1.50	7,100	7,500
Wash Solvents		0.0	0.88	17,700	18,500
Total Feed to Incinerator†		21.5#	--	9,847	10,353

*Equals 14 percent of the total feed
†Assumes equal weights of capacitors, liquid PCBs, and wash solvents
#Equals 25.0 percent of the combustibles in the total feed

ATTACHMENT 4

PARTICULATE MATTER, SULFUR DIOXIDE AND NITROGEN OXIDES EMISSION MEASUREMENTS

KILN NO. 1A

FLORIDA SOLITE COMPANY
GREEN COVE SPRINGS, FLORIDA

Permit No. AC10-125262
(Expires June 30, 1989)

April 22, 1989

KOOGLER & ASSOCIATES
ENVIRONMENTAL SERVICES
4014 N.W. 13TH STREET
GAINESVILLE, FLORIDA 32609
(904) 377-5822

KOOGLER & ASSOCIATES, ENVIRONMENTAL SERVICES

Source Sampling Calculations

Plant: FLA. SOLITE / GREEN COVE SPRINGS,FLA — Date: 4/28/89
Stack: NO.1A KILN — Run 1 From 0914 - 1030
Weather: CLEAR — Total Time: 60 Min

Stack Area	17.41	Sq Ft	Nozzle Area	.000521	Sq Ft
Stack Temp	151	Deg F	Meter Temp	81	Deg F
Stack Pressure	29.91	"Hg	Baro. Pressure	29.89	"Hg
Stack Vel Head	.614	"H2O	Meter Press Diff	1.94	"H2O
			Meter Volume	46.103	cf
Pitot Tube Factor	.84		Condensate Volume	238	ml

1.	Volume Water Vapor	11.210	SCF
2.	Gas Volume Sampled - STPD	45.165	SCFD
3.	Total Volume	56.374	SCF
4.	Moisture in Stack Gas - Volume Fraction	.199	
5.	Dry Stack Gas - Volume Fraction	.801	
6.	Molecular Weight of Stack Gas - Dry Basis	29.00	
7.	Molecular Weight of Stack Gas - Stack Conditions	26.81	
8.	Specific Gravity of Stack Gas Relative to Air	.92	
9.	Excess Air - Percent		
10.	Average Stack Velocity	2307.4	FPM
11.	Average Stack Gas Flow Rate	40172	ACFM
12.	Actual Stack Gas Flow Rate Dry	32184	CFMD
13.	Stack Gas Flow Rate STPD	27802	SCFMD
14.	Percent Isokinetic	90.4	%

Probe Wash:	11.60 Mg	.0040 Gr/SCF	.94 Lbs/Hr
Filter:	145.70 Mg	.0497 Gr/SCF	11.87 Lbs/Hr
===Totals===	157.30 Mg	.0536 Gr/SCF	12.81 Lbs/Hr

ATTACHMENT 10

PRE-COMPLIANCE CERTIFICATION FORMS
FOR FLORIDA SOLITE

KOOGLER & ASSOCIATES

PRE-COMPLIANCE CERTIFICATION

FLORIDA SOLITE COMPANY
GREEN COVE SPRINGS, FLORIDA

INTRODUCTION

The development of pre-compliance certification conditions can take several forms as described in 40CFR266.103. The requirements of this Part that describe the pre-certification requirements for Florida Solite Company facility are summarized in Appendix A.

The pre-compliance certification requirements for Solite can be summarized as:

1. General facility information;

2. Estimated uncontrolled emissions of particulate matter, metals, HCl and Cl_2;

3. Estimated controlled emissions of particulate matter, metals, HCl and Cl_2;

4. Determination of Tier III emission limits for metals, HCl and Cl_2. (The Tier III emission limits are determined by site-specific air quality modeling.); and

5. Comparison of controlled emissions with the Tier III emission limits to demonstrate compliance.

The development of this information is described in the following sections and follows the outline presented in Figure 1.

AIR QUALITY MODELING

The air quality modeling required to establish the Tier III emission limits for metals and chlorine compounds was conducted in accordance with EPA modeling guidelines (Guideline on Air Quality Models, Revised, EPA-450/2-78-027R, July 1986). The plant and geographic features required for the modeling are summarized on Pre-compliance Certification Form 4C (PC-4C).

Following the development of source parameters and the dimensions of buildings that could cause plume downwash, representative receptors were established at the Solite property boundaries and on a uniform grid beyond the property boundaries. The locations of these receptors are shown on the U.S. Geological Survey (USGS) map included with each site certification document. Once the receptors were located, the elevation of each receptor was determined from the USGS map.

The SCREEN air quality model was used to calculate the final, critical terrain feature elevation; that is, the elevation of terrain features that might be impacted by the center line of the plume(s) discharged from the Solite facility. Receptors with elevations at or above the critical terrain feature elevation were identified and an air quality impact analysis for these receptors was conducted with the COMPLEX air quality

model.

An impact analysis was also conducted at all receptors (both those above and below the critical terrain feature elevation) with the Industrial Source Complex - Short Term (ISC-ST) air quality model. The maximum impact for each receptor (as determined by the COMPLEX or ISC-ST model) was selected as the controlling impact.

The highest predicted annual impact occurring at any receptor was selected as the concentration to which the Maximum Exposed Individual (MEI) would be exposed. All modeling data and a summary of modeling results are included in Appendix B.

The modeling conducted with both the COMPLEX and ISC-ST models utilized meteorological data identified on Form PC-4C. The emission rate used for the air quality modeling was an arbitrary emission rate; typically 5.0 or 10.0 grams per second. The specific emission rate used for the modeling described herein is reported on Form PC-4C.

Based upon the maximum predicted annual impact at the MEI receptor (micrograms per cubic meter) and the modeled emission rate (grams per second), a dilution factor with the units (micrograms per cubic meter)/(grams per second) was calculated (see PC-4C).

By dividing the Reference Air Concentration (RAC) or the Risk Specific Dose (RSD) for the 10 regulated metals and the two chlorine compounds by

the dilution factor, a maximum allowable emission rate for each metal and chlorine compound was determined. These maximum allowable emission rates are summarized in Table 3.

EMISSION RATE CALCULATIONS

From the air quality modeling described in the preceding section, maximum allowable emission rates for the 10 regulated metals and the two chlorine compounds were determined. These emission rates represent contributions from both constituents of the hazardous waste derived (HWD) fuel used in the lightweight aggregate kilns and constituents in the feed materials to the lightweight aggregate kilns. Not all of the metals or chlorides introduced by either the HWD fuel or kiln feed material are discharged to the atmosphere. Factions of both the metals and chlorides are removed by the air pollution control equipment and factions of both are retained in the lightweight aggregate product.

Based on available test data, a partition factor was estimated for each of the 10 regulated metals and chlorides.

The data used for developing the partitioning/removal factors include eight sets of test data from Solite facilities collected during the period 1983-1991 and data from cement kilns published in December 1990. These tests are document in Appendix C. Based upon the nine reports reviewed, a "best engineering estimate" of partitioning/removal factor for each metal and chlorides from the HWD fuel to the controlled stack gas stream

was established.

In addition to establishing partitioning/removal factors, the test data were used to establish the fraction of total chromium in the stack gas that appeared as hexavalent chromium and the fractions of chlorides in the stack gas that appeared as hydrogen chloride and chlorine gas.

Based on the partitioning factors for metals, hydrogen chloride and chlorine gas in the kiln feed material and measured concentrations of metals and chlorides in the kiln feed material, estimates of the uncontrolled emissions of each metal, hydrogen chloride and chlorine attributable to the kiln feed material were made for each kiln to be certified.

By totalling the uncontrolled emissions of each metal, hydrogen chloride and chlorine from each kiln and applying the respective air pollution control removal efficiencies, an estimate of the total controlled emissions of each metal, hydrogen chloride and chlorine resulting from the kiln feed material was determined. By subtracting these partial emission rates from the total allowable emission rates calculated as described in the preceding section, a controlled emission rate for each metal, hydrogen chloride and chlorine attributable to HWD fuel was estimated.

By applying the inverse of the air pollution control equipment removal efficiencies and the inverse of the partitioning factors, the maximum feed rate of each metal and chlorides contributed by the HWD fuel was

calculated.

SUMMARY

HWD fuel use rates and characteristics, kiln feed rates and kiln production rates have been established for Solite kilns to assure pre-compliance with the Boiler and Industrial Furnace (BIF) regulations. The conditions of pre-compliance are based on air quality modeling conducted in accordance with EPA modeling guidelines and best engineering estimates of partitioning factors, air pollution control equipment removal efficiency and lightweight kiln operating conditions. Test data from several Solite facilities and from related facilities as well as experience with Solite lightweight aggregate kilns were used as a basis for the engineering judgments. Because of the conservatism incorporated into the air quality modeling, the estimates of partitioning factors and the estimates of air pollution control equipment removal efficiency, it is the opinion of Solite that the continuous operation of the kilns specified herein will not result in ambient concentrations of any of the 10 regulated metals, hydrogen chloride or chlorine that exceed the respective RACs or RSDs.

The pre-compliance operating conditions for the Solite facility, based upon the analysis presented herein, are summarized in Table 1. Table 3 summarizes the measured concentrations of metals and chlorides in the kiln feed material, the calculated maximum acceptable concentrations of metals and chlorides in the fuel, and the maximum allowable emission rates of

metals, hydrogen chloride and chlorine from each kiln pre-certified to operate with hazardous waste derived fuel.

FIGURE 1
STEPS FOR DEMONSTRATING
PRE-COMPLIANCE CERTIFICATION

FLORIDA SOLITE COMPANY
GREEN COVE SPRINGS, FLORIDA

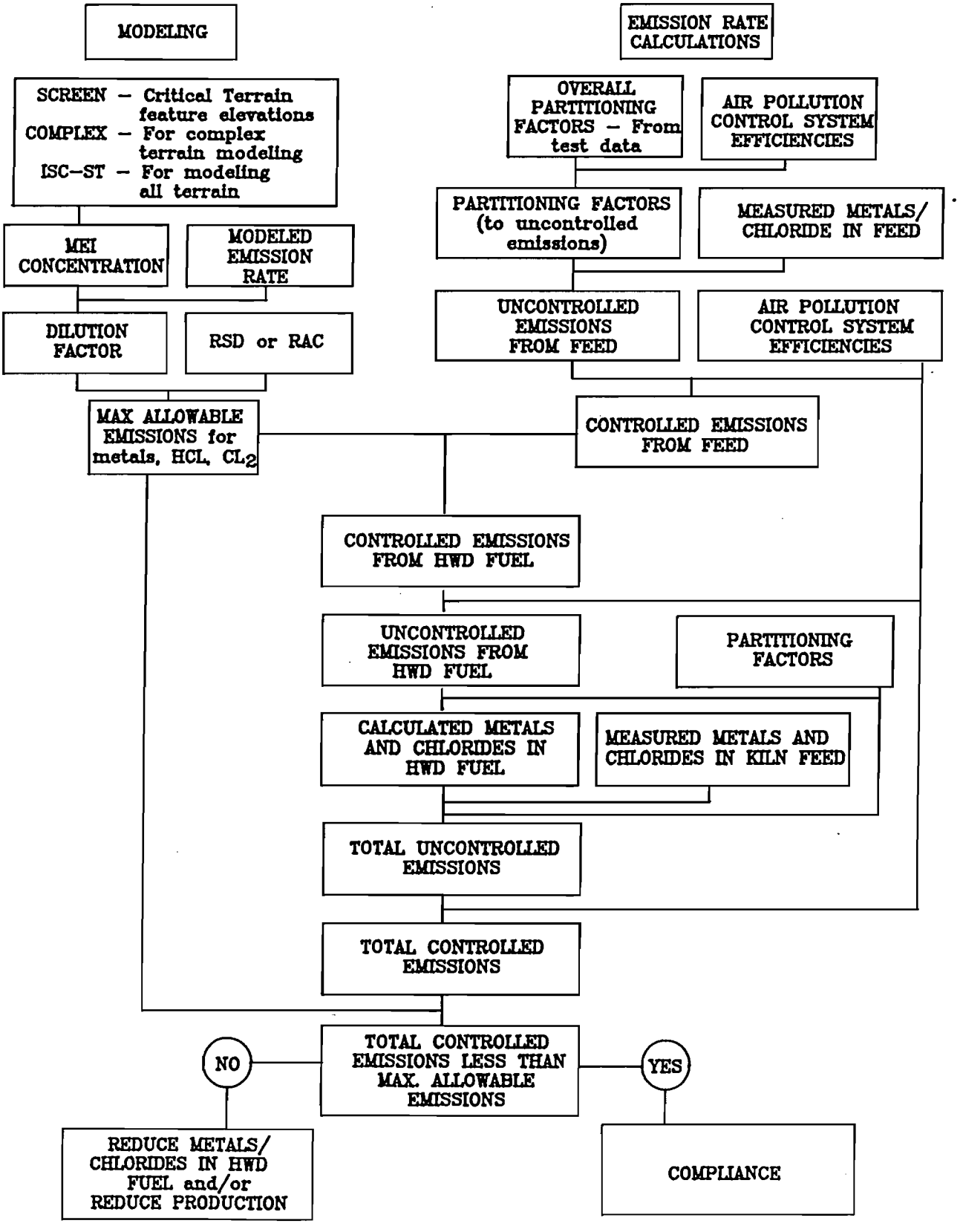

PRECOMPLIANCE CERTIFICATION FORM 4 (PC-4C)

REFERENCE INFORMATION FOR DISPERSION MODELING FOR COMPLIANCE WITH THE TIER III OR ADJUSTED TIER I METALS, HCl, AND Cl_2 STANDARDS.

PROPOSED PRE-COMPLIANCE CERTIFICATION	Incinerator Stacks				
	1	2	3	4	5
A. Stack Parameters	KILN 1 (1)	KILN 1A (1)	KILN 5 (1)		
Stack Height (meters)	19.8	19.8	19.8		
Exhaust Temperature (°K)	488	488	488		
Inner Stack Diameter (meters)	1.52	1.52	1.52		
Exit Velocity (m/sec)	20.4	20.4	20.4		
Flow Rate (cubic m/sec)	38	38	38		
Latitude	30:04:11	30:04:11	30:04:11		
Longitude	81:45:11	81:45:11	81:45:11		
GEP Stack Height (meters)	65	65	65		

B. Dispersion Modeling

Screening procedure or dispersion model/version used: ISC-ST Version 90346

Source and date of meteorological data (e.g., NWS station name, years): Jacksonville 1984-1988

Terrain type: Complex _____ or Noncomplex X

Land Use: Urban _____ or Rural X

Maximum annual average (i.e., MEI) dilution factor (ug/m³ per g/sec): ~ 1.09/10 = 0.109 (2)

C. Attach a USGS topographic map (or equivalent) showing facility location, surrounding land within 5 km of facility, and indicate MEI location with an "X."

(1) Pre-certification with only one kiln fired on HWD fuel at a time. Parameters listed are proposed.

(2) Maximum impact from a single kiln operation.

* MET 86 JAX - MAI

TABLE 1

PRE-COMPLIANCE CERTIFICATION OPERATING CONDITIONS(1)

FLORIDA SOLITE COMPANY
GREEN COVE SPRINGS, FLORIDA

Kiln	Production Rate(2) (tph)	HWD Fuel Use Rate (gal/hr)	HWD Fuel Use Rate (lb/hr)
1	7	315	2520
1A	7	476	3808
5	11	545	4360

(1) Annual operating time of 8760 hours is assumed.

(2) Only one kiln (No. 1, No. 1A and No. 5) will operate at a time on HWD fuel.

TABLE 2

PARTITIONING FACTORS AND
AIR POLLUTION CONTROL EFFICIENCIES

FLORIDA SOLITE COMPANY
GREEN COVE SPRINGS, FLORIDA

Constituent	Partitioning Factor (%)		Estimated Baghouse Efficiency
	Raw Feed to Uncontrolled Emissions(1)	Fuel to Uncontrolled Emissions(2)	
Particulate Matter	NA	NA	98.5
Antimony	6	50	97.5
Barium	15	40	97.5
Lead	35	55	97.5
Mercury	17	65	50.0
Silver	6	10	75.0
Thallium	6	15	90.0
Arsenic	15	75	97.5
Beryllium	4	30	95.0
Cadmium	7	80	97.5
Chromium(3)			
Total	6.0	36	97.5
Cr^{+6}	0.3	1.8	97.5
Chlorides(4)			
to HCl	82.5	82.5	20.0
to Cl_2	2.5	2.5	20.0

(1) Fraction of constituent in feed appearing as uncontrolled emissions.

(2) Fraction of constituent in fuel appearing as uncontrolled emissions.

(3) Fraction of Cr^{+6} in total chromium estimated to be 5.0%.

(4) Fraction of Cl_2 in total chlorides estimated to be 3.0%.

TABLE 3

SUMMARY OF ACCEPTABLE HWD FUEL
CHARACTERISTICS FOR PRE-COMPLIANCE CERTIFICATION

FLORIDA SOLITE COMPANY
GREEN COVE SPRINGS, FLORIDA

Constituent	Concentration in Kiln Feed Material (mg/kg)	Max Acceptable Conc in HWD Fuel (mg/kg) Kiln 5	Max Allowable Emission Rate (lb/hr) Kiln 5
Particulate Matter	NA	NA	11.8
Antimony	10.0	400,818	(2)
Barium	40.0	>1,000,000	(2)
Lead	35.0	109,196	6.6
Mercury	10.0	4,097	5.8
Silver	2.0	>1,000,000	(2)
Thallium	10.0	556,680	(2)
Arsenic	12.5	1,000	0.08
Beryllium	3.0	1,000	0.07
Cadmium	2.0	1,000	0.09
Chromium (Total)(3)	65.0	2,300	0.005
Chlorides	10.0	177,078	29.1

(1) 0.08 grains/dscf of stack gas corrected to 7% oxygen.

(2) Allowable emission rate exceeds allowable particulate matter emission rate; therefore, compliance with the particulate matter emission rates assures compliance with these metals limits. No fuel analyses required for these metals.

(3) Hexavalent chromium (Cr^{+6}) estimated to be 5.0% of total chromium.

(4) Chlorine gas estimated to be 3.0% of total chlorides.

ATTACHMENT 11

TEST PROTOCOL FOR DETERMINING
SULFUR BALANCE

KOOGLER & ASSOCIATES

TEST PROTOCOL FOR DETERMINING SULFUR BALANCE

FLORIDA SOLITE COMPANY
GREEN COVE SPRINGS, FLORIDA

INTRODUCTION

It is proposed that Florida Solite will provide FDER with the necessary reasonable assurance of complying with the permitted sulfur dioxide emission limitations by submitting a report on the study of the sulfur mass balance for each kiln.

OBJECTIVE

The objective of the study of the overall sulfur balance for each kiln would be to demonstrate that the analysis of the sulfur content of the raw clay mined in the quarry would be adequate, when combined with the sulfur content of fuels and the feed rates of clay and fuels, to provide FDER with reasonable assurance that the permitted sulfur dioxide limit for a given kiln will not be exceeded.

PROPOSED STUDY

The sulfur dioxide emissions from a kiln result from the combustion of sulfur in fuels and the processing of clay containing sulfur. The sulfur content of the coal, No. 2 fuel oil, propane and LBM can be readily determined from each shipment of fuel received by using the following fuel analysis methods.

Coal: ASTM 2492

No. 2 fuel oil: ASTM 2492

LBM: ASTM 2492

It is proposed that the sulfur content of the raw clay be determined by the method presented below.

Florida Solite will analyze clay samples taken from the face of the wall of the quarry being mined in order to geographically define the sulfur content of the clay at the mine. Individual samples will be taken every 10 feet and composited over 50 foot intervals along the clay face. The composite samples will be obtained and analyzed using a ASTM-D4239 (Sulfur in Samples of Coal and Coke using High-Temperature Tube Furnace) prior to the commencement of mining operations in the sampled area. The clay mined from the sampled area will be tracked and identified within the clay storage area.

The time and rate of the clay fed into the kiln will be logged. The fuel type and firing rate to the kiln will be monitored and recorded. A calibrated and certified continuous emission monitor will be installed for a temporary period (duration of this study) to monitor and record the sulfur dioxide emissions from the kiln. The recorded CEM data will be identified by the same tracking system used for logging the fuel and clay feed to the kiln.

The performance of the lime injection system (in controlling sulfur dioxide emissions) will also be evaluated as part of this study. The lime injection rate will be stepped up from zero pounds per hour to the optimum level of the system. The lime injection rate will be recorded for the performance analysis.

A single sample of lightweight aggregate produced by the kiln will be obtained and analyzed using a ASTM-D4239 method during the course of the study to verify the absence of sulfur in the product.

RESULTS

The sulfur balance study will be conducted for a period of 45 days excluding start up, shutdown and upset conditions. This time period will allow the compilation of a number of 30-day rolling averages for the sulfur dioxide emissions to compare with the permitted emission limits. A report on the findings of the study will be submitted to FDER within 45 days of the completion of the testing.

It is expected that the above study will provide FDER with reasonable assurance that the existing Kilns 1, 1A and 5 will be able to operate in full compliance with the permitted sulfur dioxide emission limits and that compliance can reasonably be demonstrated by use of a sulfur balance rather than by continuously monitoring sulfur dioxide emissions from the kiln.