State

PROGRESS ENERGY
SUB-BITUMINOUS BLEND TRIAL TEST REPORT
CRYSTAL RIVER UNIT 5

RECEIVED
JUL 21 2006
BUREAU OF AIR REGULATION

Submitted to:

Mr. Jeff Koerner
FDEP
North Permitting Section
Division of Air Resource Management
2600 Blair Stone Road MS 5500

Submitted by:

Progress Energy Corporation
Environmental Services Section
100 Central Avenue CX1B
St Petersburg, Fl. 33701

Distribution:

2 Copies	Department of Environmental Protection
2 Copies	Progress Energy Florida
1 Copy	Golder Associates Inc.

July 2006

Table of Contents

Appendix

1. Actual schedule and overall description of the trial burn

Actual Schedule

- 04/19/06 – Baseline CO testing on Unit 5 by CEMS Solutions
- 05/21/06 – Start Sub-bituminous blend burn at Crystal River Unit 5
- 05/22/06 – Sub-bituminous blend burn Particulate, CO, Resistivity, ESP Performance and Coal testing on Unit 5
- 05/23/06 - Sub-bituminous blend burn Ash Resistivity
- 05/23/06 – Completion of Sub-bituminous blend test burn – Unit 5
- 06/05/06 – Baseline CO, Resistivity and Coal testing on unit 5 by Koogler & Associates
- 06/06/06 – Baseline Ash Resistivity
- 07/08/06 – Baseline ESP Performance

Overall description of the trial burn

In an effort to continue expanding fuel diversity and ultimately enhancing market options through supplier flexibility at the Crystal River facility, a test burn of a blended bituminous product and a sub-bituminous product was conducted on Crystal River Unit 5 (referenced as CR5). This test burn was conducted following approval of a modified air permit by the Florida Department of Environmental Protection (FDEP) allowing testing of a sub-bituminous blended product.

The test consisted of one barge (15,900 tons) of the preblended product made up of 18% sub-bituminous coal & 82% bituminous coal. The barge arrived on site Saturday 5/20/06 and was burned Sunday 5/21/06 – Tuesday 5/23/06 on Unit 5. The sub-bituminous blend was coaled up directly to the unit from the barge without going to the ground allowing for better control and monitoring of the blended product. CR4 was coaled-up separately from the stockpile to prevent any opportunity for co-mingling of the sub-bituminous blend with the standard coal in CR4.

Blending of the coal product was conducted at the International Marine Terminal (IMT) in New Orleans prior to delivery.

There were no substantial issues raised during this trial. Full load was achieved and LOI (loss on ignition) was as good as or better than the base line coal performance measurements. Major emissions constituents, such as NOx, SO2, and opacity, were equivalent to or better than the same constituents utilizing the base line coal.

In addition to the major emissions constituents discussed above, detailed stack testing of CO, PM and ash resistivity testing were required to meet the Florida Department of Environmental Protection (FDEP) requirements. Particulate Matter was basically unaffected by the PRB blend as compared to baseline. CO, which is not currently regulated, was reportedly low during the baseline tests. CO readings did register while burning the PRB blend.

2. Summary of sub-bituminous blends evaluated (amounts delivered; blend ratio; and proximate/ultimate analyses)

- Amount Delivered - 15,900 Tons in one single continuous burn in Unit 5 from 5/21/6 to 5/23/6
- Blend Ratio - 18 % Sub-bituminous and 82 % Bituminous
- Proximate/ultimate analysis (See Appendix)

3. Discussion of operational issues of the sub-bituminous coal blend including: coal unloading, handling, storage and firing; fugitive dust; soot blowing; ESP performance and adjustments; and ash handling and storage;

Discussion of Operational Issues:

- **Coal Unloading**: The blend was observed unloading from barge and along conveyors. The large percentage of bituminous coal (82%) did an excellent job of controlling dust and in fact, little if any dusting at all was noticed.
- **Handling**: No problems were encountered with coal handling. Performed similar to current Crystal River coal.
- **Storage and firing**: The sub-bituminous blend was taken directly from the barge to Unit 5 and not put to the ground, therefore unable to evaluate storage on-site. Firing was adequate to achieve full load in the unit.
- **Fugitive Dust**: Coal blend was not dusty and fugitive dusting was not an issue.
- **Sootblowing**: Routine sootblowing operations were continued during trial. A small ash accumulation was observed in an area where sootblowers were non-operational. Accumulation was removed with air lance and did not reform during trial. Therefore, the accumulation may have been formed prior to the sub-bituminous blend.
- **ESP Performance and Adjustments**: No problems with ESP performance or opacity during the sub-bituminous blend burn.
- **Ash handling and storage**: Ash quality and LOI were well within acceptable limits to be able to utilitize ash product. In fact, LOI was better than normal at 3.4 - 4%.

4. Comparison of baseline operations versus operation with the sub-bituminous coal blend

Baseline Compared to PRB Blend burn:

Crystal River 5 PRB Blend Trial & Baseline					
Test Type Start Time End Time Ran By		Stack Test - Baseline 06/05/2006 10:00:00 06/05/2006 14:00:00	PRB Blend Test 05/22/2006 07:30:00 05/22/2006 19:30:00		
Measured Test Data (Average)				Delta	% change
Gross Load	*MW*	711.29	711.31	0.02	0.00%
Auxiliary Load	*MW*	32.01	32.10	0.10	0.30%
Net Load	*MW*	679.29	679.21	-0.08	-0.01%
Main Steam Temp	*DEGF*	1003.33	1003.31	-0.02	0.00%
Main Steam Press	*PSI*	2392.81	2404.18	11.37	0.48%
Hot Reheat Temp	*DEGF*	998.77	998.20	-0.56	-0.06%
Main Steam Flow	*KPPH*	4899.27	4882.48	-16.79	-0.34%
U5 COAL FDRS TOTAL COAL FLOW	*KLB/HR*	534.48	540.02	5.55	1.04%
Heat Input Rate	*MMBTU/HR*	6257.43	6197.09	-60.34	-0.96%
CEMS data & LOI					
Opacity	*%*	5.40	5.39	-0.02	-0.33%
NOx	*LB/MBTU*	0.50	0.44	-0.05	-10.69%
SO2	*LB/MBTU*	1.06	1.05	-0.02	-1.69%
LOI (from PMI) - below 6% is good	*%*	5.30	3.40	-1.90	-35.85%

5. Evaluation of current equipment compatibility with the sub-bituminous coal blend

Evaluation of Current Equipment Compatibility with the Sub-bituminous Blend:

There were no shortcomings in existing equipment during the sub-bituminous blend use. U5 was able to make full load without issues. More long term use of the product, or a similar product, would likely require some expenditures to complete repairs to existing equipment and provide additional safety measures needed for long-term use of a higher volatility product.

6. Summary of continuous emissions monitoring data

Crystal River 5 PRB Blend Trial & Baseline					
Test Type		Stack Test - Baseline	PRB Blend Test		
Start Time		06/05/2006 10:00:00	05/22/2006 07:30:00		
End Time		06/05/2006 14:00:00	05/22/2006 19:30:00		
Ran By					
Measured Test Data (Average)				**Delta**	**% change**
Gross Load	*MW*	711.29	711.31	0.02	0.00%
Auxiliary Load	*MW*	32.01	32.10	0.10	0.30%
Net Load	*MW*	679.29	679.21	-0.08	-0.01%
Main Steam Temp	*DEGF*	1003.33	1003.31	-0.02	0.00%
Main Steam Press	*PSI*	2392.81	2404.18	11.37	0.48%
Hot Reheat Temp	*DEGF*	998.77	998.20	-0.56	-0.06%
Main Steam Flow	*KPPH*	4899.27	4882.48	-16.79	-0.34%
U5 COAL FDRS TOTAL COAL FLOW	*KLB/HR*	534.48	540.02	5.55	1.04%
Heat Input Rate	*MMBTU/HR*	6257.43	6197.09	-60.34	-0.96%
CEMS data & LOI					
Opacity	*%*	5.40	5.39	-0.02	-0.33%
NOx	*LB/MBTU*	0.50	0.44	-0.05	-10.69%
SO2	*LB/MBTU*	1.06	1.05	-0.02	-1.69%
LOI (from PMI) - below 6% is good	*%*	5.30	3.40	-1.90	-35.85%

The continuous emission monitors recorded Opacity, NOx, and SO2 emissions. Referencing the above table:

- Opacity – During the baseline testing the opacity readings averaged 5.40. The sub-bituminous blend test value averaged 5.39. The percent change is an improvement of 0.33 percent with the blended coal.

- NOx - During the baseline testing the NOx readings averaged 0.50. The sub-bituminous blend test value averaged 0.44. The percent change is an improvement of 10.7 percent with the blended coal.

- SO2 - During the baseline testing the SO2 readings averaged 1.06. The sub-bituminous blend test value averaged 1.05. The percent change is an improvement of 1.7 percent with the blended coal.

7. Summary of boiler operating data

Furnace Exit Gas Temperature (FEGT)

FEGT's were taken before and during the sub-bituminous blend trial at full load on 11th floor of CR5. The table below summarizes the main results of FEGT tests. Note that the Ash Fusion Softening Temperture (AFT) of the sub-bituminous coal blend used in the trial was 2170-2200 degrees F (from lab analyses) and ash fusion cannot be blended away. (Also, red O_2% indicates a reducing atmosphere present.)

CR Unit 5
Benchmark HVT Data West Face of Boiler
4/19/2006 11th Floor, Elev 224 **Note: CO at 1000 ppm indicates offscale high**

Insertion	North Port, Near Wall			Center Port, Middle			South Port, Near Wall		
Length, ft	O2, %	CO, ppm	Temp, F	O2, %	CO, ppm	Temp, F	O2, %	CO, ppm	Temp, F
2	1.55	608	**1678**	1.0	1000+	**2416**	4.40	530	**1874**
4	2.00	610	**1742**				3.20	410	**2018**
6	1.85	634	**1858**				1.20	20	**2109**
8	1.30	702	**1909**				0.00	1000	**2175**
10	1.00	739	**1945**				0.00	1000	**2190**
12	1.10	720	**2119**				0.00	1000	**2287**
14							0.00	1000	
16							0.00	1000	**2300**

CR Unit 5
PRB Blend HVT Data West Face of Boiler
5/23/2006 11th Floor, Elev 224

Insertion	North Port, Near Wall			Center Port, Middle			South Port, Near Wall		
Length, ft	O2, %	CO, ppm	Temp, F	O2, %	CO, ppm	Temp, F	O2, %	CO, ppm	Temp, F
2	1.90	392	**1660**	2.1	527	**2245**	0.00	1000	**1960**
4	1.90	400	**1775**	1.7	565	**2240**	0.00	1000	**2120**
6	1.20	340	**1855**	1.8	575	**2320**	0.00	1000	**2195**
8	0.90	425	**1960**				0.00	1000	**2245**
10	0.45	500	**2065**				0.10	1000	**2295**
12	0.40	770	**2145**						
14	1.00	865	**2165**						
16									

Comparing the above tables, the temperatures appear to be about the same between the two tests, with the exception of the center readings, which dropped about 200 degrees F from the baseline to the sub-bituminous blend. This could be due to the high moisture content of PRB (28% moisture). It also appears that CO levels were in the same ballpark, if not slightly lower, with the sub-bituminous blend.

8. Summary of emissions test results, actual test schedule, and procedures used Actual Schedule

- 04/19/06 – Baseline CO testing on Unit _ by CEMS Solutions
- 05/22/06 – Sub-bituminous blend burn - Particulate, CO, Ash Resistivity, ESP Performance and Coal testing on Unit 5
- 05/23/06 – Sub-bituminous blend burn - Ash Resistivity
- 06/05/06 – Baseline CO, Ash Resistivity and Coal testing on unit 5 by Koogler & Associates
- 06/06/06 – Baseline Ash Resistivity
- 07/08/06 – Baseline ESP Performance

Summary of emissions test results

CO & PM

CO & PM measurements were taken by Koogler & Associates both during the sub-bituminous blend and later on typical plant bituminous coal (baseline). Koogler performed (6) 1-hour tests on the sub-bituminous blend day (5/22) and (3) 1-hour tests on the baseline coal (6/5). CEMS Solutions performed (9) 20 minute CO tests on the baseline coal (4/19). Results are indicated below:

CR5 Stack Testing Results Summary (lb/mmbtu)					
	Baseline Tests			Blend Tests	
	4/19	6/5	6/5	5/22	5/22
Test Run #	CO	CO	PM	CO	PM
1	0.007	*<.001**	0.003	0.031	0.004
2	0.005	*<.001*	0.004	0.058	0.004
3	0.006	*<.001*	0.004	0.033	0.004
4	0.006			0.03	0.003
5	0.006			0.024	0.003
6	0.004			0.019	0.002
7	0.004				
8	0.004				
9	0.006				
Avg	0.006	*<.001*	0.004	0.033	0.003
Min	0.004		0.003	0.019	0.002
Max	0.007		0.004	0.058	0.004

** non-detectable (< 1ppm)*

Particulate Matter was basically unaffected by the sub-bituminous blend as compared to baseline. CO, which is not currently regulated, was reportedly low during the baseline tests. CO readings did register while burning the sub-bituminous blend. However, in comparing the CO levels of the two coals in the HVT tests (Section 7), the two coals seem very similar in CO levels. This leads us to question how the CO levels could be similar within the boiler yet differ at the stack.

ESP Voltages/Performance

We monitored ESP secondary voltage and secondary current and the total ESP secondary power input. The statistical results are summarized below:

	Baseline Run - 7/8/06 (710 MW)			PRB Blend - 5/22/06 (710 MW)		
ESP T/R Set	Baseline Secondary Current (mA)	Baseline Secondary Voltage (kV)	Baseline Secondary Power Input (KW)	PRB Blend - Secondary Current (mA)	PRB Blend Secondary Voltage (kV)	PRB Blend Secondary Power Input (KW)
Descriptive Statistics						
Mean	412.66	50.05	19.73	318.57	50.124	15.2
Median	387.00	50.00	18.90	272.0	50.0	11.5
Mode	474.00	50.00	9.90	162.0	50.0	8.8
Standard Deviation	181.74	2.33	8.98	177.32	1.85	8.73
Range	753	14.00	36.90	653	11	34
Minimum	94.0	41.1	3.5	86.0	44.3	4.0
Maximum	847.0	55.1	40.4	739.0	55.0	37.9
Count	77	77	77	79	79	79

Ash Resistivity

Fly ash samples were pulled from ESP hoppers on CR5 at full load. Two samples were taken during the sub-bituminous blend burn and two more taken during normal coal burning operations. Samples were sent to APCO Services laboratories in Hopkinsville, KY. All (4) samples were tested simultaneously in a declining temperature batch resistivity test at 4.7% moisture to simulate conditions at the ESP inlet.

5/22/06	**PRB blend**	710
5/23/06	**PRB blend**	760
6/5/06	Typical CAPP	710
6/6/06	Typical CAPP	760

Fig. 1 is APCO's resistivity curve results. Typical ESP inlet temperature is 300 degrees F.

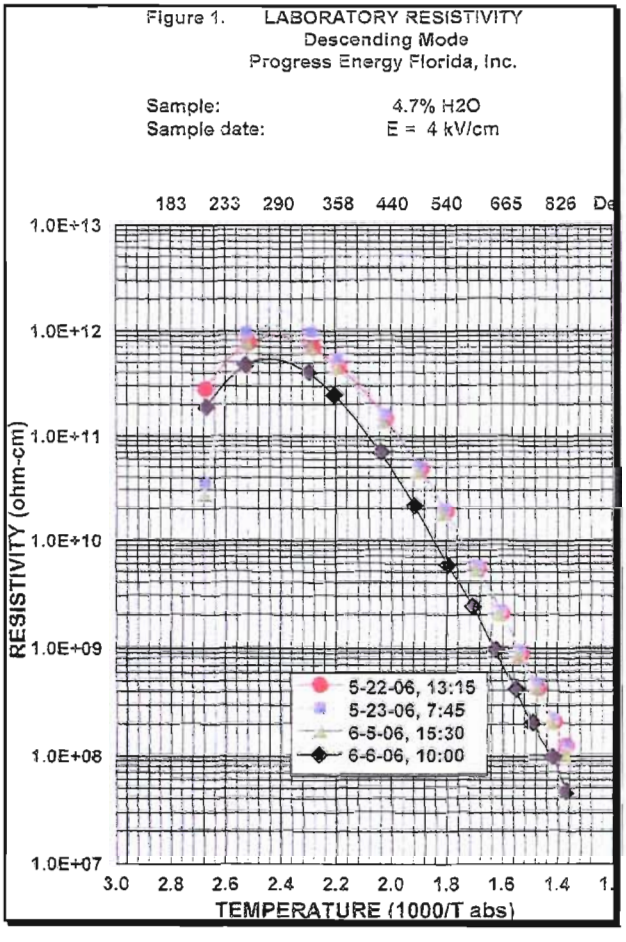

Upon evaluating APCO Services' Fig. 1, it appears that the sub-bituminous blend had, for the most part, slightly higher resistivity, yet still in the manageable range of the Electrostatic Precipitator. If we consider that the normal full load ESP inlet temperature is 300°F, the 5/22/06 sub-bituminous blend resistivity was actually lower than the 6/5/06 typical bituminous coal. Conclusion: the sub-bituminous blend ash resistivity is within normal parameters.

Test Procedures

Test Parameter	Test Method
PM	EPA Method 17
Stack Gas Velocity	EPA Method 2
Stack Moisture	EPA Method 4
Dry Molecular Weight	EPA Method 3
Carbon Monoxide	EPA Method 10
Opacity	EPA Method 9
Ash Resistivity Measurements	IEEE Standard 58-1984
Proximate Analysis	ASTM D-3172
Ultimate Analysis	ASTM D-3176
Heating Value	ASTM D-5865
Sulfur Percent	ASTM D-4239

9. Comparison of baseline emissions with emissions from firing the sub-bituminous coal blend (short-term and long-term)

NOx – Baseline testing of NOx emissions was conducted on June 05, 2006. The blend testing was conducted on May 22, 2006. The results of the testing are as follows:

NOx Test Results

Run Number	Baseline Rate (lb/mmbtu)	Blend Rate (lb/mmbtu)
1	0.501	.443
2	0.504	.436
3	0.502	.455
4	0.513	.455
5	0.512	.447
6		.439
7		.446
8		.453
9		.456
10		.457
11		.456
12		.452
13		.485
Average	.506	.452

SO2 - Baseline testing of SO2 emissions was conducted on June 05, 2006. The blend testing was conducted on May 22, 2006. The results of the testing are as follows:

Run Number	Baseline Rate (lb/mmbtu)	Blend Rate (lb/mmbtu)
1	1.071	1.056
2	1.077	1.061
3	1.077	1.064
4	1.082	1.056
5	1.072	1.063
6		1.059
7		1.063
8		1.068
9		1.07
10		1.059
11		1.037
12		1.021
13		1.016
Average	1.076	1.053

PM - Baseline testing of PM emissions was conducted on June 05, 2006. The blend testing was conducted on May 22, 2006. The results of the testing are as follows:

Run Number	Baseline Rate (lb/mmbtu)	Blend Rate (lb/mmbtu)
1	.003	.004
2	.004	.004
3	.004	.004
4		.003
5		.003
6		.002
Average	.004	.003

CO - Baseline testing of CO emissions was conducted on April 19, 2006 and June 05, 2006. The blend testing was conducted on May 22, 2006. The results of the testing are as follows:

	Baseline Rate (lb/mmbtu)	Baseline Rate (lb/mmbtu)	Blend Rate (lb/mmbtu)
Run Number	4/19/2006	6/5/2006	5/22/2006
1	.007	<.001	.031
2	.005	<.001	.058
3	.006	<.001	.033
4	.006		.03
5	.006		.024
6	.004		.019
7	.004		
8	.004		
9	.006		
Average	.006	<.001	.033

10. Discussion of emissions changes as described in Appendix C of 40 CFR 60.

The measured emissions outlined in section 9 were evaluated using the statistical methodology found in 40 CFR 60 Appendix C. The methodology used is the student's t test. Please see the results in Appendix 4.

NOx, SOx, and PM all showed that the emission rate change was insignificant. The only pollutant measured that showed a significant rate increase was CO. The CO significant rate increase determination, however, is based on a relatively small number of tests – with only a single set of tests with the sub-bituminous blend.

Appendix

Proximate and ultimate analyses

SGS

PRB BLEND

IMT ANALYSIS

May 25, 2006

Progress Energy Corporation
PEB 10
P. O. Box 1551
Raleigh NC 27602
Attn: Debra Haynes

Sample identification by
CLIENT

CALCULATED COMPOSITE ON A WEIGHTED BASIS
GULF BARGE: MICKIE BIRDSALL
NOT TONS : 15567.98
COMMODITY : D/PRB BLEND
SAMPLING : MECHANICAL

Kind of sample reported to us COAL

Sample taken at INTERNATIONAL MARINE TERMINALS

Sample taken by SGS/MINERALS SERVICES DIVISION

Date sampled May 17-18, 2006

Date received May 18, 2006

Analysis Report No. 89-6312-60C

PROXIMATE ANALYSIS

	As Received	Dry Basis
% Moisture	10.16	xxxxx
% Ash	10.96	12.20
% Volatile	29.74	33.10
% Fixed Carbon	49.14	54.70
	100.00	100.00
Btu/lb	11771	13102
% Sulfur	0.66	0.73
MAF Btu		14923

ULTIMATE ANALYSIS

	As Received	Dry Basis
% Moisture	10.16	xxxxx
% Carbon	66.45	73.96
% Hydrogen	3.99	4.44
% Nitrogen	1.12	1.25
% Sulfur	0.66	0.73
% Ash	10.96	12.20
% Oxygen(diff)	6.66	7.42
	100.00	100.00

Respectfully submitted,
SGS NORTH AMERICA INC.

St. Rose Laboratory

PRB blend sam 'es

S.L. Sampler # 4 MAY 2006

Date	Lab #	Mech Hand	# Samp	I.D. Shift	#/1000 Tons	Tonnage	Moisture	Ash	Volatile Matter	Fixed Carbon	Sulfur	BTU/LB	Lbs SO2 /MBTU	MAF BTU
									As Bunkered Samples					
Sun 05/21/06														
UNIT 5	64176	M	42	0600-1600	17.6	2,385	9.33	12.13	30.53	48.01	0.64	11718	1.09	14920
UNIT5	64178	M	54	16:00-24:00	17.9	3,025	10.32	11.27	31.68	46.73	0.65	11774	1.10	15016
Mon 05/22/06														
UNIT#5	64185	M	26	00:01-08:00	17.9	1,456	10.46	9.69	31.34	48.51	0.69	11964	1.15	14983
UNIT#5	64187	M	36	08:00-16:00	50.1	718	9.30	10.69	31.21	48.80	0.65	11945	1.09	14929
UNIT#5	64189	M	35	16:00-24:00	21.2	1,650	9.37	10.96	33.40	46.27	0.67	11887	1.13	14920
Tues 05/23/06														
UNIT#5	64196	M	42	00:01-08:00	18.5	2,269	9.98	11.12	31.39	47.51	0.69	11752	1.17	14895
UNIT#5	64198	M	36	08:00-16:00	18.3	1,967	8.87	10.02	33.52	47.59	0.70	12073	1.16	14885
UNIT5	64200	M	6	16:00-18:00	17.2	349	9.50	11.50	33.39	45.61	0.68	11694	1.16	14803
NO TEST	64201	M	103	18:00-24:00	23.3	4,424	11.52	7.24	34.83	46.41	0.57	11570	0.99	14242

PROXIMATE RESULTS FROM
DAILY PRB BURN
SAMPLERS

(proximate)

STANDARD LABORATORIES, INC.
PO BOX 606
WHITESBURG, KY 41858
TEL: 606-633-9373
FAX: 606-633-8136

Lab No. 60530195

Date Rec'd 05/30/06

Date Sampled ~~05/23/06~~ - TUES

Sampled By YOURSELVES

SL-CRYSTAL RIVER (#23)
ATTN: MIKE EBERHARDT
P.O. BOX 2883
CRYSTAL RIVER, FL 34423

Sample ID: ~~0001-600M~~
4 - ~~UNIT 5~~
2269 TONS
LAB #~~54196~~

ULTIMATE ANALYSES FOR PRB/CSPP BLEND

Taken from Plant Samplers.

ULTIMATE ANALYSIS OF COAL	AS REC'D	% DRY BASIS
ASH:	11.12	12.35
HYDROGEN:	4.66	5.18
CARBON:	67.88	75.40
NITROGEN:	1.27	1.41
SULFUR:	0.69	0.77
OXYGEN:	4.40	4.89

Respectfully Submitted: _____
RICK CHAMPION / MANAGER
BILLY MULLINS / ASSISTANT MANAGER

BEST AVAILABLE COPY

STANDARD LABORATORIES, INC.

PO BOX 606
WHITESBURG, KY 41858
TEL: 606-633-9373
FAX: 606-633-6136

Lab No. 60530197

Date Rec'd 05/30/06

Date Sampled 05/27/06 - SUN

Sampled By YOURSELVES

SL-CRYSTAL RIVER (#23)
ATTN: MIKE EBERHARDT
P.O. BOX 2803
CRYSTAL RIVER, FL 34423

Sample ID: 1600-2400
4 - UNIT 6 ORIGIN MB
3025 TONS
LAB #64178

ULTIMATE ANALYSIS OF COAL	AS REC'D	% DRY BASIS
ASH:	11.27	12.57
HYDROGEN:	4.59	5.12
CARBON:	67.59	75.35
NITROGEN:	1.27	1.42
SULFUR:	0.66	0.73
OXYGEN:	4.31	4.81

Respectfully Submitted: _____
RICK CHAMPION / MANAGER
BILLY MULLINS / ASSISTANT MANAGER

FORM # 21

June 5-6 2006 Baseline Proximate Coal samples

Pulled from sampler #4 and analyzed by Standard Labs.

	S.L.	Sampler # 4				JUNE 2004					As Bunkered Samples									
			Mech	Type	#	I.D.	#/1000				Volatile	Fixed			Lbs SO2	MAF	Dry	Dry	Dry	Dry
	Date	Lab #	Hand	A/D	Samp	Shift	Tons	Tonnage	Moisture	Ash	Matter	Carbon	Sulfur	BTU/LB	/MBTU	BTU	Ash	Sul	Btu	Vol
4	**06/05/06**	**64324**	M	D	70	00:01-08:00	19.5	3,591	**9.47**	**9.08**	**33.88**	**47.57**	**0.67**	**12004**	**1.12**	14738	10.03	0.74	13260	37.42
4	**06/06/06**	**64335**	M	D	66	16:00-24:00	14.9	4,438	**6.27**	**9.98**	**33.53**	**50.22**	**0.69**	**12621**	**1.09**	15070	10.65	0.74	13465	35.77

JUNE 2006
BASELINE COAL
(PROXIMATE)

JUNE 2006
BASELINE COALS

STANDARD LABORATORIES, INC.
(ULTIMATE)

PO BOX 606
WHITESBURG, KY 41858
TELE: 606-633-9373
FAX: 606-633-8136

Lab No. 60612221

Date Rec'd 06/12/06

Date Sampled 06/06/06

Sampled By YOURSELVES

PROGRESS ENERGY
ATTN: JAY CHESSER
P.O. BOX 2883
CRYSTAL RIVER, FL 34423

Sample ID: 1600-2400 M - 4
D
TONS: 4438
LAB #64335

ULTIMATE ANALYSIS OF COAL	% AS RUN BASIS	% DRY BASIS
ASH:	9.98	10.65
HYDROGEN:	4.89	5.22
CARBON:	72.16	76.98
NITROGEN:	1.41	1.50
SULFUR:	0.69	0.74
OXYGEN:	4.60	4.91

Respectfully Submitted: Billy Mullins
RICK CHAMPION / MANAGER
BILLY MULLINS / ASSISTANT MANAGER

FORM # 21

STANDARD LABORATORIES, INC.

PO BOX 606
WHITESBURG, KY 41858
TELE: 606-633-9373
FAX: 606-633-8136

Lab No. 60612220

Date Rec'd 06/12/06

Date Sampled 06/05/06

Sampled By YOURSELVES

PROGRESS ENERGY
ATTN: JAY CHESSER
P.O. BOX 2883
CRYSTAL RIVER, FL 34423

Sample ID: 0001-0800 M - 4
D
TONS: 3591
LAB #64324

ULTIMATE ANALYSIS OF COAL	% AS RUN BASIS	% DRY BASIS
ASH:	9.08	10.03
HYDROGEN:	4.76	5.26
CARBON:	69.00	76.22
NITROGEN:	1.34	1.48
SULFUR:	0.67	0.74
OXYGEN:	5.68	6.27

Respectfully Submitted: Billy Mullins
RICK CHAMPION / MANAGER
BILLY MULLINS / ASSISTANT MANAGER

Baseline (6/5/06) and Blend (5/22/06) - Particulate and CO Test Report

PARTICULATE MATTER AND CARBON MONOXIDE EMISSIONS TEST REPORT

EU-003 FOSSIL FUEL STEAM GENERATOR (Unit 5)

Sub-bituminous/Bituminous Coal Blend Trial Burn

Florida Power Corporation
dba Progress Energy Florida, Inc.
Crystal River Plant

Permit Numbers: 0170004-009-AV and
0170004-012-AC

Test Date: May 22, 2006 and June 5, 2006
Report Date: June 29, 2006

Koogler & Associates, Inc.
4014 NW 13th Street
Gainesville, Florida 32609
352-377-58222

673-06-06

KOOGLER & ASSOCIATES, INC.
ENVIRONMENTAL SERVICES

PARTICULATE MATTER AND CARBON MONOXIDE EMISSIONS TEST REPORT

EU-003 FOSSIL FUEL STEAM GENERATOR (Unit 5)

Sub-bituminous/Bituminous Coal Blend Trial Burn

Florida Power Corporation
dba Progress Energy Florida, Inc.
Crystal River Plant

Permit Numbers: 0170004-009-AV and
0170004-012-AC

Test Date: May 22, 2006 and June 5, 2006
Report Date: June 29, 2006

Responsible Official Certification:

I certify that, based upon information and belief formed after reasonable inquiry, the statements and information in the attached documents are true, accurate and complete.

Bernie M. Cumbie, Manager, Crystal River Fossil Plant & Fuel Operations	Signature
Date: 7/6/06	

KOOGLER & ASSOCIATES, INC.
ENVIRONMENTAL SERVICES

PARTICULATE MATTER AND CARBON MONOXIDE EMISSIONS TEST REPORT

EU-003 FOSSIL FUEL STEAM GENERATOR (Unit 5)

Sub-bituminous/Bituminous Coal Blend Trial Burn

Florida Power Corporation
dba Progress Energy Florida, Inc.
Crystal River Plant

Permit Numbers: 0170004-009-AV and
0170004-012-AC

Test Date: May 22, 2006 and June 5, 2006
Report Date: June 29, 2006

Responsible Official Certification:

I certify that, based upon information and belief formed after reasonable inquiry, the statements and information in the attached documents are true, accurate and complete.

Bernie M. Cumbie, Manager, Crystal River Fossil Plant & Fuel Operations

Signature

Date:

KOOGLER & ASSOCIATES, INC.
ENVIRONMENTAL SERVICES

To the best of my knowledge, all applicable field and analytical procedures comply with the Florida Department of Environmental Protection requirements and all test data and plant operating data are true and correct.

John B. Koogler, Ph.D., P.E.

State of Florida
License No. 12925

06/29/06

Date

KOOGLER & ASSOCIATES, INC.
ENVIRONMENTAL SERVICES

TABLE OF CONTENTS

1.0 INTRODUCTION

Florida Power Corporation dba Progress Energy Florida, Inc. owns and operates an electrical power generation complex in Crystal River, Florida. The complex consists of four coal-fired fossil fuel steam generating (FFSG) units and one nuclear steam generating unit. The four fossil fuel power generation units are permitted under Title V Air Operation Permit Number 0170004-009-AV. Each of the four fossil fuel units has high efficiency electrostatic precipitators for particulate matter emission control.

On May 22, 2006, Koogler & Associates, Inc. of Gainesville, Florida conducted particulate matter (PM) and carbon monoxide (CO) emission measurements on the No. 5 FFSG unit (Emission Unit 003). Emission measurements for PM and CO were conducted to satisfy the requirements of Permit No. 0170004-012-AC that authorize Progress Energy to conduct a trial burn with a mixture of sub-bituminous coal and bituminous coal in Unit 4 and/or Unit 5.

The No. 5 FFSG unit is rated at 760 megawatt (MW) or 6,665 mmBTU per hour. The unit can burn bituminous coal; or a bituminous coal and bituminous coal briquette mixture. Distillate fuel oil may be burned as a startup fuel.

Additional emission measurements were conducted on the No. 5 FFSG for particulate matter and carbon monoxide on June 5, 2006. These measurements

were conducted under normal coal firing conditions. The PM measurements conducted during the June 5, 2006 test period were performed to meet the compliance assurance requirements of Permit No. 0170004-009-AV.

The CO and PM emission measurements conducted on June 5, 2006 are incorporated in this report to provide baseline Unit 5 emission data against which the trial burn test results can be compared.

Prior to testing, the Southwest District office of the Florida Department of Environmental Protection was notified of the test schedule.

Unit 5 is limited by permit to 0.1 pounds of particulate matter per million Btu (lb/mmBTU) heat input while operating normally. Koogler & Associates conducted six one-hour particulate matter emissions test runs and six one-hour carbon monoxide test runs on Unit 5 during the May 22, 2006 test period. During the June 5, 2006 annual compliance test, Koogler & Associates conducted three one-hour particulate matter runs and three one-hour carbon monoxide emission test runs on Unit 5.

Particulate matter emissions tests on Unit 5 during the May 22, 2006 bituminous coal and bituminous coal trial resulted in an average particulate matter emission rate of 0.003 lb/mmBTU at an average heat input rate of 6,455 mmBTU/hr (96.8

percent of permitted). Carbon monoxide emissions during the same test period averaged 0.032 lb/mmBTU (208.6 lb/hr).

Particulate matter emissions tests on Unit No. 5 during the June 5, 2006 test period while Unit 5 was fired with the coal normally fired to the unit resulted in an average particulate matter emission rate of 0.004 lb/mmBTU at an average heat input rate of 6,526 mmBTU/hr (97.9 percent of permitted). No carbon monoxide was detected (<1 ppm) during the CO test runs conducted during the June 5, 2006 test period.

2.0 SAMPLE PORT LOCATIONS

Four sample ports are located at 90 degrees to one another in the 308 inch diameter stack. The sample ports are located approximately 350 feet (13.6 duct diameters) downstream from any flow disturbing ductwork and 188 feet (7.3 duct diameters) below the top of the stack. The overall stack height is 600 feet from the ground level. Based on a four port traverse configuration, 12 points were selected for the EPA Methods 2, 3, 4 and 5 sample train traverses; three points through each of the four sample ports. A diagram of the stack and sample traverse points is presented in Figure 1.

Figure 1

Progress Energy
Crystal River Plant
Unit 4 and Unit 5

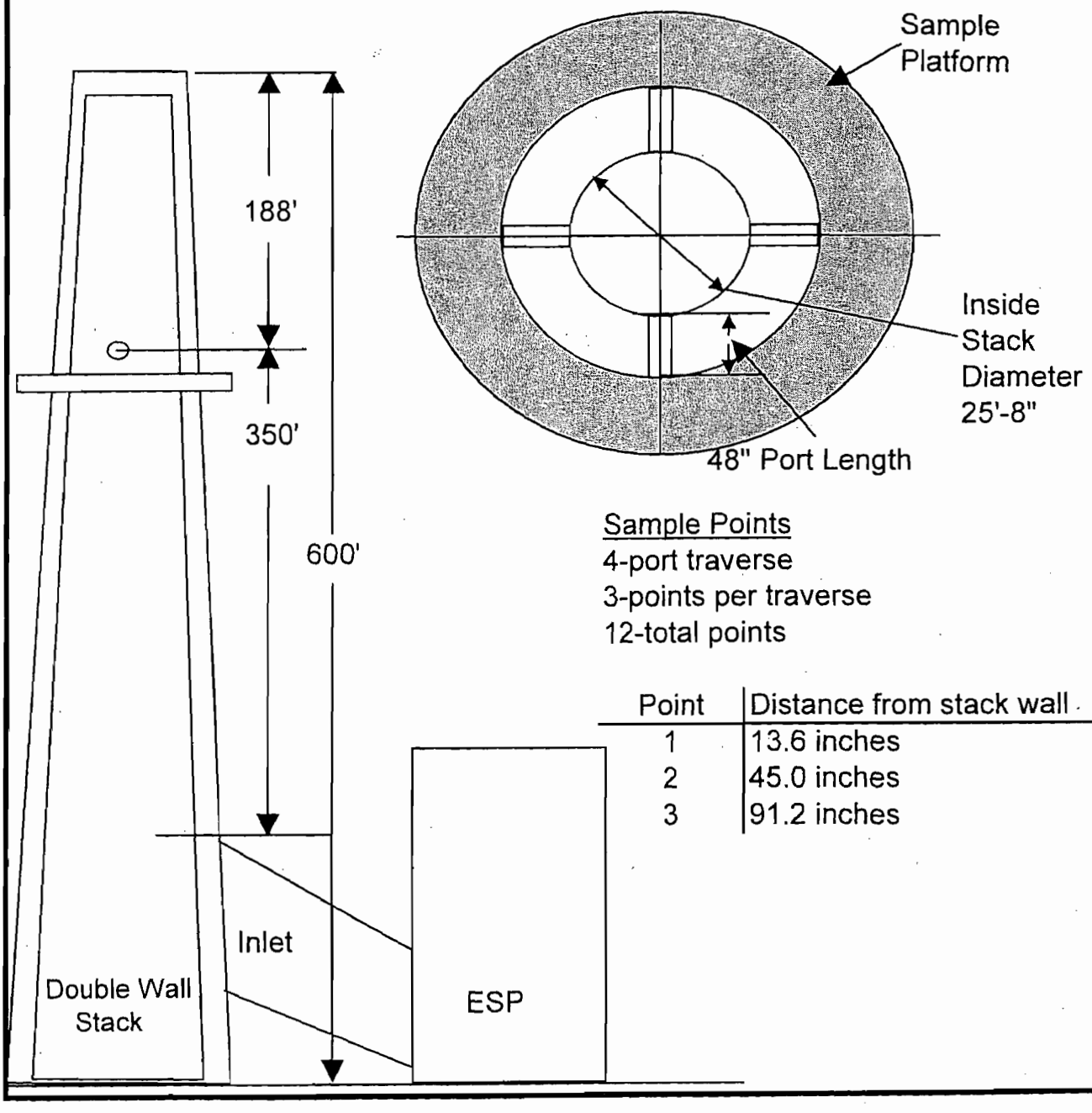

Sample Points
4-port traverse
3-points per traverse
12-total points

Point	Distance from stack wall
1	13.6 inches
2	45.0 inches
3	91.2 inches

3.0 FIELD AND ANALYTICAL PROCEDURES

Particulate matter emission measurements were made using EPA Method 17 as adopted by FDEP in Rule 62-297.401(17), F.A.C. The in-stack filter holder was constructed of stainless steel with a 47 mm diameter filter. The sampling point locations for the EPA Method 17 test were established in accordance with EPA Method 1. A schematic diagram of the sampling train used for the particulate matter emission measurements is shown in Figure 2.

Stack gas velocity measurements and stack gas moisture measurements were made in conjunction with the EPA Method 17 tests in accordance with EPA Methods 2 and 4. The dry molecular weight of the stack gas was determined in accordance with EPA Method 3. Carbon monoxide emission measurements were made using EPA Method 10 as adopted by FDEP in Rule 62-297.401(10), F.A.C. The carbon monoxide emission sample was drawn into a heated probe and filter, heated sample line and a moisture removal system upstream of the CO monitor. A schematic diagram of the carbon monoxide continuous emission monitor is shown in Figure 3.

Opacity observations were made in accordance with EPA Method 9.

All EPA test methods are described in 40 CFR 60, Appendix A and have been adopted by reference by Rule 62-297.401, F.A.C.

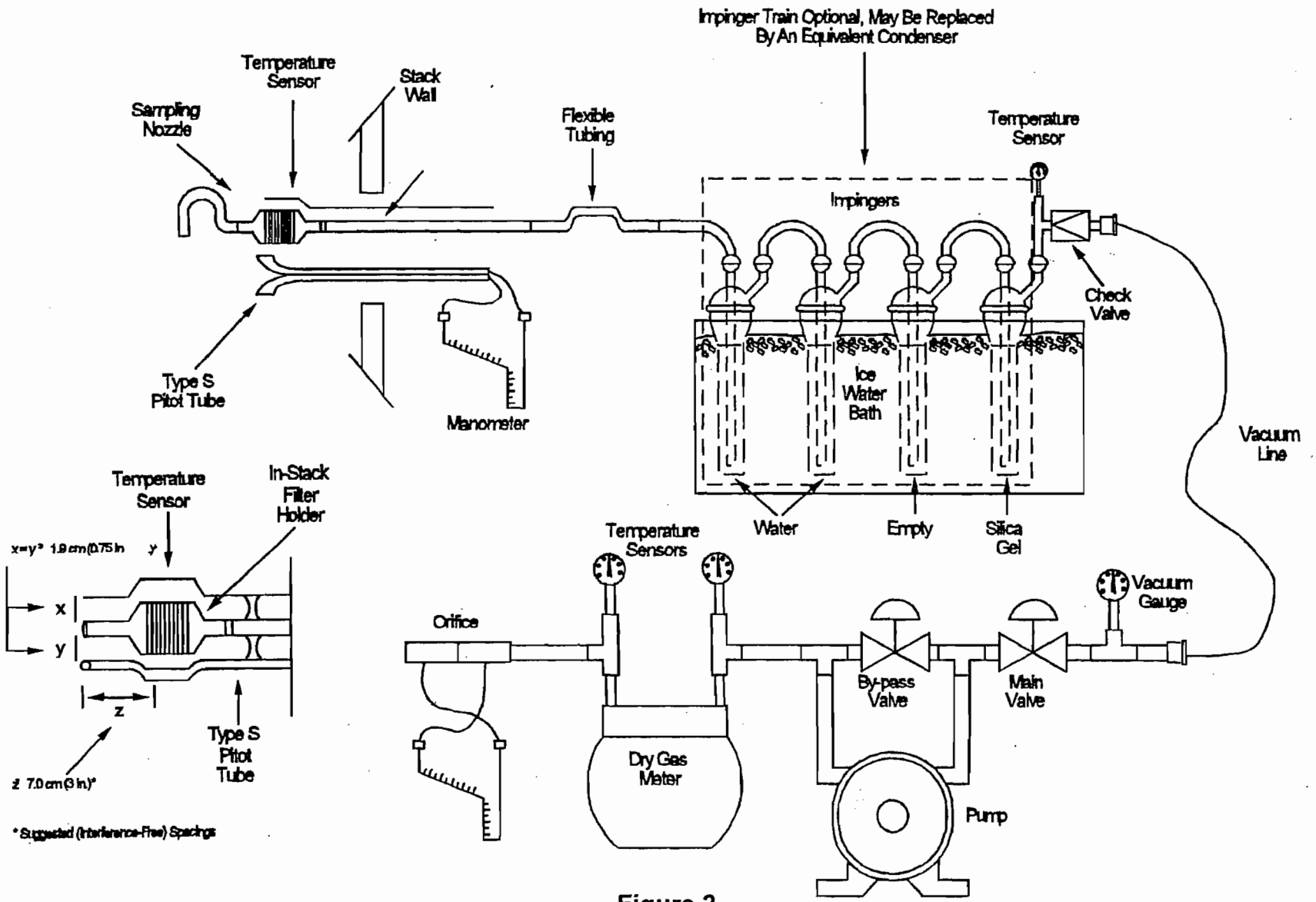

Figure 2

EPA Method 17 Particulate Matter Sample Train

KODGLER & ASSOCIATES, INC.
ENVIRONMENTAL SERVICES

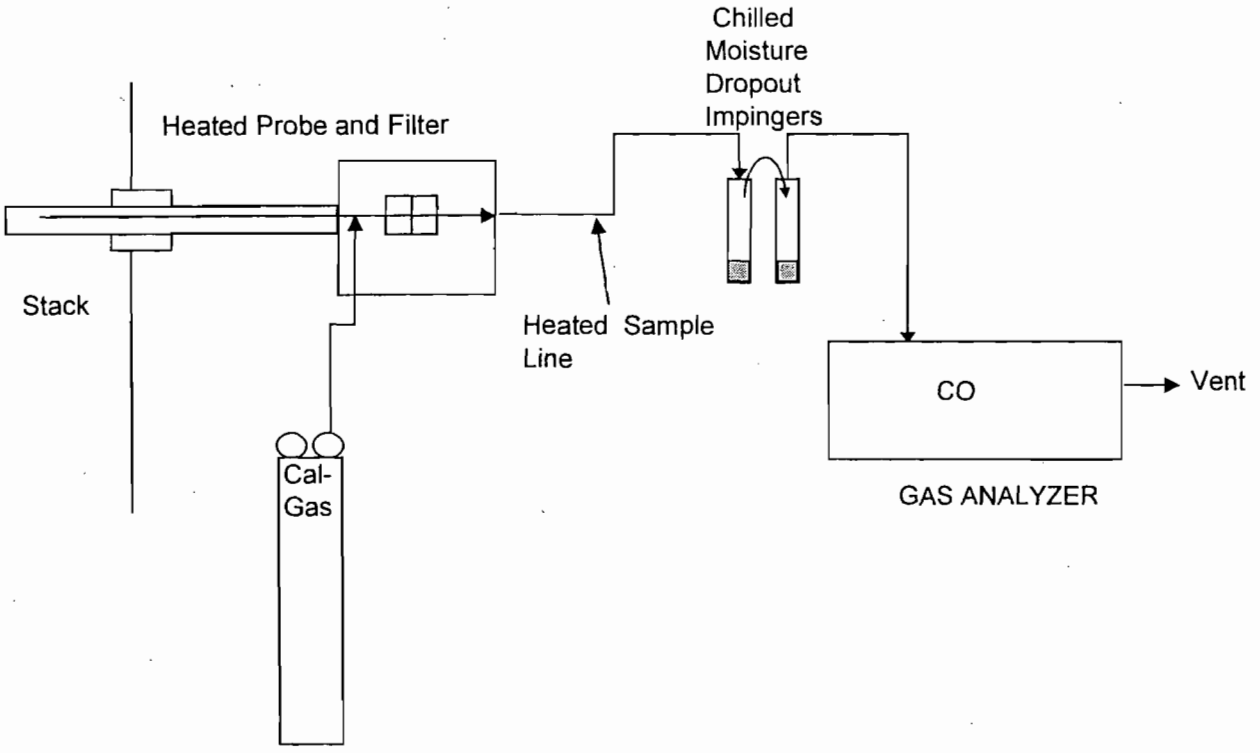

FIGURE 3
Continuous Stack Gas Monitoring System

4.0 SUMMARY OF RESULTS

The results of particulate matter and carbon monoxide emission measurements conducted on the Unit 5 Fossil Fuel Steam Generator during the period of May 22, 2006 and June 5, 2006 are summarized in Table 1 and Table 2 respectively.

4.1 Sub-Bituminous Coal and Bituminous Coal Trial Burn

The power plant boiler was fired with a blend of sub-bituminous and bituminous coal. The firing rate produced an average heat input rate of 6,455 mmBTU/hr or 96.8 percent of the permitted heat input rate. The permitted rate for Unit 5 is 6,665 mmBTU/hr. The average particulate matter emission rate for the six sample runs was 0.003 lb/mmBTU. Unit 5 is limited by permit to 0.1 pounds of particulate matter per million Btu (lb/mmBTU) heat input. The carbon monoxide emission rate for the six sample runs averaged 0.032 lb/mmBTU which is equivalent to 208.6 pounds of CO per hour or 32 ppm in a stack gas flow of 1,510,000 dscfm. The results of the emission measurements conducted during the sub-bituminous and bituminous coal trial burn are summarized in Table 1.

4.2 Normal Bituminous Coal Use

The power plant boiler was fired with bituminous coal during the June 5, 2006 test period. The firing rate produced an average heat input rate of 6,526 mmBTU/hr or 97.9 percent of the permitted heat input rate. The permitted heat input rate for Unit 5 is 6,665 mmBTU/hr. The particulate matter emissions tests on Unit No. 5 during normal operations resulted in an average particulate matter

emission rate of 0.004 lb/mmBTU. Unit 5 is limited by permit to 0.1 pounds of particulate matter per million Btu (lb/mmBTU) heat input. Carbon monoxide emission measurements showed no detectable carbon monoxide in the stack gas (<1 ppm) during the normal operation of Unit 5. Results of the test conducted on June 5, 2006 are summarized in Table 2.

Table 1
Summary of PM/PM10 and CO Emission Measurements

Unit No. 5 PM/PM10 and CO Emission Summary
Progress Energy
Crystal River, Florida
May 22, 2006

Date	Operating Condition	Run No.	Coal Feed (ton/hr)	Heat Input (MMBtu/hr)(1)	Stack Gas Flow (dscfm)	Stack Gas Temp. (F)	Stack Gas Moisture (%)	Stack Gas CO_2 (%)	Particulate Matter (PM/PM10) (gr/dscf)	Particulate Matter (PM/PM10) (lb/hr)	Particulate Matter (PM/PM10) (lb/MMBtu)(2)	Carbon Monoxide (CO)(4)(5) ppmv	Carbon Monoxide (CO)(4)(5) (lb/hr)	Carbon Monoxide (CO)(4)(5) (lb/MMBtu)(3)
05/22/06	Normal	1	253.7	6045	1.50E+06	295	6.8	12.3	0.0017	21.9	0.004	28.6	186.9	0.031
05/22/06	Normal	2	269.0	6411	1.50E+06	295	7.4	12.1	0.0021	26.4	0.004	56.6	371.0	0.058
05/22/06	Normal	3	263.7	6284	1.51E+06	297	7.2	12.1	0.0021	27.3	0.004	31.3	206.8	0.033
05/22/06	Normal	4	295.4	7040	1.52E+06	297	7.8	12.1	0.0016	20.8	0.003	31.4	208.5	0.030
05/22/06	Normal	5	272.5	6494	1.52E+06	296	8.2	12.1	0.0016	20.2	0.003	24.0	158.9	0.024
05/22/06	Normal	6	271.0	6458	1.54E+06	297	7.8	12.2	0.0012	16.1	0.002	17.8	119.5	0.019
		Ave.>	270.9	6455	1.51E+06	296	7.5	12.2	0.0017	22.1	0.003	31.5	208.6	0.032

(1) (MMBtu/hr) = (Ton Coal/Hr) x (2000 lb/ton) x (12515 Btu/pound coal) x (MMBtu / 10^6 Btu)
(2) (lb/MMBtu) = (lb PM/hr) / (MMBtu/hr) see (1)
(3) (lb/MMBtu) = (lb CO/hr) / (MMBtu/hr) see (1)
(4) Corrected to 7% Oxygen
(5) Using EPA Method 19 and EPA Method 20 Conversion Equations, see Table below.

EPA Method 19 Table 19-2	Fd= 9780 dscf/mmBtu Fc= 1800 scf/mmBtu		
EPA Method 20 7.2.1	Fo=(.209*Fd)/Fc	Fo=	1.136
EPA Method 20 7.2.2	X_{CO2}=(20.9%O_2-7 %O_2)/Fo X_{CO2}=(13.9)/Fo	X_{CO2}=	12.2
EPA Method 20 7.3.2	CO corr.=COppmvd x (X_{CO2}/CO2 %)		

Table 2
Summary of PM10 and CO Emission Measurements

Unit No. 5 PM10 and CO Emission Summary
Progress Energy
Crystal River, Florida
June 5, 2006

Date	Operating Condition	Run No.	Coal Feed (ton/hr)	Heat Input (MMBtu/hr)(1)	Stack Gas Flow (dscfm)	Stack Gas Temp. (F)	Stack Gas Moisture (%)	Particulate matter (gr/dscf)	Particulate matter (lb/hr)	Particulate matter (lb/MMBtu)(2)	Carbon Monoxide ppmv	Carbon Monoxide (lb/hr)	Carbon Monoxide (lb/MMBtu)(2)
06/05/06	Normal	1	301.7	6870	1.58E+06	297	8.1	0.0017	22.9	0.003	0.0	0.0	0.000
06/05/06	Normal	2	278.1	6333	1.59E+06	298	7.8	0.0019	25.4	0.004	0.0	0.0	0.000
06/05/06	Normal	3	280.0	6376	1.53E+06	298	8.6	0.0018	23.5	0.004	0.0	0.0	0.000
		Ave.>	286.6	6526	1.56E+06	298	8.1	0.0018	23.9	0.004	0.0	0.0	0.000

(1) (MMBtu/hr) = (Ton Coal/Hr) x (2000 lb/ton) x (12500 Btu/pound coal) x (MMBtu / 10^6 Btu)
(2) (lb/MMBtu) = (lb PM/hr) / (MMBtu/hr) see (1)
(3) (lb/MMBtu) = (lb CO/hr) / (MMBtu/hr) see (1)

Appendix

Unit 5 Sub-Bituminous/Bituminous Coal Trial Burn May 22, 2006

- Calculations
  - Particulate Matter
  - Carbon Monoxide
- Field and Laboratory Data Sheets
  - Particulate Matter
  - Carbon Monoxide
- Sampling Equipment Calibration Records
- Plant Operating Data

Unit 5 Normal Operations June 5, 2006

- Calculations
  - Particulate Matter
  - Carbon Monoxide
- Field and Laboratory Data Sheets
  - Particulate Matter
  - Carbon Monoxide
- Sampling Equipment Calibration Records
- Plant Operating Data

Project Participants

Unit 5 Sub-Bituminous/Bituminous Coal Trial Burn
May 22, 2006

KOOGLER & ASSOCIATES, INC.
ENVIRONMENTAL SERVICES

Calculations

KOOGLER & ASSOCIATES, INC.
ENVIRONMENTAL SERVICES

Particulate Matter

KOOGLER & ASSOCIATES, INC.
ENVIRONMENTAL SERVICES

Progress Energy, Crystal River, FL Unit No. 5 May 22, 2006					
				Particulate Matter	
Run No.	Stack Gas Flow Rate (SCFMD)	Stack Gas Temperature (F)	Stack Gas Moisture (%)	Conc. (gr/dscf)	Emission Rate (Lbs/Hr)
1	1,496,491	295	6.8	0.0017	21.93
2	1,502,732	295	7.4	0.0021	26.45
3	1,512,780	297	7.2	0.0021	27.28
Average	1,504,001	296	7.1	0.0020	25.22

GENERAL DATA

Plant	:	Progress Energy, Crystal River, FL				
Source/Unit	:	Unit No. 5				
Date	:	May 22, 2006		Cp	0.840	
Stack dia.	:	308.00 inch	OR :	Duct Length	0.00	inch
Oxygen Corr.	:	0.0 percent		Duct Width	0.00	inch
CO2 Corr.	:	0.0 percent		Std. Temp.	68	F

FUEL ANALYSIS DATA, (By F Factor or Fuel Use)

F Factor = F, Fuel Use = U f Process Wt.

Hydrogen, wt%	: 0.00	Run 1 :	0 Tons/hr
Carbon, wt%	: 0.00	Run 2 :	0
Sulfur, wt%	: 0.00	Run 3 :	0
Nitrogen, wt%	: 0.00		
Oxygen, wt%	: 0.00		
Btu/lb	: 0		

Type of Flow Meter : (1=Meter Box 2=Mass Flow Meter) 1

F-Factor : dscf/MMBtu;

FIELD DATA METHOD 5	RUN 1	RUN 2	RUN 3
Meter Temp., Tm (F)	91	100	103
Stack Temp., Ts (F)	295	295	297
Sq.Rt. dP	1.10	1.11	1.12
dH (in. H2O)	2.28	2.33	2.48
Meter Vol.,Vm (ft3)	50.328	52.800	54.116
Vol. H2O, Vlc (ml)	75.0	85.0	84.0
Meter Y	0.998	0.998	0.998
Bar. Press.,Pb (in.Hg.)	30.12	30.12	30.12
Static Press.,Ps (in.H2O)	-0.88	-0.88	-0.88
Test Time (min.)	60.0	60.0	60.0
Nozzle Dia.,Dn (in.)	0.232	0.232	0.232
Oxygen, O2 (%)	13.0	8.5	5.0
Carbon Dioxide, CO2 (%)	6.5	8.0	11.0
Carbon Monoxide, CO (%)	0.0	0.0	0.0

Report Emission Criteria in ? 1 = lb/hr g = gr/dscf : grams

Process Rate Units ? T = Ton/hr, L = Lbs/hr, C = Cans/min: T

Allowable Particulate Matter Concentration .....: 0

LABORATORY RESULTS	RUN 1 grams	RUN 2 grams	RUN 3 grams
GRAVIMETRIC ANALYSIS METHOD 5 :			
Front Half Wash (FHW)	0.00160	0.00230	0.00220
Filterable Sample (MF)	0.00380	0.00440	0.00480
Condensible Sample (BHW)	0.00000	0.00000	0.00000

A. FIELD DATA SUMMARY

Plant: Progress Energy, Crystal River, FL
Source/Unit: Unit No. 5
Date: May 22, 2006

	RUN 1	RUN 2	RUN 3
Vlc = Vol water collected in train, ml	75.0	85.0	84.0
Vm = Sample gas vol, meter cond., acf	50.328	52.800	54.116
Y = Meter calibration factor	0.9980	0.9980	0.9980
Pbar = Barometric pressure, in. Hg	30.12	30.12	30.12
Pstatic = Stack static pressure, in. H2O	-0.88	-0.88	-0.88
dH = Avg meter pressure diff, in. H2O	2.28	2.33	2.48
Tm = Absolute meter temp., degrees R	550.8	559.5	562.6
Vm(std) = Sample gas vol, Std. cond., dscf	48.737	50.344	51.335
Bws = Water vapor in gas stream, fraction	0.068	0.074	0.072
MF = Moisture factor (1 - Bws)	0.932	0.926	0.928
CO2 = Carbon Dioxide, dry, volume %	6.50	8.00	11.00
O2 = Oxygen, dry, volume %	13.00	8.50	5.00
N2 = Nitrogen, dry volume %	80.50	83.50	84.00
Md = Molecular weight of stack gas, dry	29.56	29.62	29.96
Ms = Molecular weight of stack gas, wet	28.78	28.76	29.10
Cp = Pitot tube coefficient	0.84	0.84	0.84
Sq.Rt. dP = Avg. square root of each dP	1.0966	1.1084	1.1212
Ts = Absolute stack temp., degrees R	754.7	755.1	756.9
A = Area of stack, ft2	517.40	517.40	517.40
Qstd = Volumetric flowrate, dscfm	1,496,491	1,502,732	1,512,780
An = Nozzle area, ft2	2.94E-04	2.94E-04	2.94E-04
0 = Sample time, minutes	60.00	60.00	60.00
%I = Isokinetic variation, percent	95.67	98.42	99.69

B. PARTICULATE DATA SUMMARY

Plant: Progress Energy, Crystal River, FL
Source/Unit: Unit No. 5
Date: May 22, 2006

	RUN 1	RUN 2	RUN 3
Sample Weight (FHW + MF + BHW), mg	5.40	6.70	7.00
Meter Volume, standard cond., Vm(std)	48.737	50.344	51.335
Carbon Dioxide, percent	6.50	8.00	11.00
Oxygen, percent	13.00	8.50	5.00
Sample Concentration :			
gr/scf	0.0016	0.0019	0.0020
gr/dscf	0.0017	0.0021	0.0021
gr/dscf @ 0 % CO2	0.0032	0.0031	0.0023
gr/dscf @ 0 % O2	0.0045	0.0035	0.0028
ppm * MW (dry gas).....	94.0	113.0	115.7
ppm * MW @ 0% CO2	0.0	0.0	0.0
ppm * MW @ 0% O2	248.8	190.4	152.1

EMISSION RATE CALCULATIONS

Plant : Progress Energy, Crystal River, FL
Source/Unit : Unit No. 5
Date: May 22, 2006 RUN NO.: 1
STANDARD TEMP. : 68 F

Front Half Wash (FHW)	0.00160	grams	Vm(std)	48.737	ft3
Mass Filter (MF)	0.00380	grams	Vw(std)	3.530	ft3
Back Half Wash (BHW)	0.00000	grams	Qs(std)	1,496,491	dscfm
Vm(std) SO2		dscf	Bws	0.068	
CO2 CORR. 0.0 %			CO2	6.50	%
O2 CORR.: 0.0 %			O2	13.00	%

F-FACTOR

10E6 x [3.64(%H) + 1.53(%C) + 0.57(%S) + 0.14(%N) - 0.46(%O2)] / (Btu/lb) x [(Tstd + 460)/528] ..... dscf/MMBtu

FUEL USE

Use Rate (gal/ton) * Process Wt. (ton/hr) ..... gal/hr
Heat Input = (Process Weight (ton/hr) x Heating .... MMBtu/hr
Value (Btu/gal) x Fuel Use Rate (gal/ton) / 1E6

TOTAL PARTICULATE

15.432 x (FHW + MF + BHW) / [(Vm(std) + Vw(std)] ...	0.0016	gr/scf
15.432 x (FHW + MF + BHW) / (Vm(std)	0.0017	gr/dscf
gr/dscf x (12 / %CO2)	0.0032	@ 0% CO2
gr/dscf x [(20.9 - Oxygen corr.) / (20.9 - %O2)]	0.0045	@ 0% O2
0.00857 x Qs(std) x gr/dscf	21.93	lb/hr
F-Fac x 1.4286E-4 x [20.9 / (20.9-%O2)] x gr/dscf ..		lb/MMBtu
Particulate (lb/hr) / Heat Input (MMBtu/hr)		lb/MMBtu

TOTAL ACID MIST

[1.0811E-4 x (Vt - Vtb) x N x Vsol] / Vol(aloq) . lb Acid Mist
[Acid Mist (lb) / Vm std (ft^3)] x Qs std x 60 ... lb/hr
[Acid Mist (lb) / Vm std (ft^3)] x F-Factor ..... lb/MMBtu

SULFUR DIOXIDE (SO2)

[7.061E-5 x (Vt - Vtb) x N x Vsol] / Vol(aloq) lb SO2
[SO2 (lb) / Vm std (ft^3)] x Qs std (ft^3/min) x 60 ... lb/hr
[SO2 (lb) / Vm std (ft^3)] x F ..... lb/MMBtu
[Mass SO2 (lb) x 385 / 64E+6 (ft^3/lb)] / Vm (std) ppm
ppm x 0.0 % Corr. / 6.5 % CO2 in Stack ..... ppm @ 0% CO2
ppm x (20.9% - 0.0% O2 Corr)/(20.9% - 13.0% O2 Stack) ppm @ 0% O2
SO2 (lb/hr / Heat Input) ..... lb/MMBtu

HYDROGEN CHLORIDE DATA SUMMARY

[Mass HCl(mg) x 385 x 1E6] / [453600 x 36.5 x Vm(std)].. ppm
ppm x 0.0 % Corr. / 6.5 % CO2 in Stack ..... ppm @ 0% CO2
ppm x (20.9% - 0.0% O2 Corr)/(20.9% - 6.5% O2 Stack) ppm @ 0% O2
[Mass HCl(mg) x 60 x Qs / (Vm(std) x 453,600)]..... lb/hr

EMISSION RATE CALCULATIONS

Plant : Progress Energy, Crystal River, FL
Source/Unit : Unit No. 5
Date: May 22, 2006 RUN NO.: 2
STANDARD TEMP. : 68 F

Front Half Wash (FHW)	0.00230	grams	Vm(std)	50.344	ft3
Mass Filter (MF)	0.00440	grams	Vw(std)	4.001	ft3
Back Half Wash (BHW)	0.00000	grams	Qs(std)	1,502,732	dscfm
Vm(std) SO2		dscf	Bws	0.074	
CO2 CORR. 0.0 %			CO2	8.00	%
O2 CORR.: 0.0 %			O2	8.50	%

F-FACTOR

10E6 x [3.64(%H) + 1.53(%C) + 0.57(%S) + 0.14(%N) - 0.46(%O2)] / (Btu/lb) x [(Tstd + 460)/528] ..... dscf/MMBtu

FUEL USE

-

Use Rate (gal/ton) * Process Wt. (ton/hr) ..... gal/hr
Heat Input = (Process Weight (ton/hr) x Heating .... MMBtu/hr
Value (Btu/gal) x Fuel Use Rate (gal/ton) / 1E6

TOTAL PARTICULATE

15.432 x (FHW + MF + BHW) / [(Vm(std) + Vw(std)] ...	0.0019	gr/scf
15.432 x (FHW + MF + BHW) / (Vm(std)	0.0021	gr/dscf
gr/dscf x (12 / %CO2)	0.0031	@ 0% CO2
gr/dscf x [(20.9 - Oxygen corr.) / (20.9 - %O2)]	0.0035	@ 0% O2
0.00857 x Qs(std) x gr/dscf	26.45	lb/hr
F-Fac x 1.4286E-4 x [20.9 / (20.9-%O2)] x gr/dscf ..		lb/MMBtu
Particulate (lb/hr) / Heat Input (MMBtu/hr)		lb/MMBtu

TOTAL ACID MIST

[1.0811E-4 x (Vt - Vtb) x N x Vsol] / Vol(aloq) . lb Acid Mist
[Acid Mist (lb) / Vm std (ft^3)] x Qs std x 60 ... lb/hr
[Acid Mist (lb) / Vm std (ft^3)] x F-Factor ..... lb/MMBtu

SULFUR DIOXIDE (SO2)

[7.061E-5 x (Vt - Vtb) x N x Vsol] / Vol(aloq) . lb SO2
[SO2 (lb) / Vm std (ft^3)] x Qs std (ft^3/min) x 60 ... lb/hr
[SO2 (lb) / Vm std (ft^3)] x F ..... lb/MMBtu
[Mass SO2 (lb) x 385 / 64E+6 (ft^3/lb)] / Vm (std) ppm
ppm x 0.0 % Corr. / 6.5 % CO2 in Stack ..... ppm @ 0% CO2
ppm x (20.9% - 0.0% O2 Corr)/(20.9% - 6.5% O2 Stack) ppm @ 0% O2
SO2 (lb/hr / Heat Input) ..... lb/MMBtu

HYDROGEN CHLORIDE DATA SUMMARY

[Mass HCl(mg) x 385 x 1E6] / [453600 x 36.5 x Vm(std)].. ppm
ppm x 0.0 % Corr. / 8.0 % CO2 in Stack ..... ppm @ 0% CO2
ppm x (20.9% - 0.0% O2 Corr)/(20.9% - 8.0% O2 Stack) ppm @ 0% O2
[Mass HCl(mg) x 60 x Qs / (Vm(std) x 453,600)]..... lb/hr

EMISSION RATE CALCULATIONS

Plant :	Progress Energy, Crystal River, FL		
Source/Unit :	Unit No. 5		
Date:	May 22, 2006	RUN NO.:	3
STANDARD TEMP. :	68 F		

Front Half Wash (FHW)	0.00220	grams	Vm(std)	51.335	ft3
Mass Filter (MF)	0.00480	grams	Vw(std)	3.954	ft3
Back Half Wash (BHW)	0.00000	grams	Qs(std)	1,512,780	dscfm
Vm(std) SO2		dscf	Bws	0.072	
CO2 CORR. 0.0 %			CO2	11.00	%
O2 CORR.: 0.0 %			O2	5.00	%

F-FACTOR

10E6 x [3.64(%H) + 1.53(%C) + 0.57(%S) + 0.14(%N) - 0.46(%O2)] / (Btu/lb) x [(Tstd + 460)/528]	dscf/MMBtu

FUEL USE

Use Rate (gal/ton) * Process Wt. (ton/hr)	gal/hr
Heat Input = (Process Weight (ton/hr) x Heating .... Value (Btu/gal) x Fuel Use Rate (gal/ton) / 1E6	MMBtu/hr

TOTAL PARTICULATE

15.432 x (FHW + MF + BHW) / [(Vm(std) + Vw(std)] ...	0.0020	gr/scf
15.432 x (FHW + MF + BHW) / (Vm(std)	0.0021	gr/dscf
gr/dscf x (12 / %CO2)	0.0023	@ 0% CO2
gr/dscf x [(20.9 - Oxygen corr.) / (20.9 - %O2)]	0.0028	@ 0% O2
0.00857 x Qs(std) x gr/dscf	27.28	lb/hr
F-Fac x 1.4286E-4 x [20.9 / (20.9-%O2)] x gr/dscf ..		lb/MMBtu
Particulate (lb/hr) / Heat Input (MMBtu/hr)		lb/MMBtu

TOTAL ACID MIST

[1.0811E-4 x (Vt - Vtb) x N x Vsol] / Vol(aloq) .	lb Acid Mist
[Acid Mist (lb) / Vm std (ft^3)] x Qs std x 60 ...	lb/hr
[Acid Mist (lb) / Vm std (ft^3)] x F-Factor	lb/MMBtu

SULFUR DIOXIDE (SO2)

[7.061E-5 x (Vt - Vtb) x N x Vsol] / Vol(aloq) .	lb SO2
[SO2 (lb) / Vm std (ft^3)] x Qs std (ft^3/min) x 60 ...	lb/hr
[SO2 (lb) / Vm std (ft^3)] x F	lb/MMBtu
[Mass SO2 (lb) x 385 / 64E+6 (ft^3/lb)] / Vm (std)	ppm
ppm x 0.0 % Corr. / 6.5 % CO2 in Stack	ppm @ 0% CO2
ppm x (20.9% - 0.0% O2 Corr)/(20.9% - 6.5% O2 Stack)	ppm @ 0% O2
SO2 (lb/hr / Heat Input)	lb/MMBtu

HYDROGEN CHLORIDE DATA SUMMARY

[Mass HCl(mg) x 385 x 1E6] / [453600 x 36.5 x Vm(std)]..	ppm
ppm x 0.0 % Corr. / 11.0 % CO2 in Stack	ppm @ 0% CO2
ppm x (20.9% - 0.0% O2 Corr)/(20.9% - 11.0% O2 Stack)	ppm @ 0% O2
[Mass HCl(mg) x 60 x Qs / (Vm(std) x 453,600)].....	lb/hr

SOURCE TEST CALCULATIONS

Plant : Progress Energy, Crystal River, FL
Source/Unit : Unit No. 5 RUN NO.: 1
Date: May 22, 2006

STD.TEMP, Tstd =	68	F	STATIC PRESS.,Ps =	-0.88	in. H2O
METER TEMP, Tm =	90.83333	F	PITOT COFF., Cp =	0.840	
STACK TEMP, Ts =	294.7	F	STACK I.D. =	308.00	inch
AVG.VEL.HEAD,dP =	1.203	in. H2O	DUCT LENGTH =		inch
METER ORIFICE,dH=	2.28	in. H2O	DUCT WIDTH =		inch
METER VOL., Vm =	50.328	Cu.Ft.	STACK AREA, As =	517.403	Sq.Ft.
METER COFF., Y =	0.998		TEST TIME =	60.00	min.
BAR. PRESS., Pb =	30.12	in.Hg	NOZZLE DIA. =	0.232	inch
COND.(Vlc) =	75.0	ml	NOZZLE DIA., An =	2.9E-04	Sq.Ft.

GAS ANALYSIS =	13.00	% O2	0.00	% CO
	6.50	% CO2	80.50	% N2

Vm(std) = [(T(std) + 460) / 29.92] x Vm x Y x
(Pb + (dH / 13.6)) / (Tm + 460)..... = 48.737 dscf

Vw(std) = (8.9148 x 10e-5) x (Tstd + 460) x Vlc = 3.530 scf

Bws = Vw(std) / (Vm(std) + Vw(std))..... = 0.068 | Lower Bws value used.

Bws @ Saturated Conditions = Vapor Press. of H2O
@ Dew Point Temp. / (Ps, in.Hg.) ..... = 1.000

%EA =(%O2 - 0.5%CO)/(0.264%N2 - (%O2-0.5%CO)) x 100 = 157.54

Md =(.44 x %CO2)+(.32 x %O2)+[.28 x (%N2 + %CO)] = 29.56

Ms = (Md x (1-Bws)) + (18.0 x Bws)..... = 28.78

P(stack) = Pbar + (Ps / 13.6) ..... = 30.06 in. Hg

vs = 85.49 x CP x (Sq.Rt.dP) x [Sq.Rt.(Ts + 460)
/ (Ms x P(stack))] ..... = 73.56 ft/sec

Qs = vs x As x 60 ..... = 2,283,531 acf/min

Qs(std) = Qs x (1-Bws)x((Tstd + 460)/(Ts + 460))
x (P(stack)/29.92) ..... = 1,496,491 dscf/min

I = (Ts+460) x [(0.002669 x Vlc) + (Vm(std) /
(T(std) + 460) / 29.92] x 100 / [Time x
P(stack) x An x vs x 60] ..... = 95.67 %

SOURCE TEST CALCULATIONS

Plant : Progress Energy, Crystal River, FL
Source/Unit : Unit No. 5 RUN NO.: 2
Date : May 22, 2006

STD.TEMP, Tstd =	68	F	STATIC PRESS.,Ps =	-0.88	in. H2O
METER TEMP, Tm =	99.50	F	PITOT COFF., Cp =	0.840	
STACK TEMP, Ts =	295.1	F	STACK I.D. =	308.00	inch
AVG.VEL.HEAD,dP =	1.229	in. H2O	DUCT LENGTH =		inch
METER ORIFICE,dH=	2.33	in. H2O	DUCT WIDTH =		inch
METER VOL., Vm =	52.800	Cu.Ft.	STACK AREA, As =	517.403	Sq.Ft.
METER COFF., Y =	0.998		TEST TIME =	60.00	min.
BAR. PRESS., Pb =	30.12	in.Hg	NOZZLE DIA. =	0.232	inch
COND.(Vlc) =	85.0	ml	NOZZLE DIA., An =	2.9E-04	Sq.Ft.

GAS ANALYSIS =	8.50	% O2	0.00	% CO
	8.00	% CO2	83.50	% N2

Vm(std) = [(T(std) + 460) / 29.92] x Vm x Y x (Pb + (dH / 13.6)) / (Tm + 460)..... = 50.344 dscf

Vw(std) = (8.9148 x 10e-5) x (Tstd + 460) x Vlc = 4.001 scf

Bws = Vw(std) / (Vm(std) + Vw(std))..... = 0.074 | Lower Bws value used.

Bws @ Saturated Conditions = Vapor Press. of H2O @ Dew Point Temp. / (Ps, in.Hg.) ..... = 1.000

%EA =(%O2 - 0.5%CO)/(0.264%N2 - (%O2-0.5%CO)) x 100 = 62.76

Md =(.44 x %CO2)+(.32 x %O2)+[.28 x (%N2 + %CO)] = 29.62

Ms = (Md x (1-Bws)) + (18.0 x Bws)..... = 28.76

P(stack) = Pbar + (Ps / 13.6) ..... = 30.06 in. Hg

vs = 85.49 x CP x (Sq.Rt.dP) x [Sq.Rt.(Ts + 460) / (Ms x P(stack))] ..... = 74.39 ft/sec

Qs = vs x As x 60 ..... = 2,309,375 acf/min

Qs(std) = Qs x (1-Bws)x((Tstd + 460)/(Ts + 460)) x (P(stack)/29.92) ..... = 1,502,732 dscf/min

I = (Ts+460) x [(0.002669 x Vlc) + (Vm(std) / (T(std) + 460) / 29.92] x 100 / [Time x P(stack) x An x vs x 60] ..... = 98.42 %

SOURCE TEST CALCULATIONS

Plant : Progress Energy, Crystal River, FL
Source/Unit : Unit No. 5 RUN NO.: 3
Date : May 22, 2006

STD.TEMP, Tstd =	68	F	STATIC PRESS.,Ps =	-0.88	in. H2O
METER TEMP, Tm =	102.58	F	PITOT COFF., Cp =	0.840	
STACK TEMP, Ts =	296.9	F	STACK I.D. =	308.00	inch
AVG.VEL.HEAD,dP =	1.257	in. H2O	DUCT LENGTH =		inch
METER ORIFICE,dH=	2.48	in. H2O	DUCT WIDTH =		inch
METER VOL., Vm =	54.116	Cu.Ft.	STACK AREA, As =	517.403	Sq.Ft.
METER COFF., Y =	0.998		TEST TIME =	60.00	min.
BAR. PRESS., Pb =	30.12	in.Hg	NOZZLE DIA. =	0.232	inch
COND.(Vlc) =	84.0	ml	NOZZLE DIA., An =	2.9E-04	Sq.Ft.

GAS ANALYSIS =	5.00	% O2	0.00	% CO
	11.00	% CO2	84.00	% N2

Vm(std) = [(T(std) + 460) / 29.92] x Vm x Y x
(Pb + (dH / 13.6)) / (Tm + 460)..... = 51.335 dscf

Vw(std) = (8.9148 x 10e-5) x (Tstd + 460) x Vlc = 3.954 scf

Bws = Vw(std) / (Vm(std) + Vw(std))..... = 0.072 | Lower Bws value used.

Bws @ Saturated Conditions = Vapor Press. of H2O
@ Dew Point Temp. / (Ps, in.Hg.) ..... = 1.000

%EA =(%O2 - 0.5%CO)/(0.264%N2 - (%O2-0.5%CO)) x 100 = 29.11

Md =(.44 x %CO2)+(.32 x %O2)+[.28 x (%N2 + %CO)] = 29.96

Ms = (Md x (1-Bws)) + (18.0 x Bws)..... = 29.10

P(stack) = Pbar + (Ps / 13.6) ..... = 30.06 in. Hg

vs = 85.49 x CP x (Sq.Rt.dP) x [Sq.Rt.(Ts + 460)
/ (Ms x P(stack))] ..... = 74.90 ft/sec

Qs = vs x As x 60 ..... = 2,325,169 acf/min

Qs(std) = Qs x (1-Bws)x((Tstd + 460)/(Ts + 460))
x (P(stack)/29.92) ..... = 1,512,780 dscf/min

I = (Ts+460) x [(0.002669 x Vlc) + (Vm(std) /
(T(std) + 460) / 29.92] x 100 / [Time x
P(stack) x An x vs x 60] ..... = 99.69 %

Progress Energy, Crystal River, FL
Unit No. 5
May 22, 2006

Run No.	Stack Gas Flow Rate (SCFMD)	Stack Gas Temperature (F)	Stack Gas Moisture (%)	Particulate Matter	
				Conc. (gr/dscf)	Emission Rate (Lbs/Hr)
4	1,519,539	297	7.8	0.0016	20.82
5	1,518,273	296	8.2	0.0016	20.19
6	1,535,655	297	7.8	0.0012	16.07
Average	1,524,489	296	7.9	0.0015	19.03

GENERAL DATA

Plant	:	Progress Energy, Crystal River, FL				
Source/Unit	:	Unit No. 5				
Date	:	May 22, 2006		Cp	0.840	
Stack dia.	:	308.00	inch OR :	Duct Length	0.00	inch
Oxygen Corr.	:	0.0	percent	Duct Width	0.00	inch.
CO2 Corr.	:	0.0	percent	Std. Temp.	68	F

FUEL ANALYSIS DATA, (By F Factor or Fuel Use)

F Factor = F, Fuel Use = U		f	Process Wt.
Hydrogen, wt% :	0.00	Run 1 :	0 Tons/hr
Carbon, wt% :	0.00	Run 2 :	0
Sulfur, wt% :	0.00	Run 3 :	0
Nitrogen, wt% :	0.00		
Oxygen, wt% :	0.00		
Btu/lb :	0		

Type of Flow Meter : (1=Meter Box 2=Mass Flow Meter) 1

F-Factor : dscf/MMBtu;

FIELD DATA METHOD 5	RUN 4	RUN 5	RUN 6
Meter Temp., Tm (F)	103	103	103
Stack Temp., Ts (F)	297	296	297
Sq.Rt. dP	1.13	1.13	1.14
dH (in. H2O)	2.53	2.53	2.58
Meter Vol.,Vm (ft3)	55.020	54.555	54.615
Vol. H2O, Vlc (ml)	94.0	98.0	93.0
Meter Y	0.998	0.998	0.998
Bar. Press.,Pb (in.Hg.)	30.12	30.12	30.12
Static Press.,Ps (in.H2O)	-0.88	-0.88	-0.88
Test Time (min.)	60.0	60.0	60.0
Nozzle Dia.,Dn (in.)	0.232	0.232	0.232
Oxygen, O2 (%)	4.0	4.0	5.0
Carbon Dioxide, CO2 (%)	11.0	10.5	10.5
Carbon Monoxide, CO (%)	0.0	0.0	0.0

Report Emission Criteria in ? l = lb/hr g = gr/dscf : grams

Process Rate Units ? T = Ton/hr, L = Lbs/hr, C = Cans/min: T

Allowable Particulate Matter Concentration .....: 0

LABORATORY RESULTS	RUN 4 grams	RUN 5 grams	RUN 6 grams
GRAVIMETRIC ANALYSIS METHOD 5 :			
Front Half Wash (FHW)	0.00160	0.00100	0.00070
Filterable Sample (MF)	0.00380	0.00420	0.00340
Condensible Sample (BHW)	0.00000	0.00000	0.00000

A. FIELD DATA SUMMARY

Plant: Progress Energy, Crystal River, FL
Source/Unit: Unit No. 5
Date: May 22, 2006

	RUN 4	RUN 5	RUN 6
Vlc = Vol water collected in train, ml	94.0	98.0	93.0
Vm = Sample gas vol, meter cond., acf	55.020	54.555	54.615
Y = Meter calibration factor	0.9980	0.9980	0.9980
Pbar = Barometric pressure, in. Hg	30.12	30.12	30.12
Pstatic = Stack static pressure, in. H2O	-0.88	-0.88	-0.88
dH = Avg meter pressure diff, in. H2O	2.53	2.53	2.58
Tm = Absolute meter temp., degrees R	563.4	563.0	562.7
Vm(std) = Sample gas vol, Std. cond., dscf	52.122	51.720	51.813
Bws = Water vapor in gas stream, fraction	0.078	0.082	0.078
MF = Moisture factor (1 - Bws)	0.922	0.918	0.922
CO2 = Carbon Dioxide, dry, volume %	11.00	10.50	10.50
O2 = Oxygen, dry, volume %	4.00	4.00	5.00
N2 = Nitrogen, dry volume %	85.00	85.50	84.50
Md = Molecular weight of stack gas, dry	29.92	29.84	29.88
Ms = Molecular weight of stack gas, wet	28.99	28.87	28.95
Cp = Pitot tube coefficient	0.84	0.84	0.84
Sq.Rt. dP = Avg. square root of each dP	1.1320	1.1326	1.1429
Ts = Absolute stack temp., degrees R	756.7	755.8	756.7
A = Area of stack, ft2	517.40	517.40	517.40
Qstd = Volumetric flowrate, dscfm	1,519,539	1,518,273	1,535,655
An = Nozzle area, ft2	2.94E-04	2.94E-04	2.94E-04
0 = Sample time, minutes	60.00	60.00	60.00
%I = Isokinetic variation, percent	100.76	100.07	99.12

B. PARTICULATE DATA SUMMARY

Plant: Progress Energy, Crystal River, FL
Source/Unit: Unit No. 5
Date: May 22, 2006

	RUN 4	RUN 5	RUN 6
Sample Weight (FHW + MF + BHW), mg	5.40	5.20	4.10
Meter Volume, standard cond., Vm(std)	52.122	51.720	51.813
Carbon Dioxide, percent	11.00	10.50	10.50
Oxygen, percent	4.00	4.00	5.00
Sample Concentration :			
gr/scf	0.0015	0.0014	0.0011
gr/dscf	0.0016	0.0016	0.0012
gr/dscf @ 0 % CO2	0.0017	0.0018	0.0014
gr/dscf @ 0 % O2	0.0020	0.0019	0.0016
ppm * MW (dry gas).....	87.9	85.3	67.2
ppm * MW @ 0% CO2	0.0	0.0	0.0
ppm * MW @ 0% O2	108.7	105.5	88.3

EMISSION RATE CALCULATIONS

Plant : Progress Energy, Crystal River, FL
Source/Unit : Unit No. 5
Date: May 22, 2006 RUN NO.: 4
STANDARD TEMP. : 68 F

Front Half Wash (FHW)	0.00160	grams	Vm(std)	52.122	ft3
Mass Filter (MF)	0.00380	grams	Vw(std)	4.425	ft3
Back Half Wash (BHW)	0.00000	grams	Qs(std)	1,519,539	dscfm
Vm(std) SO2		dscf	Bws	0.078	
CO2 CORR. 0.0 %			CO2	11.00	%
O2 CORR.: 0.0 %			O2	4.00	%

F-FACTOR

10E6 x [3.64(%H) + 1.53(%C) + 0.57(%S) + 0.14(%N) - 0.46(%O2)] / (Btu/lb) x [(Tstd + 460)/528] ..... dscf/MMBtu

FUEL USE

Use Rate (gal/ton) * Process Wt. (ton/hr) ..... gal/hr
Heat Input = (Process Weight (ton/hr) x Heating .... MMBtu/hr
Value (Btu/gal) x Fuel Use Rate (gal/ton) / 1E6

TOTAL PARTICULATE

15.432 x (FHW + MF + BHW) / [(Vm(std) + Vw(std)] ...	0.0015	gr/scf
15.432 x (FHW + MF + BHW) / (Vm(std)	0.0016	gr/dscf
gr/dscf x (12 / %CO2)	0.0017	@ 0% CO2
gr/dscf x [(20.9 - Oxygen corr.) / (20.9 - %O2)]	0.0020	@ 0% O2
0.00857 x Qs(std) x gr/dscf	20.82	lb/hr
F-Fac x 1.4286E-4 x [20.9 / (20.9-%O2)] x gr/dscf ..		lb/MMBtu
Particulate (lb/hr) / Heat Input (MMBtu/hr)		lb/MMBtu

TOTAL ACID MIST

[1.0811E-4 x (Vt - Vtb) x N x Vsol] / Vol(aloq) . lb Acid Mist
[Acid Mist (lb) / Vm std (ft^3)] x Qs std x 60 ... lb/hr
[Acid Mist (lb) / Vm std (ft^3)] x F-Factor ..... lb/MMBtu

SULFUR DIOXIDE (SO2)

[7.061E-5 x (Vt - Vtb) x N x Vsol] / Vol(aloq) lb SO2
[SO2 (lb) / Vm std (ft^3)] x Qs std (ft^3/min) x 60 ... lb/hr
[SO2 (lb) / Vm std (ft^3)] x F ..... lb/MMBtu
[Mass SO2 (lb) x 385 / 64E+6 (ft^3/lb)] / Vm (std) ppm
ppm x 0.0 % Corr. / 11.0 % CO2 in Stack ..... ppm @ 0% CO2
ppm x (20.9% - 0.0% O2 Corr)/(20.9% - 4.0% O2 Stack) ppm @ 0% O2
SO2 (lb/hr / Heat Input) ..... lb/MMBtu

HYDROGEN CHLORIDE DATA SUMMARY

[Mass HCl(mg) x 385 x 1E6] / [453600 x 36.5 x Vm(std)].. ppm
ppm x 0.0 % Corr. / 11.0 % CO2 in Stack ..... ppm @ 0% CO2
ppm x (20.9% - 0.0% O2 Corr)/(20.9% - 11.0% O2 Stack) ppm @ 0% O2
[Mass HCl(mg) x 60 x Qs / (Vm(std) x 453,600)]..... lb/hr

EMISSION RATE CALCULATIONS

Plant : Progress Energy, Crystal River, FL
Source/Unit : Unit No. 5
Date: May 22, 2006 RUN NO.: 5
STANDARD TEMP. : 68 F

Front Half Wash (FHW)	0.00100	grams	Vm(std)	51.720	ft3
Mass Filter (MF)	0.00420	grams	Vw(std)	4.613	ft3
Back Half Wash (BHW)	0.00000	grams	Qs(std)	1,518,273	dscfm
Vm(std) SO2		dscf	Bws	0.082	
CO2 CORR. 0.0 %			CO2	10.50	%
O2 CORR.: 0.0 %			O2	4.00	%

F-FACTOR

10E6 x [3.64(%H) + 1.53(%C) + 0.57(%S) + 0.14(%N) - 0.46(%O2)] / (Btu/lb) x [(Tstd + 460)/528] ..... dscf/MMBtu

FUEL USE

Use Rate (gal/ton) * Process Wt. (ton/hr) ..... gal/hr
Heat Input = (Process Weight (ton/hr) x Heating .... MMBtu/hr
Value (Btu/gal) x Fuel Use Rate (gal/ton) / 1E6

TOTAL PARTICULATE

15.432 x (FHW + MF + BHW) / [(Vm(std) + Vw(std)] ...	0.0014	gr/scf
15.432 x (FHW + MF + BHW) / (Vm(std)	0.0016	gr/dscf
gr/dscf x (12 / %CO2)	0.0018	@ 0% CO2
gr/dscf x [(20.9 - Oxygen corr.) / (20.9 - %O2)]	0.0019	@ 0% O2
0.00857 x Qs(std) x gr/dscf	20.19	lb/hr
F-Fac x 1.4286E-4 x [20.9 / (20.9-%O2)] x gr/dscf ..		lb/MMBtu
Particulate (lb/hr) / Heat Input (MMBtu/hr)		lb/MMBtu

TOTAL ACID MIST

[1.0811E-4 x (Vt - Vtb) x N x Vsol] / Vol(aloq) . lb Acid Mist
[Acid Mist (lb) / Vm std (ft^3)] x Qs std x 60 ... lb/hr
[Acid Mist (lb) / Vm std (ft^3)] x F-Factor ..... lb/MMBtu

SULFUR DIOXIDE (SO2)

[7.061E-5 x (Vt - Vtb) x N x Vsol] / Vol(aloq) . lb SO2
[SO2 (lb) / Vm std (ft^3)] x Qs std (ft^3/min) x 60 ... lb/hr
[SO2 (lb) / Vm std (ft^3)] x F ..... lb/MMBtu
[Mass SO2 (lb) x 385 / 64E+6 (ft^3/lb)] / Vm (std) ppm
ppm x 0.0 % Corr. / 11.0 % CO2 in Stack ..... ppm @ 0% CO2
ppm x (20.9% - 0.0% O2 Corr)/(20.9% - 11.0% O2 Stack) ppm @ 0% O2
SO2 (lb/hr / Heat Input) ..... lb/MMBtu

HYDROGEN CHLORIDE DATA SUMMARY

[Mass HCl(mg) x 385 x 1E6] / [453600 x 36.5 x Vm(std)].. ppm
ppm x 0.0 % Corr. / 10.5 % CO2 in Stack ..... ppm @ 0% CO2
ppm x (20.9% - 0.0% O2 Corr)/(20.9% - 10.5% O2 Stack) ppm @ 0% O2
[Mass HCl(mg) x 60 x Qs / (Vm(std) x 453,600)]..... lb/hr

EMISSION RATE CALCULATIONS

Plant : Progress Energy, Crystal River, FL
Source/Unit : Unit No. 5
Date: May 22, 2006 RUN NO.: 6
STANDARD TEMP. : 68 F

Front Half Wash (FHW)	0.00070	grams	Vm(std)	51.813	ft3
Mass Filter (MF)	0.00340	grams	Vw(std)	4.378	ft3
Back Half Wash (BHW)	0.00000	grams	Qs(std)	1,535,655	dscfm
Vm(std) SO2		dscf	Bws	0.078	
CO2 CORR. 0.0 %			CO2	10.50	%
O2 CORR.: 0.0 %			O2	5.00	%

F-FACTOR

10E6 x [3.64(%H) + 1.53(%C) + 0.57(%S) + 0.14(%N) - 0.46(%O2)] / (Btu/lb) x [(Tstd + 460)/528] ..... dscf/MMBtu

FUEL USE

Use Rate (gal/ton) * Process Wt. (ton/hr) ..... gal/hr
Heat Input = (Process Weight (ton/hr) x Heating .... MMBtu/hr
Value (Btu/gal) x Fuel Use Rate (gal/ton) / 1E6

TOTAL PARTICULATE

15.432 x (FHW + MF + BHW) / [(Vm(std) + Vw(std)] ...	0.0011	gr/scf
15.432 x (FHW + MF + BHW) / (Vm(std)	0.0012	gr/dscf
gr/dscf x (12 / %CO2)	0.0014	@ 0% CO2
gr/dscf x [(20.9 - Oxygen corr.) / (20.9 - %O2)]	0.0016	@ 0% O2
0.00857 x Qs(std) x gr/dscf	16.07	lb/hr
F-Fac x 1.4286E-4 x [20.9 / (20.9-%O2)] x gr/dscf ..		lb/MMBtu
Particulate (lb/hr) / Heat Input (MMBtu/hr)		lb/MMBtu

TOTAL ACID MIST

[1.0811E-4 x (Vt - Vtb) x N x Vsol] / Vol(aloq) . lb Acid Mist
[Acid Mist (lb) / Vm std (ft^3)] x Qs std x 60 ... lb/hr
[Acid Mist (lb) / Vm std (ft^3)] x F-Factor ..... lb/MMBtu

SULFUR DIOXIDE (SO2)

[7.061E-5 x (Vt - Vtb) x N x Vsol] / Vol(aloq) . lb SO2
[SO2 (lb) / Vm std (ft^3)] x Qs std (ft^3/min) x 60 ... lb/hr
[SO2 (lb) / Vm std (ft^3)] x F ..... lb/MMBtu
[Mass SO2 (lb) x 385 / 64E+6 (ft^3/lb)] / Vm (std) ppm
ppm x 0.0 % Corr. / 11.0 % CO2 in Stack ..... ppm @ 0% CO2
ppm x (20.9% - 0.0% O2 Corr)/(20.9% - 11.0% O2 Stack) ppm @ 0% O2
SO2 (lb/hr / Heat Input) ..... lb/MMBtu

HYDROGEN CHLORIDE DATA SUMMARY

[Mass HCl(mg) x 385 x 1E6] / [453600 x 36.5 x Vm(std)].. ppm
ppm x 0.0 % Corr. / 10.5 % CO2 in Stack ..... ppm @ 0% CO2
ppm x (20.9% - 0.0% O2 Corr)/(20.9% - 10.5% O2 Stack) ppm @ 0% O2
[Mass HCl(mg) x 60 x Qs / (Vm(std) x 453,600)]..... lb/hr

SOURCE TEST CALCULATIONS

Plant : Progress Energy, Crystal River, FL
Source/Unit : Unit No. 5 RUN NO.: 4
Date: May 22, 2006

STD.TEMP, Tstd =	68	F	STATIC PRESS.,Ps =	-0.88	in. H2O
METER TEMP, Tm =	103.4167	F	PITOT COFF., Cp =	0.840	
STACK TEMP, Ts =	296.7	F	STACK I.D. =	308.00	inch
AVG.VEL.HEAD,dP =	1.281	in. H2O	DUCT LENGTH =		inch
METER ORIFICE,dH=	2.53	in. H2O	DUCT WIDTH =		inch
METER VOL., Vm =	55.020	Cu.Ft.	STACK AREA, As =	517.403	Sq.Ft.
METER COFF., Y =	0.998		TEST TIME =	60.00	min.
BAR. PRESS., Pb =	30.12	in.Hg	NOZZLE DIA. =	0.232	inch
COND.(Vlc) =	94.0	ml	NOZZLE DIA., An =	2.9E-04	Sq.Ft.

GAS ANALYSIS =	4.00	% O2	0.00	% CO
	11.00	% CO2	85.00	% N2

Vm(std) = [(T(std) + 460) / 29.92] x Vm x Y x
(Pb + (dH / 13.6)) / (Tm + 460)..... = 52.122 dscf

Vw(std) = (8.9148 x 10e-5) x (Tstd + 460) x Vlc = 4.425 scf

Bws = Vw(std) / (Vm(std) + Vw(std))..... = 0.078 | Lower Bws value used.

Bws @ Saturated Conditions = Vapor Press. of H2O
@ Dew Point Temp. / (Ps, in.Hg.) ..... = 1.000

%EA =(%O2 - 0.5%CO)/(0.264%N2 - (%O2-0.5%CO)) x 100 = 21.69

Md =(.44 x %CO2)+(.32 x %O2)+[.28 x (%N2 + %CO)] = 29.92

Ms = (Md x (1-Bws)) + (18.0 x Bws)..... = 28.99

P(stack) = Pbar + (Ps / 13.6) ..... = 30.06 in. Hg

vs = 85.49 x CP x (Sq.Rt.dP) x [Sq.Rt.(Ts + 460)
/ (Ms x P(stack))] ..... = 75.76 ft/sec

Qs = vs x As x 60 ..... = 2,351,843 acf/min

Qs(std) = Qs x (1-Bws)x((Tstd + 460)/(Ts + 460))
x (P(stack)/29.92) ..... = 1,519,539 dscf/min

I = (Ts+460) x [(0.002669 x Vlc) + (Vm(std) /
(T(std) + 460) / 29.92] x 100 / [Time x
P(stack) x An x vs x 60] ..... = 100.76 %

SOURCE TEST CALCULATIONS

Plant : Progress Energy, Crystal River, FL
Source/Unit : Unit No. 5 RUN NO.: 5
Date : May 22, 2006

STD.TEMP, Tstd =	68	F	STATIC PRESS.,Ps =	-0.88	in. H2O
METER TEMP, Tm =	103.00	F	PITOT COFF., Cp =	0.840	
STACK TEMP, Ts =	295.8	F	STACK I.D. =	308.00	inch
AVG.VEL.HEAD,dP =	1.283	in. H2O	DUCT LENGTH =		inch
METER ORIFICE,dH=	2.53	in. H2O	DUCT WIDTH =		inch
METER VOL., Vm =	54.555	Cu.Ft.	STACK AREA, As =	517.403	Sq.Ft.
METER COFF., Y =	0.998		TEST TIME =	60.00	min.
BAR. PRESS., Pb =	30.12	in.Hg	NOZZLE DIA. =	0.232	inch
COND.(Vlc) =	98.0	ml	NOZZLE DIA., An =	2.9E-04	Sq.Ft.

GAS ANALYSIS =	4.00	% O2	0.00	% CO
	10.50	% CO2	85.50	% N2

Vm(std) = [(T(std) + 460) / 29.92] x Vm x Y x (Pb + (dH / 13.6)) / (Tm + 460)..... = 51.720 dscf

Vw(std) = (8.9148 x 10e-5) x (Tstd + 460) x Vlc = 4.613 scf

Bws = Vw(std) / (Vm(std) + Vw(std))..... = 0.082 | Lower Bws value used.

Bws @ Saturated Conditions = Vapor Press. of H2O @ Dew Point Temp. / (Ps, in.Hg.) ..... = 1.000

%EA =(%O2 - 0.5%CO)/(0.264%N2 - (%O2-0.5%CO)) x 100 = 21.54

Md =(.44 x %CO2)+(.32 x %O2)+[.28 x (%N2 + %CO)] = 29.84

Ms = (Md x (1-Bws)) + (18.0 x Bws)..... = 28.87

P(stack) = Pbar + (Ps / 13.6) ..... = 30.06 in. Hg

vs = 85.49 x CP x (Sq.Rt.dP) x [Sq.Rt.(Ts + 460) / (Ms x P(stack))] ..... = 75.90 ft/sec

Qs = vs x As x 60 ..... = 2,356,341 acf/min

Qs(std) = Qs x (1-Bws)x((Tstd + 460)/(Ts + 460)) x (P(stack)/29.92) ..... = 1,518,273 dscf/min

I = (Ts+460) x [(0.002669 x Vlc) + (Vm(std) / (T(std) + 460) / 29.92] x 100 / [Time x P(stack) x An x vs x 60] ..... = 100.07 %

SOURCE TEST CALCULATIONS

Plant : Progress Energy, Crystal River, FL
Source/Unit : Unit No. 5 RUN NO.: 6
Date : May 22, 2006

STD.TEMP, Tstd =	68	F	STATIC PRESS.,Ps =	-0.88	in. H2O
METER TEMP, Tm =	102.67	F	PITOT COFF., Cp =	0.840	
STACK TEMP, Ts =	296.7	F	STACK I.D. =	308.00	inch
AVG.VEL.HEAD,dP =	1.306	in. H2O	DUCT LENGTH =		inch
METER ORIFICE,dH=	2.58	in. H2O	DUCT WIDTH =		inch
METER VOL., Vm =	54.615	Cu.Ft.	STACK AREA, As =	517.403	Sq.Ft.
METER COFF., Y =	0.998		TEST TIME =	60.00	min.
BAR. PRESS., Pb =	30.12	in.Hg	NOZZLE DIA. =	0.232	inch
COND.(Vlc) =	93.0	ml	NOZZLE DIA., An =	2.9E-04	Sq.Ft.

GAS ANALYSIS =	5.00	% O2	0.00	% CO
	10.50	% CO2	84.50	% N2

Vm(std) = [(T(std) + 460) / 29.92] x Vm x Y x (Pb + (dH / 13.6)) / (Tm + 460)..... = 51.813 dscf

Vw(std) = (8.9148 x 10e-5) x (Tstd + 460) x Vlc = 4.378 scf

Bws = Vw(std) / (Vm(std) + Vw(std))..... = 0.078 | Lower Bws value used.

Bws @ Saturated Conditions = Vapor Press. of H2O @ Dew Point Temp. / (Ps, in.Hg.) ..... = 1.000

%EA =(%O2 - 0.5%CO)/(0.264%N2 - (%O2-0.5%CO)) x 100 = 28.89

Md =(.44 x %CO2)+(.32 x %O2)+[.28 x (%N2 + %CO)] = 29.88

Ms = (Md x (1-Bws)) + (18.0 x Bws)..... = 28.95

P(stack) = Pbar + (Ps / 13.6) ..... = 30.06 in. Hg

vs = 85.49 x CP x (Sq.Rt.dP) x [Sq.Rt.(Ts + 460) / (Ms x P(stack))] ..... = 76.53 ft/sec

Qs = vs x As x 60 ..... = 2,375,904 acf/min

Qs(std) = Qs x (1-Bws)x((Tstd + 460)/(Ts + 460)) x (P(stack)/29.92) ..... = 1,535,655 dscf/min

I = (Ts+460) x [(0.002669 x Vlc) + (Vm(std) / (T(std) + 460) / 29.92] x 100 / [Time x P(stack) x An x vs x 60] ..... = 99.12 %

Carbon Monoxide

KOOGLER & ASSOCIATES, INC.
ENVIRONMENTAL SERVICES

EPA Protocol Gas Analyzer Calibration Data
CO Concentration Instrument Range Setting (0 - 200 ppm CO)
EPA Method 10

Calibration Gas	Conc. (ppmv)	Run No.	Date/Time	Response through Train System Loop (ppmv)	Drift (% of Range)(1)	Accuracy Diff. from Actual (% of Range)(2)
Zero	0.0	R1-Pre	5/22/2006 11:14	-0.75		-0.38
Zero	0.0	R1-Post	5/22/2006 12:27	-0.88	-0.06	-0.44
CO	195.0	R1-Pre	5/22/2006 10:51	194.6		-0.21
CO	99.1	R1-Pre	5/22/2006 10:59	97.2		-0.97
CO	50.2	R1-Pre	5/22/2006 11:04	50.3		0.04
CO	50.2	R1-Post	5/22/2006 12:34	49.5	-0.38	-0.34
Zero	0.0	R2-Pre	5/22/2006 12:27	-0.88		-0.44
Zero	0.0	R2-Post	5/22/2006 13:51	-2.01	-0.56	-1.00
CO	50.2	R2-Pre	5/22/2006 11:04	49.5		-0.34
CO	50.2	R2-Post	5/22/2006 13:59	48.6	-0.44	-0.78
Zero	0.0	R3-Pre	5/22/2006 13:51	-2.01		-1.00
Zero	0.0	R3-Post	5/22/2006 15:16	-1.00	0.50	-0.50
CO	50.2	R3-Pre	5/22/2006 13:59	48.6		-0.78
CO	50.2	R3-Post	5/22/2006 15:23	49.1	0.25	-0.53
Zero	0.0	R4-Pre	5/22/2006 15:16	-1.00		0.00
Zero	0.0	R4-Post	5/22/2006 16:38	-1.50	-0.25	-0.75
CO	50.2	R4-Pre	5/22/2006 15:23	49.1		-0.53
CO	50.2	R4-Post	5/22/2006 16:46	49.3	0.06	-0.46
Zero	0.0	R5-Pre	5/22/2006 15:23	-1.50		-0.75
Zero	0.0	R5-Post	5/22/2006 18:01	-2.01	-0.25	-1.00
CO	50.2	R5-Pre	5/22/2006 15:23	49.3		-0.46
CO	50.2	R5-Post	5/22/2006 18:09	48.9	-0.19	-0.65
Zero	0.0	R6-Pre	5/22/2006 18:01	-2.01		-1.00
Zero	0.0	R6-Post	5/22/2006 19:25	0.13	1.07	0.06
CO	50.2	R6-Pre	5/22/2006 18:09	48.9		-0.65
CO	50.2	R6-Post	5/22/2006 19:30	51.0	1.07	0.41
		Drift For The 6-Run Test Period				
Zero	0.0	R1-Pre*	5/22/2006 11:14	-0.75		-0.38
Zero	0.0	R6-Post	5/22/2006 19:25	0.13	0.44	0.06
CO	50.2	R1-Pre*	5/22/2006 11:04	50.3		0.04
CO	50.2	R6-Post	5/22/2006 19:30	51.0	0.38	0.41

Method 10 Performance Specification

Section 6.1 Span = 1.5 x Emission Standard

Cal. Gas ppm	% of Range
195.0	97.50
99.1	49.55
50.2	25.10

Instrument Range Setting (0 - 1200 ppm CO)

(1) Addenda A, Maximum 10 % of Range per 8 Hours
(2) Addenda A, Maximum 2% 0f Range

Linearity ; Method 10, Addenda, B 13

	Response	Actual
zero	-0.75	0.0
Span	194.6	195.0
slope	1.002	=m
y-int	-0.752	=b
R^2	1.000	
	certified conc.	=x
	predicted conc.	=Y

y=m(x)+b

49.53	predicted mid	pre-R1
98.5	predicted low	pre-R1

Mid gas Differences M10, Addenda A

-0.37	mid% dif	pre-R1
0.68	low %dif	pre-R1

Progress Energy , Crystal River Complex
No. 5 FFSG , EU 003
PRB Fuel Burn Trials

Date Time	CO ppmv		
5/22/2006 10:30	3.0		
5/22/2006 10:31	3.3		
5/22/2006 10:32	2.8		
5/22/2006 10:33	3.0		
5/22/2006 10:34	3.8		
5/22/2006 10:35	2.8		
5/22/2006 10:36	3.5		
5/22/2006 10:37	4.3		
5/22/2006 10:38	3.0		
5/22/2006 10:39	1.0		
5/22/2006 10:40	1.0	<<Zero air	
5/22/2006 10:41	1.0	1.0	<average
5/22/2006 10:42	1.0		
5/22/2006 10:43	1.8		
5/22/2006 10:44	64.9		
5/22/2006 10:45	139.4		
5/22/2006 10:46	167.5		
5/22/2006 10:47	182.5		
5/22/2006 10:48	189.8		
5/22/2006 10:49	194.3		
5/22/2006 10:50	193.8		
5/22/2006 10:51	194.8	<<195 ppm CO	
5/22/2006 10:52	194.3	194.6	<average
5/22/2006 10:53	184.6		
5/22/2006 10:54	135.4		
5/22/2006 10:55	108.3		
5/22/2006 10:56	100.8		
5/22/2006 10:57	98.0		
5/22/2006 10:58	97.5		
5/22/2006 10:59	97.3	<<99.1ppm CO	
5/22/2006 11:00	97.0	97.2	<average
5/22/2006 11:01	93.8		
5/22/2006 11:02	69.5		
5/22/2006 11:03	54.4		
5/22/2006 11:04	50.4	<<50.2 ppm CO	
5/22/2006 11:05	50.2	50.3	<average
5/22/2006 11:06	49.6		
5/22/2006 11:07	48.9		
5/22/2006 11:08	40.4		
5/22/2006 11:09	8.5		
5/22/2006 11:10	1.0		
5/22/2006 11:11	0.0		
5/22/2006 11:12	-0.8		
5/22/2006 11:13	-1.0		
5/22/2006 11:14	-0.8	<<Zero air	
5/22/2006 11:15	-0.8	-0.8	<average
5/22/2006 11:16	6.0		

5/22/2006 11:17	15.3	
5/22/2006 11:18	31.1	
5/22/2006 11:19	40.4	<< Start Run 1
5/22/2006 11:20	31.8	
5/22/2006 11:21	16.6	
5/22/2006 11:22	13.3	
5/22/2006 11:23	17.1	
5/22/2006 11:24	15.3	
5/22/2006 11:25	9.3	
5/22/2006 11:26	29.6	
5/22/2006 11:27	20.1	
5/22/2006 11:28	8.8	
5/22/2006 11:29	7.3	
5/22/2006 11:30	36.4	
5/22/2006 11:31	32.3	
5/22/2006 11:32	29.8	
5/22/2006 11:33	26.1	
5/22/2006 11:34	27.6	
5/22/2006 11:35	34.1	
5/22/2006 11:36	39.9	
5/22/2006 11:37	29.3	
5/22/2006 11:38	20.6	
5/22/2006 11:39	13.3	
5/22/2006 11:40	14.8	
5/22/2006 11:41	31.3	
5/22/2006 11:42	26.8	
5/22/2006 11:43	17.3	
5/22/2006 11:44	20.6	
5/22/2006 11:45	16.3	
5/22/2006 11:46	19.3	
5/22/2006 11:47	28.8	
5/22/2006 11:48	42.1	
5/22/2006 11:49	31.1	
5/22/2006 11:50	16.3	
5/22/2006 11:51	23.3	
5/22/2006 11:52	38.6	
5/22/2006 11:53	29.3	
5/22/2006 11:54	17.3	
5/22/2006 11:55	17.1	
5/22/2006 11:56	20.8	
5/22/2006 11:57	30.8	
5/22/2006 11:58	25.6	
5/22/2006 11:59	35.4	
5/22/2006 12:00	50.9	
5/22/2006 12:01	84.0	
5/22/2006 12:02	74.2	
5/22/2006 12:03	83.8	
5/22/2006 12:04	62.7	
5/22/2006 12:05	46.6	
5/22/2006 12:06	33.9	
5/22/2006 12:07	34.9	
5/22/2006 12:08	37.1	

5/22/2006 12:09	29.8			
5/22/2006 12:10	24.3			
5/22/2006 12:11	14.8			
5/22/2006 12:12	14.0			
5/22/2006 12:13	14.5			
5/22/2006 12:14	11.3			
5/22/2006 12:15	22.6			
5/22/2006 12:16	19.1			
5/22/2006 12:17	28.8			
5/22/2006 12:18	32.3		Run 1 CO ppm	
5/22/2006 12:19	33.1	<< End Run 1	28.8	Average
5/22/2006 12:20	35.4			
5/22/2006 12:21	42.1			
5/22/2006 12:22	23.8			
5/22/2006 12:23	5.8			
5/22/2006 12:24	1.5			
5/22/2006 12:25	-0.3			
5/22/2006 12:26	-1.0			
5/22/2006 12:27	-1.3	<<Zero air		
5/22/2006 12:28	-0.5	-0.9	<average	
5/22/2006 12:29	22.3			
5/22/2006 12:30	37.9			
5/22/2006 12:31	44.1			
5/22/2006 12:32	48.9			
5/22/2006 12:33	48.1			
5/22/2006 12:34	49.4	<<50.2 ppm CO		
5/22/2006 12:35	49.6	49.5	<average	
5/22/2006 12:36	49.4			
5/22/2006 12:37	49.9			

Progress Energy , Crystal River Complex
No. 5 FFSG , EU 003
PRB Fuel Burn Trials

Date Time	CO ppmv	
5/22/2006 12:45	85.0	<< Start Run 2
5/22/2006 12:46	90.8	
5/22/2006 12:47	82.5	
5/22/2006 12:48	72.7	
5/22/2006 12:49	70.2	
5/22/2006 12:50	95.3	
5/22/2006 12:51	113.6	
5/22/2006 12:52	99.5	
5/22/2006 12:53	82.7	
5/22/2006 12:54	64.2	
5/22/2006 12:55	74.2	
5/22/2006 12:56	47.4	
5/22/2006 12:57	22.1	
5/22/2006 12:58	12.8	
5/22/2006 12:59	14.0	
5/22/2006 13:00	24.1	
5/22/2006 13:01	22.8	
5/22/2006 13:02	70.5	
5/22/2006 13:03	97.0	
5/22/2006 13:04	66.2	
5/22/2006 13:05	60.2	
5/22/2006 13:06	66.4	
5/22/2006 13:07	77.2	
5/22/2006 13:08	82.0	
5/22/2006 13:09	63.4	
5/22/2006 13:10	50.4	
5/22/2006 13:11	37.1	
5/22/2006 13:12	53.7	
5/22/2006 13:13	50.4	
5/22/2006 13:14	39.9	
5/22/2006 13:15	64.9	
5/22/2006 13:16	77.7	
5/22/2006 13:17	86.0	
5/22/2006 13:18	78.7	
5/22/2006 13:19	74.0	
5/22/2006 13:20	48.9	
5/22/2006 13:21	34.4	
5/22/2006 13:22	31.3	
5/22/2006 13:23	31.6	
5/22/2006 13:24	36.6	
5/22/2006 13:25	39.4	
5/22/2006 13:26	42.1	
5/22/2006 13:27	27.3	
5/22/2006 13:28	13.5	
5/22/2006 13:29	10.8	
5/22/2006 13:30	6.8	
5/22/2006 13:31	53.2	

5/22/2006 13:32	52.9			
5/22/2006 13:33	84.5			
5/22/2006 13:34	97.8			
5/22/2006 13:35	57.7			
5/22/2006 13:36	40.1			
5/22/2006 13:37	73.7			
5/22/2006 13:38	48.6			
5/22/2006 13:39	29.8			
5/22/2006 13:40	60.7			
5/22/2006 13:41	57.2			
5/22/2006 13:42	37.4			
5/22/2006 13:43	37.6			
5/22/2006 13:44	55.2		Run 2 CO ppm	
5/22/2006 13:45	88.8	<< End Run 2	56.8	Average
5/22/2006 13:46	54.7			
5/22/2006 13:47	15.3			
5/22/2006 13:48	5.0			
5/22/2006 13:49	0.0			
5/22/2006 13:50	-1.0			
5/22/2006 13:51	-1.8	<<Zero air		
5/22/2006 13:52	-2.3	-2.0	<average	
5/22/2006 13:53	7.3			
5/22/2006 13:54	32.3			
5/22/2006 13:55	40.6			
5/22/2006 13:56	44.4			
5/22/2006 13:57	46.4			
5/22/2006 13:58	48.1			
5/22/2006 13:59	48.9	<<50.2 ppm CO		
5/22/2006 14:00	48.4	48.6	<average	

Progress Energy , Crystal River Complex
No. 5 FFSG , EU 003
PRB Fuel Burn Trials

Date Time	CO ppmv	
5/22/2006 14:09	12.5	<< Start Run 3
5/22/2006 14:10	16.3	
5/22/2006 14:11	20.1	
5/22/2006 14:12	12.0	
5/22/2006 14:13	9.0	
5/22/2006 14:14	8.8	
5/22/2006 14:15	16.3	
5/22/2006 14:16	17.3	
5/22/2006 14:17	57.2	
5/22/2006 14:18	35.6	
5/22/2006 14:19	20.6	
5/22/2006 14:20	28.6	
5/22/2006 14:21	37.9	
5/22/2006 14:22	31.8	
5/22/2006 14:23	27.1	
5/22/2006 14:24	30.8	
5/22/2006 14:25	34.9	
5/22/2006 14:26	29.1	
5/22/2006 14:27	35.9	
5/22/2006 14:28	52.4	
5/22/2006 14:29	39.1	
5/22/2006 14:30	29.6	
5/22/2006 14:31	24.3	
5/22/2006 14:32	17.6	
5/22/2006 14:33	29.6	
5/22/2006 14:34	34.9	
5/22/2006 14:35	21.8	
5/22/2006 14:36	45.6	
5/22/2006 14:37	53.9	
5/22/2006 14:38	58.7	
5/22/2006 14:39	36.1	
5/22/2006 14:40	32.6	
5/22/2006 14:41	33.4	
5/22/2006 14:42	18.8	
5/22/2006 14:43	8.0	
5/22/2006 14:44	13.5	
5/22/2006 14:45	25.8	
5/22/2006 14:46	30.6	
5/22/2006 14:47	24.8	
5/22/2006 14:48	24.1	
5/22/2006 14:49	38.6	
5/22/2006 14:50	36.9	
5/22/2006 14:51	23.6	
5/22/2006 14:52	29.8	
5/22/2006 14:53	30.1	
5/22/2006 14:54	32.1	
5/22/2006 14:55	46.4	

5/22/2006 14:56	48.6			
5/22/2006 14:57	36.1			
5/22/2006 14:58	35.6			
5/22/2006 14:59	28.6			
5/22/2006 15:00	31.6			
5/22/2006 15:01	31.6			
5/22/2006 15:02	42.1			
5/22/2006 15:03	46.1			
5/22/2006 15:04	49.6			
5/22/2006 15:05	51.4			
5/22/2006 15:06	57.7			
5/22/2006 15:07	36.6			
5/22/2006 15:08	25.3		Run 3 CO ppm	
5/22/2006 15:09	25.1	<< End Run 3	31.5	Average
5/22/2006 15:10	54.9			
5/22/2006 15:11	55.4			
5/22/2006 15:12	17.6			
5/22/2006 15:13	3.5			
5/22/2006 15:14	0.8			
5/22/2006 15:15	-0.5			
5/22/2006 15:16	-1.3	<<Zero air		
5/22/2006 15:17	-0.8	-1.0	<average	
5/22/2006 15:18	12.3			
5/22/2006 15:19	38.9			
5/22/2006 15:20	44.9			
5/22/2006 15:21	46.4			
5/22/2006 15:22	47.6			
5/22/2006 15:23	48.9	<<50.2 ppm CO		
5/22/2006 15:24	49.4	49.1	<average	
5/22/2006 15:25	48.6			

Progress Energy , Crystal River Complex
No. 5 FFSG , EU 003
PRB Fuel Burn Trials

Date Time	CO ppmv	
5/22/2006 15:34	43.1	<< Start Run 4
5/22/2006 15:35	55.2	
5/22/2006 15:36	67.0	
5/22/2006 15:37	83.8	
5/22/2006 15:38	81.0	
5/22/2006 15:39	83.5	
5/22/2006 15:40	77.7	
5/22/2006 15:41	45.4	
5/22/2006 15:42	16.8	
5/22/2006 15:43	8.5	
5/22/2006 15:44	2.5	
5/22/2006 15:45	-0.8	
5/22/2006 15:46	0.5	
5/22/2006 15:47	5.3	
5/22/2006 15:48	6.3	
5/22/2006 15:49	19.3	
5/22/2006 15:50	27.8	
5/22/2006 15:51	20.8	
5/22/2006 15:52	10.0	
5/22/2006 15:53	6.8	
5/22/2006 15:54	9.3	
5/22/2006 15:55	9.8	
5/22/2006 15:56	4.5	
5/22/2006 15:57	7.3	
5/22/2006 15:58	13.8	
5/22/2006 15:59	12.0	
5/22/2006 16:00	16.6	
5/22/2006 16:01	19.8	
5/22/2006 16:02	29.3	
5/22/2006 16:03	25.8	
5/22/2006 16:04	18.1	
5/22/2006 16:05	33.9	
5/22/2006 16:06	38.4	
5/22/2006 16:07	58.4	
5/22/2006 16:08	45.6	
5/22/2006 16:09	37.6	
5/22/2006 16:10	39.4	
5/22/2006 16:11	59.7	
5/22/2006 16:12	42.9	
5/22/2006 16:13	35.9	
5/22/2006 16:14	19.6	
5/22/2006 16:15	21.8	
5/22/2006 16:16	33.4	
5/22/2006 16:17	59.4	
5/22/2006 16:18	61.4	
5/22/2006 16:19	49.9	
5/22/2006 16:20	59.7	

5/22/2006 16:21	73.0				
5/22/2006 16:22	70.2				
5/22/2006 16:23	54.9				
5/22/2006 16:24	23.6				
5/22/2006 16:25	12.5				
5/22/2006 16:26	9.0				
5/22/2006 16:27	9.0				
5/22/2006 16:28	10.8				
5/22/2006 16:29	14.3				
5/22/2006 16:30	29.6				
5/22/2006 16:31	26.1				
5/22/2006 16:32	25.1				
5/22/2006 16:33	24.6			Run 4 CO ppm	
5/22/2006 16:34	20.8	<< End Run 4		31.6	Average
5/22/2006 16:35	16.3				
5/22/2006 16:36	18.8				
5/22/2006 16:37	5.0				
5/22/2006 16:38	-0.3	<<Zero air			
5/22/2006 16:39	-2.8	-1.5	<average		
5/22/2006 16:40	-0.3				
5/22/2006 16:41	-0.5				
5/22/2006 16:42	6.0				
5/22/2006 16:43	33.9				
5/22/2006 16:44	44.6				
5/22/2006 16:45	47.6				
5/22/2006 16:46	49.1	<<50.2 ppm CO			
5/22/2006 16:47	49.4	49.3	<average		
5/22/2006 16:48	49.4				

Progress Energy , Crystal River Complex
No. 5 FFSG , EU 003
PRB Fuel Burn Trials

Date Time	CO ppmv	
5/22/2006 16:57	29.3	<< Start Run 5
5/22/2006 16:58	21.3	
5/22/2006 16:59	13.3	
5/22/2006 17:00	11.0	
5/22/2006 17:01	13.5	
5/22/2006 17:02	14.3	
5/22/2006 17:03	19.6	
5/22/2006 17:04	39.1	
5/22/2006 17:05	40.9	
5/22/2006 17:06	47.4	
5/22/2006 17:07	34.1	
5/22/2006 17:08	15.0	
5/22/2006 17:09	17.3	
5/22/2006 17:10	21.6	
5/22/2006 17:11	17.3	
5/22/2006 17:12	13.8	
5/22/2006 17:13	13.5	
5/22/2006 17:14	19.6	
5/22/2006 17:15	24.8	
5/22/2006 17:16	34.9	
5/22/2006 17:17	22.6	
5/22/2006 17:18	29.6	
5/22/2006 17:19	37.6	
5/22/2006 17:20	31.1	
5/22/2006 17:21	18.3	
5/22/2006 17:22	9.0	
5/22/2006 17:23	7.8	
5/22/2006 17:24	16.6	
5/22/2006 17:25	24.1	
5/22/2006 17:26	20.8	
5/22/2006 17:27	13.0	
5/22/2006 17:28	23.6	
5/22/2006 17:29	11.3	
5/22/2006 17:30	11.5	
5/22/2006 17:31	13.0	
5/22/2006 17:32	20.6	
5/22/2006 17:33	21.3	
5/22/2006 17:34	63.7	
5/22/2006 17:35	34.4	
5/22/2006 17:36	19.1	
5/22/2006 17:37	19.6	
5/22/2006 17:38	12.3	
5/22/2006 17:39	17.3	
5/22/2006 17:40	19.3	
5/22/2006 17:41	18.8	
5/22/2006 17:42	10.5	
5/22/2006 17:43	25.1	

5/22/2006 17:44	50.4			
5/22/2006 17:45	55.7			
5/22/2006 17:46	46.6			
5/22/2006 17:47	34.9			
5/22/2006 17:48	28.6			
5/22/2006 17:49	20.3			
5/22/2006 17:50	16.6			
5/22/2006 17:51	25.3			
5/22/2006 17:52	31.8			
5/22/2006 17:53	43.4			
5/22/2006 17:54	25.1			
5/22/2006 17:55	12.5			
5/22/2006 17:56	18.1		Run 5 CO ppm	
5/22/2006 17:57	27.8	<< End Run 5	24.1	Average
5/22/2006 17:58	14.5			
5/22/2006 17:59	12.5			
5/22/2006 18:00	3.5			
5/22/2006 18:01	-2.0	<<Zero air		
5/22/2006 18:02	-2.0	-2.0	<average	
5/22/2006 18:03	-1.5			
5/22/2006 18:04	-0.8			
5/22/2006 18:05	25.1			
5/22/2006 18:06	42.6			
5/22/2006 18:07	46.9			
5/22/2006 18:08	47.1			
5/22/2006 18:09	49.4	<<50.2 ppm CO		
5/22/2006 18:10	48.4	48.9	<average	
5/22/2006 18:11	50.2			
5/22/2006 18:12	48.4			

Progress Energy , Crystal River Complex
No. 5 FFSG , EU 003
PRB Fuel Burn Trials

Date Time	CO ppmv	
5/22/2006 18:18	11.8	<< Start Run 6
5/22/2006 18:19	11.3	
5/22/2006 18:20	19.3	
5/22/2006 18:21	18.3	
5/22/2006 18:22	12.3	
5/22/2006 18:23	13.0	
5/22/2006 18:24	7.0	
5/22/2006 18:25	7.0	
5/22/2006 18:26	9.0	
5/22/2006 18:27	6.8	
5/22/2006 18:28	15.0	
5/22/2006 18:29	22.3	
5/22/2006 18:30	15.8	
5/22/2006 18:31	12.3	
5/22/2006 18:32	11.8	
5/22/2006 18:33	17.1	
5/22/2006 18:34	21.3	
5/22/2006 18:35	12.3	
5/22/2006 18:36	10.5	
5/22/2006 18:37	9.3	
5/22/2006 18:38	11.5	
5/22/2006 18:39	16.0	
5/22/2006 18:40	31.6	
5/22/2006 18:41	26.6	
5/22/2006 18:42	35.4	
5/22/2006 18:43	51.4	
5/22/2006 18:44	38.9	
5/22/2006 18:45	35.6	
5/22/2006 18:46	22.8	
5/22/2006 18:47	35.6	
5/22/2006 18:48	22.1	
5/22/2006 18:49	10.3	
5/22/2006 18:50	9.8	
5/22/2006 18:51	5.5	
5/22/2006 18:52	3.5	
5/22/2006 18:53	2.5	
5/22/2006 18:54	3.8	
5/22/2006 18:55	8.0	
5/22/2006 18:56	27.8	
5/22/2006 18:57	26.1	
5/22/2006 18:58	21.3	
5/22/2006 18:59	21.3	
5/22/2006 19:00	20.3	
5/22/2006 19:01	20.1	
5/22/2006 19:02	30.6	
5/22/2006 19:03	19.8	
5/22/2006 19:04	12.0	

5/22/2006 19:05	7.5			
5/22/2006 19:06	4.3			
5/22/2006 19:07	19.1			
5/22/2006 19:08	45.9			
5/22/2006 19:09	32.3			
5/22/2006 19:10	20.1			
5/22/2006 19:11	19.8			
5/22/2006 19:12	17.3			
5/22/2006 19:13	12.0			
5/22/2006 19:14	17.6			
5/22/2006 19:15	13.0			
5/22/2006 19:16	14.0			
5/22/2006 19:17	20.3		Run 6 CO ppm	
5/22/2006 19:18	16.6	<< End Run 6	17.9	Average
5/22/2006 19:19	21.6			
5/22/2006 19:20	15.8			
5/22/2006 19:21	5.8			
5/22/2006 19:22	2.3			
5/22/2006 19:23	0.3			
5/22/2006 19:24	0.8			
5/22/2006 19:25	0.0	<<Zero air		
5/22/2006 19:26	0.3	0.1	<average	
5/22/2006 19:27	16.8			
5/22/2006 19:28	41.6			
5/22/2006 19:29	48.4			
5/22/2006 19:30	49.9	<<50.2 ppm CO		
5/22/2006 19:31	52.2	51.0	<average	
5/22/2006 19:32	51.4			

Field and Laboratory Data Sheets

KOOGLER & ASSOCIATES, INC.
ENVIRONMENTAL SERVICES

Particulate Matter

KOOGLER & ASSOCIATES, INC.
ENVIRONMENTAL SERVICES

Multiple Methods Data Sheet

Plant: Progress Energy - Crystal River
Sample Location: Unit 5
Control Type: ESP
Sample Type: ~~5-22-06~~ Part
Date: 5-22-06 | Run No.: 1
Time Start: 1118 | Time End: 1230
Sample Time: 5 | min/point 60 | Total Mins.
Dry Bulb: °F | Wet Bulb: °F | VP@DP:
Bar. Pres: 30.12 "Hg | Stack Pres: 30.06 "Hg | Ps: -0.88 "H_2O
Moisture: 8 % | FDA: | Gas Density Factor:
Temp: 80 °F | Wind Direction: — | Wind Speed: —
Weather: Cloudy | Thermocouple Readout: KAK-8
Sample Box No.: KA-8 | Meter Box No.: KA-8
Meter Y: 0.998 @ | Delta H: 1.69 | Pitot Corr.: 0.84
Nozzle Diameter: 0.232 inches | Probe Length: 9.21 feet
Probe Heater Setting: 320°F | Nomograph Cf: 1.89
Stack Dimensions: 308 inches
Stack Area: 517.4 ft^2
Effective Stack Area: 517.4 ft^2
Stack Height: ft

Stack Dimensions

Umbilical: KAK-100
Thermocouple Probe No. KAK-110
Pitot Tube: KA-55I

Material Processing Rate:
Final Gas Meter Reading: 967.230 ft^3
Initial Gas Meter Reading: 916.902 ft^3
Total Metered Gas Volume: 50.328 ft^3
Condensate Gain in Impingers: 65 mL
Weight Gain in Silica Gel: 10 g
Total Moisture Gain: 75 mL
Silica Gel Container No.: 39
Filter Number: 1

Leak Check - Meter Box:
Initial: 0.003 cfm @ 15 inches Hg
Final: 0.001 cfm @ 6 inches Hg

Leak Check - Pitot Tubes:
Impact 3 "H_2O for 15 sec. Stable / Leak
Static 3 "H_2O for 15 sec. Stable / Leak

Test Conducted By: R Paul - A West
O_2: 13.0 % | CO_2: 6.5 %
Stack Test Observers:

Port and Traverse Point No.	Distance from Inside Stack Wall (in.)	Clock Time	Gas Meter Reading (ft^3)	Stack Velocity Head (H_2O)	Meter Orifice Pressure Difference (H_2O) Calculated	Meter Orifice Pressure Difference (H_2O) Actual	Stack Gas Temp (°F)	Sample Box Temp (°F)	Last Impinger Temp (°F)	Meter Temp (°F)	Vacuum on Sample Train ("Hg)	Oxygen Meter Reading (%O_2)
1-1			16.9	1.4	2.65	2.65	295		68	86	6	
2			21.3	1.1	2.08	2.08	294		62	86	5	
3			25.4	1.0	1.89	1.89	295		64	86	5	
2-1			29.3	1.3	2.46	2.46	293		67	88	6	
2			33.5	1.3	2.46	2.46	294		60	88	6	
3			37.9	0.97	1.83	1.83	294		61	90	5	
3-1			41.8	1.2	2.27	2.27	295		65	92	6	
2			46.0	1.2	2.27	2.27	295		58	93	6	

KOOGLER & ASSOCIATES, INC.
ENVIRONMENTAL SERVICES

Port and Traverse Point No.	Distance from Inside Stack Wall (in.)	Clock Time	Gas Meter Reading (ft^3)	Stack Velocity Head (H_2O)	Meter Orifice Pressure Difference (H_2O)		Stack Gas Temp (°F)	Sample Box Temp (°F)	Last Impinger Temp (°F)	Meter Temp (°F)	Vacuum on Sample Train ("Hg)	Oxygen Meter Reading (%O2)
					Calculated	Actual						
3-3			50.1	1.2	2.27	2.27	297		59	94	6	
4-1			54.2	1.3	2.46	2.46	295		64	95	6	
2			58.6	1.3	2.46	2.46	295		61	96	6	
3			63.0	1.2	2.27	2.27	294		63	96	6	

KOOGLER & ASSOCIATES, INC.
ENVIRONMENTAL SERVICES

Multiple Methods Data Sheet

Plant: Progress Energy-Crystal River
Sample Location: Unit 5
Control Type: ESP
Sample Type: Part
Date: 5-22-06 | Run No.: 2
Time Start: 1245 | Time End: 1352
Sample Time: 5 | min/point 60 | Total Mins.
Dry Bulb: °F | Wet Bulb: °F | VP@DP:
Bar. Pres: 30.12 "Hg | Stack Pres: 30.06 "Hg | Ps: -0.88 "H_2O
Moisture: 8 % | FDA: | Gas Density Factor:
Temp: 85 °F | Wind Direction: — | Wind Speed: —
Weather: cldy | Thermocouple Readout: KAK-8
Sample Box No.: KA-8 | Meter Box No.: KA-8
Meter Y: 0.998 @ | Delta H: 1.69 | Pitot Corr.: 0.84
Nozzle Diameter: 0.232 inches | Probe Length: 9.2 feet
Probe Heater Setting: 320° | Nomograph Cf: 1.89
Stack Dimensions: 308 inches
Stack Area: 517.4 ft^2
Effective Stack Area: 517.4 ft^2
Stack Height: ft

Stack Dimensions

Umbilical: KAK-100
Thermocouple Probe No. KAK-10
Pitot Tube: KA-SSI

Material Processing Rate:
Final Gas Meter Reading: 1020.300 ft^3
Initial Gas Meter Reading: 967.500 ft^3
Total Metered Gas Volume: 52.800 ft^3
Condensate Gain in Impingers: 74 mL
Weight Gain in Silica Gel: 11 g
Total Moisture Gain: 85 mL
Silica Gel Container No.: 25
Filter Number: 2

Leak Check - Meter Box:
Initial: 0.004 cfm @ 19 inches Hg
Final: 0.003 cfm @ 9 inches Hg

Leak Check - Pitot Tubes:
Impact 3 "H_2O for 15 sec: Stable, Leak
Static 3 "H_2O for 15 sec: Stable, Leak

Test Conducted By: R Paul-A West
O_2: 8.5 % | CO_2: 8.0 %
Stack Test Observers:

Port and Traverse Point No.	Distance from Inside Stack Wall (in.)	Clock Time	Gas Meter Reading (ft^3)	Stack Velocity Head (H_2O)	Meter Orifice Pressure Difference (H_2O) Calculated	Actual	Stack Gas Temp (°F)	Sample Box Temp (°F)	Last Impinger Temp (°F)	Meter Temp (°F)	Vacuum on Sample Train ("Hg)	Oxygen Meter Reading (%O_2)
1-1			67.5	1.2	2.27	2.27	293		72	98	6	
2			71.7	1.3	2.46	2.46	295		68	98	6	
3			76.2	1.3	2.46	2.46	295		66	98	6	
2-1			80.5	1.3	2.46	2.46	295		69	99	6	
2			84.9	1.3	2.46	2.46	296		66	99	6	
3			89.4	0.97	1.83	1.83	295		64	99	6	
3-1			93.3	1.2	2.36	2.36	294		65	99	6	
2			97.7	1.3	2.56	2.56	296		62	100	7	

CF 1.97

KOOGLER & ASSOCIATES, INC
ENVIRONMENTAL SERVICES

Port and Traverse Point No.	Distance from Inside Stack Wall (in.)	Clock Time	Gas Meter Reading (ft^3)	Stack Velocity Head (H_2O)	Meter Orifice Pressure Difference (H_2O)		Stack Gas Temp (°F)	Sample Box Temp (°F)	Last Impinger Temp (°F)	Meter Temp (°F)	Vacuum on Sample Train ("Hg)	Oxygen Meter Reading (%O2)
					Calculated	Actual						
3-3			1002.3	1.1	2.16	2.16	295		61	101	7	
4-1			6.6	1.3	2.56	2.56	295		63	101	7	
2			11.1	1.3	2.56	2.56	297		60	101	7	
3			15.6	1.2	2.36	2.36	295		61	101	7	

KOOGLER & ASSOCIATES, INC.
ENVIRONMENTAL SERVICES

Multiple Methods Data Sheet

Plant: Progress Energy - Crystal River
Sample Location: Unit 5
Control Type: ESP
Sample Type: Part
Date: 5-22-06 | Run No.: 3
Time Start: 1409 | Time End: 1517
Sample Time: 5 | min/point 60 Total Mins.
Dry Bulb: °F | Wet Bulb: °F | VP@DP:
Bar. Pres: 30.12 "Hg | Stack Pres: 30.06 "Hg | Ps: -0.88 "H_2O
Moisture: 7 % | FDA: | Gas Density Factor:
Temp: 88 °F | Wind Direction: — | Wind Speed: —
Weather: Cldy | Thermocouple Readout: KAK-8
Sample Box No. KA-8 | Meter Box No.: KA-8
Meter Y: 0.998 @ | Delta H: 1.69 | Pitot Corr.: 0.84
Nozzle Diameter: 0.232 inches | Probe Length: 9.22 feet
Probe Heater Setting: 320 | Nomograph Cf: 1.97
Stack Dimensions: 308 inches
Stack Area: 517.4 ft^2
Effective Stack Area: 517.4 ft^2
Stack Height: ft

Stack Dimensions

Umbilical: KAK-100
Thermocouple Probe No. KAK-10
Pitot Tube: KA SSI

Material Processing Rate:
Final Gas Meter Reading: 74.616 ft^3
Initial Gas Meter Reading: 20.500 ft^3
Total Metered Gas Volume: 54.116 ft^3
Condensate Gain in Impingers: 72 mL
Weight Gain in Silica Gel: 12 g
Total Moisture Gain: 84 mL
Silica Gel Container No.: 217
Filter Number: 3

Leak Check - Meter Box:
Initial: 0.000 cfm @ 10 inches Hg
Final: 0.004 cfm @ 7 inches Hg

Leak Check - Pitot Tubes:
Impact 3 "H_2O for 15 sec: Stable Leak
Static 3 "H_2O for 15 sec: Stable Leak

Test Conducted By: R Paul
O_2: 5.0 % | CO_2: 11.0 %
Stack Test Observers:

Port and Traverse Point No.	Distance from Inside Stack Wall (in.)	Clock Time	Gas Meter Reading (ft^3)	Stack Velocity Head (H_2O)	Meter Orifice Pressure Difference (H_2O) Calculated	Actual	Stack Gas Temp (°F)	Sample Box Temp (°F)	Last Impinger Temp (°F)	Meter Temp (°F)	Vacuum on Sample Train ("Hg)	Oxygen Meter Reading (%O_2)
1-1			20.5	1.4	2.76	2.76	298		72	102	6	
2			25.2	1.3	2.56	2.56	297		68	103	6	
3			30.0	1.1	2.17	2.17	297		66	102	6	
2-1			34.3	1.3	2.56	2.56	296		69	102	6	
2			38.8	1.3	2.56	2.56	297		65	102	6	
3			43.2	1.2	2.36	2.36	297		66	103	6	
3-1			47.6	1.3	2.56	2.56	293		66	103	6	
2			52.2	1.3	2.56	2.56	297		64	103	6	

KOOGLER & ASSOCIATES, INC.
ENVIRONMENTAL SERVICES

Port and Traverse Point No.	Distance from Inside Stack Wall (in.)	Clock Time	Gas Meter Reading (ft^3)	Stack Velocity Head (H_2O)	Meter Orifice Pressure Difference (H_2O)		Stack Gas Temp (°F)	Sample Box Temp (°F)	Last Impinger Temp (°F)	Meter Temp (°F)	Vacuum on Sample Train ("Hg)	Oxygen Meter Reading (%O2)
					Calculated	Actual						
3-3			56.8	1.2	2.37	2.37	298		65	102	6	
4-1			61.2	1.3	2.56	2.56	298		67	103	6	
2			65.6	1.2	2.37	2.37	297		65	103	6	
3			70.2	1.2	2.37	2.37	298		66	103	6	

KOOGLER & ASSOCIATES, INC.
ENVIRONMENTAL SERVICES

Multiple Methods Data Sheet

Plant: Progress Energy - Crystal River
Sample Location: Unit 5
Control Type: ESP
Sample Type: Part
Date: 5-22-06 | Run No.: 4
Time Start: 1534 | Time End: 1642
Sample Time: 5 | min/point 60 Total Mins.
Dry Bulb: °F | Wet Bulb: °F | VP@DP:
Bar. Pres: 30.42 "Hg | Stack Pres: 30.06 "Hg | Ps: -0.88 "H_2O
Moisture: 7 % | FDA: | Gas Density Factor:
Temp: 90 °F | Wind Direction: — | Wind Speed: —
Weather: cldy | Thermocouple Readout: KAK-8
Sample Box No.: KA-8 | Meter Box No.: KA-8
Meter Y: 0.998 @ | Delta H: KA-8 | Pitot Corr.: 0.84
Nozzle Diameter: 0.232 inches | Probe Length: 9.5 feet
Probe Heater Setting: 320° | Nomograph Cf: 1.97
Stack Dimensions: 308 inches
Stack Area: 517.4 ft^2
Effective Stack Area: 517.4 ft^2
Stack Height: ft

Stack Dimensions

Umbilical: KAK-100
Thermocouple Probe No. KAK 410
Pitot Tube: KA SSI

Material Processing Rate:
Final Gas Meter Reading: 129.920 ft^3
Initial Gas Meter Reading: 74.900 ft^3
Total Metered Gas Volume: 55.020 ft^3
Condensate Gain in Impingers: 84 mL
Weight Gain in Silica Gel: 10 g
Total Moisture Gain: 94 mL
Silica Gel Container No.: 37
Filter Number: 4

Leak Check - Meter Box:
Initial: 0.008 cfm @ 10 inches Hg
Final: 0.004 cfm @ 9 inches Hg
Leak Check - Pitot Tubes:
Impact 3 "H_2O for 15 sec Stable, Leak
Static 3 "H_2O for 15 sec Stable, Leak

Test Conducted By: R Paul A West
O_2: 4.0 % | CO_2: 11.0 %
Stack Test Observers:

Port and Traverse Point No.	Distance from Inside Stack Wall (in.)	Clock Time	Gas Meter Reading (ft^3)	Stack Velocity Head (H_2O)	Meter Orifice Pressure Difference (H_2O) Calculated	Actual	Stack Gas Temp (°F)	Sample Box Temp (°F)	Last Impinger Temp (°F)	Meter Temp (°F)	Vacuum on Sample Train ("Hg)	Oxygen Meter Reading (%O_2)
1-1			74.9	1.3	2.56	2.56	299		66	104	7	
2			79.5	1.3	2.56	2.56	298		62	104	7	
3			84.1	1.2	2.36	2.36	296		62	104	7	
2-1			88.6	1.4	2.76	2.76	297		63	103	8	
2			93.3	1.3	2.56	2.56	298		58	103	7	
3			98.0	1.1	2.17	2.17	297		58	103	7	
3-1			102.3	1.4	2.76	2.76	295		60	103	8	
2			7.1	1.4	2.76	2.76	298		58	103	8	

KOOGLER & ASSOCIATES, INC.
ENVIRONMENTAL SERVICES

Port and Traverse Point No.	Distance from Inside Stack Wall (in.)	Clock Time	Gas Meter Reading (ft^3)	Stack Velocity Head (H_2O)	Meter Orifice Pressure Difference (H_2O)		Stack Gas Temp (°F)	Sample Box Temp (°F)	Last Impinger Temp (°F)	Meter Temp (°F)	Vacuum on Sample Train ("Hg)	Oxygen Meter Reading (%O2)
					Calculated	Actual						
3-3			11.9	1.2	2.36	2.36	296		58	103	7	
4-1			16.4	1.4	2.76	2.76	294		62	104	8	
2			20.9	1.2	2.36	2.36	295		59	104	7	
3			25.5	1.2	2.36	2.36	297		58	103	7	

KOOGLER & ASSOCIATES, INC.
ENVIRONMENTAL SERVICES

Multiple Methods Data Sheet

Plant: Progress Energy-Crystal River
Sample Location: Unit 5
Control Type: ESP
Sample Type: Part
Date: 5-22-06 | Run No.: 5
Time Start: 1657 | Time End: 1805
Sample Time: 5 | min/point 60 Total Mins.
Dry Bulb: °F | Wet Bulb: °F | VP@DP:
Bar. Pres: 30.12 "Hg | Stack Pres: 30.06 "Hg | Ps: -0.88 "H_2O
Moisture: 7 % | FDA: | Gas Density Factor:
Temp: 85 °F | Wind Direction: — | Wind Speed: —
Weather: PC | Thermocouple Readout: KAH-8
Sample Box No.: KA-8 | Meter Box No.: KA-8
Meter Y: 0.998 @ | Delta H: 1.69 | Pitot Corr.: 0.84
Nozzle Diameter: 0.232 inches | Probe Length: 9.22 feet
Probe Heater Setting: 320° | Nomograph Cf: 1.97
Stack Dimensions: 308 inches
Stack Area: 517.4 ft^2
Effective Stack Area: 517.4 ft^2
Stack Height: ft

Umbilical: KAH-100
Thermocouple Probe No. KAH-110
Pitot Tube: KA-SSI

Stack Dimensions

Material Processing Rate:
Final Gas Meter Reading: 184.757 ft^3
Initial Gas Meter Reading: 130.202 ft^3
Total Metered Gas Volume: 54.555 ft^3
Condensate Gain in Impingers: 88 mL
Weight Gain in Silica Gel: 10 g
Total Moisture Gain: 98 mL
Silica Gel Container No.: 6
Filter Number: 5

Leak Check - Meter Box:
Initial: 0.006 cfm @ 10 inches Hg
Final: 0.003 cfm @ 7 inches Hg

Leak Check - Pitot Tubes:
Impact 3 "H_2O for 15 sec: Stable, Leak
Static 3 "H_2O for 15 sec: Stable, Leak

Test Conducted By: RPaul
O_2: 4.0 % | CO_2: 10.5 %
Stack Test Observers:

Port and Traverse Point No.	Distance from Inside Stack Wall (in.)	Clock Time	Gas Meter Reading (ft^3)	Stack Velocity Head (H_2O)	Meter Orifice Pressure Difference (H_2O) Calculated	Meter Orifice Pressure Difference (H_2O) Actual	Stack Gas Temp (°F)	Sample Box Temp (°F)	Last Impinger Temp (°F)	Meter Temp (°F)	Vacuum on Sample Train ("Hg)	Oxygen Meter Reading (%O_2)
1-1			30.2	1.3	2.56	2.56	297		66	103	6	
2			35.0	1.3	2.56	2.56	297		59	103	6	
3			39.5	1.3	2.56	2.56	298		59	103	6	
2-1			44.1	1.3	2.56	2.56	292		62	103	6	
2			48.6	1.3	2.56	2.56	298		58	103	6	
3			53.3	1.3	2.56	2.56	295		57	103	6	
3-1			57.7	1.3	2.56	2.56	292		62	103	6	
2			62.2	1.3	2.56	2.56	297		56	103	6	

KOOGLER & ASSOCIATES, INC.
ENVIRONMENTAL SERVICES

Port and Traverse Point No.	Distance from Inside Stack Wall (in.)	Clock Time	Gas Meter Reading (ft^3)	Stack Velocity Head (H_2O)	Meter Orifice Pressure Difference (H_2O)		Stack Gas Temp (°F)	Sample Box Temp (°F)	Last Impinger Temp (°F)	Meter Temp (°F)	Vacuum on Sample Train ("Hg)	Oxygen Meter Reading (%O2)
					Calculated	Actual						
3-3			66.7	1.3	2.56	2.56	297		57	103	6	
4-1			71.3	1.3	2.56	2.56	293		62	103	6	
2			75.8	1.3	2.56	2.56	297		57	103	6	
3			80.3	1.1	2.17	2.17	296		58	103	6	

KOOGLER & ASSOCIATES, INC.
ENVIRONMENTAL SERVICES

Multiple Methods Data Sheet

Plant: Progress Energy - Crystal River
Sample Location: Unit 5
Control Type: EAP
Sample Type: Part
Date: 5-22-06 | Run No.: 6
Time Start: 1818 | Time End: 1923
Sample Time: 5 | min/point 60 | Total Mins.
Dry Bulb: °F | Wet Bulb: °F | VP@DP:
Bar. Pres: 30.12 "Hg | Stack Pres: 30.06 "Hg | Ps: -0.88 "H_2O
Moisture: 7 % | FDA: | Gas Density Factor:
Temp: 85 °F | Wind Direction: — | Wind Speed: —
Weather: Clear | Thermocouple Readout: KAK-8
Sample Box No. KA-8 | Meter Box No.: KA-8
Meter Y: 0.998 @ | Delta H: 1.69 | Pitot Corr.: 0.84
Nozzle Diameter: 0.232 inches | Probe Length: 9.22 feet
Probe Heater Setting: 320° | Nomograph Cf: 1.97
Stack Dimensions: 308 inches
Stack Area: 517.4 ft^2
Effective Stack Area: 517.4 ft^2
Stack Height: ft

Stack Dimensions

Umbilical: KAK-100
Thermocouple Probe No. KAK-110
Pitot Tube: KASSI

Material Processing Rate:
Final Gas Meter Reading: 239.715 ft^3
Initial Gas Meter Reading: 185.100 ft^3
Total Metered Gas Volume: 54.615 ft^3
Condensate Gain in Impingers: 82 mL
Weight Gain in Silica Gel: 11 g
Total Moisture Gain: 93 mL
Silica Gel Container No.: 32
Filter Number: 6

Leak Check - Meter Box:
Initial: 0.008 cfm @ 10 inches Hg
Final: 0.001 cfm @ 7 inches Hg

Leak Check - Pitot Tubes:
Impact 3 "H_2O for 15 sec: Stable, Leak
Static 3 "H_2O for 15 sec: Stable, Leak

Test Conducted By: R Paul
O_2: 5.0 % | CO_2: 10.5 %
Stack Test Observers:

Port and Traverse Point No.	Distance from Inside Stack Wall (in.)	Clock Time	Gas Meter Reading (ft^3)	Stack Velocity Head (H_2O)	Meter Orifice Pressure Difference (H_2O) Calculated	Actual	Stack Gas Temp (°F)	Sample Box Temp (°F)	Last Impinger Temp (°F)	Meter Temp (°F)	Vacuum on Sample Train ("Hg)	Oxygen Meter Reading (%O_2)
1-1			85.1	1.3	2.56	2.56	298		68	103	.5	
2			88.7	1.3	2.56	2.56	297		64	103	5	
3			93.3	1.2	2.36	2.36	297		62	103	5	
2-1			97.7	1.4	2.76	2.76	297		64	102	6	
2			202.4	1.2	2.36	2.36	297		60	102	5	
3			7.0	1.2	2.36	2.36	297		60	102	5	
3-1			11.4	1.4	2.76	2.76	297		60	103	6	
2			16.3	1.4	2.76	2.76	297		60	102	6	

KOOGLER & ASSOCIATES, INC.
ENVIRONMENTAL SERVICES

Port and Traverse Point No.	Distance from Inside Stack Wall (in.)	Clock Time	Gas Meter Reading (ft^3)	Stack Velocity Head (H_2O)	Meter Orifice Pressure Difference (H_2O)		Stack Gas Temp (°F)	Sample Box Temp (°F)	Last Impinger Temp (°F)	Meter Temp (°F)	Vacuum on Sample Train ("Hg)	Oxygen Meter Reading (%O2)
					Calculated	Actual						
3-3			21.1	1.4	2.76	2.76	295		61	103	6	
4-1			25.7	1.5	2.96	2.96	295		63	103	6	
2			30.6	1.2	2.36	2.36	297		60	103	5	
3			35.2	1.2	2.36	2.36	296		61	103	5	

KOOGLER & ASSOCIATES, INC.
ENVIRONMENTAL SERVICES

SAMPLING RATE CALCULATIONS

Date: 5-22-06

Plant Name/Location: Progress Energy Crystal River

Source: Unit 5

1) Calculate the optimum Cf:

$$\Delta H @ / \Delta P_{avg} = Cf$$

ΔH	/ ΔP avg	= Cf

2) Calculate the optimum nozzle size:

Record Values		
R1	R2	R3
90	101	
0.08	0.07	
28.1	28.7	
300		
1.69		

Tm = Meter Temperature (°F) (Add 5 °F for initial temp.)

Bw = Moisture Fraction

Ms = Wet Molecular Weight of Stack Gas (from Table)

Ts = Stack Temperature (°F)

ΔH@ = Meter Box Constant (box front)

ΔP = Average Pitot Reading (Inches H20)

Dn = Nozzle Diameter (Inches) measured

Moisture Fraction	MS
0	29
0.05	28.5
0.1	27.9
0.15	27.4
0.2	26.8
0.25	26.2
0.3	25.7
0.35	25.2
0.4	24.6

$$Dn = \left[\frac{Cf}{\left(\frac{Tm+460}{MS(Ts+460)}\right) * \left(1 - \frac{Bw}{100}\right)^2 * (\Delta H@) * (1774)} \right]^{0.25}$$

3) Calculate the correction factor Cf. Cf times the stack ΔP will determine the manometer setting ΔH:

$$Cf = \left[\frac{Tm+460}{Ms*(Ts+460} \right] * (1-Bw)^2 * \Delta H@ * Dn^4 * 1774$$

$$Cf * \Delta P = \Delta H$$

Calculation	Run No. 1		Run No. 2		Run No. 3	
Tm + 460 =	550		561			
/ [MS*(Ts+460)] =	21356		21291			
* (1 - Bw)^2 =	0.8464		0.8649			
* ΔH@ =	1.69		1.69			
* (Dn)^4 =	0.00289		0.00289			
* 17741 = Cf			1.97			

Chain of Custody

Plant Name: Progress Energy Project Number: _____

Location: Crystal River Source: Unit 5

Sample Identification	Remarks
1-CR5-M	Nozzle Wash Run 1
2-CR5-M	" " " 2
3-CR5-M	" " " 3
1-CR5-F	Filter Run 1
2-CR5-F	" " 2
3-CR5-F	" " 3
39	Silica Gel Run 1
25	" " " 2
17	" " " 3

	Signature	Date	Time
Sampled by:	R Paul	5-22-06	See data
Relinquished by:			
Received by:			
Relinquished by:			
Laboratory: Received by:	R Paul	5-25-06	1630

Sample Shipped Via: ○ UPS ○ Federal Express ○ Other

Shipping Bill Number: _____

KOOGLER & ASSOCIATES
ENVIRONMENTAL SERVICES

Chain of Custody

Plant Name: Progress Energy Project Number: _____

Location: Crystal River Source: Unit 5

Sample Identification	Remarks
4-CR5-N	Nozzle Wash Rem 4
5-CR5-N	" " " 5
6-CR5-N	" " " 6
4-CR5-F	Filter Rem 4
5-CR5-F	" " 5
6-CR5-F	" " 6
37	Silica Gel Rem 4
6	" " " 5
32	" " " 6

	Signature	Date	Time
Sampled by:	R Paul	5-22-06	See date
Relinquished by:			
Received by:			
Relinquished by:			

Laboratory:

	Signature	Date	Time
Received by:	R Paul	5-25-06	1630

Sample Shipped Via: ○ UPS ○ Federal Express ○ Other

Shipping Bill Number: _____

KOOGLER & ASSOCIATES
ENVIRONMENTAL SERVICES

Particulate Lab Data Sheet

Test Date: 5-22-06

Plant Name: Progress Energy / Crystal River

Source: Unit 5

	Run No. 1	Run No. 2	Run No. 3	Blank
Container No.	1	2	802	111
Total Volume (ml)	50	55	50	50
Aliquot Evaporated (ml)	50	55	50	50
Final Weight (g)	116.2591	111.0304	98.9915	110.5752
Tare Weight (g)	116.2575	111.0281	98.9893	110.5756
Gross Weight Gained (g)	0.0016	0.0023	0.0022	-0.0004
Average Blank (g)	—	—	—	
Net Weight (g)	0.0016	0.0023	0.0022	
Aliquot Factor	x 1.0	x 1.0	x 1.0	x
Total Net Weight (mg)	1.6	2.3	2.2	

Container No.	1-A	2-A	3-A	3-B
Filter No.	4404	4405	4406	4435
Final Weight (g)	0.1270	0.1274	0.1270	0.1226
Tare Weight (g)	0.1232	0.1230	0.1222	0.1228
Gross Weight Gained	0.0038	0.0044	0.0048	-0.0002
Average Blank (g)	—	—	—	
Total Net Weight (mg)	3.8	4.4	4.8	

Tare Balance Check

0.0 0.0000 10.0 9.9998
1.0 1.0000 50.0 50.0002
5.0 5.0001 100.0 100.0001
T/H 73/43

Signature

05/22/06
Date

Final Balance Check

0.0 / 10.0 /
1.0 / 50.0 /
5.0 / 100.0 /
T/H 77-43

R Paul
Signature

5-30-06
Date

KOOGLER & ASSOCIATES
ENVIRONMENTAL SERVICES

Particulate Lab Data Sheet

Test Date: 5-22-06

Plant Name: Progress Energy/Crystal River

Source: Unit 5

	Run No. 4	Run No. 5	Run No. 6	Blank
Container No.	10	429	76	
Total Volume (ml)	70	70	55	
Aliquot Evaporated (ml)	70	70	55	
Final Weight (g)	116.6960	113.4460	111.4473	
Tare Weight (g)	116.6944	113.4459 56 sec	111.4466	
Gross Weight Gained (g)	0.0016	0.0010	0.0007	
Average Blank (g)	—	—	—	
Net Weight (g)	0.0016	0.0010	0.0007	
Aliquot Factor	x 1.0	x 1.0	x 1.0	x
Total Net Weight (mg)	1.6	1.0	0.7	

Container No.	1-B	2-B	3-B	
Filter No.	4407	4408	4409	
Final Weight (g)	0.1260	0.1269	0.1256	
Tare Weight (g)	0.1222	0.1227	0.1222	
Gross Weight Gained	0.0038	0.0042	0.0034	
Average Blank (g)	—	—	—	
Total Net Weight (mg)	3.8	4.2	3.4	

Tare Balance Check

0.0	✓	10.0	9.9997
1.0	1.0001	50.0	49.9999
5.0	5.0002	100.0	100.0002

T/H 74/42

Signature

5/22/06

Date

Final Balance Check

0.0		10.0	
1.0		50.0	
5.0		100.0	

T/H 77/43

R Paul

Signature

5-30-06

Date

KOOGLER & ASSOCIATES
ENVIRONMENTAL SERVICES

Carbon Monoxide

KOOGLER & ASSOCIATES, INC.
ENVIRONMENTAL SERVICES

PLANT Progress Energy
LOCATION Crystal River, FL
EMISSION UNIT Unit #5
TEST CO

DATE 5/22/06
INST. RANGE 0-500 (200 ppm)
LEAK CHECK 0.0"
NOTES

TIME	GAS	TIME	GAS
10:36	Zero air on	16:41	50.2 CO on
10:40	Zero air = 1.0	16:45	50.2 CO = 48.7
10:43	195 CO on	16:57	Start Run #5
10:49	195 CO = 194	17:57	End Run # 5
10:53	99.1 CO on	17:58	Zero air on
10:57	99.1 CO = 100 ~ 98	18:01	Zero air = -0.6
11:01	50.2 CO on	18:03	50.2 CO on
11:04	50.2 CO = 51	18:08	50.2 CO = 48.5
11:07	Zero air on	18:18	Start Run #6
11:11	Zero air = 1.5 ~ 0.5	19:18	End Run #6
11:19	Start Run #1	19:19	Zero air on
12:21	End Run #1	19:23	Zero air = 0.1
12:22	Zero air on	19:27	~~Zero air~~ = 50.2 CO on
12:25	Zero air = 0	19:29	50.2 CO = 50.9
12:28	50.2 CO on		
12:32	50.2 CO = 49		
12:45	Start Run #2		
13:45	End Run #2 Zero air on 13:46		
13:49	Zero air = ~1.5		
13:52	50.2 CO on		
13:56	50.2 CO = 48.8		
14:09	Start Run #3		
15:09	End Run #3		
15:10	Zero air on		
15:14	Zero air = 1		
15:17	50.2 CO on		
15:23	50.2 CO = 48.6		
15:34	Start Run #4		
16:34	End Run #4		
16:35	Zero air on		
16:38	Zero air = 0.6		

Sampling Equipment Calibration Records

KOOGLER & ASSOCIATES, INC.
ENVIRONMENTAL SERVICES

Nozzle Calibration

Date: 5-22-06

Plant Name: Progress Energy

Location: Crystal River

Source: Unit 5

Measurement Number	Inside Diameter (inches)
1	0.232
2	0.231
3	0.233
Average	0.232
Area of Nozzle	0.000294 Ft.^{2}

Calibrated by: R Paul

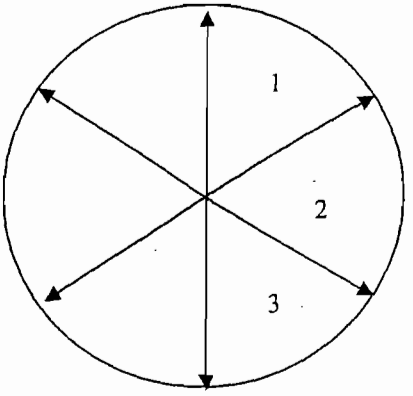

Nozzle X-Section

KOOGLER & ASSOCIATES
ENVIRONMENTAL SERVICES

Pitot Tube Calibration Measurements

Pitot Tube Identification Number: SSI

Date Calibrated: 12-15-05

Pitot Tube Assembly Level: Yes ☐ No ☐

Pitot Tube Openings Damaged: Yes ☐ No ☑; If yes, please explain: _____

Dt_A = 0.371 in. (Dt_A = 0.1875 - 0.3750 in.)

Dt_B = 0.372 in. (Dt_B = 0.1875 - 0.3750 in.)

α_A = 1.5° (<10°) α_B = 1.5° (<10°)

β_A = 2.5° (<5°) β_B = 1.5° (<5°)

γ = 0.5°, θ = 0.5°,

P_A = 0.465 (P_A = 1.05 Dt to 1.50 Dt)

P_B = 0.466 (P_B = 1.05 Dt to 1.50 Dt)

$P_A + P_B = A$ = 0.930 [A = 2x(1.05 Dt to 1.50 Dt)]

Z = A SIN γ = <0.01 in. (<0.125 in.)

W = A SIN θ = <0.01 in. (<0.031 in.)

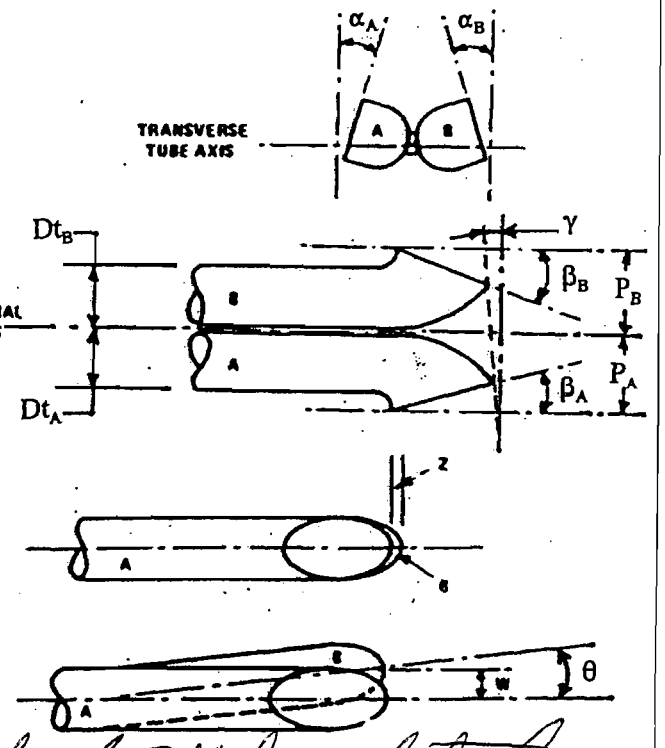

Comments: Pitot tubes looked OK during test

Calibration required? Yes ☐ No ☐

Calibrated by: R Paul

KAForms: Pitot Tube Calibration Measurements
jhm,10/23/01

Post Test Thermocouple Calibration

Date: 5-22-06

Plant Name: Progress Energy

Location: Crystal River

Source: Unit 5

Thermocouple Readout No.	KAH-8
Umbilical Cord No.	KAH-100
Switch Box No.	KAH-8
Thermocouple No.	KAH-110
Average Stack Temperature °F	296
* Observed Mercury in Glass (ASTM) °F	297
Observed Thermocouple Reading °F	297

* Observed temperature must be within ten percent of the average stack temperature.

Percent Difference $\frac{(\text{ASTM} + 460) - (\text{Thermo} + 460)}{(\text{ASTM} + 460)} \times 100 =$ 0.0 %

Tolerance ≤ 1.5%

Signature: R Paul

KOOGLER & ASSOCIATES
ENVIRONMENTAL SERVICES

FIELD DATA SHEET: **POST-TEST DRY GAS METER CALIBRATION USING CRITICAL ORIFICES**

Koogler & Associates Environmental Services

1) Select one critical orifice to calibrate the dry gas meter which approximates the test average delta H range.
2) Record barometric pressure before and after calibration procedure.
3) Run at tested vacuum (from Orifice Calibration Report), for a period of time necessary to achieve a minimum total volume of 5 cubic feet.
4) Record readings in outlined boxes below.

COMPANY: Progress Energy (Crystal River)
SOURCE: Unit # 5
TEST DATE: 5/22/06
METER Y: 0.998
AVG. DELTA H: 1.69

METER SERIAL #: KA-8
CRITICAL ORIFICE SERIAL #: 1376-26

	INITIAL	FINAL
BAROMETRIC PRESSURE (in Hg):	30.00	30.00

RUN	ORIFICE NO.	K' FACTOR (AVG)	TESTED VACUUM (in Hg)	DGM READINGS (FT^3) INITIAL	DGM READINGS (FT^3) FINAL	TEMPERATURES °F AMBIENT	DGM INLET INITIAL	DGM INLET FINAL	DGM OUTLET INITIAL	DGM OUTLET FINAL	ELAPSED TIME (MIN)	DGM ΔH (in H_2O)
1	26	0.7142	18	679.764	686.364	76	77	77	77	77	7.0	2.6
2	26	0.7142	18	686.364	694.421	76	77	77	77	77	8.5	2.7
3	26	0.7142	18	694.421	702.969	76	77	77	77	77	9.0	2.6

Test Conducted by: ADAM WEST
Signature: adam West
Date: 5/26/06

POST-TEST DRY GAS METER CALIBRATION USING CRITICAL ORIFICES

Koogler & Associates
Environmental Services

1) Select one critical orifice to calibrate the dry gas meter which represents the observed operating range.
2) Record barometric pressure before and after calibration procedure.
3) Run at tested vacuum (from Orifice Calibration Report), for a period of time necessary to achieve a minimum total volume of 5 cubic feet.
4) Record readings in outlined boxes below, other columns are automatically calculated.

COMPANY: Progrees Energy "Crystal "River"
SOURCE: Unit #5
DATE: 5/22/06
PRETEST Y: 0.998

METER SERIAL #: KA-8
CRITICAL ORIFICE SERIAL #: 1376-26

	INITIAL	FINAL	AVG (P_{bar})
BAROMETRIC PRESSURE (In Hg):	30	30	30

RUN NO.	ORIFICE NO.	K' FACTOR (AVG)	TESTED VACUUM (in Hg)	DGM READINGS (FT^3) INITIAL	DGM READINGS (FT^3) FINAL	DGM READINGS (FT^3) NET (V_m)	TEMPERATURES °F AMBIENT	DGM INLET INITIAL	DGM INLET FINAL	DGM OUTLET INITIAL	DGM OUTLET FINAL	DGM AVG	ELAPSED TIME (MIN)	DGM ΔH (in H_2O)	(1) V_m (STD)	(2) V_{cr} (STD)	(3) Y	(4) $\Delta H_@$
1	26	0.7142	18	679.764	686.364	6.600	76	77	77	77	77	77	7.0	2.6	6.55	6.48	0.989	1.707
2	26	0.7142	18	686.364	694.421	8.057	76	77	77	77	77	77	8.5	2.7	8.00	7.87	0.984	1.772
3	26	0.7142	18	694.421	702.969	8.548	76	77	77	77	77	77	9.0	2.6	8.48	8.33	0.982	1.707
																AVG =	0.985	

USING THE CRITICAL ORIFICES AS CALIBRATION STANDARDS:
The following equations are used to calculate the standard volumes of air passed through the DGM, V_m (std), and the critical orifice, V_{cr} (std), and the DGM calibration factor, Y. These equations are automatically calculated in the spreadsheet above.

(1) $$V_m(std) = K_1 V_m Y \left[\frac{P_{bar} + \left(\Delta H / 136\right)}{T_m} \right]$$

(2) $$V_{cr}(std) = K' \left[\frac{P_{bar}\,\theta}{\sqrt{T_{amb}}} \right]$$

(3) $$Y = \frac{V_{cr}(std)}{V_m(std)}$$

(4) $$\Delta H_@ = \left(\frac{0.75 * \theta}{V_{CR}(sdt)} \right)^2 * \Delta H$$

V_m(std) = Net volume of gas sample passed through DGM, corrected to standard conditions.
K_1 = 17.64 °R/in. Hg
Y = DGM calibration factor
V_{cr} (std) = Volume of gas sample passed through the critical orifice, corrected to standard conditions.
Pbar = Barometric pressure at the sampling site (in. Hg).
ΔH = Orifice pressure differential (in. H2O).
θ = Total smapling time (min.)
T_m = Absolute DGM avg. temperature °R
T_{amb} = Absolute ambient temperature °R
K' = Average K' factor from Critical Orifice Calibration

AVERAGE DRY GAS METER CALIBRATION FACTOR, Y =	0.985
AVERAGE DELTA Y=	-0.013
DELTA Y LIMIT =	0.05
IS TEST WITHIN 5%?	YES

METHOD 5 DRY GAS METER CALIBRATION USING CRITICAL ORIFICES

Quality - Service - Reliability

ENVIRONMENTAL SUPPLY COMPANY

1) Select three critical orifices to calibrate the dry gas meter which bracket the expected operating range.
2) Record barometric pressure before and after calibration procedure.
3) Run at tested vacuum (from Orifice Calibration Report), for a period of time necessary to achieve a minimum total volume of 5 cubic feet.
4) Record data and information in the **GREEN** cells, YELLOW cells are calculated.

DATE: 1/12/06

METER PART #: KA-8

METER SERIAL #: KA-8

CRITICAL ORIFICE SET SERIAL #: 1376

BAROMETRIC PRESSURE (in Hg):	INITIAL	FINAL	AVG (P_{bar})
	30.16	30.16	30.16

IF Y VARIATION EXCEEDS 2.00%, ORIFICE SHOULD BE RECALIBRATED

ORIFICE #	RUN #	K' FACTOR (AVG)	TESTED VACUUM (in Hg)	DGM READINGS (FT^3) INITIAL	DGM READINGS (FT^3) FINAL	DGM READINGS (FT^3) NET (V_m)	TEMPERATURES °F AMBIENT	DGM INLET INITIAL	DGM INLET FINAL	DGM OUTLET INITIAL	DGM OUTLET FINAL	DGM AVG	ELAPSED TIME (MIN) θ	DGM ΔH (in H_2O)	(1) V_m (STD)	(2) V_{cr} (STD)	(3) Y	Y VARIATION (%)	$\Delta H_@$
22	1	0.5836	18	685.617	692.456	6.839	74	75	76	76	77	76	9.00	1.8	6.8220	6.8572	1.005		1.74
	2	0.5836	18	734.865	741.458	6.593	77	78	78	85	86	81.75	8.50	1.8	6.5068	6.4581	0.993		1.73
	3	0.5836	18	741.458	748.806	7.348	78	78	78	86	87	82.25	9.50	1.8	7.2452	7.2111	0.995		1.73
																AVG =	0.998	-0.05	
17	1	0.4505	18	699.593	707.321	7.728	75	76	77	79	81	78.25	13.00	1	7.6616	7.6387	0.997		1.62
	2	0.4505	18	748.806	754.534	5.728	78	78	79	87	87	82.75	9.50	1	5.6317	5.5665	0.988		1.61
	3	0.4505	18	754.534	760.269	5.735	78	79	79	87	87	83	9.50	1	5.6360	5.5665	0.988		1.61
																AVG =	0.991	-0.72	
26	1	0.7142	18	707.321	717.568	10.247	76	77	78	81	83	79.75	11.00	2.7	10.1726	10.2373	1.006		1.74
	2	0.7142	18	717.568	725.976	8.408	76	78	78	83	84	80.75	9.00	2.7	8.3315	8.3760	1.005		1.74
	3	0.7142	18	725.976	734.865	8.889	77	78	83	84	85	82.5	9.50	2.7	8.7797	8.8331	1.006		1.74
																AVG =	1.006	0.77	

USING THE CRITICAL ORIFICES AS CALIBRATION STANDARDS:

The following equations are used to calculate the standard volumes of air passed through the DGM, V_m (std), and the critical orifice, V_{cr} (std), and the DGM calibration factor, Y. These equations are automatically calculated in the spreadsheet above.

AVERAGE DRY GAS METER CALIBRATION FACTOR, Y = 0.998

AVERAGE $\Delta H_@$ = 1.69

(1) $$Vm_{(std)} = K_1 * Vm * \frac{Pbar + (\Delta H / 13.6)}{Tm}$$

= Net volume of gas sample passed through DGM, corrected to standard conditions

K_1 = 17.64 °R/in. Hg (English), 0.3858 °K/mm Hg (Metric)

T_m = Absolute DGM avg. temperature (°R - English, °K - Metric)

(2) $$Vcr_{(std)} = K' * \frac{Pbar * \Theta}{\sqrt{Tamb}}$$

= Volume of gas sample passed through the critical orifice, corrected to standard conditions

T_{amb} = Absolute ambient temperature (°R - English, °K - Metric)

K' = Average K' factor from Critical Orifice Calibration

(3) $$Y = \frac{Vcr_{(std)}}{Vm_{(std)}}$$

= DGM calibration factor

$$\Delta H_@ = \left(\frac{0.75\,\theta}{V_{cr}(std)}\right)^2 \Delta H \left(\frac{V_m(std)}{V_m}\right)$$

KOOGLER & ASSOCIATES, Inc.
THERMOCOUPLE CALIBRATION

"K" TYPE											
	Ice			Ambient			Hot Oil				
Probe ID	NIST (F°)	Probe (F°)	% Δ	NIST (F°)	Probe (F°)	% Δ	NIST (F°)	Probe (F°)	% Δ	Average % Δ	Average Δ (F°)
KAK-5	Missing										
KAK-7	32	33	-3.1	74	76	-2.7	251	251	0.0	-1.9	1.0
KAK-8	32	33	-3.1	73	74	-1.4	251	250	0.4	-1.4	0.3
KAK-9	32	33	-3.1	72	74	-2.8	257	257	0.0	-2.0	1.0
KAK-10	32	33	-3.1	74	76	-2.7	251	252	-0.4	-2.1	1.3
KAK-11	32	34	-6.3	73	73	0.0	274	274	0.0	-2.1	0.7
KAK-12	Missing										
KAK-20	32	33	-3.1	72	74	-2.8	271	271	0.0	-2.0	1.0
KAK-33	32	34	-6.3	74	73	1.4	265	265	0.0	-1.6	0.3
KAK-35	32	34	-6.3	74	74	0.0	260	260	0.0	-2.1	0.7
KAK-36	32	34	-6.3	72	73	-1.4	276	277	-0.4	-2.7	1.3
KAK-38	32	34	-6.3	74	75	-1.4	275	275	0.0	-2.5	1.0
KAK-50	32	33	-3.1	75	76	-1.3	275	274	0.4	-1.4	0.3
KAK-51	32	34	-6.3	73	75	-2.7	271	272	-0.4	-3.1	1.7
KAK-52	32	34	-6.3	72	72	0.0	276	276	0.0	-2.1	0.7
KAK-55	32	32	0.0	71	73	-2.8	276	276	0.0	-0.9	0.7
KAK-60	32	34	-6.3	73	74	-1.4	264	265	-0.4	-2.7	1.3
KAK-61	32	34	-6.3	73	72	1.4	267	268	-0.4	-1.8	0.7
KAK-63	32	34	-6.3	73	74	-1.4	273	274	-0.4	-2.7	1.3
KAK-65	32	33	-3.1	72	72	0.0	277	280	-1.1	-1.4	1.3
KAK-71	32	34	-6.3	75	76	-1.3	279	281	-0.7	-2.8	1.7
KAK-72	32	33	-3.1	72	74	-2.8	275	277	-0.7	-2.2	1.7
KAK-76	32	35	-9.4	73	75	-2.7	275	275	0.0	-4.0	1.7
KAK-110	32	33	-3.1	72	71	1.4	276	276	0.0	-0.6	0.0
KAK-112	32	33	-3.1	72	73	-1.4	275	274	0.4	-1.4	0.3
KAK-72-A	32	33	-3.1	72	74	-2.8	275	277	-0.7	-2.2	1.7

DATE: 8/16/2005
TESTER: G.Haven and E.Thomas

Plant Operating Data

KOOGLER & ASSOCIATES, INC.
ENVIRONMENTAL SERVICES

Progress Energy
Unit 5

DATE: 5/22/06	**Run 1**	Tons Coal 02	Tons Coal 03	Tons Coal 04	Tons Coal 05	Tons Coal 06	Tons Coal 07	Tons Coal 1-6	**Tons/hr Coal 1-5**	
time start	11:18	19083	300600	393870	244121	434401	426603			
time stop	12:34	19137	300653	393922	244175	434455	426658	Total	**Total**	**MMBTU/Hr**
Total	1:16	53.8	53.0	51.6	53.7	54.1	55.1	321.3	**253.66**	**6045**

DATE: 5/22/06	**Run 2**	Tons Coal 02	Tons Coal 03	Tons Coal 04	Tons Coal 05	Tons Coal 06	Tons Coal 07	Tons Coal 1-5	**Tons/hr Coal 1-5**	
time start	12:50	19149	300666	393934	244187	434468	426670			
time stop	13:57	19199	300715	393983	244237	434518	426722	Total	**Total**	**MMBTU/Hr**
Total	1:07	50.2	49.7	48.4	50.4	50.4	51.3	300.4	**269.01**	**6411**

DATE: 5/22/06	**Run 3**	Tons Coal 02	Tons Coal 03	Tons Coal 04	Tons Coal 05	Tons Coal 06	Tons Coal 07	Tons Coal 1-5	**Tons/hr Coal 1-5**	
time start	14:09	19213	300729	393996	244251	434531	426735			
time stop	15:22	19264	300780	394046	244302	434583	426788	Total	**Total**	**MMBTU/Hr**
Total	1:13	51.5	51.3	50.0	51.0	51.4	52.4	307.6	**263.70**	**6284**

AVE. % Capacity
93.73

Progress Energy
Unit 5

DATE: 5/22/06	**Run 4**	Tons Coal 02	Tons Coal 03	Tons Coal 04	Tons Coal 05	Tons Coal 06	Tons Coal 07	Tons Coal 1-6	**Tons/hr Coal 1-5**	
time start	15:36	19273	300788	394054	244315	434596	426801			
time stop	16:41	19326	300842	394106	244369	434650	426855	Total	**Total**	**MMBTU/Hr**
Total	1:05	53.2	53.5	51.9	53.7	53.6	54.1	320.0	**295.38**	**7040**

DATE: 5/22/06	**Run 5**	Tons Coal 02	Tons Coal 03	Tons Coal 04	Tons Coal 05	Tons Coal 06	Tons Coal 07	Tons Coal 1-5	**Tons/hr Coal 1-5**	
time start	17:00	19337	300851	394115	244377	434659	426865			
time stop	18:12	19391	300905	394168	244432	434714	426921	Total	**Total**	**MMBTU/Hr**
Total	1:12	54.0	54.0	53.0	55.0	55.0	56.0	327.0	**272.50**	**6494**

DATE: 5/22/06	**Run 6**	Tons Coal 02	Tons Coal 03	Tons Coal 04	Tons Coal 05	Tons Coal 06	Tons Coal 07	Tons Coal 1-5	**Tons/hr Coal 1-5**	
time start	18:18	19399	300913	394175	244437	434718	426926			
time stop	19:20	19444	300958	394219	244485	434767	426975	Total	**Total**	**MMBTU/Hr**
Total	1:02	45.0	45.0	44.0	48.0	49.0	49.0	280.0	**270.97**	**6458**

AVE. % Capacity
99.98

Run 1-6	**AVE. % Capacity**
	96.86

Crystal River Fossil Plant
PRB Trial – 5/22/06
Heat Rate Data Collection Form
Unit 5 only

Test Identification: Run #1							
Test Date: MAY 22, 2006							
		Coal Feeder Integrators					
	HR:MN	502	503	504	505	506	507
Start Time:	11:18	190828.300	300599.900	393870.300	244121.200	434401.300	426602.600
End Time:	12:34	191365.500	300632.900	393921.900	244174.900	434455.400	426657.700
Difference:	:						
	Unit MWs at Start: 710		710	Unit MWs at End:		711	

Test Identification: Run #2							
Test Date:							
		Coal Feeder Integrators					
	HR:MN	502	503	504	505	506	507
Start Time:	12:50	191491.100	300663.500	393934.300	244187.000	434467.700	426670.300
End Time:	13:57	191993.300	300715.200	393982.700	244237.400	434518.100	426721.600
Difference:	:						
	Unit MWs at Start:		711	Unit MWs at End:		710	

Test Identification: Run #3							
Test Date:							
		Coal Feeder Integrators					
	HR:MN	502	503	504	505	506	507
Start Time:	14:09	192128.800	300728.300	394195.700	244250.500	434531.400	426735.400
End Time:	15:22	192643.400	300779.800	394043.700	244301.500	434582.800	426787.800
Difference:	:						
	Unit MWs at Start:		710	Unit MWs at End:		711	

Comments: _____

Test Identification: Run #4							
Test Date: MAY 22, 2006							
		Coal Feeder Integrators					
	HR:MN	502	503	504	505	506	507
Start Time:	15 :36	19272,900	300788,100	394654,000	244314,800	434546,000	426801,300
End Time:	16 : 41	19326,100	300841,600	394105,100	244368,500	434649,600	426855,400
Difference:	:						
	Unit MWs at Start:		712	Unit MWs at End:		709	

Test Identification: Run #5							
Test Date:							
		Coal Feeder Integrators					
	HR:MN	502	503	504	505	506	507
Start Time:	17 00	19337	300851	394115	244377	434659	426865
End Time:	18 :12	19391	300905	394168	244432	434714	426921
Difference:	:						
	Unit MWs at Start:		710	Unit MWs at End:		711	

Test Identification: Run #6							
Test Date:							
		Coal Feeder Integrators					
	HR:MN	502	503	504	505	506	507
Start Time:	18 : 18	19399	300913	394175	244437	434718	426926
End Time:	19 : 20	19444	300958	394219	244485	434767	426975
Difference:	:						
	Unit MWs at Start:		710	Unit MWs at End:		711	

Comments: _____

S.L. Sampler # 4 MAY 2006 As Bunkered Samples

	Date	Lab #	Mech Hand	Type A/D	# Samp	I.D. Shift	#/1000 Tons	Tonnage	Moisture	Ash	Volatile Matter	Fixed Carbon	Sulfur	BTU/LB	Lbs SO2 /MBTU	MAF BTU	Dry Ash	Dry Sul	Dry Btu	Dry Vol	WT X M	WT X A	WT X V	WT X S	WT X BTU
4	05/22/06	64185	M	D	26	00:01-08:00	17.9	1,456	10.46	9.69	31.34	48.51	0.69	11964	1.15	14983	10.82	0.77	13362	35.00	15230	14109	45631	1005	########
		64187	M	D	36	08:00-16:00	50.1	718	9.30	10.69	31.21	48.80	0.65	11945	1.09	14929	11.79	0.72	13170	34.41	6677	7675	22409	467	8576510
		64189	M	D	35	16:00-24:00	21.2	1,650	9.37	10.96	33.40	46.27	0.67	11887	1.13	14920	12.09	0.74	13116	36.85	15461	18084	55110	1106	########

$\bar{x}$ = [illegible]

Unit 5 Normal Operations June 5, 2006

KOOGLER & ASSOCIATES, INC.
ENVIRONMENTAL SERVICES

Calculations

Particulate Matter

KOOGLER & ASSOCIATES, INC.
ENVIRONMENTAL SERVICES

PROGRESS ENERGY - CRYSTAL RIVER
UNIT 5
JUNE 5, 2006

Run No.	Stack Gas Flow Rate (SCFMD)	Stack Gas Temperature (F)	Stack Gas Moisture (%)	Particulate Matter	
				Conc. (gr/dscf)	Emission Rate (Lbs/Hr)
1	1,579,764	297.4	8.1	0.0017	22.92
2	1,587,093	297.8	7.8	0.0019	25.41
3	1,525,604	297.9	8.6	0.0018	23.47
Avg.	1,564,154	297.7	8.1	0.0018	23.93

GENERAL DATA

Plant	:	PROGRESS ENERGY - CRYSTAL RIVER				
Source/Unit	:	UNIT 5				
Date	:	JUNE 5, 2006		Cp	0.840	
Stack dia.	:	308.00 inch	OR :	Duct Length	0.00	inch
Oxygen Corr.	:	0.0 percent		Duct Width	0.00	inch
CO2 Corr.	:	0.0 percent		Std. Temp.	68	F

FUEL ANALYSIS DATA; (By F Factor or Fuel Use)

F Factor = F, Fuel Use = U f Process Wt.

Hydrogen, wt% :	0.00	Run 1 :	0 Tons/hr
Carbon, wt% :	0.00	Run 2 :	0
Sulfur, wt% :	0.00	Run 3 :	0
Nitrogen, wt% :	0.00		
Oxygen, wt% :	0.00		
Btu/lb :	0		

Type of Flow Meter : (1=Meter Box 2=Mass Flow Meter) 1

F-Factor : dscf/MMBtu;

FIELD DATA METHOD 5	RUN 1	RUN 2	RUN 3
Meter Temp., Tm (F)	102	109	111
Stack Temp., Ts (F)	297	298	298
Sq.Rt. dP	1.18	1.18	1.14
dH (in. H2O)	1.77	1.82	1.71
Meter Vol.,Vm (ft3)	48.300	49.630	48.100
Vol. H2O, Vlc (ml)	85.0	83.0	89.0
Meter Y	0.993	0.993	0.993
Bar. Press.,Pb (in.Hg.)	30.13	30.13	30.13
Static Press.,Ps (in.H2O)	-0.97	-0.97	-0.97
Test Time (min.)	60.0	60.0	60.0
Nozzle Dia.,Dn (in.)	0.214	0.214	0.214
Oxygen, O2 (%)	4.5	4.0	4.0
Carbon Dioxide, CO2 (%)	10.5	10.5	11.0
Carbon Monoxide, CO (%)	0.0	0.0	0.0

Report Emission Criteria in ? l = lb/hr g = gr/dscf : grams

Process Rate Units ? T = Ton/hr, L = Lbs/hr, C = Cans/min: T

Allowable Particulate Matter Concentration .....: 0

LABORATORY RESULTS	RUN 1 grams	RUN 2 grams	RUN 3 grams
GRAVIMETRIC ANALYSIS METHOD 5 :			
Front Half Wash (FHW)	0.00100	0.00060	0.00050
Filterable Sample (MF)	0.00400	0.00500	0.00470
Condensible Sample (BHW)	0.00000	0.00000	0.00000

A. FIELD DATA SUMMARY

Plant: PROGRESS ENERGY - CRYSTAL RIVER
Source/Unit: UNIT 5
Date: JUNE 5, 2006

	RUN 1	RUN 2	RUN 3
Vlc = Vol water collected in train, ml	85.0	83.0	89.0
Vm = Sample gas vol, meter cond., acf	48.300	49.630	48.100
Y = Meter calibration factor	0.9930	0.9930	0.9930
Pbar = Barometric pressure, in. Hg	30.13	30.13	30.13
Pstatic = Stack static pressure, in. H2O	-0.97	-0.97	-0.97
dH = Avg meter pressure diff, in. H2O	1.77	1.82	1.71
Tm = Absolute meter temp., degrees R	562.0	568.9	570.6
Vm(std) = Sample gas vol, Std. cond., dscf	45.572	46.264	44.695
Bws = Water vapor in gas stream, fraction	0.081	0.078	0.086
MF = Moisture factor (1 - Bws)	0.919	0.922	0.914
CO2 = Carbon Dioxide, dry, volume %	10.50	10.50	11.00
O2 = Oxygen, dry, volume %	4.50	4.00	4.00
N2 = Nitrogen, dry volume %	85.00	85.50	85.00
Md = Molecular weight of stack gas, dry	29.86	29.84	29.92
Ms = Molecular weight of stack gas, wet	28.90	28.92	28.90
Cp = Pitot tube coefficient	0.84	0.84	0.84
Sq.Rt. dP = Avg. square root of each dP	1.1788	1.1813	1.1449
Ts = Absolute stack temp., degrees R	757.4	757.8	757.9
A = Area of stack, ft2	517.40	517.40	517.40
Qstd = Volumetric flowrate, dscfm	1,579,764	1,587,093	1,525,604
An = Nozzle area, ft2	2.50E-04	2.50E-04	2.50E-04
0 = Sample time, minutes	60.00	60.00	60.00
%I = Isokinetic variation, percent	99.60	100.64	101.15

B. PARTICULATE DATA SUMMARY

Plant: PROGRESS ENERGY - CRYSTAL RIVER
Source/Unit: UNIT 5
Date: JUNE 5, 2006

	RUN 1	RUN 2	RUN 3
Sample Weight (FHW + MF + BHW), mg	5.00	5.60	5.20
Meter Volume, standard cond., Vm(std)	45.572	46.264	44.695
Carbon Dioxide, percent	10.50	10.50	11.00
Oxygen, percent	4.50	4.00	4.00
Sample Concentration :			
gr/scf	0.0016	0.0017	0.0016
gr/dscf	0.0017	0.0019	0.0018
gr/dscf @ 0 % CO2	0.0019	0.0021	0.0020
gr/dscf @ 0 % O2	0.0022	0.0023	0.0022
ppm * MW (dry gas).....	93.1	102.7	98.7
ppm * MW @ 0% CO2	0.0	0.0	0.0
ppm * MW @ 0% O2	118.7	127.1	122.1

EMISSION RATE CALCULATIONS

Plant : PROGRESS ENERGY - CRYSTAL RIVER
Source/Unit : UNIT 5
Date: JUNE 5, 2006 RUN NO.: 1
STANDARD TEMP. : 68 F

Front Half Wash (FHW)	0.00100	grams	Vm(std)	45.572	ft3
Mass Filter (MF)	0.00400	grams	Vw(std)	4.001	ft3
Back Half Wash (BHW)	0.00000	grams	Qs(std)	1,579,764	dscfm
Vm(std) SO2		dscf	Bws	0.081	
CO2 CORR. 0.0 %			CO2	10.50	%
O2 CORR.: 0.0 %			O2	4.50	%

F-FACTOR

10E6 x [3.64(%H) + 1.53(%C) + 0.57(%S) + 0.14(%N) - 0.46(%O2)] / (Btu/lb) x [(Tstd + 460)/528] ..... dscf/MMBtu

FUEL USE

Use Rate (gal/ton) * Process Wt. (ton/hr) ..... gal/hr
Heat Input = (Process Weight (ton/hr) x Heating .... MMBtu/hr
Value (Btu/gal) x Fuel Use Rate (gal/ton) / 1E6

TOTAL PARTICULATE

15.432 x (FHW + MF + BHW) / [(Vm(std) + Vw(std)] ...	0.0016	gr/scf
15.432 x (FHW + MF + BHW) / (Vm(std)	0.0017	gr/dscf
gr/dscf x (12 / %CO2)	0.0019	@ 0% CO2
gr/dscf x [(20.9 - Oxygen corr.) / (20.9 - %O2)]	0.0022	@ 0% O2
0.00857 x Qs(std) x gr/dscf	22.92	lb/hr
F-Fac x 1.4286E-4 x [20.9 / (20.9-%O2)] x gr/dscf ..		lb/MMBtu
Particulate (lb/hr) / Heat Input (MMBtu/hr)		lb/MMBtu

TOTAL ACID MIST

[1.0811E-4 x (Vt - Vtb) x N x Vsol] / Vol(aloq) . lb Acid Mist
[Acid Mist (lb) / Vm std (ft^3)] x Qs std x 60 ... lb/hr
[Acid Mist (lb) / Vm std (ft^3)] x F-Factor ..... lb/MMBtu

SULFUR DIOXIDE (SO2)

[7.061E-5 x (Vt - Vtb) x N x Vsol] / Vol(aloq) lb SO2
[SO2 (lb) / Vm std (ft^3)] x Qs std (ft^3/min) x 60 ... lb/hr
[SO2 (lb) / Vm std (ft^3)] x F ..... lb/MMBtu
[Mass SO2 (lb) x 385 / 64E+6 (ft^3/lb)] / Vm (std) ppm
ppm x 0.0 % Corr. / 10.5 % CO2 in Stack ..... ppm @ 0% CO2
ppm x (20.9% - 0.0% O2 Corr)/(20.9% - 4.5% O2 Stack) ppm @ 0% O2
SO2 (lb/hr / Heat Input) ..... lb/MMBtu

HYDROGEN CHLORIDE DATA SUMMARY

[Mass HCl(mg) x 385 x 1E6] / [453600 x 36.5 x Vm(std)].. ppm
ppm x 0.0 % Corr. / 10.5 % CO2 in Stack ..... ppm @ 0% CO2
ppm x (20.9% - 0.0% O2 Corr)/(20.9% - 10.5% O2 Stack) ppm @ 0% O2
[Mass HCl(mg) x 60 x Qs / (Vm(std) x 453,600)]..... lb/hr

EMISSION RATE CALCULATIONS

Plant : PROGRESS ENERGY - CRYSTAL RIVER
Source/Unit : UNIT 5
Date: JUNE 5, 2006 RUN NO.: 2
STANDARD TEMP. : 68 F

Front Half Wash (FHW)	0.00060	grams	Vm(std)	46.264	ft3
Mass Filter (MF)	0.00500	grams	Vw(std)	3.907	ft3
Back Half Wash (BHW)	0.00000	grams	Qs(std)	1,587,093	dscfm
Vm(std) SO2		dscf	Bws	0.078	
CO2 CORR. 0.0 %			CO2	10.50	%
O2 CORR.: 0.0 %			O2	4.00	%

F-FACTOR

10E6 x [3.64(%H) + 1.53(%C) + 0.57(%S) + 0.14(%N) - 0.46(%O2)] / (Btu/lb) x [(Tstd + 460)/528] ..... dscf/MMBtu

FUEL USE

Use Rate (gal/ton) * Process Wt. (ton/hr) ..... gal/hr
Heat Input = (Process Weight (ton/hr) x Heating .... MMBtu/hr
Value (Btu/gal) x Fuel Use Rate (gal/ton) / 1E6

TOTAL PARTICULATE

15.432 x (FHW + MF + BHW) / [(Vm(std) + Vw(std)] ...	0.0017	gr/scf
15.432 x (FHW + MF + BHW) / (Vm(std)	0.0019	gr/dscf
gr/dscf x (12 / %CO2)	0.0021	@ 0% CO2
gr/dscf x [(20.9 - Oxygen corr.) / (20.9 - %O2)]	0.0023	@ 0% O2
0.00857 x Qs(std) x gr/dscf	25.41	lb/hr
F-Fac x 1.4286E-4 x [20.9 / (20.9-%O2)] x gr/dscf ..		lb/MMBtu
Particulate (lb/hr) / Heat Input (MMBtu/hr)		lb/MMBtu

TOTAL ACID MIST

[1.0811E-4 x (Vt - Vtb) x N x Vsol] / Vol(aloq) . lb Acid Mist
[Acid Mist (lb) / Vm std (ft^3)] x Qs std x 60 ... lb/hr
[Acid Mist (lb) / Vm std (ft^3)] x F-Factor ..... lb/MMBtu

SULFUR DIOXIDE (SO2)

[7.061E-5 x (Vt - Vtb) x N x Vsol] / Vol(aloq) . lb SO2
[SO2 (lb) / Vm std (ft^3)] x Qs std (ft^3/min) x 60 ... lb/hr
[SO2 (lb) / Vm std (ft^3)] x F ..... lb/MMBtu
[Mass SO2 (lb) x 385 / 64E+6 (ft^3/lb)] / Vm (std) ppm
ppm x 0.0 % Corr. / 10.5 % CO2 in Stack ..... ppm @ 0% CO2
ppm x (20.9% - 0.0% O2 Corr)/(20.9% - 10.5% O2 Stack) ppm @ 0% O2
SO2 (lb/hr / Heat Input) ..... lb/MMBtu

HYDROGEN CHLORIDE DATA SUMMARY

[Mass HCl(mg) x 385 x 1E6] / [453600 x 36.5 x Vm(std)].. ppm
ppm x 0.0 % Corr. / 10.5 % CO2 in Stack ..... ppm @ 0% CO2
ppm x (20.9% - 0.0% O2 Corr)/(20.9% - 10.5% O2 Stack) ppm @ 0% O2
[Mass HCl(mg) x 60 x Qs / (Vm(std) x 453,600)]..... lb/hr

EMISSION RATE CALCULATIONS

Plant : PROGRESS ENERGY - CRYSTAL RIVER
Source/Unit : UNIT 5
Date: JUNE 5, 2006 RUN NO.: 3
STANDARD TEMP. : 68 F

Front Half Wash (FHW)	0.00050	grams	Vm(std)	44.695	ft3
Mass Filter (MF)	0.00470	grams	Vw(std)	4.189	ft3
Back Half Wash (BHW)	0.00000	grams	Qs(std)	1,525,604	dscfm
Vm(std) SO2		dscf	Bws	0.086	
CO2 CORR. 0.0 %			CO2	11.00	%
O2 CORR.: 0.0 %			O2	4.00	%

F-FACTOR

10E6 x [3.64(%H) + 1.53(%C) + 0.57(%S) + 0.14(%N) - 0.46(%O2)] / (Btu/lb) x [(Tstd + 460)/528]		dscf/MMBtu

FUEL USE

Use Rate (gal/ton) * Process Wt. (ton/hr)		gal/hr
Heat Input = (Process Weight (ton/hr) x Heating .... Value (Btu/gal) x Fuel Use Rate (gal/ton) / 1E6		MMBtu/hr

TOTAL PARTICULATE

15.432 x (FHW + MF + BHW) / [(Vm(std) + Vw(std)] ...	0.0016	gr/scf
15.432 x (FHW + MF + BHW) / (Vm(std)	0.0018	gr/dscf
gr/dscf x (12 / %CO2)	0.0020	@ 0% CO2
gr/dscf x [(20.9 - Oxygen corr.) / (20.9 - %O2)]	0.0022	@ 0% O2
0.00857 x Qs(std) x gr/dscf	23.47	lb/hr
F-Fac x 1.4286E-4 x [20.9 / (20.9-%O2)] x gr/dscf ..		lb/MMBtu
Particulate (lb/hr) / Heat Input (MMBtu/hr)		lb/MMBtu

TOTAL ACID MIST

[1.0811E-4 x (Vt - Vtb) x N x Vsol] / Vol(aloq) .		lb Acid Mist
[Acid Mist (lb) / Vm std (ft^3)] x Qs std x 60 ...		lb/hr
[Acid Mist (lb) / Vm std (ft^3)] x F-Factor		lb/MMBtu

SULFUR DIOXIDE (SO2)

[7.061E-5 x (Vt - Vtb) x N x Vsol] / Vol(aloq) .		lb SO2
[SO2 (lb) / Vm std (ft^3)] x Qs std (ft^3/min) x 60 ...		lb/hr
[SO2 (lb) / Vm std (ft^3)] x F		lb/MMBtu
[Mass SO2 (lb) x 385 / 64E+6 (ft^3/lb)] / Vm (std)		ppm
ppm x 0.0 % Corr. / 10.5 % CO2 in Stack		ppm @ 0% CO2
ppm x (20.9% - 0.0% O2 Corr)/(20.9% - 10.5% O2 Stack)		ppm @ 0% O2
SO2 (lb/hr / Heat Input)		lb/MMBtu

HYDROGEN CHLORIDE DATA SUMMARY

[Mass HCl(mg) x 385 x 1E6] / [453600 x 36.5 x Vm(std)]..		ppm
ppm x 0.0 % Corr. / 11.0 % CO2 in Stack		ppm @ 0% CO2
ppm x (20.9% - 0.0% O2 Corr)/(20.9% - 11.0% O2 Stack)		ppm @ 0% O2
[Mass HCl(mg) x 60 x Qs / (Vm(std) x 453,600)].....		lb/hr

SOURCE TEST CALCULATIONS

Plant : PROGRESS ENERGY - CRYSTAL RIVER
Source/Unit : UNIT 5 RUN NO.: 1
Date: JUNE 5, 2006

STD.TEMP, Tstd	=	68	F	STATIC PRESS.,Ps	=	-0.97	in. H2O
METER TEMP, Tm	=	102	F	PITOT COFF., Cp	=	0.840	
STACK TEMP, Ts	=	297.4	F	STACK I.D.	=	308.00	inch
AVG.VEL.HEAD,dP	=	1.390	in. H2O	DUCT LENGTH	=		inch
METER ORIFICE,dH	=	1.77	in. H2O	DUCT WIDTH	=		inch
METER VOL., Vm	=	48.300	Cu.Ft.	STACK AREA, As	=	517.403	Sq.Ft.
METER COFF., Y	=	0.993		TEST TIME	=	60.00	min.
BAR. PRESS., Pb	=	30.13	in.Hg	NOZZLE DIA.	=	0.214	inch
COND.(Vlc)	=	85.0	ml	NOZZLE DIA., An	=	2.5E-04	Sq.Ft.

GAS ANALYSIS	=	4.50	% O2	0.00	% CO
		10.50	% CO2	85.00	% N2

Vm(std) = [(T(std) + 460) / 29.92] x Vm x Y x (Pb + (dH / 13.6)) / (Tm + 460)..... = 45.572 dscf

Vw(std) = (8.9148 x 10e-5) x (Tstd + 460) x Vlc = 4.001 scf

Bws = Vw(std) / (Vm(std) + Vw(std))..... = 0.081 | Lower Bws value used.

Bws @ Saturated Conditions = Vapor Press. of H2O @ Dew Point Temp. / (Ps, in.Hg.) ..... = 1.000

%EA =(%O2 - 0.5%CO)/(0.264%N2 - (%O2-0.5%CO)) x 100 = 25.08

Md =(.44 x %CO2)+(.32 x %O2)+[.28 x (%N2 + %CO)] = 29.86

Ms = (Md x (1-Bws)) + (18.0 x Bws)..... = 28.90

P(stack) = Pbar + (Ps / 13.6) ..... = 30.06 in. Hg

vs = 85.49 x CP x (Sq.Rt.dP) x [Sq.Rt.(Ts + 460) / (Ms x P(stack))] ..... = 79.04 ft/sec

Qs = vs x As x 60 ..... = 2,453,756 acf/min

Qs(std) = Qs x (1-Bws)x((Tstd + 460)/(Ts + 460)) x (P(stack)/29.92) ..... = 1,579,764 dscf/min

I = (Ts+460) x [(0.002669 x Vlc) + (Vm(std) / (T(std) + 460) / 29.92] x 100 / [Time x P(stack) x An x vs x 60] ..... = 99.60 %

SOURCE TEST CALCULATIONS

Plant : PROGRESS ENERGY - CRYSTAL RIVER
Source/Unit : UNIT 5 RUN NO.: 2
Date : JUNE 5, 2006

STD.TEMP, Tstd	=	68	F	STATIC PRESS.,Ps	=	-0.97	in. H2O
METER TEMP, Tm	=	108.92	F	PITOT COFF., Cp	=	0.840	
STACK TEMP, Ts	=	297.8	F	STACK I.D.	=	308.00	inch
AVG.VEL.HEAD,dP	=	1.395	in. H2O	DUCT LENGTH	=		inch
METER ORIFICE,dH	=	1.82	in. H2O	DUCT WIDTH	=		inch
METER VOL., Vm	=	49.630	Cu.Ft.	STACK AREA, As	=	517.403	Sq.Ft.
METER COFF., Y	=	0.993		TEST TIME	=	60.00	min.
BAR. PRESS., Pb	=	30.13	in.Hg	NOZZLE DIA.	=	0.214	inch
COND.(Vlc)	=	83.0	ml	NOZZLE DIA., An	=	2.5E-04	Sq.Ft.

GAS ANALYSIS	=	4.00	% O2	0.00	% CO	
		10.50	% CO2	85.50	% N2	

Vm(std) = [(T(std) + 460) / 29.92] x Vm x Y x
(Pb + (dH / 13.6)) / (Tm + 460)..... = 46.264 dscf

Vw(std) = (8.9148 x 10e-5) x (Tstd + 460) x Vlc = 3.907 scf

Bws = Vw(std) / (Vm(std) + Vw(std))..... = 0.078 | Lower Bws value used.

Bws @ Saturated Conditions = Vapor Press. of H2O
@ Dew Point Temp. / (Ps, in.Hg.) ..... = 1.000

%EA =(%O2 - 0.5%CO)/(0.264%N2 - (%O2-0.5%CO)) x 100 = 21.54

Md =(.44 x %CO2)+(.32 x %O2)+[.28 x (%N2 + %CO)] = 29.84

Ms = (Md x (1-Bws)) + (18.0 x Bws)..... = 28.92

P(stack) = Pbar + (Ps / 13.6) ..... = 30.06 in. Hg

vs = 85.49 x CP x (Sq.Rt.dP) x [Sq.Rt.(Ts + 460)
/ (Ms x P(stack))] ..... = 79.21 ft/sec

Qs = vs x As x 60 ..... = 2,458,907 acf/min

Qs(std) = Qs x (1-Bws)x((Tstd + 460)/(Ts + 460))
x (P(stack)/29.92) ..... = 1,587,093 dscf/min

I = (Ts+460) x [(0.002669 x Vlc) + (Vm(std) /
(T(std) + 460) / 29.92] x 100 / [Time x
P(stack) x An x vs x 60] ..... = 100.64 %

SOURCE TEST CALCULATIONS

Plant : PROGRESS ENERGY - CRYSTAL RIVER
Source/Unit : UNIT 5 RUN NO.: 3
Date : JUNE 5, 2006

STD.TEMP, Tstd =	68	F	STATIC PRESS.,Ps =	-0.97	in. H2O
METER TEMP, Tm =	110.58	F	PITOT COFF., Cp =	0.840	
STACK TEMP, Ts =	297.9	F	STACK I.D. =	308.00	inch
AVG.VEL.HEAD,dP =	1.311	in. H2O	DUCT LENGTH =		inch
METER ORIFICE,dH=	1.71	in. H2O	DUCT WIDTH =		inch
METER VOL., Vm =	48.100	Cu.Ft.	STACK AREA, As =	517.403	Sq.Ft.
METER COFF., Y =	0.993		TEST TIME =	60.00	min.
BAR. PRESS., Pb =	30.13	in.Hg	NOZZLE DIA. =	0.214	inch
COND.(Vlc) =	89.0	ml	NOZZLE DIA., An =	2.5E-04	Sq.Ft.

GAS ANALYSIS =	4.00	% O2	0.00	% CO
	11.00	% CO2	85.00	% N2

Vm(std) = [(T(std) + 460) / 29.92] x Vm x Y x
(Pb + (dH / 13.6)) / (Tm + 460)..... = 44.695 dscf

Vw(std) = (8.9148 x 10e-5) x (Tstd + 460) x Vlc = 4.189 scf

Bws = Vw(std) / (Vm(std) + Vw(std))..... = 0.086 | Lower Bws value used.

Bws @ Saturated Conditions = Vapor Press. of H2O
@ Dew Point Temp. / (Ps, in.Hg.) ..... = 1.000

%EA =(%O2 - 0.5%CO)/(0.264%N2 - (%O2-0.5%CO)) x 100 = 21.69

Md =(.44 x %CO2)+(.32 x %O2)+[.28 x (%N2 + %CO)] = 29.92

Ms = (Md x (1-Bws)) + (18.0 x Bws)..... = 28.90

P(stack) = Pbar + (Ps / 13.6) ..... = 30.06 in. Hg

vs = 85.49 x CP x (Sq.Rt.dP) x [Sq.Rt.(Ts + 460)
/ (Ms x P(stack))] ..... = 76.80 ft/sec

Qs = vs x As x 60 ..... = 2,384,137 acf/min

Qs(std) = Qs x (1-Bws)x((Tstd + 460)/(Ts + 460))
x (P(stack)/29.92) ..... = 1,525,604 dscf/min

I = (Ts+460) x [(0.002669 x Vlc) + (Vm(std) /
(T(std) + 460) / 29.92] x 100 / [Time x
P(stack) x An x vs x 60] ..... = 101.15 %

Carbon Monoxide

KOOGLER & ASSOCIATES, INC.
ENVIRONMENTAL SERVICES

EPA Protocol Gas Analyzer Calibration Data
CO Concentration Instrument Range Setting (0 - 200 ppm CO)
EPA Method 10

Calibration Gas	Conc. (ppmv)	Run No.	Date/Time	Response through Train System Loop (ppmv)	Drift (% of Range)(1)	Accuracy Diff. from Actual (% of Range)(2)
Zero	0.0	R1-Pre	6/5/2006 9:36	-1.51		-0.75
Zero	0.0	R1-Post	6/5/2006 11:25	1.00	1.25	0.50
CO	195.0	R1-Pre	6/5/2006 9:06	194.6		-0.21
CO	99.1	R1-Pre	6/5/2006 9:13	98.5		-0.28
CO	50.2	R1-Pre	6/5/2006 9:29	47.9		-1.15
CO	50.0	R1-Post	6/5/2006 11:33	50.5	1.32	0.26
Zero	0.0	R2-Pre	6/5/2006 11:25	1.00		0.50
Zero	0.0	R2-Post	6/5/2006 12:48	0.00	-0.50	0.00
CO	50.2	R2-Pre	6/5/2006 9:29	50.5		0.16
CO	50.2	R2-Post	6/5/2006 12:55	49.8	-0.38	-0.21
Zero	0.0	R3-Pre	6/5/2006 12:48	0.00		0.00
Zero	0.0	R3-Post	6/5/2006 14:13	-0.13	-0.06	-0.06
CO	50.2	R3-Pre	6/5/2006 12:55	49.8		-0.21
CO	50.2	R3-Post	6/5/2006 14:21	49.9	0.06	-0.15
Zero	0.0	R1-Pre*	6/5/2006 9:36	-1.51		-0.75
Zero	0.0	R3-Post	6/5/2006 14:13	-0.13	0.69	-0.06
CO	50.2	R1-Pre*	6/5/2006 9:29	47.9		-1.15
CO	50.2	R3-Post	6/5/2006 14:21	49.9	1.00	-0.15

Method 10 Performance Specification

Section 6.1 Span = 1.5 x Emission Standard

Cal. Gas ppm	% of Range
195.0	97.50
99.1	49.55
50.2	25.10

Instrument Range Setting (0 - 1200 ppm CO)

(1) Addenda A, Maximum 10 % of Range per 8 Hours
(2) Addenda A, Maximum 2% 0f Range

Linearity ; Method 10, Addenda, B 13

	Response	Actual
zero	-1.51	0.0
Span	194.6	195.0
slope	1.006	=m
y-int	-1.505	=b
R^2	1.000	
	certified conc.	=x
	predicted conc.	=Y

y=m(x)+b

48.98	predicted mid	pre-R1
98.1	predicted low	pre-R1

Mid gas Differences M10, Addenda A

0.54	mid% dif	pre-R1
-0.20	low %dif	pre-R1

Progress Energy , Crystal River Complex
No. 5 FFSG , EU 003
PRB Fuel Burn Trials (Normal Coal Burn baseline Emission Measurements)

Date Time	CO ppmv		
6/5/2006 8:50	5.0		
6/5/2006 8:51	5.8		
6/5/2006 8:52	5.3		
6/5/2006 8:53	2.5		
6/5/2006 8:54	0.5		
6/5/2006 8:55	0.3	<<Zero air	
6/5/2006 8:56	0.3	0.3	<average
6/5/2006 8:57	0.3		
6/5/2006 8:58	2.5		
6/5/2006 8:59	75.5		
6/5/2006 9:00	145.2		
6/5/2006 9:01	170.5		
6/5/2006 9:02	186.1		
6/5/2006 9:03	191.6		
6/5/2006 9:04	192.8		
6/5/2006 9:05	195.1		
6/5/2006 9:06	194.6	<<195 ppm CO	
6/5/2006 9:07	194.6	194.6	<average
6/5/2006 9:08	194.8		
6/5/2006 9:09	182.0		
6/5/2006 9:10	131.4		
6/5/2006 9:11	106.1		
6/5/2006 9:12	100.3		
6/5/2006 9:13	98.8	<<99.1ppm CO	
6/5/2006 9:14	98.3	98.5	<average
6/5/2006 9:15	97.8		
6/5/2006 9:16	66.4		
6/5/2006 9:17	50.9		
6/5/2006 9:18	77.7		
6/5/2006 9:19	85.5		
6/5/2006 9:20	90.3		
6/5/2006 9:21	92.3		
6/5/2006 9:22	94.5		
6/5/2006 9:23	97.3		
6/5/2006 9:24	96.3		
6/5/2006 9:25	77.0		
6/5/2006 9:26	56.4		
6/5/2006 9:27	49.6		
6/5/2006 9:28	48.1		
6/5/2006 9:29	47.9	<<50.2 ppm CO	
6/5/2006 9:30	47.9	47.9	<average
6/5/2006 9:31	47.4		
6/5/2006 9:32	47.1		
6/5/2006 9:33	25.1		
6/5/2006 9:34	1.5		
6/5/2006 9:35	-1.0		
6/5/2006 9:36	-1.5	<<Zero air	
6/5/2006 9:37	-1.5	-1.5	<average

6/5/2006 9:38	-1.5	
6/5/2006 9:39	-1.5	
6/5/2006 10:17	-1.0	<< Start Run 1
6/5/2006 10:18	-0.5	
6/5/2006 10:19	-1.0	
6/5/2006 10:20	-1.3	
6/5/2006 10:21	-1.3	
6/5/2006 10:22	-0.8	
6/5/2006 10:23	-0.8	
6/5/2006 10:24	-0.5	
6/5/2006 10:25	-1.3	
6/5/2006 10:26	-1.0	
6/5/2006 10:27	-0.8	
6/5/2006 10:28	-1.0	
6/5/2006 10:29	-1.3	
6/5/2006 10:30	-0.5	
6/5/2006 10:31	-0.5	
6/5/2006 10:32	-0.5	
6/5/2006 10:33	-0.5	
6/5/2006 10:34	-0.8	
6/5/2006 10:35	-0.8	
6/5/2006 10:36	-0.5	
6/5/2006 10:37	-0.3	
6/5/2006 10:38	-0.5	
6/5/2006 10:39	-0.8	
6/5/2006 10:40	-0.3	
6/5/2006 10:41	-0.8	
6/5/2006 10:42	-1.0	
6/5/2006 10:43	-0.8	
6/5/2006 10:44	-0.5	
6/5/2006 10:45	-1.0	
6/5/2006 10:46	-0.8	
6/5/2006 10:47	-1.0	
6/5/2006 10:48	-0.5	
6/5/2006 10:49	0.3	
6/5/2006 10:50	-0.3	
6/5/2006 10:51	-0.5	
6/5/2006 10:52	-0.5	
6/5/2006 10:53	-0.5	
6/5/2006 10:54	-0.8	
6/5/2006 10:55	-1.0	
6/5/2006 10:56	-0.5	
6/5/2006 10:57	-1.0	
6/5/2006 10:58	-0.8	
6/5/2006 10:59	-1.0	
6/5/2006 11:00	-0.8	
6/5/2006 11:01	-0.8	
6/5/2006 11:02	-0.8	
6/5/2006 11:03	0.0	
6/5/2006 11:04	-0.5	
6/5/2006 11:05	0.0	
6/5/2006 11:06	-0.5	

6/5/2006 11:07	-0.8			
6/5/2006 11:08	-1.3			
6/5/2006 11:09	-0.8			
6/5/2006 11:10	-0.5			
6/5/2006 11:11	-0.5			
6/5/2006 11:12	-1.0			
6/5/2006 11:13	-0.8			
6/5/2006 11:14	-0.5			
6/5/2006 11:15	-0.5			
6/5/2006 11:16	-0.8			
6/5/2006 11:17	-0.5		Run 1 CO ppm	
6/5/2006 11:18	0.0	<< End Run 1	-0.7	Average
6/5/2006 11:19	-0.5			
6/5/2006 11:20	0.5			
6/5/2006 11:21	0.5			
6/5/2006 11:22	0.8			
6/5/2006 11:23	1.0			
6/5/2006 11:24	0.8			
6/5/2006 11:25	1.0	<<Zero air		
6/5/2006 11:26	1.0	1.0	<average	
6/5/2006 11:27	4.3			
6/5/2006 11:28	28.3			
6/5/2006 11:29	41.4			
6/5/2006 11:30	46.4			
6/5/2006 11:31	48.6			
6/5/2006 11:32	50.2			
6/5/2006 11:33	50.4	<<50.2 ppm CO		
6/5/2006 11:34	50.7	50.5	<average	

Progress Energy , Crystal River Complex
No. 5 FFSG , EU 003
PRB Fuel Burn Trials (Normal Coal Burn baseline Emission Measurements)

Date Time	CO ppmv	
6/5/2006 11:40	-0.5	
6/5/2006 11:41	-0.8	
6/5/2006 11:42	-1.0	<< Start Run 2
6/5/2006 11:43	-0.8	
6/5/2006 11:44	0.0	
6/5/2006 11:45	-0.8	
6/5/2006 11:46	-1.0	
6/5/2006 11:47	-0.8	
6/5/2006 11:48	-0.3	
6/5/2006 11:49	-1.0	
6/5/2006 11:50	-0.3	
6/5/2006 11:51	-0.8	
6/5/2006 11:52	-0.8	
6/5/2006 11:53	-0.5	
6/5/2006 11:54	-0.5	
6/5/2006 11:55	-0.5	
6/5/2006 11:56	-0.8	
6/5/2006 11:57	-0.5	
6/5/2006 11:58	-1.0	
6/5/2006 11:59	-1.0	
6/5/2006 12:00	-0.8	
6/5/2006 12:01	-0.8	
6/5/2006 12:02	-0.8	
6/5/2006 12:03	-1.0	
6/5/2006 12:04	-1.0	
6/5/2006 12:05	-1.0	
6/5/2006 12:06	-0.8	
6/5/2006 12:07	-1.0	
6/5/2006 12:08	-1.0	
6/5/2006 12:09	-1.0	
6/5/2006 12:10	-0.8	
6/5/2006 12:11	-1.5	
6/5/2006 12:12	-0.8	
6/5/2006 12:13	-1.0	
6/5/2006 12:14	-1.0	
6/5/2006 12:15	-0.8	
6/5/2006 12:16	-0.8	
6/5/2006 12:17	-0.8	
6/5/2006 12:18	-1.0	
6/5/2006 12:19	-1.3	
6/5/2006 12:20	-0.5	
6/5/2006 12:21	-1.3	
6/5/2006 12:22	-1.0	
6/5/2006 12:23	-1.0	
6/5/2006 12:24	-0.8	
6/5/2006 12:25	-0.5	

6/5/2006 12:26	-0.8			
6/5/2006 12:27	-0.8			
6/5/2006 12:28	-0.5			
6/5/2006 12:29	-1.0			
6/5/2006 12:30	-0.5			
6/5/2006 12:31	-0.5			
6/5/2006 12:32	-0.8			
6/5/2006 12:33	-1.0			
6/5/2006 12:34	-1.0			
6/5/2006 12:35	-1.0			
6/5/2006 12:36	-1.5			
6/5/2006 12:37	-1.0			
6/5/2006 12:38	-1.3			
6/5/2006 12:39	-1.5			
6/5/2006 12:40	-1.3			
6/5/2006 12:41	-1.3		Run 2 CO ppm	
6/5/2006 12:42	-1.0	<< End Run 2	-0.9	Average
6/5/2006 12:43	0.8			
6/5/2006 12:44	5.8			
6/5/2006 12:45	1.3			
6/5/2006 12:46	0.5			
6/5/2006 12:47	0.8			
6/5/2006 12:48	0.0	<<Zero air		
6/5/2006 12:49	0.0	0.0	<average	
6/5/2006 12:50	4.8			
6/5/2006 12:51	30.3			
6/5/2006 12:52	42.9			
6/5/2006 12:53	45.9			
6/5/2006 12:54	48.1			
6/5/2006 12:55	49.6	<<50.2 ppm CO		
6/5/2006 12:56	49.9	49.8	<average	
6/5/2006 12:57	47.9			
6/5/2006 12:58	28.6			
6/5/2006 12:59	3.8			

Progress Energy , Crystal River Complex
No. 5 FFSG , EU 003
PRB Fuel Burn Trials (Normal Coal Burn baseline Emission Measurements)

Date Time	CO ppmv	
6/5/2006 13:05	-1.3	
6/5/2006 13:06	-1.5	
6/5/2006 13:07	-1.0	<< Start Run 3
6/5/2006 13:08	-1.5	
6/5/2006 13:09	-1.3	
6/5/2006 13:10	-1.0	
6/5/2006 13:11	-1.0	
6/5/2006 13:12	-1.3	
6/5/2006 13:13	-1.3	
6/5/2006 13:14	-1.0	
6/5/2006 13:15	-1.5	
6/5/2006 13:16	-1.5	
6/5/2006 13:17	-1.5	
6/5/2006 13:18	-1.3	
6/5/2006 13:19	-1.3	
6/5/2006 13:20	-1.5	
6/5/2006 13:21	-1.3	
6/5/2006 13:22	-1.8	
6/5/2006 13:23	-1.5	
6/5/2006 13:24	-1.5	
6/5/2006 13:25	-1.5	
6/5/2006 13:26	-1.8	
6/5/2006 13:27	-1.8	
6/5/2006 13:28	-1.5	
6/5/2006 13:29	-1.3	
6/5/2006 13:30	-1.3	
6/5/2006 13:31	-1.8	
6/5/2006 13:32	-1.5	
6/5/2006 13:33	-1.5	
6/5/2006 13:34	-1.5	
6/5/2006 13:35	-1.5	
6/5/2006 13:36	-1.5	
6/5/2006 13:37	-1.5	
6/5/2006 13:38	-0.8	
6/5/2006 13:39	-1.5	
6/5/2006 13:40	-1.5	
6/5/2006 13:41	-1.5	
6/5/2006 13:42	-1.8	
6/5/2006 13:43	-1.8	
6/5/2006 13:44	-1.5	
6/5/2006 13:45	-1.5	
6/5/2006 13:46	-1.8	
6/5/2006 13:47	-1.5	
6/5/2006 13:48	-2.0	
6/5/2006 13:49	-1.5	
6/5/2006 13:50	-2.0	
6/5/2006 13:51	-1.3	

6/5/2006 13:52	-1.8			
6/5/2006 13:53	-1.8			
6/5/2006 13:54	-1.5			
6/5/2006 13:55	-1.3			
6/5/2006 13:56	-2.0			
6/5/2006 13:57	-1.8			
6/5/2006 13:58	-1.5			
6/5/2006 13:59	-1.0			
6/5/2006 14:00	-1.3			
6/5/2006 14:01	-1.5			
6/5/2006 14:02	-2.0			
6/5/2006 14:03	-1.8			
6/5/2006 14:04	-1.5			
6/5/2006 14:05	-1.5			
6/5/2006 14:06	-1.5		Run 3 CO ppm	
6/5/2006 14:07	-1.5	<< End Run 3	-1.5	Average
6/5/2006 14:08	-1.8			
6/5/2006 14:09	-1.3			
6/5/2006 14:10	-0.5			
6/5/2006 14:11	-0.8			
6/5/2006 14:12	-0.5			
6/5/2006 14:13	-0.3	<<Zero air		
6/5/2006 14:14	0.0	-0.1	<average	
6/5/2006 14:15	10.8			
6/5/2006 14:16	35.9			
6/5/2006 14:17	43.4			
6/5/2006 14:18	46.1			
6/5/2006 14:19	47.6			
6/5/2006 14:20	49.1			
6/5/2006 14:21	49.9	<<50.2 ppm CO		
6/5/2006 14:22	49.9	49.9	<average	
6/5/2006 14:23	49.4			

Field and Laboratory Data Sheets

KOOGLER & ASSOCIATES, INC.
ENVIRONMENTAL SERVICES

Particulate Matter

KOOGLER & ASSOCIATES, INC.
ENVIRONMENTAL SERVICES

Multiple Methods Data Sheet

Plant: Progress Energy - Crystal River
Sample Location: Unit 5
Control Type: ESP
Sample Type: RP Part
Date: 6-6-06 | Run No.: 1
Time Start: 1017 | Time End: 1124
Sample Time: 5 | min/point 60 Total Mins.
Dry Bulb: °F | Wet Bulb: °F | VP@DP:
Bar. Pres: 30.13 "Hg | Stack Pres: 30.08 "Hg | Ps: -0.97 "H_2O
Moisture: 8 % | FDA: | Gas Density Factor:
Temp: 85 °F | Wind Direction: — | Wind Speed: —
Weather: Clear | Thermocouple Readout: KAK-7
Sample Box No: KA-7 | Meter Box No.: KA-7
Meter Y: 0.993 @ | Delta H: 1.55 | Pitot Corr.: 0.84
Nozzle Diameter: 0.214 inches | Probe Length: 10.24 feet
Probe Heater Setting: 320 | Nomograph Cf: 1.27
Stack Dimensions: 308 inches
Stack Area: 517.4 ft^2
Effective Stack Area: 517.4 ft^2
Stack Height: ft

Stack Dimensions

Umbilical: KAK-100
Thermocouple Probe No. KAK-110
Pitot Tube: KASSI

Material Processing Rate:
Final Gas Meter Reading: 765.300 ft^3
Initial Gas Meter Reading: 717.000 ft^3
Total Metered Gas Volume: 48.300 ft^3
Condensate Gain in Impingers: 74 mL
Weight Gain in Silica Gel: 11 g
Total Moisture Gain: 85 mL
Silica Gel Container No.: 701
Filter Number: 1

Leak Check - Meter Box:
Initial: 0.003 cfm @ 15 inches Hg
Final: 0.000 cfm @ 5 inches Hg

Leak Check - Pitot Tubes:
Impact 3 "H_2O for 15 sec Stable Leak
Static 3 "H_2O for 15 sec Stable Leak

Test Conducted By: R Paul - A West
O_2: 4.5 % | CO_2: 10.5 %
Stack Test Observers:

Port and Traverse Point No.	Distance from Inside Stack Wall (in.)	Clock Time	Gas Meter Reading (ft^3)	Stack Velocity Head (H_2O)	Meter Orifice Pressure Difference (H_2O) Calculated	Meter Orifice Pressure Difference (H_2O) Actual	Stack Gas Temp (°F)	Sample Box Temp (°F)	Last Impinger Temp (°F)	Meter Temp (°F)	Vacuum on Sample Train ("Hg)	Oxygen Meter Reading (%O_2)
1-1			17.0	1.5	1.91	1.91	298		72	96	4	
2			21.2	1.4	1.78	1.78	298		64	97	3	
3			25.3	1.4	1.78	1.78	298		62	98	3	
2-1			29.2	1.4	1.78	1.78	296		66	99	3	
2			33.1	1.4	1.78	1.78	298		60	101	3	
3			37.2	1.4	1.78	1.78	297		59	102	3	
3-1			41.2	1.4	1.78	1.78	297		60	103	3	
2			45.3	1.4	1.78	1.78	298		56	104	3	

KOOGLER & ASSOCIATES, INC
ENVIRONMENTAL SERVICES

Port and Traverse Point No.	Distance from Inside Stack Wall (in.)	Clock Time	Gas Meter Reading (ft^3)	Stack Velocity Head (H_2O)	Meter Orifice Pressure Difference (H_2O)		Stack Gas Temp (°F)	Sample Box Temp (°F)	Last Impinger Temp (°F)	Meter Temp (°F)	Vacuum on Sample Train ("Hg)	Oxygen Meter Reading (%O2)
					Calculated	Actual						
3-3			49.3	1.3	1.65	1.65	297		56	105	3	
4-1			53.2	1.5	1.91	1.91	297		63	106	3	
2			57.3	1.5	1.91	1.91	298		59	106	3	
3			61.5	1.1	1.4	1.4	297		61	107	3	

KOUGLER & ASSOCIATES, INC
ENVIRONMENTAL SERVICES

Multiple Methods Data Sheet

Plant: Progress Energy - Crystal River
Sample Location: Unit 5
Control Type: ESP
Sample Type: RP Part
Date: 6-5-06 | Run No.: 2
Time Start: 1142 | Time End: 1249
Sample Time: 5 | min/point 60 Total Mins.
Dry Bulb: °F | Wet Bulb: °F | VP@DP:
Bar. Pres: 30.12 "Hg | Stack Pres: 30.06 "Hg | Ps: -0.97 "H_2O
Moisture: 8 % | FDA: | Gas Density Factor:
Temp: 85 °F | Wind Direction: — | Wind Speed: —
Weather: Clear | Thermocouple Readout: KAR-7
Sample Box No.: KA-7 | Meter Box No.: KA-7
Meter Y: 0.993 @ | Delta H: 1.55 | Pitot Corr.: 0.84
Nozzle Diameter: 0.41 inches | Probe Length: 10.25 feet
Probe Heater Setting: 320 | Nomograph Cf: 1.3
Stack Dimensions: 308 inches
Stack Area: 517.4 ft^2
Effective Stack Area: 517.4 ft^2
Stack Height: ft

Stack Dimensions

Umbilical: KAR-100
Thermocouple Probe No. KAR-110
Pitot Tube: KA-SSI

Material Processing Rate:
Final Gas Meter Reading: 815.230 ft^3
Initial Gas Meter Reading: 765.600 ft^3
Total Metered Gas Volume: 49.63 ft^3
Condensate Gain in Impingers: 74 mL
Weight Gain in Silica Gel: 9 g
Total Moisture Gain: 83 mL
Silica Gel Container No.: 29
Filter Number: 2

Leak Check - Meter Box:
Initial: 0.001 cfm @ 10 inches Hg
Final: 0.002 cfm @ 5 inches Hg

Leak Check - Pitot Tubes:
Impact 3 "H_2O for 15 sec: Stable / Leak
Static 3 "H_2O for 15 sec: Stable / Leak

Test Conducted By: R Paul - A West
O_2: 4.0 % | CO_2: 10.5 %
Stack Test Observers:

Port and Traverse Point No.	Distance from Inside Stack Wall (in.)	Clock Time	Gas Meter Reading (ft^3)	Stack Velocity Head (H_2O)	Meter Orifice Pressure Difference (H_2O) Calculated	Meter Orifice Pressure Difference (H_2O) Actual	Stack Gas Temp (°F)	Sample Box Temp (°F)	Last Impinger Temp (°F)	Meter Temp (°F)	Vacuum on Sample Train ("Hg)	Oxygen Meter Reading (%O_2)
1-1			65.6	1.4	1.82	1.82	298		74	106	3	
2			69.9	1.4	1.82	1.82	298		63	107	3	
3			74.1	1.1	1.43	1.43	297		59	107	2	
2-1			77.7	1.2	1.56	1.56	299		66	109	3	
2			81.6	1.4	1.82	1.82	299		56	108	3	
3			85.6	1.2	1.56	1.56	297		53	109	3	
3-1			89.5	1.6	2.08	2.08	297		57	109	4	
2			93.9	1.6	2.08	2.08	298		51	110	4	

KOOGLER & ASSOCIATES, INC.
ENVIRONMENTAL SERVICES

Port and Traverse Point No.	Distance from Inside Stack Wall (in.)	Clock Time	Gas Meter Reading (ft^3)	Stack Velocity Head (H_2O)	Meter Orifice Pressure Difference (H_2O)		Stack Gas Temp (°F)	Sample Box Temp (°F)	Last Impinger Temp (°F)	Meter Temp (°F)	Vacuum on Sample Train ("Hg)	Oxygen Meter Reading (%O2)
					Calculated	Actual						
	3-3		98.4	1.6	2.08	2.08	298		53	110	4	
	4-1		802.7	1.5	1.95	1.95	296		58	110	3	
	2		6.9	1.4	1.82	1.82	299		53	111	3	
	3		11.1	1.4	1.82	1.82	298		54	111	3	

KOOGLER & ASSOCIATES, INC
ENVIRONMENTAL SERVICES

Multiple Methods Data Sheet

Plant: Progress Energy-Crystal River
Sample Location: Unit 5
Control Type: ESP
Sample Type: PM Part
Date: 6-6-06 | Run No.: 3
Time Start: 1307 | Time End: 1413
Sample Time: 5 | min/point 60 Total Mins.
Dry Bulb: °F | Wet Bulb: °F | VP@DP:
Bar. Pres: 30.13 "Hg | Stack Pres: 30.06 "Hg | Ps: 0.97 "H_2O
Moisture: 8 % | FDA: | Gas Density Factor:
Temp: 85 °F | Wind Direction: — | Wind Speed: —
Weather: Clear | Thermocouple Readout: KAH-7
Sample Box No. KA-7 | Meter Box No.: KA-7
Meter Y: 0.993 @ | Delta H: 1.55 | Pitot Corr.: 0.84
Nozzle Diameter: 0.214 inches | Probe Length: 10.25 feet
Probe Heater Setting: 320 | Nomograph Cf: 1.3
Stack Dimensions: 308 inches
Stack Area: 517.4 ft^2
Effective Stack Area: 517.4 ft^2
Stack Height: ft

Stack Dimensions

Material Processing Rate:
Final Gas Meter Reading: 863.600 ft^3
Initial Gas Meter Reading: 815.500 ft^3
Total Metered Gas Volume: 48.100 ft^3
Condensate Gain in Impingers: 80 mL
Weight Gain in Silica Gel: 9 g
Total Moisture Gain: 89 mL
Silica Gel Container No.: 39
Filter Number: 3

Leak Check - Meter Box:
Initial 0.002 cfm @ 10 inches Hg
Final 0.000 cfm @ 5 inches Hg
Leak Check - Pitot Tubes:
Impact 3 "H_2O for 15 sec: Stable, Leak
Static 3 "H_2O for 15 sec: Stable, Leak

Umbilical: KAH-100
Thermocouple Probe No. KAH-110
Pitot Tube: KAHSS I
Test Conducted By: RPaul-AWest
O_2: 4.0 % | CO_2: 11.0 %
Stack Test Observers:

Port and Traverse Point No.	Distance from Inside Stack Wall (in.)	Clock Time	Gas Meter Reading (ft^3)	Stack Velocity Head (H_2O)	Meter Orifice Pressure Difference (H_2O) Calculated	Actual	Stack Gas Temp (°F)	Sample Box Temp (°F)	Last Impinger Temp (°F)	Meter Temp (°F)	Vacuum on Sample Train ("Hg)	Oxygen Meter Reading (%O_2)
1-1			15.5	1.3	1.69	1.69	296		75	109	3	
2			19.4	1.3	1.69	1.69	299		60	109	3	
3			23.3	1.1	1.43	1.43	298		58	110	3	
2-1			26.9	1.5	1.95	1.95	297		60	110	3	
2			31.3	1.5	1.95	1.95	299		53	110	3	
3			35.5	1.4	1.82	1.82	298		52	111	3	
3-1			39.6	1.4	1.82	1.82	298		56	111	3	
2			43.8	1.2	1.56	1.56	299		52	111	3	

KOOGLER & ASSOCIATES, INC.
ENVIRONMENTAL SERVICES

Port and Traverse Point No.	Distance from Inside Stack Wall (in.)	Clock Time	Gas Meter Reading (ft^3)	Stack Velocity Head (H_2O)	Meter Orifice Pressure Difference (H_2O)		Stack Gas Temp (°F)	Sample Box Temp (°F)	Last Impinger Temp (°F)	Meter Temp (°F)	Vacuum on Sample Train ("Hg)	Oxygen Meter Reading (%O2)
					Calculated	Actual						
3-3			47.7	1.0	1.3	1.3	297		52	111	3	
4-1			51.3	1.5	1.95	1.95	296		58	111	4	
2			55.5	1.5	1.95	1.95	299		55	112	4	
3			59.8	1.1	1.43	1.43	299		57	112	3	

KOOGLER & ASSOCIATES, INC
ENVIRONMENTAL SERVICES

SAMPLING RATE CALCULATIONS

Date: 6-6-06 RP

Plant Name/Location: Progress Energy Crystal River

Source: Unit 5

1) Calculate the optimum Cf:

$$\Delta H @ / \Delta P_{avg} = Cf$$

ΔH	/ ΔP avg	= Cf

2) Calculate the optimum nozzle size:

Record Values		
R1	R2	R3
90	110	
0.08	0.08	
28.1	28.1	
295		
1.55		
.214		

Tm = Meter Temperature (°F) (Add 5 °F for initial temp.)

Bw = Moisture Fraction

Ms = Wet Molecular Weight of Stack Gas (from Table)

Ts = Stack Temperature (°F)

ΔH@ = Meter Box Constant (box front)

ΔP = Average Pitot Reading (Inches H20)

Dn = Nozzle Diameter (Inches) measured

Moisture Fraction	MS
0	29
0.05	28.5
0.1	27.9
0.15	27.4
0.2	26.8
0.25	26.2
0.3	25.7
0.35	25.2
0.4	24.6

$$Dn = \left[\frac{Cf}{\left(\frac{Tm+460}{MS(Ts+460)}\right) * \left(1 - \frac{Bw}{100}\right)^2 * (\Delta H@) * (1774)} \right]^{0.25}$$

3) Calculate the correction factor Cf. Cf times the stack ΔP will determine the manometer setting ΔH:

$$Cf = \left[\frac{Tm+460}{Ms*(Ts+460)} \right] * (1-Bw)^2 * \Delta H@ * Dn^4 * 1774$$

$$Cf * \Delta P = \Delta H$$

Calculation	Run No. 1		Run No. 2		Run No. 3	
Tm + 460 =	550		570			
/ [MS*(Ts+460)] =	82895					
* (1 - Bw)^2 =	0.8464					
* ΔH@ =	1.55					
* (Dn)^4 =	0.002097					
* 17741 = Cf	1.27		1.3			

Chain of Custody

Plant Name: Progress Energy Project Number: _____

Location: Crystal River Source: Unit 5

Sample Identification	Remarks
1-U5-n	Nozzle Wash Run
2-U5-n	" " " 2
3-U5-n	" " " 3
1	Filter Holder Run
2	" " " 2
3	" " " 3
701	Silica Gel Run
29	" " " 2
39	" " " 3

Sampled by:	RPaul	6-6-06 RP	See data
	Signature	Date	Time
Relinquished by:			
	Signature	Date	Time
Received by:			
	Signature	Date	Time
Relinquished by:			
	Signature	Date	Time

Laboratory:

Received by:	RPaul	6-6-06	10:30
	Signature	Date	Time

Sample Shipped Via: ○ UPS ○ Federal Express ○ Other

Shipping Bill Number: _____

KOOGLER & ASSOCIATES
ENVIRONMENTAL SERVICES

Particulate Lab Data Sheet

Test Date: 6-5-06

Plant Name: PE-Crystal River

Source: Unit 5

	Run No. 1	Run No. 2	Run No. 3	Blank
Container No.	XXX	Z	713	666
Total Volume (ml)	75	75	75	50
Aliquot Evaporated (ml)	75	75	75	50
Final Weight (g)	114.8401	113.8749	112.4788	110.0225
Tare Weight (g)	114.8391	113.8743	112.4783	110.0222
Gross Weight Gained (g)	0.0010	0.0006	0.0005	0.0003
Average Blank (g)	—	—	—	
Net Weight (g)	0.0010	0.0006	0.0005	
Aliquot Factor	x 1.0	x 1.0	x 1.0	x
Total Net Weight (mg)	1.0	0.6	0.5	

Container No.	1-A	2-A	3-A	3-P
Filter No.	4436	4437	4438	4435
Final Weight (g)	0.1258	0.1272	0.1277	0.1224
Tare Weight (g)	0.1218	0.1222	0.1230	0.1228
Gross Weight Gained	0.0040	0.0050	0.0047	-0.0004
Average Blank (g)	—	—	—	
Total Net Weight (mg)	4.0	5.0	4.7	

Tare Balance Check

0.0 ✓ 10.0 ✓
1.0 ✓ 50.0 ✓
5.0 ✓ 100.0 ✓
T/H 77-45

R Paul
Signature

6-2-06
Date

Final Balance Check

0.0 ✓ 10.0 ✓
1.0 ✓ 50.0 ✓
5.0 ✓ 100.0 ✓
T/H 77-43

R Paul
Signature

6-6-06
Date

KOOGLER & ASSOCIATES
ENVIRONMENTAL SERVICES

Carbon Monoxide

KOOGLER & ASSOCIATES, INC.
ENVIRONMENTAL SERVICES

PLANT Progress Energy DATE 06/05/06
LOCATION Crystal River, FL INST. RANGE 0-500 (200)
EMISSION UNIT Unit No. 5 LEAK CHECK 0.0" Hg
TEST Carbon Monoxide M10 NOTES

TIME	GAS	TIME	GAS
08:50	Zero air on		
08:55	Zero air = 0.5		
08:57	195 CO on		
09:05	195 CO = 195.3		
09:08	99.1 CO on		
09:13	99.1 = 99		
09:24	50.2 CO on		
09:28	50.2 CO = 49		
09:31	Zero air on		
09:35	Zero air = -0.05		
10:17	Start Run #1		
11:19	Zero air on End Run #1		
11:24	Zero air = 0		
11:27	50.2 CO on		
11:31	50.2 CO = 48		
11:42	Start Run #2		
12:42	End Run #2		
12:43	Zero air on		
12:47	Zero air = 0.8		
12:50	50.2 CO on		
12:54	50.2 CO = 48		
13:07	Start Run #3		
14:07	End Run #3		
14:08	Zero air on		
14:12	Zero air = 0		
14:15	50.2 CO on		
14:20	50.2 CO = 48.3		

Sampling Equipment Calibration Records

KOOGLER & ASSOCIATES, INC.
ENVIRONMENTAL SERVICES

Nozzle Calibration

Date: 6-5-06 RP

Plant Name: Progress Energy

Location: Crystal River

Source: Unit 5

Measurement Number	Inside Diameter (inches)
1	0.215
2	0.213
3	0.214
Average	0.214
Area of Nozzle	0.000249 Ft.^{2}

Calibrated by: R Paul

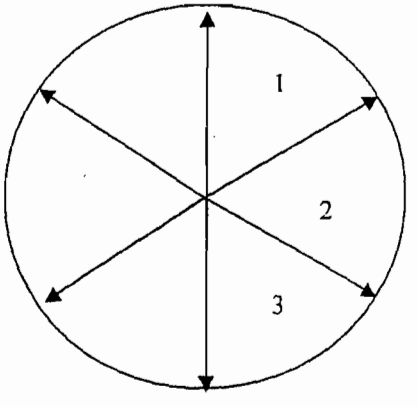

Nozzle X-Section

KOOGLER & ASSOCIATES
ENVIRONMENTAL SERVICES

Pitot Tube Calibration Measurements

Pitot Tube Identification Number: SSI

Date Calibrated: 12-15-05

Pitot Tube Assembly Level: Yes ☐ No ☐

Pitot Tube Openings Damaged: Yes ☐ No ☑; If yes, please explain: _____

Dt_A = 0.371 in. (Dt_A = 0.1875 - 0.3750 in.)

Dt_B = 0.372 in. (Dt_B = 0.1875 - 0.3750 in.)

α_A = 1.5° (<10°) α_B = 1.5° (<10°)

β_A = 2.5° (<5°) β_B = 1.5° (<5°)

γ = 0.5°, θ = 0.5°,

P_A = 0.465 (P_A = 1.05 Dt to 1.50 Dt)

P_B = 0.466 (P_B = 1.05 Dt to 1.50 Dt)

$P_A + P_B = A$ = 0.930 [A = 2x(1.05 Dt to 1.50 Dt)]

Z = A SIN γ = <0.01 in. (<0.125 in.)

W = A SIN θ = <0.01 in. (<0.031 in.)

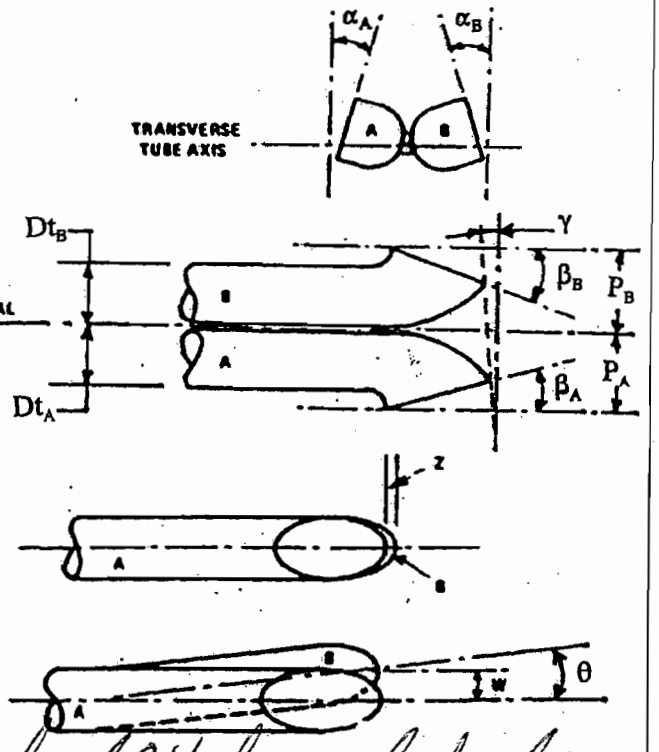

Comments: Pitot tubes looked OK day of test

Calibration required? Yes ☐ No ☐

Calibrated by: R Paul

KAForms: Pitot Tube Calibration Measurements
jhm,10/23/01

Post Test Thermocouple Calibration

Date: 6-~~5~~ RP-06

Plant Name: Progress Energy

Location: Crystal River

Source: Unit 5

Thermocouple Readout No.	KAK-7
Umbilical Cord No.	KAK-100
Switch Box No.	KAK-7
Thermocouple No.	KAK-110
Average Stack Temperature °F	298
* Observed Mercury in Glass (ASTM) °F	298
Observed Thermocouple Reading °F	298

* Observed temperature must be within ten percent of the average stack temperature.

Percent Difference $\frac{(\text{ASTM} + 460) - (\text{Thermo} + 460)}{(\text{ASTM} + 460)} \times 100 =$ 0.0%

Tolerance ≤ 1.5%

Signature: R Paul

KOOGLER & ASSOCIATES
ENVIRONMENTAL SERVICES

POST-TEST DRY GAS METER CALIBRATION USING CRITICAL ORIFICES

Koogler & Associates
Environmental Services

1) *Select one critical orifice to calibrate the dry gas meter which represents the observed operating range.*
2) Record barometric pressure before and after calibration procedure.
3) Run at tested vacuum (from Orifice Calibration Report), for a period of time necessary to achieve a minimum total volume of 5 cubic feet.
4) Record readings in outlined boxes below, other columns are automatically calculated.

COMPANY: Progress Energy
SOURCE: Unit#5
DATE: 6/5/06
PRETEST Y: 0.993

METER SERIAL #: KA-7
CRITICAL ORIFICE SERIAL #: 1376-22

	INITIAL	FINAL	AVG (P_{bar})
BAROMETRIC PRESSURE (in Hg):	29.92	29.92	29.92

RUN NO.	ORIFICE NO.	K' FACTOR (AVG)	TESTED VACUUM (in Hg)	DGM READINGS (FT³) INITIAL	DGM READINGS (FT³) FINAL	NET (V_m)	TEMPERATURES °F AMBIENT	DGM INLET INITIAL	DGM INLET FINAL	DGM OUTLET INITIAL	DGM OUTLET FINAL	DGM AVG	ELAPSED TIME (MIN)	DGM ΔH (in H_2O)	(1) V_m (STD)	(2) V_{cr} (STD)	(3) Y	(4) $\Delta H_@$
1	22	0.5836	18	863.927	870.011	6.084	76	77	78	78	78	78	8.0	1.6	6.00	6.04	1.006	1.581
2	22	0.5836	18	870.011	875.365	5.354	77	78	79	79	79	79	7.0	1.6	5.27	5.28	1.001	1.584
3	22	0.5836	18	875.365	882.259	6.894	78	79	80	79	80	80	9.0	1.6	6.77	6.78	1.000	1.587
																AVG =	1.003	

USING THE CRITICAL ORIFICES AS CALIBRATION STANDARDS:
The following equations are used to calculate the standard volumes of air passed through the DGM, V_m (std), and the critical orifice, V_{cr} (std), and the DGM calibration factor, Y. These equations are automatically calculated in the spreadsheet above.

(1) $$V_m(std) = K_1 V_m Y \left[\frac{P_{bar} + \left(\Delta H / 136\right)}{T_m} \right]$$

(2) $$V_{cr}(std) = K' \left[\frac{P_{bar}\,\theta}{\sqrt{T_{amb}}} \right]$$

(3) $$Y = \frac{V_{cr}(std)}{V_m(std)}$$

(4) $$\Delta H_@ = \left(\frac{0.75 * \theta}{V_{CR}(sdt)} \right)^2 * \Delta H$$

V_m(std) = Net volume of gas sample passed through DGM, corrected to standard conditions.
K_1 = 17.64 °R/in. Hg
Y = DGM calibration factor
V_{cr} (std) = Volume of gas sample passed through the critical orifice, corrected to standard conditions.
Pbar = Barometric pressure at the sampling site (in. Hg).
ΔH = Orifice pressure differential (in. H2O).
θ = Total smapling time (min.)
T_m = Absolute DGM avg. temperature °R
T_{amb} = Absolute ambient temperature °R
K' = Average K' factor from Critical Orifice Calibration

AVERAGE DRY GAS METER CALIBRATION FACTOR, Y =	1.003
AVERAGE DELTA Y=	0.010
DELTA Y LIMIT =	0.05
IS TEST WITHIN 5%?	YES

BEST AVAILABLE COPY

FIELD DATA SHEET: POST-TEST DRY GAS METER CALIBRATION USING CRITICAL ORIFICES

Koogler & Associates Environmental Services

1) Select one critical orifice to calibrate the dry gas meter which approximates the test average delta H range.
2) Record barometric pressure before and after calibration procedure.
3) Run at tested vacuum (from Orifice Calibration Report), for a period of time necessary to achieve a minimum total volume of 5 cubic feet.
4) Record readings in outlined boxes below.

COMPANY: Progress Energy "Crystal River"
SOURCE: Unit #3
TEST DATE: 6/5/06
METER Y: 0.993
AVG. DELTA H: 1.55

METER SERIAL #: KA-7
CRITICAL ORIFICE SERIAL #: 1376-22

	INITIAL	FINAL
BAROMETRIC PRESSURE (in Hg):	29.92	29.92

RUN	ORIFICE NO.	K' FACTOR (AVG)	TESTED VACUUM (in Hg)	DGM READINGS (FT^3) INITIAL	DGM READINGS (FT^3) FINAL	TEMPERATURES °F AMBIENT	DGM INLET INITIAL	DGM INLET FINAL	DGM OUTLET INITIAL	DGM OUTLET FINAL	ELAPSED TIME (MIN)	DGM ΔH (in H_2O)
1	22	0.5836	18	863.927	870.011	76	77	78	77	78	8.0	1.6
2	22	0.5836	18	870.011	875.365	77	78	79	78	79	7.0	1.6
3	22	0.5836	18	875.365	882.259	78	79	80	79	80	9.0	1.6

Test Conducted by: ADAM WEST
Signature: Adam West
Date: 6/6/06

METHOD 5 DRY GAS METER CALIBRATION USING CRITICAL ORIFICES

Quality - Service - Reliability

ENVIRONMENTAL SUPPLY COMPANY

1) Select three critical orifices to calibrate the dry gas meter which bracket the expected operating range.
2) Record barometric pressure before and after calibration procedure.
3) Run at tested vacuum (from Orifice Calibration Report), for a period of time necessary to achieve a minimum total volume of 5 cubic feet.
4) Record data and information in the **GREEN** cells, YELLOW cells are calculated.

DATE: 5-16-06

METER PART #: KA=7

METER SERIAL #: KA-7

CRITICAL ORIFICE SET SERIAL #: 1376

BAROMETRIC PRESSURE (in Hg):	INITIAL	FINAL	AVG (P_{bar})
	29.94	29.94	29.94

IF Y VARIATION EXCEEDS 2.00%, ORIFICE SHOULD BE RECALIBRATED

ORIFICE #	RUN #	K' FACTOR (AVG)	TESTED VACUUM (in Hg)	DGM READINGS (FT^3) INITIAL	DGM READINGS (FT^3) FINAL	DGM READINGS (FT^3) NET (V_m)	TEMPERATURES °F AMBIENT	DGM INLET INITIAL	DGM INLET FINAL	DGM OUTLET INITIAL	DGM OUTLET FINAL	DGM AVG	ELAPSED TIME (MIN) θ	DGM ΔH (in H_2O)	(1) V_m (STD)	(2) V_{cr} (STD)	(3) Y	Y VARIATION (%)	$\Delta H_@$
17	1	0.4505	18	667.90	674.506	6.606	77	79	79	79	79	79	11.00	0.94	6.4916	6.4044	0.987		1.53
	2	0.4505	18	674.506	681.70	7.194	77	79	80	79	80	79.5	12.00	0.94	7.0629	6.9866	0.989		1.53
	3	0.4505	18	681.70	688.618	6.918	77	80	80	80	80	80	11.50	0.94	6.7856	6.6955	0.987		1.53
																AVG =	0.987	-0.52	
22	1	0.5836	18	617.602	622.955	5.353	75	72	73	72	73	72.5	7.00	1.6	5.3332	5.2895	0.992		1.57
	2	0.5836	18	622.955	630.241	7.286	75	73	74	73	74	73.5	9.50	1.6	7.2454	7.1786	0.991		1.57
	3	0.5836	18	630.241	636.366	6.125	75	74	75	74	75	74.5	8.00	1.6	6.0794	6.0451	0.994		1.56
																AVG =	0.992	-0.04	
26	1	0.7142	18	688.90	696.396	7.496	75	77	77	77	77	77	8.00	2.4	7.4201	7.3979	0.997		1.56
	2	0.7142	18	696.396	707.258	10.862	75	77	78	77	78	77.5	11.50	2.4	10.7420	10.6345	0.990		1.56
	3	0.7142	18	707.396	716.229	8.833	75	78	79	78	79	78.5	9.50	2.4	8.7192	8.7850	1.008		1.56
																AVG =	0.998	0.56	

USING THE CRITICAL ORIFICES AS CALIBRATION STANDARDS:

The following equations are used to calculate the standard volumes of air passed through the DGM, V_m (std), and the critical orifice, V_{cr} (std), and the DGM calibration factor, Y. These equations are automatically calculated in the spreadsheet above.

AVERAGE DRY GAS METER CALIBRATION FACTOR, Y = 0.993

AVERAGE $\Delta H_@$ = 1.55

(1) $$Vm_{(std)} = K_1 * Vm * \frac{Pbar + (\Delta H / 13.6)}{Tm}$$

= Net volume of gas sample passed through DGM, corrected to standard conditions

K_1 = 17.64 °R/in. Hg (English), 0.3858 °K/mm Hg (Metric)

T_m = Absolute DGM avg. temperature (°R - English, °K - Metric)

(2) $$Vcr_{(std)} = K' * \frac{Pbar * \Theta}{\sqrt{Tamb}}$$

= Volume of gas sample passed through the critical orifice, corrected to standard conditions

T_{amb} = Absolute ambient temperature (°R - English, °K - Metric)

K' = Average K' factor from Critical Orifice Calibration

(3) $$Y = \frac{Vcr_{(std)}}{Vm_{(std)}}$$

= DGM calibration factor

$$\Delta H_@ = \left(\frac{0.75\,\theta}{V_{cr}(std)}\right)^2 \Delta H \left(\frac{V_m(std)}{V_m}\right)$$

KOOGLER & ASSOCIATES, Inc.
THERMOCOUPLE CALIBRATION

"K" TYPE											
	Ice			Ambient			Hot Oil				
Probe ID	NIST (F°)	Probe (F°)	% Δ	NIST (F°)	Probe (F°)	% Δ	NIST (F°)	Probe (F°)	% Δ	Average % Δ	Average Δ (F°)
KAK-5	Missing										
KAK-7	32	33	-3.1	74	76	-2.7	251	251	0.0	-1.9	1.0
KAK-8	32	33	-3.1	73	74	-1.4	251	250	0.4	-1.4	0.3
KAK-9	32	33	-3.1	72	74	-2.8	257	257	0.0	-2.0	1.0
KAK-10	32	33	-3.1	74	76	-2.7	251	252	-0.4	-2.1	1.3
KAK-11	32	34	-6.3	73	73	0.0	274	274	0.0	-2.1	0.7
KAK-12	Missing										
KAK-20	32	33	-3.1	72	74	-2.8	271	271	0.0	-2.0	1.0
KAK-33	32	34	-6.3	74	73	1.4	265	265	0.0	-1.6	0.3
KAK-35	32	34	-6.3	74	74	0.0	260	260	0.0	-2.1	0.7
KAK-36	32	34	-6.3	72	73	-1.4	276	277	-0.4	-2.7	1.3
KAK-38	32	34	-6.3	74	75	-1.4	275	275	0.0	-2.5	1.0
KAK-50	32	33	-3.1	75	76	-1.3	275	274	0.4	-1.4	0.3
KAK-51	32	34	-6.3	73	75	-2.7	271	272	-0.4	-3.1	1.7
KAK-52	32	34	-6.3	72	72	0.0	276	276	0.0	-2.1	0.7
KAK-55	32	32	0.0	71	73	-2.8	276	276	0.0	-0.9	0.7
KAK-60	32	34	-6.3	73	74	-1.4	264	265	-0.4	-2.7	1.3
KAK-61	32	34	-6.3	73	72	1.4	267	268	-0.4	-1.8	0.7
KAK-63	32	34	-6.3	73	74	-1.4	273	274	-0.4	-2.7	1.3
KAK-65	32	33	-3.1	72	72	0.0	277	280	-1.1	-1.4	1.3
KAK-71	32	34	-6.3	75	76	-1.3	279	281	-0.7	-2.8	1.7
KAK-72	32	33	-3.1	72	74	-2.8	275	277	-0.7	-2.2	1.7
KAK-76	32	35	-9.4	73	75	-2.7	275	275	0.0	-4.0	1.7
KAK-110	32	33	-3.1	72	71	1.4	276	276	0.0	-0.6	0.0
KAK-112	32	33	-3.1	72	73	-1.4	275	274	0.4	-1.4	0.3
KAK-72-A	32	33	-3.1	72	74	-2.8	275	277	-0.7	-2.2	1.7

DATE: 8/16/2005
TESTER: G.Haven and E.Thomas

Airgas

Certificate of Analysis: EPA Protocol Gas Mixture

Airgas Specialty Gases
600 Union Landing Road
Riverton, NJ 08077
(856) 829-7878
Fax (856) 829-0571
www.airgas.com

Cylinder Number:	SG9114880	Reference Number:	82-124051838-1
Cylinder Pressure:	2000.6 PSIG	Expiration Date:	12/9/2008
Certification Date:	12/9/2005	Laboratory:	ASG - Riverton - NJ

Certified Concentrations

Component	Concentration	Accuracy	Analytical Principle	Procedure
PROPANE	49.2 PPM	+/- 1%	FID	G1
CARBON MONOXIDE	50.15 PPM	+/- 1%	NDIR	G1
NITROGEN	Balance			

Certification performed in accordance with "EPA Traceability Protocol (Sept. 1997)" using the assay procedures listed. Analytical Methodology does not require correction for analytical interferences.

Notes:

Do not use cylinder below 150 psig.

Approval Signature _____

Reference Standard Information

Type	Balance Gas	Component	Cyl.Number	Concentration
NTRM 81678	NITROGEN	CARBON MONOXIDE	XC013124B	49.59 PPM
NTRM 81667	AIR	PROPANE	XC019582B	48.1 PPM

Analytical Results

1st Component — PROPANE

1st Analysis Date: 12/02/2005

R 15183	S 15573	Z 0000	Conc 49.3 PPM
S 15571	Z 0000	R 15177	Conc 49.3 PPM
Z 0000	R 15220	S 15522	Conc 49.1 PPM
			AVG: 49.2 PPM

2nd Component — CARBON MONOXIDE

1st Analysis Date: 12/02/2005

R 5.113	S 5.154	Z 1.039	Conc 50.01 PPM
S 5.156	Z 1.041	R 5.113	Conc 50.03 PPM
Z 1.036	R 5.111	S 5.158	Conc 50.08 PPM
			AVG: 50.04 PPM

2nd Analysis Date: 12/09/2005

R 4.969	S 5.028	Z 1.010	Conc 50.31 PPM
S 5.028	Z 1.019	R 4.973	Conc 50.27 PPM
Z 1.018	R 4.976	S 5.029	Conc 50.24 PPM
			AVG: 50.27 PPM

#5000

Airgas

Certificate of Analysis: EPA Protocol Gas Mixture

Airgas Specialty Gases
600 Union Landing Road
Riverton, NJ 08077
(856) 829-7878
Fax (856) 829-0571
www.airgas.com

Cylinder Number:	CC16342	Reference Number:	82-124051837-1
Cylinder Pressure:	2000.6 PSIG	Expiration Date:	12/9/2008
Certification Date:	12/9/2005	Laboratory:	ASG - Riverton - NJ

Certified Concentrations

Component	Concentration	Accuracy	Analytical Principle	Procedure
CARBON MONOXIDE	99.1 PPM	+/- 1%	NDIR	G1
PROPANE	99.4 PPM	+/- 1%	FID	G1
NITROGEN	Balance			

Certification performed in accordance with "EPA Traceability Protocol (Sept. 1997)" using the assay procedures listed. Analytical Methodology does not require correction for analytical interferences.

Notes:

Do not use cylinder below 150 psig.

Approval Signature C. Carabello

Reference Standard Information

Type	Balance Gas	Component	Cyl.Number	Concentration
NTRM 81679	NITROGEN	CARBON MONOXIDE	CC97637	98.0 PPM
NTRM 81668	AIR	PROPANE	XC003536B	93.9 PPM

Analytical Results

1st Component PROPANE

1st Analysis Date: 12/02/2005

R 29551	S 31353	Z 0000	Conc 99.5 PPM
S 31330	Z 0000	R 29588	Conc 99.5 PPM
Z 0000	R 29586	S 31294	Conc 99.4 PPM
			AVG: 99.4 PPM

2nd Component CARBON MONOXIDE

1st Analysis Date: 12/02/2005

R 2.915	S 2.938	Z 1.003	Conc 99.1 PPM
S 2.937	Z 1.024	R 2.915	Conc 99.1 PPM
Z 1.025	R 2.915	S 2.938	Conc 99.1 PPM
			AVG: 99.1 PPM

2nd Analysis Date: 12/09/2005

R 2.940	S 2.960	Z 0.998	Conc 99.0 PPM
S 2.961	Z 1.018	R 2.942	Conc 98.9 PPM
Z 1.020	R 2.940	S 2.967	Conc 99.4 PPM
			AVG: 99.1 PPM

Airgas

Certificate of Analysis: EPA Protocol Gas Mixture

Airgas Specialty Gases
600 Union Landing Road
Riverton, NJ 08077
(856) 829-7878
Fax (856) 829-0571
www.airgas.com

Cylinder Number:	CC218888	Reference Number:	82-124049491-1
Cylinder Pressure:	2000.6 PSIG	Expiration Date:	11/8/2008
Certification Date:	11/8/2005	Laboratory:	ASG - Riverton - NJ

Certified Concentrations

Component	Concentration	Accuracy	Analytical Principle	Procedure
CARBON MONOXIDE	195.0 PPM	+/- 1%	NDIR	G1
PROPANE	202 PPM	+/- 1%	FID	G1
NITROGEN	Balance			

Certification performed in accordance with "EPA Traceability Protocol (Sept. 1997)" using the assay procedures listed. Analytical Methodology does not require correction for analytical interferences.

Notes:

Do not use cylinder below 150 psig.

Approval Signature C. Carabella

Reference Standard Information

Type	Balance Gas	Component	Cyl.Number	Concentration
NTRM 82636	NITROGEN	CARBON MONOXIDE	XC014219B	246.2 PPM
NTRM 81668	AIR	PROPANE	XC003536B	93.9 PPM

Analytical Results

1st Component — PROPANE

1st Analysis Date: 11/03/2005

R 30674	S 65836	Z 0	Conc 202 PPM
S 65852	Z 0	R 30648	Conc 202 PPM
Z 0	R 30645	S 65825	Conc 202 PPM
			AVG: 202 PPM

2nd Component — CARBON MONOXIDE

1st Analysis Date: 11/01/2005

R 1.978	S 1.777	Z 0.999	Conc 195.2 PPM
S 1.778	Z 1.002	R 1.978	Conc 195.4 PPM
Z 1.002	R 1.978	S 1.776	Conc 194.9 PPM
			AVG: 195.1 PPM

2nd Analysis Date: 11/08/2005

R 1.965	S 1.767	Z 0.999	Conc 195.3 PPM
S 1.768	Z 1.000	R 1.966	Conc 195.3 PPM
Z 0.997	R 1.968	S 1.765	Conc 194.1 PPM
			AVG: 194.9 PPM

Airgas

Certificate of Analysis: EPA Protocol Gas Mixture

Airgas Specialty Gases
600 Union Landing Road
Riverton, NJ 08077
(856) 829-7878
Fax (856) 829-0571
www.airgas.com

Cylinder Number:	SG9114880	Reference Number:	82-124051838-1
Cylinder Pressure:	2000.6 PSIG	Expiration Date:	12/9/2008
Certification Date:	12/9/2005	Laboratory:	ASG - Riverton - NJ

Certified Concentrations

Component	Concentration	Accuracy	Analytical Principle	Procedure
PROPANE	49.2 PPM	+/- 1%	FID	G1
CARBON MONOXIDE	50.15 PPM	+/- 1%	NDIR	G1
NITROGEN	Balance			

Certification performed in accordance with "EPA Traceability Protocol (Sept. 1997)" using the assay procedures listed. Analytical Methodology does not require correction for analytical interferences.

Notes:

Do not use cylinder below 150 psig.

Approval Signature

Reference Standard Information

Type	Balance Gas	Component	Cyl.Number	Concentration
NTRM 81678	NITROGEN	CARBON MONOXIDE	XC013124B	49.59 PPM
NTRM 81667	AIR	PROPANE	XC019582B	48.1 PPM

Analytical Results

1st Component — PROPANE

1st Analysis Date: 12/02/2005

R 15183	S 15573	Z 0000	Conc 49.3 PPM
S 15571	Z 0000	R 15177	Conc 49.3 PPM
Z 0000	R 15220	S 15522	Conc 49.1 PPM
			AVG: 49.2 PPM

2nd Component — CARBON MONOXIDE

1st Analysis Date: 12/02/2005

R 5.113	S 5.154	Z 1.039	Conc 50.01 PPM
S 5.156	Z 1.041	R 5.113	Conc 50.03 PPM
Z 1.036	R 5.111	S 5.158	Conc 50.08 PPM
			AVG: 50.04 PPM

2nd Analysis Date: 12/09/2005

R 4.969	S 5.028	Z 1.010	Conc 50.31 PPM
S 5.028	Z 1.019	R 4.973	Conc 50.27 PPM
Z 1.018	R 4.976	S 5.029	Conc 50.24 PPM
			AVG: 50.27 PPM

Airgas

Certificate of Analysis: EPA Protocol Gas Mixture

Airgas Specialty Gases
600 Union Landing Road
Riverton, NJ 08077
(856) 829-7878
Fax (856) 829-0571
www.airgas.com

Cylinder Number:	CC16342	Reference Number:	82-124051837-1
Cylinder Pressure:	2000.6 PSIG	Expiration Date:	12/9/2008
Certification Date:	12/9/2005	Laboratory:	ASG - Riverton - NJ

Certified Concentrations

Component	Concentration	Accuracy	Analytical Principle	Procedure
CARBON MONOXIDE	99.1 PPM	+/- 1%	NDIR	G1
PROPANE	99.4 PPM	+/- 1%	FID	G1
NITROGEN	Balance			

Certification performed in accordance with "EPA Traceability Protocol (Sept. 1997)" using the assay procedures listed. Analytical Methodology does not require correction for analytical interferences.

Notes:

Do not use cylinder below 150 psig.

Approval Signature C. Caballero

Reference Standard Information

Type	Balance Gas	Component	Cyl.Number	Concentration
NTRM 81679	NITROGEN	CARBON MONOXIDE	CC97637	98.0 PPM
NTRM 81668	AIR	PROPANE	XC003536B	93.9 PPM

Analytical Results

1st Component PROPANE

1st Analysis Date: 12/02/2005

R 29551	S 31353	Z 0000	Conc 99.5 PPM
S 31330	Z 0000	R 29588	Conc 99.5 PPM
Z 0000	R 29586	S 31294	Conc 99.4 PPM
			AVG: 99.4 PPM

2nd Component CARBON MONOXIDE

1st Analysis Date: 12/02/2005

R 2.915	S 2.938	Z 1.003	Conc 99.1 PPM
S 2.937	Z 1.024	R 2.915	Conc 99.1 PPM
Z 1.025	R 2.915	S 2.938	Conc 99.1 PPM
			AVG: 99.1 PPM

2nd Analysis Date: 12/09/2005

R 2.940	S 2.960	Z 0.998	Conc 99.0 PPM
S 2.961	Z 1.018	R 2.942	Conc 98.9 PPM
Z 1.020	R 2.940	S 2.967	Conc 99.4 PPM
			AVG: 99.1 PPM

Airgas

Certificate of Analysis: EPA Protocol Gas Mixture

Airgas Specialty Gases
600 Union Landing Road
Riverton, NJ 08077
(856) 829-7878
Fax (856) 829-0571
www.airgas.com

Cylinder Number:	CC218888	Reference Number:	82-124049491-1
Cylinder Pressure:	2000.6 PSIG	Expiration Date:	11/8/2008
Certification Date:	11/8/2005	Laboratory:	ASG - Riverton - NJ

Certified Concentrations

Component	Concentration	Accuracy	Analytical Principle	Procedure
CARBON MONOXIDE	195.0 PPM	+/- 1%	NDIR	G1
PROPANE	202 PPM	+/- 1%	FID	G1
NITROGEN	Balance			

Certification performed in accordance with "EPA Traceability Protocol (Sept. 1997)" using the assay procedures listed. Analytical Methodology does not require correction for analytical interferences.

Notes:

Do not use cylinder below 150 psig.

Approval Signature C. Carabella

Reference Standard Information

Type	Balance Gas	Component	Cyl.Number	Concentration
NTRM 82636	NITROGEN	CARBON MONOXIDE	XC014219B	246.2 PPM
NTRM 81668	AIR	PROPANE	XC003536B	93.9 PPM

Analytical Results

1st Component — PROPANE

1st Analysis Date: 11/03/2005

R 30674	S 65836	Z 0	Conc 202 PPM
S 65852	Z 0	R 30648	Conc 202 PPM
Z 0	R 30645	S 65825	Conc 202 PPM
			AVG: 202 PPM

2nd Component — CARBON MONOXIDE

1st Analysis Date: 11/01/2005

R 1.978	S 1.777	Z 0.999	Conc 195.2 PPM
S 1.778	Z 1.002	R 1.978	Conc 195.4 PPM
Z 1.002	R 1.978	S 1.776	Conc 194.9 PPM
			AVG: 195.1 PPM

2nd Analysis Date: 11/08/2005

R 1.965	S 1.767	Z 0.999	Conc 195.3 PPM
S 1.768	Z 1.000	R 1.966	Conc 195.3 PPM
Z 0.997	R 1.968	S 1.765	Conc 194.1 PPM
			AVG: 194.9 PPM

Plant Operating Data

KOOGLER & ASSOCIATES, INC.
ENVIRONMENTAL SERVICES

Progress Energy
Unit 5

DATE: 6/5/06	**Run 1**	Tons Coal 02	Tons Coal 03	Tons Coal 04	Tons Coal 05	Tons Coal 06	Tons Coal 07	Tons Coal 1-6	**Tons/hr Coal 1-5**	
time start	10:13	30515	314875	407796	258416	448497	438810			
time stop	11:25	30576	314935	407854	258476	448558	438872	Total	**Total**	**MMBTU/Hr**
Total	1:12	61.0	60.0	58.0	60.0	61.0	62.0	362.0	**301.67**	**6870**

DATE: 6/5/06	**Run 2**	Tons Coal 02	Tons Coal 03	Tons Coal 04	Tons Coal 05	Tons Coal 06	Tons Coal 07	Tons Coal 1-5	**Tons/hr Coal 1-5**	
time start	11:42	30583	314943	407861	258481	448563	438877			
time stop	12:45	30632	314991	407908	258530	448612	438927	Total	**Total**	**MMBTU/Hr**
Total	1:03	49.0	48.0	47.0	49.0	49.0	50.0	292.0	**278.10**	**6333**

DATE: 6/5/06	**Run 3**	Tons Coal 02	Tons Coal 03	Tons Coal 04	Tons Coal 05	Tons Coal 06	Tons Coal 07	Tons Coal 1-5	**Tons/hr Coal 1-5**	
time start	13:07	30644	315003	407920	258542	448624	438939			
time stop	14:10	30693	315052	407968	258591	448673	438989	Total	**Total**	**MMBTU/Hr**
Total	1:03	49.0	49.0	48.0	49.0	49.0	50.0	294.0	**280.00**	**6376**

AVE. % Capacity
97.92

S.L.	Sampler # 4				Jun-06					As Bunkered Samples														
Date	Lab #	Mech Hand	Type A/D	# Samp	I.D. Shift	#/1000 Tons	Tonnage	Moisture	Ash	Volatile Matter	Fixed Carbon	Sulfur	BTU/LB	Lbs SO2 /MBTU	MAF BTU	Dry Ash	Dry Sul	Dry Btu	Dry Vol	WT X M	WT X A	WT X V	WT X S	WT X BTU
						#VALUE!																		
4 06/05/06	64324	M	D	70	00:01-08:0	19.5	3,591	9.47	9.08	33.88	47.57	0.67	12004	1.12	14738	10.03	0.74	13260	37.42	34007	32606	121663	2406	43106364
	64325	M	D	50	08:00-16:0	19.3	2,597	14.74	8.07	30.31	46.88	0.68	11386	1.19	14751	9.47	0.80	13354	35.55	38280	20958	78715	1766	29569442
	64326	M	D	44	16:00-24:0	8.7	5,066	8.96	8.19	33.31	49.54	0.67	12231	1.10	14763	9.00	0.74	13435	36.59	45391	41491	168748	3394	61962246

Crystal River Fossil Plant
Heat Rate Data Collection Form
Unit 5

Test Identification: Run #1							
Test Date: 6-4-06							
	5 RP	Coal Feeder Integrators					
	HR:MN	502	503	504	505	506	507
Start Time:	10 : 13	30515	314875	407796	258416	448497	438810
End Time:	11 : 25	30576	314935	407854	258476	448558	438872
Difference:	MMOT						
	Unit MWs at Start:		710	Unit MWs at End:		710	

Test Identification: Run #2							
Test Date: 6-4-06							
	5 RP	Coal Feeder Integrators					
	HR:MN	502	503	504	505	506	507
Start Time:	11 : 42	30583	314943	407861	258481	448563	438877
End Time:	12 : 45	30632	314991	407908	258530	448612	438927
Difference:	MMOT.						
	Unit MWs at Start:		710	Unit MWs at End:		710	

Test Identification: Run #3							
Test Date: 6-4-06							
	5 RP	Coal Feeder Integrators					
	HR:MN	502	503	504	505	506	507
Start Time:	13 : 07	30644	315003	407920	258542	448624	438939
End Time:	11 : 10	30693	315052	407968	258591	448673	438989
Difference:	:						
	Unit MWs at Start:		708	Unit MWs at End:		710	

Comments: _____

Project Participants

PROJECT PARTICIPANTS

Koogler & Associates

John B. Koogler, Ph.D., P.E. . . . . Project Advisor
Steven Cloutier . . . . . Technical Manager
Rodney Paul . . . . . Field Test Crew
Glen Haven . . . . . Field Test Crew
Adam West . . . . . Field Test Crew

Progress Energy Florida, Inc.

Cynthia Wilkinson . . . . . Senior Environmental Specialist
James Long. . . . . Senior Environmental Specialist

Strategic Engineering Technical Services Section

Dan Donochod, P.E. . . . . Engineer

KOOGLER & ASSOCIATES, INC.
ENVIRONMENTAL SERVICES

Baseline (4/19/06) - CO Test Report

Carbon Monoxide Emissions Test Report

Progress Energy Florida
Crystal River, Unit 5
Crystal River, Florida

C.E.M. Solutions Project No. 2670

Testing Completed: April 2006

Client Purchase Order Number: 49782
C.E.M. Solutions, Inc Report Number: 20-2670-05-001

C.E.M. Solutions, Inc.
7990 W. Gulf to Lake Hwy.
Crystal River, Florida 34429
Phone: 352-564-0441

Statement of Validity

I hereby certify the information and data provided in this emissions test report for tests performed at Progress Energy's Crystal River facility Unit 5, conducted on April 19, 2006 are complete and accurate to the best of my knowledge.

Jeremy A. Johnson
President
C.E.M. Solutions, Inc.

Project Background

Name of Source Owner:	Progress Energy
Address of Owner:	One Power Plaza 263 13th Avenue South St. Petersburg, FL 33701
Source Identification:	Oris Code 628 Facility ID: 0170004 Emissions Unit 003
Location of Source:	Citrus County, Florida
Type of Operation:	SIC Code: 4911
Tests Performed:	Method 3A – Determination of Oxygen and Carbon Dioxide Method 10 – Determination of Carbon Monoxide
Test Supervisor:	Mr. Jeremy A. Johnson
Date(s) Tests Conducted:	April 19, 2006
Site Test Coordinator:	Mr. James T. Long
State Regulatory Observers:	No Attendees

C.E.M. Solutions, Inc Test Personnel

Project Field Manager:	Mr. Jeremy A. Johnson
Test Technicians:	Mr. Charles Horton Mr. Joseph Conti

Table of Contents

List of Tables

Appendices

1.0 Introduction

Progress Energy, Florida retained C.E.M. Solutions, Inc. to perform air source emissions testing on Unit 5 at its Crystal River facility located in Citrus County, Florida.

The test program was conducted to determine air emissions from the Unit 5 exhaust stack. Target pollutants include the following:

- CO (in ppmvd, lb/MMBtu and lb/hr)
- CO_2 % (used to calculate emissions rates)

The test program and results are presented and discussed in this report.

Mr. James Long of Progress Energy's Environmental Services Section coordinated plant operations throughout the test program. All testing was conducted in accordance with test methods promulgated by the Florida Department of Environmental Protection.

CO test runs were completed during the annual CEMS Relative Accuracy Test Audit.

Crystal River Unit 5's carbon monoxide emissions averaged 5.3 ppmvd, 0.0053 lbs/MMBtu, and 35.21 lbs/hr over the test program.

2.0 Facility Description

Crystal River Unit 5 is a fossil fuel steam generator consisting of a dry bottom wall-fired boiler, rated at 760 MW, 6665 mmBtu/hr. Primary fuel is bituminous coal or a bituminous coal and bituminous coal briquette mixture. Number 2 fuel oil and natural gas may be burned as a startup fuel and for low load flame stabilization.

2.1 Process Equipment

Fossil Fuel Steam Generator, Unit 5 is a pulverized coal, dry bottom, wall-fired boiler. Emissions are controlled from the unit with a high efficiency electrostatic precipitator, manufactured by Combustion Engineering. Emissions are exhausted through a brick and mortar 600 ft. stack.

2.2 Regulatory Requirements

Emissions tests are to be conducted within 90-100 percent of the unit's rated capacity (6665 mmBtu/hr Heat Input) in accordance with permit condition B.1.

3.0 Test Program/Operating Conditions

The test program was conducted to determine the CO emissions from Unit 5 stack while operating at maximum load while firing 100% bituminous coal.

Testing was completed on the April 19, 2006.

During the test program, Unit 5's heat input averaged 6599 mmBtu/hr while operating on 100 percent solid fuel, which correlates to 99 percent of the maximum heat input (6665 mmBtu/hr).

Unit 5's heat input data is located in Appendix A.

Heat input reports were provided by Progress Energy.

4.0 Test Methods

All testing was performed in accordance with methods approved by the USEPA and FDEP. The following discusses the methods, as well as quality assurance and sample handling procedures.

4.1 CO and CO_2 Instrument Analyzer Methods

CO reference method data was determined using instrument analyzer procedures. In addition, diluent gas concentrations of carbon dioxide (CO_2) were measured via instrumental methods. CO_2 data was also used to calculate CO emissions in pounds per million Btu. Mathematical equations used to determine calculated emissions standards can be reviewed in Appendix B. Table 1 summarizes the EPA methods and instrumentation:

Table 1: Summary of EPA Reference Methods and Instrumentation
Progress Energy Florida
Crystal River Energy Complex
Unit 5

Pollutant	EPA Method	Instrument	Serial Number
CO	10	TEI Model 48C	48C-74094-375
CO_2	3A	Servomex 1440	1415D/3379

All reference method analyzers used meet or exceed applicable performance specifications detailed in the appropriate method.

Gas samples were continuously extracted from the stack by a gas sample probe heated to approximately 250°F. Samples were then transported to a gas sample conditioner via a heated sample line operating at 250°F or above. The gas sample conditioner lowers the dew point of the sample gas to approximately 5°C through minimum interference heat exchangers. The dry, cool sample is then sent to the gas analyzers, located in the environmentally controlled test trailer for analysis by the reference method analyzers.

Instrument outputs were recorded continuously with a Windows compatible personal computer, compiled into 15 second averages, and stored in a database for future reference.

Instrument ranges and calibration gases were chosen in accordance with each pollutant's applicable EPA method. Instrument ranges and calibration gases used are shown in Table 2:

Table 2: Reference Method Instrument Ranges and Calibration Gases
Progress Energy Florida
Crystal River Energy Complex
Unit 5

Pollutant	Test Location	Instrument Span	Calibration Gases[a]
CO	Unit 5	1000 ppm	0.0 ppm CO 293.0 ppm CO 613.0 ppm CO 948.0 ppm CO
CO_2	Unit 5	20 %	0.0 % CO_2 10.8 % CO_2 17.6 % CO_2

[a] Concentrations of CO and CO_2 are in a balance of purified nitrogen (N_2). All analyzers were zeroed with ultra high purity N_2. All calibration gases have been certified to NIST traceable standards.

Calibration gas Certificates of Analysis can be found in Appendix C.

4.2 Sampling Location/Traverse Points/Test Run Duration

Unit 5's exhaust stack inner diameter, at the sample location, is 28.29 feet (339.5"). The emissions sampling location is 303 feet downstream from the nearest flow disturbance, and 195 feet upstream from the stack exhaust. A diagram of the sample location can be viewed in Appendix D.

Gas sample traverse points were located in accordance with 40CFR, Part 75, Appendix A, Section 6.5.6(b)(2) at 4.4%(14.9"), 14.6%(49.6"), and 29.6%(100.5") from the inner wall of the stack. Each point was sampled for seven minutes, equaling a total of 21 minutes per test run as required by a 40CFR, Part 75 RATA. A minimum of nine test runs are required.

A total of three RATA runs were averaged to equal one 63 minute test run; for example, RATA runs 1, 2, and 3 were combined to equal one run for compliance determination.

4.3 Quality Assurance/Quality Control Procedures

All sampling, analytical, and Quality Assurance/Quality Control (QA/QC) procedures outlined in the EPA methods were followed. All test equipment was calibrated before or during use in the field. Interference checks and response time checks were performed on each instrumental analyzer, as applicable, before field use. In the field, each analyzer and the entire instrument measurement system was checked for system bias before and following each test run using the calibration gases listed in Table 2.

Appendix E contains the QA/QC checks.

5.0 Test Results

Table 4 summarizes the CO test results. Supporting RM field data and calculated values are presented in Appendix F.

5.1 Carbon Monoxide

Units 5's carbon monoxide emissions during the test were 5.3 parts per million on a dry basis (ppmvd), which corresponds to 0.005 pounds per million British thermal units (lbs/MMBtu), and 35.21 pounds per hour (lbs/hr) based upon a heat input of 6599 MMBtu/hr, while operating on 100 percent bituminous coal.

Table 3: CO Test Summary
Progress Energy
Crystal River, Unit 5

Summary

Test Performed For:
Progress Energy Florida
Crystal River
Unit 5
CO Emissions Test at High Load
Date:4/19/06

Test Performed By:
C.E.M. Solutions, Inc.
7990 W. Gulf to Lake Hwy.
Crystal River, FL 34429
Ph: 352-564-0441

Run Number	Units	Run 1	Run 2	Run 3	Run 4	Run 5	Run 6	Run 7	Run 8	Run 9	Average
Date of Run	1905	19-Apr	19-Apr	19-Apr	19-Apr	19-Apr	19-Apr	19-Apr	19-Apr	19-Apr	
Start Time		9:02:00	10:40:00	11:27:00	12:13:00	13:01:00	13:56:00	14:44:00	15:24:00	16:04:00	
Stop Time		9:23:00	11:01:00	11:48:00	12:34:00	13:22:00	14:17:00	15:05:00	15:45:00	16:25:00	
Unit Load	MW	763.56	758.34	759.10	760.00	759.87	758.29	757.08	757.76	760.17	
Heat Input	mmBtu/Hr	6635	6633	6627	6663	6618	6578	6524	6532	6582	6599
CO2	%, dry	13.4	13.3	13.3	13.3	13.3	13.2	13.2	13.2	13.2	13.3
CO	ppmvd	7.3	5.0	6.1	6.3	5.9	4.1	3.8	3.7	5.6	5.3
CO / CO2	Lbs/mmBtu	0.0070	0.0050	0.0060	0.0060	0.0060	0.0040	0.0040	0.0040	0.0060	0.006
CO / CO2	Lbs/Hr	46.45	33.17	39.76	39.98	39.71	26.31	26.10	26.13	39.49	37.56
Compiled Run Data											
Heat Input	mmBtu/Hr		6632			6620			6546		6599
CO / CO2	ppmvd		6.1			5.4			4.4		5.3
CO / CO2	Lbs/mmBtu		0.0060			0.0053			0.0047		0.0053
CO / CO2	Lbs/Hr		39.79			35.30			30.55		35.21

Appendix A: Facility Operating Data

Unit 5 Heat Input Data (provided by Progress Energy)

Crystal River Heat Input 4/19/6

4/19/06 10:02	6635.261		
4/19/06 10:03	6664.201		
4/19/06 10:04	6629.715		
4/19/06 10:05	6660.102		
4/19/06 10:06	6682.959		
4/19/06 10:07	6703.472		
4/19/06 10:08	6567.258		
4/19/06 10:09	6630.36		
4/19/06 10:10	6645.75		
4/19/06 10:11	6599.596		
4/19/06 10:12	6627.185		
4/19/06 10:13	6635.698		
4/19/06 10:14	6656.72		
4/19/06 10:15	6634.915		
4/19/06 10:16	6655.215		
4/19/06 10:17	6701.202		
4/19/06 10:18	6565.514		
4/19/06 10:19	6570.413		
4/19/06 10:20	6657.809		
4/19/06 10:21	6593.545		
4/19/06 10:22	6616.212		
4/19/06 10:23	6672.542		
4/19/06 10:24	6599.532	RUN 1	6635.008
4/19/06 11:40	6662.461		
4/19/06 11:41	6589.643		
4/19/06 11:42	6601.601		
4/19/06 11:43	6658.603		
4/19/06 11:44	6617.02		
4/19/06 11:45	6683.251		
4/19/06 11:46	6651.075		
4/19/06 11:47	6665.468		
4/19/06 11:48	6584.929		
4/19/06 11:49	6598.02		
4/19/06 11:50	6656.959		
4/19/06 11:51	6567.151		
4/19/06 11:52	6606.17		
4/19/06 11:53	6686.687		
4/19/06 11:54	6687.763		
4/19/06 11:55	6608.359		
4/19/06 11:56	6594.479		
4/19/06 11:57	6621.28		
4/19/06 11:58	6661.627		
4/19/06 11:59	6712.848		
4/19/06 12:00	6539.926		
4/19/06 12:01	6677.909	Run 2	6633.328
4/19/06 12:27	6537.813		
4/19/06 12:28	6596.931		
4/19/06 12:29	6705.424		
4/19/06 12:30	6727.451		

4/19/06 12:31	6677.016		
4/19/06 12:32	6604.701		
4/19/06 12:33	6628.425		
4/19/06 12:34	6582.913		
4/19/06 12:35	6563.433		
4/19/06 12:36	6586.221		
4/19/06 12:37	6579.603		
4/19/06 12:38	6689.938		
4/19/06 12:39	6683.715		
4/19/06 12:40	6691.604		
4/19/06 12:41	6592.818		
4/19/06 12:42	6592.087		
4/19/06 12:43	6603.718		
4/19/06 12:44	6601.308		
4/19/06 12:45	6645.633		
4/19/06 12:46	6698.698		
4/19/06 12:47	6562.884		
4/19/06 12:48	6646.288	Run 3	6627.21
4/19/06 13:13	6572.108		
4/19/06 13:14	6668.564		
4/19/06 13:15	6669.365		
4/19/06 13:16	6704.529		
4/19/06 13:17	6655.902		
4/19/06 13:18	6791.056		
4/19/06 13:19	6717.447		
4/19/06 13:20	6653.702		
4/19/06 13:21	6654.459		
4/19/06 13:22	6688.816		
4/19/06 13:23	6742.263		
4/19/06 13:24	6684.267		
4/19/06 13:25	6663.813		
4/19/06 13:26	6651.219		
4/19/06 13:27	6626.005		
4/19/06 13:28	6693.727		
4/19/06 13:29	6619.014		
4/19/06 13:30	6665.912		
4/19/06 13:31	6635.212		
4/19/06 13:32	6590.338		
4/19/06 13:33	6638.587		
4/19/06 13:34	6609.343	Run 4	6663.439
4/19/06 14:01	6588.015		
4/19/06 14:02	6624.043		
4/19/06 14:03	6587.097		
4/19/06 14:04	6654.394		
4/19/06 14:05	6593.765		
4/19/06 14:06	6653.613		
4/19/06 14:07	6708.179		
4/19/06 14:08	6627.887		
4/19/06 14:09	6670.89		
4/19/06 14:10	6695.009		
4/19/06 14:11	6553.458		
4/19/06 14:12	6553.03		

4/19/06 14:13	6614.405		
4/19/06 14:14	6695.237		
4/19/06 14:15	6611.554		
4/19/06 14:16	6597.636		
4/19/06 14:17	6659.264		
4/19/06 14:18	6586.133		
4/19/06 14:19	6633.275		
4/19/06 14:20	6562.646		
4/19/06 14:21	6524.237		
4/19/06 14:22	6601.826	Run 5	6617.981
4/19/06 14:56	6603.536		
4/19/06 14:57	6539.661		
4/19/06 14:58	6540.385		
4/19/06 14:59	6590.54		
4/19/06 15:00	6600.113		
4/19/06 15:01	6560.716		
4/19/06 15:02	6654.27		
4/19/06 15:03	6536.91		
4/19/06 15:04	6609.04		
4/19/06 15:05	6528.721		
4/19/06 15:06	6558.452		
4/19/06 15:07	6537.75		
4/19/06 15:08	6598.692		
4/19/06 15:09	6558.211		
4/19/06 15:10	6586.755		
4/19/06 15:11	6617.734		
4/19/06 15:12	6686.982		
4/19/06 15:13	6605.139		
4/19/06 15:14	6606.954		
4/19/06 15:15	6669.328		
4/19/06 15:16	6473.833		
4/19/06 15:17	6455.484	Run 6	6578.146
4/19/06 15:44	6456.093		
4/19/06 15:45	6526.23		
4/19/06 15:46	6578.951		
4/19/06 15:47	6643.747		
4/19/06 15:48	6461.447		
4/19/06 15:49	6545.304		
4/19/06 15:50	6564.205		
4/19/06 15:51	6490.833		
4/19/06 15:52	6553.395		
4/19/06 15:53	6484.695		
4/19/06 15:54	6565.114		
4/19/06 15:55	6498.571		
4/19/06 15:56	6541.332		
4/19/06 15:57	6459.402		
4/19/06 15:58	6525.003		
4/19/06 15:59	6420.828		
4/19/06 16:00	6550.043		
4/19/06 16:01	6555.734		
4/19/06 16:02	6524.033		
4/19/06 16:03	6522.374		

4/19/06 16:04	6529.142		
4/19/06 16:05	6539.355	Run 7	6524.356
4/19/06 16:24	6555.979		
4/19/06 16:25	6543.974		
4/19/06 16:26	6516.433		
4/19/06 16:27	6583.33		
4/19/06 16:28	6495.167		
4/19/06 16:29	6534.782		
4/19/06 16:30	6491.346		
4/19/06 16:31	6490.512		
4/19/06 16:32	6573.685		
4/19/06 16:33	6627.64		
4/19/06 16:34	6521.839		
4/19/06 16:35	6494.575		
4/19/06 16:36	6515.466		
4/19/06 16:37	6579.381		
4/19/06 16:38	6550.543		
4/19/06 16:39	6485.849		
4/19/06 16:40	6476.115		
4/19/06 16:41	6522.427		
4/19/06 16:42	6541.407		
4/19/06 16:43	6585.687		
4/19/06 16:44	6550.423		
4/19/06 16:45	6482.636	Run 8	6532.691
4/19/06 17:04	6603.273		
4/19/06 17:05	6659.355		
4/19/06 17:06	6646.365		
4/19/06 17:07	6559.297		
4/19/06 17:08	6547.446		
4/19/06 17:09	6672.437		
4/19/06 17:10	6602.064		
4/19/06 17:11	6592.966		
4/19/06 17:12	6576.352		
4/19/06 17:13	6612.77		
4/19/06 17:14	6555.595		
4/19/06 17:15	6618.907		
4/19/06 17:16	6686.183		
4/19/06 17:17	6543.528		
4/19/06 17:18	6564.983		
4/19/06 17:19	6494.054		
4/19/06 17:20	6552.118		
4/19/06 17:21	6424.745		
4/19/06 17:22	6492.173		
4/19/06 17:23	6612.93		
4/19/06 17:24	6606.893		
4/19/06 17:25	6579.391	Run 9	6581.992

Appendix B: Mathematical Equations

Reference Method Calibrations

Difference

The absolute difference is calculated in accordance with 40 CFR 60, App. B, Meth. 6C, Sect 6.3.1, 6.3.2 and figure 6C-4. The algebraic expression used to return this result is:

Analyzer Response - Reference Gas Concentration

Calibration Error

The calibration error is calculated in accordance with 40 CFR 60, App. B, Meth. 6C, Sect 6.3.1, 6.3.2 and figure 6C-4 and displayed as a percent of the span described in section 2.1 of this document. The algebraic expression used to return this result is:

Difference / Full Scale *100

All measured parameters are subjected to the calibration error test for reporting by the operator. Should the test not be required, (i.e. method 20 or method 25a) it may be deleted.

Pre Run Bias

The Pre Run Bias is calculated in accordance with 40 CFR 60, App. B, Meth. 6C, Sect 6.4 and figure 6C-5 and displayed as a percent of the span described in section 2.1 of this document. The algebraic expression used to return this result is:

Initial Cal Value - Analyzer Cal Response / Full Scale *100

All measured parameters are subjected to the calibration error test for reporting by the operator. Should the test not be required, (i.e. method 20 or method 25a) it may be deleted.

Post Run Bias

The Post Run Bias is calculated in accordance with 40 CFR 60, App. B, Meth. 6C, Sect 6.4 and figure 6C-5 and displayed as a percent of the span described in section 2.1 of this document. The algebraic expression used to return this result is:

Final Cal Value - Analyzer Cal Response / Full Scale *100

Reference Method Calibrations, continued

Total Run Drift

The Total Run Drift is calculated in accordance with 40 CFR 60, App. B, Meth. 6C, Sect 7.4 and figure 6C-5 and displayed as a percent of the span. The algebraic expression used to return this result is:

Final Cal Value - Initial Cal Value / Full Scale *100

Average

The average calibration results are calculated in accordance with 40 CFR 60, App. B, Meth. 6C, Sect 8 and equation 6C-1. This calculation yields the variable "C_o or C_m" as appropriate. The algebraic expression used to return this result is:

Initial Cal Value + Final Cal Value / 2

This format yields a number expressed in ppm or percent, as appropriate.

Corrected Results

The corrected results are calculated for all gases except Oxygen in accordance with 40 CFR 60, App. B, Meth. 6C, Sect. 8 and equation 6C-1. Oxygen corrected results are calculated per 40 CFR 60, App. B, Meth. 3A, Sect 9 and equation 3A-1. The algebraic expression used to return this result for all gases except oxygen is:

$$C_{gas} = (C - C_o) * C_{ma} / (C_m - C_o) \qquad \text{Eq. 6C-1}$$

Where:

C_{gas} = Effluent gas concentration, dry basis, ppm.

C = Average gas concentration, dry basis, ppm.

C_o = Average of initial and final system bias check responses for the zero gas, ppm.

C_m = Average of initial and final system bias check responses for the upscale calibration gas, ppm.

C_{ma} = Actual concentration of the upscale calibration gas, ppm.

Emissions Rates in lbs/mmBtu

When reference method readings for pollutant and carbon dioxide are on a dry basis, equation 19-6 of Method 19 is utilized.

$$E = C_d * F_d * \frac{100}{\%CO_{2d}} \qquad \text{Eq. 19-6}$$

Where:

C_d = Pollutant concentration, dry basis, in lb/scf (to convert ppm to lb/scf refer to Table 19-1).

F_d = Volume of combustion components per unit of heat input, dry basis, dscf/mmBtu. (for oil 9190)

$\%CO_{2d}$ = Carbon dioxide, dry basis, percent

Table 19-1: Conversion Factors For Concentrations.

From	To	Multiply by
ppm SO_2	lb/scf	1.660×10^{-7}
ppm NO_X	lb/scf	1.194×10^{-7}
ppm CO	lb/scf	$2.5955 \times 10^{-9} \times 28.01$

Appendix C: Reference Method Calibration Gas Certificates of Analysis

BEST AVAILABLE COPY

Certificate of Analysis

EPA Protocol

HiQ® Certificate

Performed according to EPA-600/R-97/121, Procedure G1

Notice: This Cylinder is not to be used when pressure is under 150 psig.

Manufactured and certified at:
Linde Gas LLC
Maumee Specialty Gas Plant
6421 Monclova Road
MAUMEE OH 43537
419-893-7226

Produced for customer:
LINDE OCALA INTERBRANCH
214 S W 33RD AVE
OCALA FL 34474
USA
352-351-4417

Material:	2179		**Blend Tolerance:**	5 % Relative
MISC 3 COMPONENT	EPA	A31	**Blend Type:**	EPA Protocol
Production #:	100100352		**Cyl. Pressure:**	2000 psig
Lot #:	02499E5060ZD		**Balance Gas:**	Nitrogen
Cylinder #:	CC89066		**CGA:**	590
Expiration Date:	5/10/2008		**Analytical Accuracy:**	1.00 % Relative
Shelf Life:	36 months		**Confidence:**	95 %

CAS #	Certified Component	Requested Concentration	Concentration and Uncertainty	Date of Certification
7782-44-7	Oxygen	13	12.9 +/- 0.1 %	05/10/2005
124-38-9	Carbon Dioxide	11	10.9 +/- 0.1 %	05/10/2005
7727-37-9	Nitrogen		Balance	05/10/2005

CAS #	Reference Standard	Cylinder/Standard #	Concentration	Expire Date
124-38-9	Carbon Dioxide	CC59277 , NTRM	6.900 %	10/02/2008
7782-44-7	Oxygen	CC73287 , NTRM	9.90 %	10/02/2008

Instrument	Serial #	Analytical Principle	Calibration Date
Horiba VIA-510	568849043	Non-Dispersive Infrared	05/04/2005
Rosemount 755R	1000559	Paramagnetic	05/05/2005

All analyses are performed under controlled environmental conditions.This product is manufactured using equipment which has been calibrated with NIST traceable, or equivalent, standards, weights, or equipment.

Analytical report approved by Roy Yoder

Roy Yoder

HiQ certificate

BEST AVAILABLE COPY

Member of the Linde Gas Group

Linde

Certificate of Analysis

EPA Protocol

Performed according to EPA-600/R-97/121, Procedure G1

Notice: This Cylinder is not to be used when pressure is under 150 psig.

Manufactured and certified at:
Linde Gas LLC
Maumee Specialty Gas Plant
6421 Monclova Road
MAUMEE OH 43537
419-893-7226

Produced for customer:
CYLINDER/HARDWARE ACCT
HOLOX LTD
1500 INDIAN TRAIL RD #C
NORCROSS GA 30093
770-925-4640

Material:	2179	**Blend Tolerance:**	1 % Relative
MISC 3 COMPONENT EPA	A31	**Blend Type:**	EPA Protocol
Production #:	100081154	**Cyl. Pressure:**	2000 psig
Lot #:	0249934270ME	**Balance Gas:**	Nitrogen
Cylinder #:	CC59200	**CGA:**	590
Expiration Date:	3/9/2007	**Analytical Accuracy:**	1.00 % Relative
Shelf Life:	36 months	**Confidence:**	95 %

CAS #	Certified Component	Requested Concentration	Concentration and Uncertainty	Date of Certification
124-38-9	Carbon Dioxide	18	17.6 +/- 0.2 %	03/09/2004
7782-44-7	Oxygen	21	21.0 +/- 0.2 %	03/09/2004
7727-37-9	Nitrogen		Balance	03/09/2004

CAS #	Reference Standard	Cylinder/Standard #	Concentration	Expire Date
7782-44-7	Oxygen	CC73601 , NTRM	20.89 %	05/29/2005
124-38-9	Carbon Dioxide	CC59203 , NTRM	19.91 %	08/01/2005

Instrument	Serial #	Analytical Principle	Calibration Date
Horiba VIA-510	568849043	Non-Dispersive Infrared	10/22/2003
Rosemount 755R	1000559	Paramagnetic	12/19/2003

This product is manufactured using equipment which has been calibrated with NIST traceable, or equivalent, standards, weights, or equipment.

nalytical report approved by Jim Healy

HiQ Analysis Certificate

Linde Gas | Linde

Certificate of Analysis

EPA Protocol

Performed according to EPA-600/R-97/121, Procedure G1

Notice: This Cylinder is not to be used when pressure is under 150 psig.

Manufactured and certified at:

Linde Gas LLC
Maumee Specialty Gas Plant
6421 Monclova Road
MAUMEE OH 43537
419-893-7226

Produced for customer:

LINDE OCALA INTERBRANCH
214 S W 33RD AVE
OCALA FL 34474
USA
352-351-4417

Material:	6198	**Blend Tolerance:**	5 % Relative
EPA CO/N2 100-999 PPM	A31	**Blend Type:**	EPA Protocol
Production #:	100088507	**Cyl. Pressure:**	2000 psig
Lot #:	02499H4260YA	**Balance Gas:**	Nitrogen
Cylinder #:	CC183009	**CGA:**	350
Expiration Date:	9/8/2007	**Analytical Accuracy:**	1.00 % Relative
Shelf Life:	36 months	**Confidence:**	95 %

CAS #	Certified Component	Requested Concentration	Concentration and Uncertainty	Date of Certification
630-08-0	Carbon Monoxide	300	293 +/- 3 ppm	09/08/2004
7727-37-9	Nitrogen		Balance	09/08/2004

CAS #	Reference Standard	Cylinder/Standard #	Concentration	Expire Date
630-08-0	Carbon Monoxide	CC110784 , GMIS	2522 ppm	01/09/2006
630-08-0	Carbon Monoxide	CC155679 , GMIS	251.4 ppm	01/12/2006

Instrument	Serial #	Analytical Principle	Calibration Date
Horiba VIA-510	568384012	Non-Dispersive Infrared	07/16/2004

All analyses are performed under controlled environmental conditions.This product is manufactured using equipment which has been calibrated with NIST traceable, or equivalent, standards, weights, or equipment.

Analytical report approved by Jennifer Carney

Jennifer Carney

HiQ Analysis Certificate

AGA
Member of the Linde Gas Group

Linde

Certificate of Analysis

EPA Protocol

Performed according to EPA-600/R-97/121, Procedure G1

Notice: This Cylinder is not to be used when pressure is under 150 psig.

Manufactured and certified at:
Linde Gas LLC
Maumee Specialty Gas Plant
6421 Monclova Road
MAUMEE OH 43537
419-893-7226

Produced for customer:
LINDE OCALA INTERBRANCH
214 S W 33RD AVE
OCALA FL 34474
USA
352-351-4417

Material:	6198	**Blend Tolerance:**	5 % Relative
EPA CO/N2 100-999 PPM	A31	**Store/Use Temp:**	35 to 90 F
Production #:	100100610	**Blend Type:**	Gravimetric
Lot #:	02499H2140MC1	**Cyl. Pressure:**	1438 psig
Cylinder #:	CC149888	**Balance Gas:**	Nitrogen
Expiration Date:	5/24/2008	**CGA:**	350
Shelf Life:	36 months	**Analytical Accuracy:**	1.00 % Relative

CAS #	Certified Component	Requested Concentration	Concentration and Uncertainty	Date of Certification
630-08-0	Carbon Monoxide	600	613 +/- 6 ppm	05/24/2005
7727-37-9	Nitrogen		Balance	05/24/2005

CAS #	Reference Standard	Cylinder/Standard #	Concentration	Expire Date
630-08-0	Carbon Monoxide	CC27004 , GMIS	506.3 ppm	08/09/2004
630-08-0	Carbon Monoxide	CC10347 , GMIS	1023.4 ppm	12/22/2005

Instrument	Serial #	Analytical Principle	Calibration Date
Horiba VIA-510	569466011	Non-Dispersive Infrared	05/09/2005

All analyses are performed under controlled environmental conditions.This product is manufactured using equipment which has been calibrated with NIST traceable, or equivalent, standards, weights, or equipment.

Analytical report approved by Jennifer Carney

Jennifer Carey

HiQ Analysis Certificate

AGA
Member of the Linde Gas Group

Linde

Certificate of Analysis

EPA Protocol

Performed according to EPA-600/R-97/121, Procedure G1

Notice: This Cylinder is not to be used when pressure is under 150 psig.

Manufactured and certified at:
Linde Gas LLC
Maumee Specialty Gas Plant
6421 Monclova Road
MAUMEE OH 43537
419-893-7226

Produced for customer:
LINDE OCALA INTERBRANCH
214 S W 33RD AVE
OCALA FL 34474
USA
352-351-4417

Material:	6198	**Blend Tolerance:**	5 % Relative
EPA CO/N2 100-999 PPM	A31	**Store/Use Temp:**	35 to 90 F
Production #:	100100611	**Blend Type:**	Gravimetric
Lot #:	02499H2140MB1	**Cyl. Pressure:**	1502 psig
Cylinder #:	CC150173	**Balance Gas:**	Nitrogen
Expiration Date:	5/24/2008	**CGA:**	350
Shelf Life:	36 months	**Analytical Accuracy:**	1.00 % Relative

CAS #	Certified Component	Requested Concentration	Concentration and Uncertainty	Date of Certification
630-08-0	Carbon Monoxide	950	948 +/- 9 ppm	05/24/2005
7727-37-9	Nitrogen		Balance	05/24/2005

CAS #	Reference Standard	Cylinder/Standard #	Concentration	Expire Date
630-08-0	Carbon Monoxide	CC27004 , GMIS	506.3 ppm	08/09/2004
630-08-0	Carbon Monoxide	CC10347 , GMIS	1023.4 ppm	12/22/2005

Instrument	Serial #	Analytical Principle	Calibration Date
Horiba VIA-510	569466011	Non-Dispersive Infrared	05/09/2005

All analyses are performed under controlled environmental conditions.This product is manufactured using equipment which has been calibrated with NIST traceable, or equivalent, standards, weights, or equipment.

Analytical report approved by Jennifer Carney

Jennifer Carney

HiQ Analysis Certificate

Appendix D: Sample Location Diagram

BEST AVAILABLE COPY

CEM Solutions, Inc.
METHOD 1: Determining Number of Particulate and Velocity Traverse Points For a Circular Stack

Company:	Progress Energy	Date:	4/10/2006
Facility:	Crystal River	Project #:	2543
Unit No.:	Unit 5	Operator:	Joe Conti
Sample Location:	Stack		

Stack or Duct Diameter

Shape of Stack	Circular
# of Test Ports	4
Stack Diameter (D), inches	339.5
Port Depth (P), inches	15
Stack Area (A_s), ft^2	628.3284

Distance from Test Ports to Disturbances

Distance Upstream (A), inches	2343
Diameters Upstream (A_D)	6.90
Distance Downstream (B), inches	3633
Diameters Downstream (B_D)	10.70

Minimum number of particulate traverse points

calculated for upstream distance	12
calculated for downstream distance	12
if 12"<D<24" and $A_D > 2$ and $B_D > 8$	0
NUMBER OF POINTS TO BE USED	12

Minimum number of velocity traverse points

calculated for upstream distance	12
calculated for downstream distance	12
if 12"<D<24" and $A_D > 2$ and $B_D > 8$	0
NUMBER OF POINTS TO BE USED	12

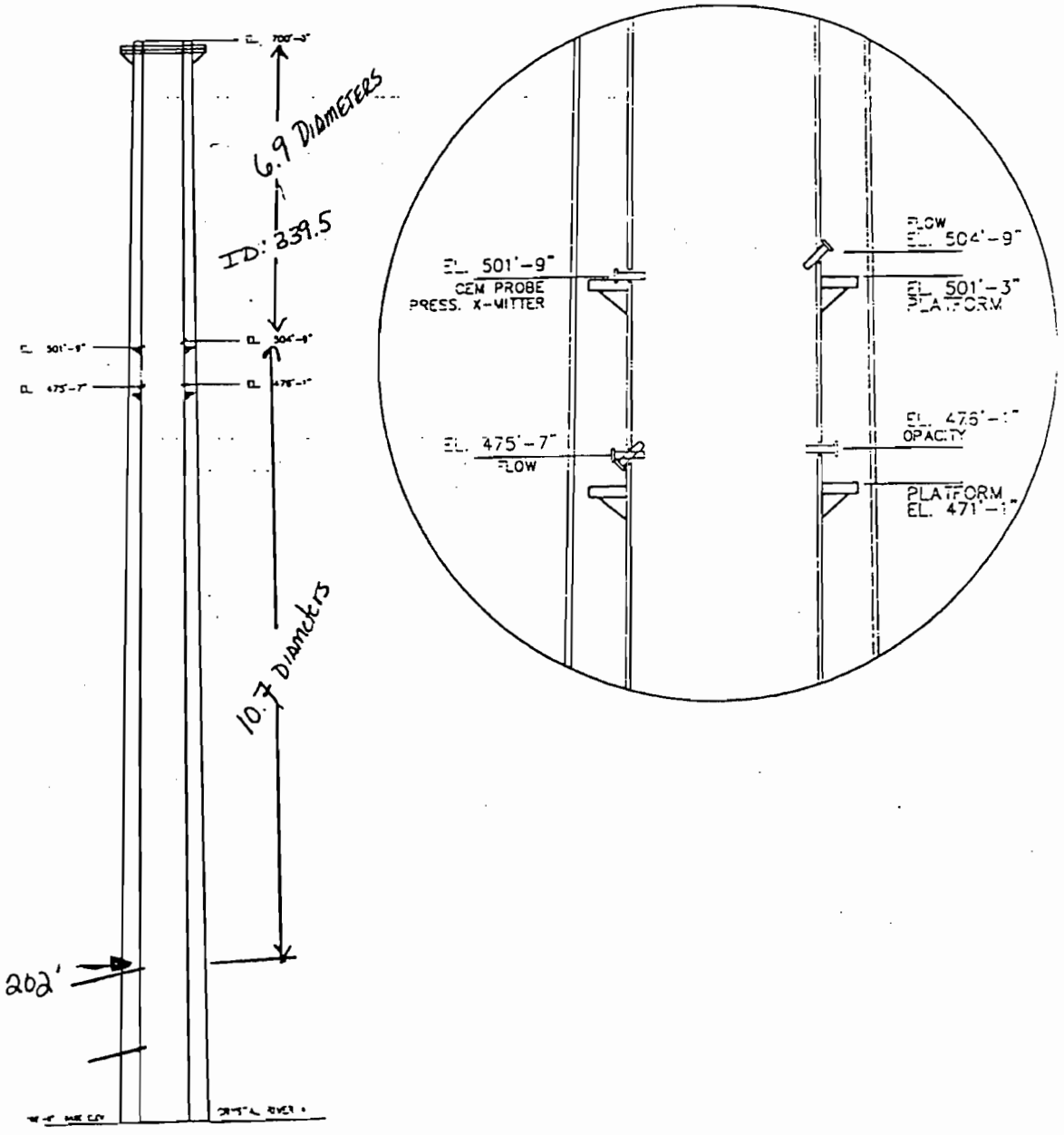
6.9 DIAMETERS
ID: 339.5
10.7 DIAMETERS
202'
EL. 501'-9"
CEM PROBE
PRESS. X-MITTER
EL. 475'-7"
FLOW
FLOW
EL. 504'-9"
EL. 501'-3"
PLATFORM
OPACITY
PLATFORM

Appendix E: Reference Method Quality Assurance, Quality Control (QA/QC) Checks

Response Time Test

Date of test:	4/18/2006
Plant:	PEF Crystal River
Unit Number:	5
Analyzer type:	CO
Serial Number:	48C-74094-375
Span gas Concentration:	948 ppm
Analyzer span setting:	1000 ppm

Upscale:

Run	Seconds
1	180
2	180
3	180

Average upscale response: 180

Downscale:

Run	Seconds
1	180
2	180
3	180

Average downscale response: 180

System response time:	180
Slower average time:	180

Response Time Test

Date of test:	4/18/2006
Plant:	PEF Crystal River
Unit Number:	5
Analyzer type:	CO2
Serial Number:	1415D/3379
Span gas Concentration:	17.6
Analyzer span setting:	20

Upscale:

Run	Seconds
1	120
2	120
3	120

Average upscale response: 120

Downscale:

Run	Seconds
1	120
2	120
3	120

Average downscale response: 120

System response time:	120
Slower average time:	180

Analyzer Calibration Error

Test Performed For:
Progress Energy Florida
Crystal River
Unit 5
Pt. 75 High Load Gas and Flow RATA
Date:4/19/06

Test Performed By:
C.E.M. Solutions, Inc.
7990 W. Gulf to Lake Hwy.
Crystal River, FL 34429
Ph: 352-564-0441
Run 1

Carbon Dioxide Monitor

Method 3A

Full Scale: 20.00 %

Serial Number: 01415D/3379

Cylinder Number	Reference Gas Concentration	Analyzer Response	Difference	Calibration Error (%)
CC 81224/cg1	0.00 %	0.06 %	0.06 %	0.30 %
CC89066/cg2	10.90 %	10.85 %	-0.05 %	-0.25 %
CC59200/cg3	17.60 %	17.61 %	0.01 %	0.05 %

Carbon Monoxide Monitor

Method 10

Full Scale: 1,000.0 ppm

Serial Number: 48C-74094-375

Cylinder Number	Reference Gas Concentration	Analyzer Response	Difference	Calibration Error (%)
CC 81224/cg1	0.0 ppm	-0.2 ppm	-0.2 ppm	-0.02 %
CC183009/cg6	293.0 ppm	293.1 ppm	0.1 ppm	0.01 %
CC149888/cg7	613.0 ppm	610.0 ppm	-3.0 ppm	-0.30 %
CC150173/cg8	948.0 ppm	946.1 ppm	-1.9 ppm	-0.19 %

Sampling System Bias and Drift

Test Performed For:
Progress Energy Florida
Crystal River
Unit 5
Pt. 75 High Load Gas and Flow RATA
Date:4/19/06

Test Performed By:
C.E.M. Solutions, Inc.
7990 W. Gulf to Lake Hwy.
Crystal River, FL 34429
Ph: 352-564-0441
Run 1

Monitor Type	Analyzer Cal Response	Initial Cal Value	Pre Run Bias (%)	Final Cal Value	Post Run Bias (%)	Total Run Drift (%)
CO_2	0.06 %	0.10 %	0.20 %	0.15 %	0.45 %	0.25 %
CO_2	10.85 %	10.72 %	-0.65 %	10.76 %	-0.45 %	0.20 %
CO	-0.2 ppm	0.0 ppm	0.02 %	0.0 ppm	0.02 %	0.00 %
CO	293.1 ppm	290.3 ppm	-0.28 %	289.4 ppm	-0.37 %	-0.09 %

Sampling System Bias and Drift

Test Performed For:
Progress Energy Florida
Crystal River
Unit 5
Pt. 75 High Load Gas and Flow RATA
Date:4/19/06

Test Performed By:
C.E.M. Solutions, Inc.
7990 W. Gulf to Lake Hwy.
Crystal River, FL 34429
Ph: 352-564-0441
Run 2

Monitor Type	Analyzer Cal Response	Initial Cal Value	Pre Run Bias (%)	Final Cal Value	Post Run Bias (%)	Total Run Drift (%)
CO_2	0.06 %	0.15 %	0.45 %	0.21 %	0.75 %	0.30 %
CO_2	10.85 %	10.76 %	-0.45 %	10.79 %	-0.30 %	0.15 %
CO	-0.2 ppm	0.0 ppm	0.02 %	0.0 ppm	0.02 %	0.00 %
CO	293.1 ppm	289.4 ppm	-0.37 %	288.4 ppm	-0.47 %	-0.10 %

Sampling System Bias and Drift

Test Performed For:
Progress Energy Florida
Crystal River
Unit 5
Pt. 75 High Load Gas and Flow RATA
Date:4/19/06

Test Performed By:
C.E.M. Solutions, Inc.
7990 W. Gulf to Lake Hwy.
Crystal River, FL 34429
Ph: 352-564-0441
Run 3

Monitor Type	Analyzer Cal Response	Initial Cal Value	Pre Run Bias (%)	Final Cal Value	Post Run Bias (%)	Total Run Drift (%)
CO_2	0.06 %	0.21 %	0.75 %	0.16 %	0.50 %	-0.25 %
CO_2	10.85 %	10.79 %	-0.30 %	10.81 %	-0.20 %	0.10 %
CO	-0.2 ppm	0.0 ppm	0.02 %	0.0 ppm	0.02 %	0.00 %
CO	293.1 ppm	288.4 ppm	-0.47 %	288.7 ppm	-0.44 %	0.03 %

Sampling System Bias and Drift

Test Performed For:
Progress Energy Florida
Crystal River
Unit 5
Pt. 75 High Load Gas and Flow RATA
Date:4/19/06

Test Performed By:
C.E.M. Solutions, Inc.
7990 W. Gulf to Lake Hwy.
Crystal River, FL 34429
Ph: 352-564-0441
Run 4

Monitor Type	Analyzer Cal Response	Initial Cal Value	Pre Run Bias (%)	Final Cal Value	Post Run Bias (%)	Total Run Drift (%)
CO_2	0.06 %	0.16 %	0.50 %	0.22 %	0.80 %	0.30 %
CO_2	10.85 %	10.81 %	-0.20 %	10.80 %	-0.25 %	-0.05 %
CO	-0.2 ppm	0.0 ppm	0.02 %	0.0 ppm	0.02 %	0.00 %
CO	293.1 ppm	288.7 ppm	-0.44 %	287.9 ppm	-0.52 %	-0.08 %

Sampling System Bias and Drift

Test Performed For:
Progress Energy Florida
Crystal River
Unit 5
Pt. 75 High Load Gas and Flow RATA
Date:4/19/06

Test Performed By:
C.E.M. Solutions, Inc.
7990 W. Gulf to Lake Hwy.
Crystal River, FL 34429
Ph: 352-564-0441
Run 5

Monitor Type	Analyzer Cal Response	Initial Cal Value	Pre Run Bias (%)	Final Cal Value	Post Run Bias (%)	Total Run Drift (%)
CO_2	0.06 %	0.22 %	0.80 %	0.19 %	0.65 %	-0.15 %
CO_2	10.85 %	10.80 %	-0.25 %	10.81 %	-0.20 %	0.05 %
CO	-0.2 ppm	0.0 ppm	0.02 %	-0.2 ppm	0.00 %	-0.02 %
CO	293.1 ppm	287.9 ppm	-0.52 %	288.7 ppm	-0.44 %	0.08 %

Sampling System Bias and Drift

Test Performed For:
Progress Energy Florida
Crystal River
Unit 5
Pt. 75 High Load Gas and Flow RATA
Date:4/19/06

Test Performed By:
C.E.M. Solutions, Inc.
7990 W. Gulf to Lake Hwy.
Crystal River, FL 34429
Ph: 352-564-0441
Run 6

Monitor Type	Analyzer Cal Response	Initial Cal Value	Pre Run Bias (%)	Final Cal Value	Post Run Bias (%)	Total Run Drift (%)
CO_2	0.06 %	0.19 %	0.65 %	0.15 %	0.45 %	-0.20 %
CO_2	10.85 %	10.81 %	-0.20 %	10.78 %	-0.35 %	-0.15 %
CO	-0.2 ppm	-0.2 ppm	0.00 %	0.0 ppm	0.02 %	0.02 %
CO	293.1 ppm	288.7 ppm	-0.44 %	289.8 ppm	-0.33 %	0.11 %

Sampling System Bias and Drift

Test Performed For:
Progress Energy Florida
Crystal River
Unit 5
Pt. 75 High Load Gas and Flow RATA
Date:4/19/06

Test Performed By:
C.E.M. Solutions, Inc.
7990 W. Gulf to Lake Hwy.
Crystal River, FL 34429
Ph: 352-564-0441
Run 7

Monitor Type	Analyzer Cal Response	Initial Cal Value	Pre Run Bias (%)	Final Cal Value	Post Run Bias (%)	Total Run Drift (%)
CO_2	0.06 %	0.15 %	0.45 %	0.22 %	0.80 %	0.35 %
CO_2	10.85 %	10.78 %	-0.35 %	10.77 %	-0.40 %	-0.05 %
CO	-0.2 ppm	0.0 ppm	0.02 %	0.0 ppm	0.02 %	0.00 %
CO	293.1 ppm	289.8 ppm	-0.33 %	289.2 ppm	-0.39 %	-0.06 %

Sampling System Bias and Drift

Test Performed For:
Progress Energy Florida
Crystal River
Unit 5
Pt. 75 High Load Gas and Flow RATA
Date:4/19/06

Test Performed By:
C.E.M. Solutions, Inc.
7990 W. Gulf to Lake Hwy.
Crystal River, FL 34429
Ph: 352-564-0441
Run 8

Monitor Type	Analyzer Cal Response	Initial Cal Value	Pre Run Bias (%)	Final Cal Value	Post Run Bias (%)	Total Run Drift (%)
CO_2	0.06 %	0.22 %	0.80 %	0.20 %	0.70 %	-0.10 %
CO_2	10.85 %	10.77 %	-0.40 %	10.77 %	-0.40 %	0.00 %
CO	-0.2 ppm	0.0 ppm	0.02 %	0.0 ppm	0.02 %	0.00 %
CO	293.1 ppm	289.2 ppm	-0.39 %	289.2 ppm	-0.39 %	0.00 %

Sampling System Bias and Drift

Test Performed For:
Progress Energy Florida
Crystal River
Unit 5
Pt. 75 High Load Gas and Flow RATA
Date:4/19/06

Test Performed By:
C.E.M. Solutions, Inc.
7990 W. Gulf to Lake Hwy.
Crystal River, FL 34429
Ph: 352-564-0441
Run 9

Monitor Type	Analyzer Cal Response	Initial Cal Value	Pre Run Bias (%)	Final Cal Value	Post Run Bias (%)	Total Run Drift (%)
CO_2	0.06 %	0.20 %	0.70 %	0.22 %	0.80 %	0.10 %
CO_2	10.85 %	10.77 %	-0.40 %	10.79 %	-0.30 %	0.10 %
CO	-0.2 ppm	0.0 ppm	0.02 %	-0.2 ppm	0.00 %	-0.02 %
CO	293.1 ppm	289.2 ppm	-0.39 %	289.0 ppm	-0.41 %	-0.02 %

Appendix F: Reference Method Support Data

Average Emissions Calculations
Raw Data

Calculation of Average Emissions

Test Performed For:
Progress Energy Florida
Crystal River
Unit 5
Pt. 75 High Load Gas and Flow RATA
Date:4/19/06

Test Performed By:
C.E.M. Solutions, Inc.
7990 W. Gulf to Lake Hwy.
Crystal River, FL 34429
Ph: 352-564-0441
Run 1

Calibration Gas Value	Initial Calibration	Final Calibration	Average
0.00 percent CO_2	0.10 %	0.15 %	0.12
10.90 percent CO_2	10.72 %	10.76 %	10.74
0.0 ppm CO	0.0 ppm	0.0 ppm	0.00
293.0 ppm CO	290.3 ppm	289.4 ppm	289.86

Mean Reference Values:	**Corrected Results:**	**Basis:**
13.18 percent CO_2	**13.40** percent CO_2	DRY
7.3 ppm CO	**7.3** ppm CO	DRY

Emission Calculations:

0.0070 CO Lbs/mmBtu From CO_2

Calculation of Average Emissions

Test Performed For:
Progress Energy Florida
Crystal River
Unit 5
Pt. 75 High Load Gas and Flow RATA
Date:4/19/06

Test Performed By:
C.E.M. Solutions, Inc.
7990 W. Gulf to Lake Hwy.
Crystal River, FL 34429
Ph: 352-564-0441
Run 2

Calibration Gas Value	Initial Calibration	Final Calibration	Average
0.00 percent CO_2	0.15 %	0.21 %	0.18
10.90 percent CO_2	10.76 %	10.79 %	10.77
0.0 ppm CO	0.0 ppm	0.0 ppm	0.00
293.0 ppm CO	289.4 ppm	288.4 ppm	288.90

Mean Reference Values:	**Corrected Results:**	**Basis:**
13.14 percent CO_2	**13.30** percent CO_2	DRY
4.9 ppm CO	**5.0** ppm CO	DRY

Emission Calculations:
0.0050 CO Lbs/mmBtu From CO_2

Calculation of Average Emissions

Test Performed For:
Progress Energy Florida
Crystal River
Unit 5
Pt. 75 High Load Gas and Flow RATA
Date:4/19/06

Test Performed By:
C.E.M. Solutions, Inc.
7990 W. Gulf to Lake Hwy.
Crystal River, FL 34429
Ph: 352-564-0441
Run 3

Calibration Gas Value	Initial Calibration	Final Calibration	Average
0.00 percent CO_2	0.21 %	0.16 %	0.18
10.90 percent CO_2	10.79 %	10.81 %	10.80
0.0 ppm CO	0.0 ppm	0.0 ppm	0.00
293.0 ppm CO	288.4 ppm	288.7 ppm	288.55

Mean Reference Values:	**Corrected Results:**	**Basis:**
13.16 percent CO_2	**13.30** percent CO_2	DRY
6.0 ppm CO	**6.1** ppm CO	DRY

Emission Calculations:

0.0060 CO Lbs/mmBtu From CO_2

Calculation of Average Emissions

Test Performed For:
Progress Energy Florida
Crystal River
Unit 5
Pt. 75 High Load Gas and Flow RATA
Date:4/19/06

Test Performed By:
C.E.M. Solutions, Inc.
7990 W. Gulf to Lake Hwy.
Crystal River, FL 34429
Ph: 352-564-0441
Run 4

Calibration Gas Value	Initial Calibration	Final Calibration	Average
0.00 percent CO_2	0.16 %	0.22 %	0.19
10.90 percent CO_2	10.81 %	10.80 %	10.80
0.0 ppm CO	0.0 ppm	0.0 ppm	0.00
293.0 ppm CO	288.7 ppm	287.9 ppm	288.27

Mean Reference Values:	**Corrected Results:**	**Basis:**
13.14 percent CO_2	**13.30** percent CO_2	DRY
6.2 ppm CO	**6.3** ppm CO	DRY

Emission Calculations:

0.0060 CO Lbs/mmBtu From CO_2

Calculation of Average Emissions

Test Performed For:
Progress Energy Florida
Crystal River
Unit 5
Pt. 75 High Load Gas and Flow RATA
Date:4/19/06

Test Performed By:
C.E.M. Solutions, Inc.
7990 W. Gulf to Lake Hwy.
Crystal River, FL 34429
Ph: 352-564-0441
Run 5

Calibration Gas Value	Initial Calibration	Final Calibration	Average
0.00 percent CO_2	0.22 %	0.19 %	0.21
10.90 percent CO_2	10.80 %	10.81 %	10.80
0.0 ppm CO	0.0 ppm	-0.2 ppm	-0.10
293.0 ppm CO	287.9 ppm	288.7 ppm	288.26

Mean Reference Values:	**Corrected Results:**	**Basis:**
13.13 percent CO_2	**13.30** percent CO_2	DRY
5.7 ppm CO	**5.9** ppm CO	DRY

Emission Calculations:

0.0060 CO Lbs/mmBtu From CO_2

Calculation of Average Emissions

Test Performed For:
Progress Energy Florida
Crystal River
Unit 5
Pt. 75 High Load Gas and Flow RATA
Date:4/19/06

Test Performed By:
C.E.M. Solutions, Inc.
7990 W. Gulf to Lake Hwy.
Crystal River, FL 34429
Ph: 352-564-0441
Run 6

Calibration Gas Value	Initial Calibration	Final Calibration	Average
0.00 percent CO_2	0.19 %	0.15 %	0.17
10.90 percent CO_2	10.81 %	10.78 %	10.80
0.0 ppm CO	-0.2 ppm	0.0 ppm	-0.10
293.0 ppm CO	288.7 ppm	289.8 ppm	289.22

Mean Reference Values:	**Corrected Results:**	**Basis:**
13.05 percent CO_2	**13.20** percent CO_2	DRY
4.0 ppm CO	**4.1** ppm CO	DRY

Emission Calculations:

0.0040 CO Lbs/mmBtu From CO_2

Calculation of Average Emissions

Test Performed For:
Progress Energy Florida
Crystal River
Unit 5
Pt. 75 High Load Gas and Flow RATA
Date:4/19/06

Test Performed By:
C.E.M. Solutions, Inc.
7990 W. Gulf to Lake Hwy.
Crystal River, FL 34429
Ph: 352-564-0441
Run 7

Calibration Gas Value	Initial Calibration	Final Calibration	Average
0.00 percent CO_2	0.15 %	0.22 %	0.18
10.90 percent CO_2	10.78 %	10.77 %	10.77
0.0 ppm CO	0.0 ppm	0.0 ppm	0.00
293.0 ppm CO	289.8 ppm	289.2 ppm	289.49

Mean Reference Values:	**Corrected Results:**	**Basis:**
12.96 percent CO_2	**13.20** percent CO_2	DRY
3.7 ppm CO	**3.8** ppm CO	DRY

Emission Calculations:

0.0040 CO Lbs/mmBtu From CO_2

Calculation of Average Emissions

Test Performed For:
Progress Energy Florida
Crystal River
Unit 5
Pt. 75 High Load Gas and Flow RATA
Date:4/19/06

Test Performed By:
C.E.M. Solutions, Inc.
7990 W. Gulf to Lake Hwy.
Crystal River, FL 34429
Ph: 352-564-0441
Run 8

Calibration Gas Value	Initial Calibration	Final Calibration	Average
0.00 percent CO_2	0.22 %	0.20 %	0.21
10.90 percent CO_2	10.77 %	10.77 %	10.77
0.0 ppm CO	0.0 ppm	0.0 ppm	0.00
293.0 ppm CO	289.2 ppm	289.2 ppm	289.21

Mean Reference Values:	**Corrected Results:**	**Basis:**
12.97 percent CO_2	**13.20** percent CO_2	DRY
3.7 ppm CO	**3.7** ppm CO	DRY

Emission Calculations:

0.0040 CO Lbs/mmBtu From CO_2

Calculation of Average Emissions

Test Performed For:
Progress Energy Florida
Crystal River
Unit 5
Pt. 75 High Load Gas and Flow RATA
Date:4/19/06

Test Performed By:
C.E.M. Solutions, Inc.
7990 W. Gulf to Lake Hwy.
Crystal River, FL 34429
Ph: 352-564-0441
Run 9

Calibration Gas Value	Initial Calibration	Final Calibration	Average
0.00 percent CO_2	0.20 %	0.22 %	0.21
10.90 percent CO_2	10.77 %	10.79 %	10.78
0.0 ppm CO	0.0 ppm	-0.2 ppm	-0.09
293.0 ppm CO	289.2 ppm	289.0 ppm	289.11

Mean Reference Values:	**Corrected Results:**	**Basis:**
13.02 percent CO_2	**13.20** percent CO_2	DRY
5.5 ppm CO	**5.6** ppm CO	DRY

Emission Calculations:

0.0060 CO Lbs/mmBtu From CO_2

filename		4/19/2006	7:51:00												
testby1	C.E.M. Solutions, Inc.														
testby2	7990 W. Gulf to Lake Hwy.														
testby3	Crystal River, FL 34429														
testby4	Ph: 352-564-0441														
testfor1	Progress Energy Florida														
testfor2	Crystal River														
testfor3	Unit 5														
testfor4	PL 75 High Load Gas and Flow RATA														
name				5 CO2	5 CO										
sn				01415O/3379	48C-74094-375										
offset				0	0										
fullscale				20	1000										
train				1	1										
gastype				co2 3a	co 10										
dcg1		4/19/2006	6:51:15	11.37	2.1	CC 81224/cg1	CO2	0	NOx	0	SO2	0	O2	0	
dcg1		4/19/2006	6:51:30	10.61	1.4	CC 81224/cg1	CO2	0	NOx	0	SO2	0	O2	0	
dcg1		4/19/2006	6:51:45	1.24	1.0	CC 81224/cg1	CO2	0	NOx	0	SO2	0	O2	0	
dcg1		4/19/2006	6:52:00	0.10	0.6	CC 81224/cg1	CO2	0	NOx	0	SO2	0	O2	0	
dcg1		4/19/2006	6:52:15	0.07	-0.2	CC 81224/cg1	CO2	0	NOx	0	SO2	0	O2	0	
dcg1		4/19/2006	6:52:30	0.06	0.0	CC 81224/cg1	CO2	0	NOx	0	SO2	0	O2	0	
dcg1		4/19/2006	6:52:45	0.06	0.0	CC 81224/cg1	CO2	0	NOx	0	SO2	0	O2	0	
co2ezero1		4/19/2006	6:52:30	0.06	0.0	CC 81224/cg1	CO2	0	NOx	0	SO2	0	O2	0	
o2ezero1		4/19/2006	6:52:30	0.06	0.0	CC 81224/cg1	CO2	0	NOx	0	SO2	0	O2	0	
noxezero1		4/19/2006	6:52:45	0.06	0.0	CC 81224/cg1	CO2	0	NOx	0	SO2	0	O2	0	
so2ezero1		4/19/2006	6:52:15	0.07	-0.2	CC 81224/cg1	CO2	0	NOx	0	SO2	0	O2	0	
coezero1		4/19/2006	6:52:15	0.07	-0.2	CC 81224/cg1	CO2	0	NOx	0	SO2	0	O2	0	
dcg2		4/19/2006	6:53:00	0.05	-0.2	CC89066/cg2	O2	12.9	CO2	10.9		0		0	
dcg2		4/19/2006	6:53:15	6.73	0.0	CC89066/cg2	O2	12.9	CO2	10.9		0		0	
dcg2		4/19/2006	6:53:30	10.78	0.0	CC89066/cg2	O2	12.9	CO2	10.9		0		0	
dcg2		4/19/2006	6:53:45	10.85	0.0	CC89066/cg2	O2	12.9	CO2	10.9		0		0	
dcg2		4/19/2006	6:54:00	10.87	0.0	CC89066/cg2	O2	12.9	CO2	10.9		0		0	
co2mid1		4/19/2006	6:53:45	10.85	0.0	CC89066/cg2	O2	12.9	CO2	10.9		0		0	
o2mid1		4/19/2006	6:53:45	10.85	0.0	CC89066/cg2	O2	12.9	CO2	10.9		0		0	
dcg3		4/19/2006	6:54:15	10.87	-0.1	CC59200/cg3	O2	21	CO2	17.6		0		0	
dcg3		4/19/2006	6:54:30	13.93	-0.9	CC59200/cg3	O2	21	CO2	17.6		0		0	
dcg3		4/19/2006	6:54:45	17.51	-1.0	CC59200/cg3	O2	21	CO2	17.6		0		0	
dcg3		4/19/2006	6:55:00	17.59	-0.9	CC59200/cg3	O2	21	CO2	17.6		0		0	
dcg3		4/19/2006	6:55:15	17.61	-1.2	CC59200/cg3	O2	21	CO2	17.6		0		0	
co2high1		4/19/2006	6:55:15	17.61	-1.2	CC59200/cg3	O2	21	CO2	17.6		0		0	
o2high1		4/19/2006	6:55:15	17.61	-1.2	CC59200/cg3	O2	21	CO2	17.6		0		0	
dcg5		4/19/2006	6:55:30	17.62	-0.9	CC35238/cg5	NOx	435	SO2	891		0		0	
dcg5		4/19/2006	6:55:45	10.47	-1.0	CC35238/cg5	NOx	435	SO2	891		0		0	
dcg5		4/19/2006	6:56:00	0.34	0.0	CC35238/cg5	NOx	435	SO2	891		0		0	
dcg5		4/19/2006	6:56:15	0.12	-0.2	CC35238/cg5	NOx	435	SO2	891		0		0	
dcg5		4/19/2006	6:56:30	0.09	0.0	CC35238/cg5	NOx	435	SO2	891		0		0	
dcg5		4/19/2006	6:56:45	0.08	-0.2	CC35238/cg5	NOx	435	SO2	891		0		0	
dcg5		4/19/2006	6:57:00	0.07	-0.2	CC35238/cg5	NOx	435	SO2	891		0		0	
dcg5		4/19/2006	6:57:15	0.06	0.0	CC35238/cg5	NOx	435	SO2	891		0		0	
dcg5		4/19/2006	6:57:30	0.05	0.0	CC35238/cg5	NOx	435	SO2	891		0		0	
dcg5		4/19/2006	6:57:45	0.05	0.0	CC35238/cg5	NOx	435	SO2	891		0		0	
noxhigh1		4/19/2006	6:57:45	0.05	0.0	CC35238/cg5	NOx	435	SO2	891		0		0	
so2high1		4/19/2006	6:57:45	0.05	0.0	CC35238/cg5	NOx	435	SO2	891		0		0	
dcg4		4/19/2006	6:58:00	0.05	0.0	CC150094/cg4	NOx	243	SO2	448		0		0	
dcg4		4/19/2006	6:58:15	1.40	0.0	CC150094/cg4	NOx	243	SO2	448		0		0	
dcg4		4/19/2006	6:58:30	8.08	0.1	CC150094/cg4	NOx	243	SO2	448		0		0	
dcg4		4/19/2006	6:58:45	8.59	0.8	CC150094/cg4	NOx	243	SO2	448		0		0	
dcg4		4/19/2006	6:59:00	8.60	1.0	CC150094/cg4	NOx	243	SO2	448		0		0	
dcg4		4/19/2006	6:59:15	8.60	1.5	CC150094/cg4	NOx	243	SO2	448		0		0	
dcg4		4/19/2006	6:59:30	8.61	1.9	CC150094/cg4	NOx	243	SO2	448		0		0	
noxmid1		4/19/2006	6:59:15	8.60	1.5	CC150094/cg4	NOx	243	SO2	448		0		0	
so2mid1		4/19/2006	6:59:30	8.61	1.9	CC150094/cg4	NOx	243	SO2	448		0		0	
dcg8		4/19/2006	6:59:45	8.61	2.5	CC150173/cg8	CO	948		0		0		0	
dcg8		4/19/2006	7:00:00	4.54	28.1	CC150173/cg8	CO	948		0		0		0	
dcg8		4/19/2006	7:00:15	5.20	204.4	CC150173/cg8	CO	948		0		0		0	
dcg8		4/19/2006	7:00:30	11.04	189.9	CC150173/cg8	CO	948		0		0		0	
dcg8		4/19/2006	7:00:45	9.38	77.2	CC150173/cg8	CO	948		0		0		0	
dcg8		4/19/2006	7:01:00	0.60	213.3	CC150173/cg8	CO	948		0		0		0	
dcg8		4/19/2006	7:01:15	0.08	570.1	CC150173/cg8	CO	948		0		0		0	
dcg8		4/19/2006	7:01:30	0.06	845.3	CC150173/cg8	CO	948		0		0		0	
dcg8		4/19/2006	7:01:45	0.05	921.0	CC150173/cg8	CO	948		0		0		0	
dcg8		4/19/2006	7:02:00	0.05	942.5	CC150173/cg8	CO	948		0		0		0	
dcg8		4/19/2006	7:02:15	0.04	944.2	CC150173/cg8	CO	948		0		0		0	
dcg8		4/19/2006	7:02:30	0.04	946.1	CC150173/cg8	CO	948		0		0		0	
cohigh1		4/19/2006	7:02:30	0.04	946.1	CC150173/cg8	CO	948		0		0		0	
dcg7		4/19/2006	7:02:45	0.04	943.0	CC149888/cg7	CO	613		0		0		0	
dcg7		4/19/2006	7:03:00	0.04	920.3	CC149888/cg7	CO	613		0		0		0	
dcg7		4/19/2006	7:03:15	0.04	811.3	CC149888/cg7	CO	613		0		0		0	
dcg7		4/19/2006	7:03:30	0.03	666.1	CC149888/cg7	CO	613		0		0		0	
dcg7		4/19/2006	7:03:45	0.03	617.4	CC149888/cg7	CO	613		0		0		0	
dcg7		4/19/2006	7:04:00	0.03	608.9	CC149888/cg7	CO	613		0		0		0	
dcg7		4/19/2006	7:04:15	0.03	610.0	CC149888/cg7	CO	613		0		0		0	
comid1		4/19/2006	7:04:15	0.03	610.0	CC149888/cg7	CO	613		0		0		0	
dcg6		4/19/2006	7:04:30	0.03	610.7	CC183009/cg6	CO	293		0		0		0	
dcg6		4/19/2006	7:04:45	0.05	566.9	CC183009/cg6	CO	293		0		0		0	
dcg6		4/19/2006	7:05:00	0.03	414.8	CC183009/cg6	CO	293		0		0		0	
dcg6		4/19/2006	7:05:15	0.02	319.0	CC183009/cg6	CO	293		0		0		0	
dcg6		4/19/2006	7:05:30	0.03	293.1	CC183009/cg6	CO	293		0		0		0	
colow1		4/19/2006	7:05:30	0.03	293.1	CC183009/cg6	CO	293		0		0		0	

filename		4/19/2006	7:51:00											
testby1	C.E.M. Solutions, Inc.													
testby2	7990 W. Gulf to Lake Hwy.													
testby3	Crystal River, FL 34429													
testby4	Ph: 352-564-0441													
testfor1	Progress Energy Florida													
testfor2	Crystal River													
testfor3	Unit 5													
testfor4	Pt. 75 High Load Gas and Flow RATA													
name				5 CO2	5 CO									
sn				01415D/3379	48C-74094-375									
offset				0	0									
fullscale				20	1000									
train				1	1									
gastype				co2 3a	co 10									
scg1		4/19/2006	7:06:45	0.15	1.0	CC 81224/cg1	CO2	0	NOx	0	SO2	0	O2	0
scg1		4/19/2006	7:07:00	2.78	-0.2	CC 81224/cg1	CO2	0	NOx	0	SO2	0	O2	0
scg1		4/19/2006	7:07:15	10.83	0.7	CC 81224/cg1	CO2	0	NOx	0	SO2	0	O2	0
scg1		4/19/2006	7:07:30	11.27	0.4	CC 81224/cg1	CO2	0	NOx	0	SO2	0	O2	0
scg1		4/19/2006	7:07:45	11.34	0.8	CC 81224/cg1	CO2	0	NOx	0	SO2	0	O2	0
scg1		4/19/2006	7:08:00	11.27	1.0	CC 81224/cg1	CO2	0	NOx	0	SO2	0	O2	0
scg1		4/19/2006	7:08:15	11.04	1.0	CC 81224/cg1	CO2	0	NOx	0	SO2	0	O2	0
scg1		4/19/2006	7:08:30	3.03	2.2	CC 81224/cg1	CO2	0	NOx	0	SO2	0	O2	0
scg1		4/19/2006	7:08:45	0.29	3.9	CC 81224/cg1	CO2	0	NOx	0	SO2	0	O2	0
scg1		4/19/2006	7:09:00	0.17	2.0	CC 81224/cg1	CO2	0	NOx	0	SO2	0	O2	0
scg1		4/19/2006	7:09:15	0.15	0.0	CC 81224/cg1	CO2	0	NOx	0	SO2	0	O2	0
scg1		4/19/2006	7:09:30	0.12	-0.4	CC 81224/cg1	CO2	0	NOx	0	SO2	0	O2	0
scg1		4/19/2006	7:09:45	0.12	-0.4	CC 81224/cg1	CO2	0	NOx	0	SO2	0	O2	0
scg1		4/19/2006	7:10:00	0.10	0.0	CC 81224/cg1	CO2	0	NOx	0	SO2	0	O2	0
scg1		4/19/2006	7:10:15	0.10	0.0	CC 81224/cg1	CO2	0	NOx	0	SO2	0	O2	0
scg1		4/19/2006	7:10:30	0.09	0.0	CC 81224/cg1	CO2	0	NOx	0	SO2	0	O2	0
scg1		4/19/2006	7:10:45	0.09	0.0	CC 81224/cg1	CO2	0	NOx	0	SO2	0	O2	0
scg1		4/19/2006	7:11:00	0.08	0.0	CC 81224/cg1	CO2	0	NOx	0	SO2	0	O2	0
scg1		4/19/2006	7:11:15	0.08	0.0	CC 81224/cg1	CO2	0	NOx	0	SO2	0	O2	0
scg1		4/19/2006	7:11:30	0.08	-0.6	CC 81224/cg1	CO2	0	NOx	0	SO2	0	O2	0
scg1		4/19/2006	7:11:45	0.08	0.0	CC 81224/cg1	CO2	0	NOx	0	SO2	0	O2	0
scg1		4/19/2006	7:12:00	0.07	-0.2	CC 81224/cg1	CO2	0	NOx	0	SO2	0	O2	0
scg1		4/19/2006	7:12:15	0.07	-0.2	CC 81224/cg1	CO2	0	NOx	0	SO2	0	O2	0
scg1		4/19/2006	7:12:30	0.07	0.0	CC 81224/cg1	CO2	0	NOx	0	SO2	0	O2	0
scg1		4/19/2006	7:12:45	0.06	0.0	CC 81224/cg1	CO2	0	NOx	0	SO2	0	O2	0
scg1		4/19/2006	7:13:00	0.06	-0.2	CC 81224/cg1	CO2	0	NOx	0	SO2	0	O2	0
scg1		4/19/2006	7:13:15	0.06	0.0	CC 81224/cg1	CO2	0	NOx	0	SO2	0	O2	0
scg1		4/19/2006	7:13:30	0.06	0.0	CC 81224/cg1	CO2	0	NOx	0	SO2	0	O2	0
scg1		4/19/2006	7:13:45	0.06	0.0	CC 81224/cg1	CO2	0	NOx	0	SO2	0	O2	0
scg1		4/19/2006	7:14:00	0.05	0.0	CC 81224/cg1	CO2	0	NOx	0	SO2	0	O2	0
scg1		4/19/2006	7:14:15	0.06	0.0	CC 81224/cg1	CO2	0	NOx	0	SO2	0	O2	0
scg1		4/19/2006	7:14:30	0.06	0.0	CC 81224/cg1	CO2	0	NOx	0	SO2	0	O2	0
scg1		4/19/2006	7:14:45	0.05	0.0	CC 81224/cg1	CO2	0	NOx	0	SO2	0	O2	0
scg1		4/19/2006	7:15:00	0.06	-0.2	CC 81224/cg1	CO2	0	NOx	0	SO2	0	O2	0
scg1		4/19/2006	7:15:15	0.06	0.0	CC 81224/cg1	CO2	0	NOx	0	SO2	0	O2	0
scg1		4/19/2006	7:15:30	0.06	-0.2	CC 81224/cg1	CO2	0	NOx	0	SO2	0	O2	0
scg1		4/19/2006	7:15:45	0.05	-0.2	CC 81224/cg1	CO2	0	NOx	0	SO2	0	O2	0
scg1		4/19/2006	7:16:00	0.06	0.0	CC 81224/cg1	CO2	0	NOx	0	SO2	0	O2	0
scg1		4/19/2006	7:16:15	0.05	-0.2	CC 81224/cg1	CO2	0	NOx	0	SO2	0	O2	0
scg1		4/19/2006	7:16:30	0.06	-0.2	CC 81224/cg1	CO2	0	NOx	0	SO2	0	O2	0
co2zero1		4/19/2006	7:10:15	0.10	0.0	CC 81224/cg1	CO2	0	NOx	0	SO2	0	O2	0
o2zero1		4/19/2006	7:10:15	0.10	0.0	CC 81224/cg1	CO2	0	NOx	0	SO2	0	O2	0
noxzero1		4/19/2006	7:12:45	0.06	0.0	CC 81224/cg1	CO2	0	NOx	0	SO2	0	O2	0
so2zero1		4/19/2006	7:16:15	0.05	-0.2	CC 81224/cg1	CO2	0	NOx	0	SO2	0	O2	0
cozero1		4/19/2006	7:10:00	0.10	0.0	CC 81224/cg1	CO2	0	NOx	0	SO2	0	O2	0
scg2		4/19/2006	7:16:45	0.06	0.0	CC89066/cg2	O2	12.9	CO2	10.9		0		0
scg2		4/19/2006	7:17:00	0.05	-0.2	CC89066/cg2	O2	12.9	CO2	10.9		0		0
scg2		4/19/2006	7:17:15	0.06	0.0	CC89066/cg2	O2	12.9	CO2	10.9		0		0
scg2		4/19/2006	7:17:30	0.05	-0.2	CC89066/cg2	O2	12.9	CO2	10.9		0		0
scg2		4/19/2006	7:17:45	0.05	-0.2	CC89066/cg2	O2	12.9	CO2	10.9		0		0
scg2		4/19/2006	7:18:00	0.05	-0.2	CC89066/cg2	O2	12.9	CO2	10.9		0		0
scg2		4/19/2006	7:18:15	0.05	0.0	CC89066/cg2	O2	12.9	CO2	10.9		0		0
scg2		4/19/2006	7:18:30	1.90	-0.2	CC89066/cg2	O2	12.9	CO2	10.9		0		0
scg2		4/19/2006	7:18:45	9.74	-0.2	CC89066/cg2	O2	12.9	CO2	10.9		0		0
scg2		4/19/2006	7:19:00	10.62	0.0	CC89066/cg2	O2	12.9	CO2	10.9		0		0
scg2		4/19/2006	7:19:15	10.69	0.0	CC89066/cg2	O2	12.9	CO2	10.9		0		0
scg2		4/19/2006	7:19:30	10.72	0.0	CC89066/cg2	O2	12.9	CO2	10.9		0		0
co2span1		4/19/2006	7:19:30	10.72	0.0	CC89066/cg2	O2	12.9	CO2	10.9		0		0
o2span1		4/19/2006	7:19:15	10.69	0.0	CC89066/cg2	O2	12.9	CO2	10.9		0		0
scg4		4/19/2006	7:19:45	10.75	0.0	CC150094/cg4	NOx	243	SO2	448		0		0
scg4		4/19/2006	7:20:00	10.76	-0.2	CC150094/cg4	NOx	243	SO2	448		0		0
scg4		4/19/2006	7:19:15	10.77	-0.2	CC150094/cg4	NOx	243	SO2	448		0		0
scg4		4/19/2006	7:19:45	10.78	0.0	CC150094/cg4	NOx	243	SO2	448		0		0
scg4		4/19/2006	7:20:00	10.79	0.0	CC150094/cg4	NOx	243	SO2	448		0		0
scg4		4/19/2006	7:19:15	10.80	0.0	CC150094/cg4	NOx	243	SO2	448		0		0
scg4		4/19/2006	7:19:45	10.80	0.0	CC150094/cg4	NOx	243	SO2	448		0		0
scg4		4/19/2006	7:20:00	10.80	0.0	CC150094/cg4	NOx	243	SO2	448		0		0
scg4		4/19/2006	7:19:15	9.37	0.1	CC150094/cg4	NOx	243	SO2	448		0		0
scg4		4/19/2006	7:19:45	8.61	1.0	CC150094/cg4	NOx	243	SO2	448		0		0
scg4		4/19/2006	7:20:00	8.60	1.9	CC150094/cg4	NOx	243	SO2	448		0		0
scg4		4/19/2006	7:19:15	8.59	1.8	CC150094/cg4	NOx	243	SO2	448		0		0
scg4		4/19/2006	7:19:45	8.58	2.2	CC150094/cg4	NOx	243	SO2	448		0		0
scg4		4/19/2006	7:20:00	8.59	2.0	CC150094/cg4	NOx	243	SO2	448		0		0
scg4		4/19/2006	7:19:15	8.58	1.9	CC150094/cg4	NOx	243	SO2	448		0		0

filename		4/19/2006	7:51:00								
testby1	C.E.M. Solutions, Inc.										
testby2	7990 W. Gulf to Lake Hwy.										
testby3	Crystal River, FL 34429										
testby4	Ph: 352-564-0441										
testfor1	Progress Energy Florida										
testfor2	Crystal River										
testfor3	Unit 5										
testfor4	Pt. 75 High Load Gas and Flow RATA										
name				5 CO2	5 CO						
sn				01415D/3379	48C-74094-375						
offset				0	0						
fullscale				20	1000						
train				1	1						
gastype				co2 3a	co 10						
scg4		4/19/2006	7:19:45	8.58	2.1	CC150094/cg4	NOx	243	SO2	448	0	0
noxspan1		4/19/2006	7:23:15	8.58	1.9	CC150094/cg4	NOx	243	SO2	448	0	0
so2span1		4/19/2006	7:23:30	8.58	2.1	CC150094/cg4	NOx	243	SO2	448	0	0
scg6		4/19/2006	7:23:45	8.59	2.1	CC183009/cg6	CO	293		0	0	0
scg6		4/19/2006	7:24:00	8.59	2.2	CC183009/cg6	CO	293		0	0	0
scg6		4/19/2006	7:24:15	8.59	2.2	CC183009/cg6	CO	293		0	0	0
scg6		4/19/2006	7:24:30	8.59	2.2	CC183009/cg6	CO	293		0	0	0
scg6		4/19/2006	7:24:45	8.58	2.1	CC183009/cg6	CO	293		0	0	0
scg6		4/19/2006	7:25:00	8.59	2.2	CC183009/cg6	CO	293		0	0	0
scg6		4/19/2006	7:25:15	8.59	1.9	CC183009/cg6	CO	293		0	0	0
scg6		4/19/2006	7:25:30	7.96	6.6	CC183009/cg6	CO	293		0	0	0
scg6		4/19/2006	7:25:45	1.34	83.2	CC183009/cg6	CO	293		0	0	0
scg6		4/19/2006	7:26:00	0.26	217.1	CC183009/cg6	CO	293		0	0	0
scg6		4/19/2006	7:26:15	0.19	275.3	CC183009/cg6	CO	293		0	0	0
scg6		4/19/2006	7:26:30	0.16	288.5	CC183009/cg6	CO	293		0	0	0
scg6		4/19/2006	7:26:45	0.14	290.3	CC183009/cg6	CO	293		0	0	0
cospan1		4/19/2006	7:27:00	0.14	290.3	CC183009/cg6	CO	293		0	0	0
run1		4/19/2006	8:59:45	13.16	5.0							
run1		4/19/2006	9:00:00	13.17	6.4							
run1		4/19/2006	9:00:15	13.18	7.7							
run1		4/19/2006	9:00:30	13.18	8.6							
run1		4/19/2006	9:00:45	13.17	7.3							
run1		4/19/2006	9:01:00	13.11	6.2							
run1		4/19/2006	9:01:15	13.20	5.3							
run1		4/19/2006	9:01:30	13.17	4.9							
run1		4/19/2006	9:01:45	13.17	4.7							
run1		4/19/2006	9:02:00	13.22	6.4							
run1		4/19/2006	9:02:15	13.23	8.7							
run1		4/19/2006	9:02:30	13.30	7.9							
run1		4/19/2006	9:02:45	13.23	7.5							
run1		4/19/2006	9:03:00	13.22	5.9							
run1		4/19/2006	9:03:15	13.17	5.1							
run1		4/19/2006	9:03:30	13.14	4.7							
run1		4/19/2006	9:03:45	13.26	7.7							
run1		4/19/2006	9:04:00	13.22	14.8							
run1		4/19/2006	9:04:15	13.18	13.0							
run1		4/19/2006	9:04:30	13.12	7.6							
run1		4/19/2006	9:04:45	13.16	5.1							
run1		4/19/2006	9:05:00	13.22	7.8							
run1		4/19/2006	9:05:15	13.28	10.7							
run1		4/19/2006	9:05:30	13.24	9.6							
run1		4/19/2006	9:05:45	13.17	7.2							
run1		4/19/2006	9:06:00	13.21	10.4							
run1		4/19/2006	9:06:15	13.24	17.4							
run1		4/19/2006	9:06:30	13.32	26.5							
run1		4/19/2006	9:06:45	13.18	24.9							
run1		4/19/2006	9:07:00	13.17	13.9							
run1		4/19/2006	9:07:15	13.14	8.5							
run1		4/19/2006	9:07:30	13.21	7.5							
run1		4/19/2006	9:07:45	13.25	8.4							
run1		4/19/2006	9:08:00	13.15	5.9							
run1		4/19/2006	9:08:15	13.15	4.6							
run1		4/19/2006	9:08:30	13.12	5.1							
run1		4/19/2006	9:08:45	13.23	5.7							
run1		4/19/2006	9:09:00	13.20	6.1							
run1		4/19/2006	9:09:15	13.19	6.4							
run1		4/19/2006	9:09:30	13.21	8.7							
run1		4/19/2006	9:09:45	13.14	13.8							
run1		4/19/2006	9:10:00	13.18	11.1							
run1		4/19/2006	9:10:15	13.21	6.8							
run1		4/19/2006	9:10:30	13.20	4.9							
run1		4/19/2006	9:10:45	13.12	3.6							
run1		4/19/2006	9:11:00	13.19	4.3							
run1		4/19/2006	9:11:15	13.20	9.0							
run1		4/19/2006	9:11:30	13.21	11.3							
run1		4/19/2006	9:11:45	13.21	11.5							
run1		4/19/2006	9:12:00	13.15	8.3							
run1		4/19/2006	9:12:15	13.16	4.9							
run1		4/19/2006	9:12:30	13.14	3.9							
run1		4/19/2006	9:12:45	13.23	4.2							
run1		4/19/2006	9:13:00	13.21	4.2							
run1		4/19/2006	9:13:15	13.14	3.4							
run1		4/19/2006	9:13:30	13.17	2.7							
run1		4/19/2006	9:13:45	13.20	3.4							

filename		4/19/2006	7:51:00									
testby1	C.E.M. Solutions, Inc.											
testby2	7990 W. Gulf to Lake Hwy.											
testby3	Crystal River, FL 34429											
testby4	Ph: 352-564-0441											
testfor1	Progress Energy Florida											
testfor2	Crystal River											
testfor3	Unit 5											
testfor4	Pt. 75 High Load Gas and Flow RATA											
name				5 CO2	5 CO							
sn				01415D/3379	48C-74094-375							
offset				0	0							
fullscale				20	1000							
train				1	1							
gastype				co2 3a	co 10							
run1		4/19/2006	9:14:00	13.24	6.4							
run1		4/19/2006	9:14:15	13.14	6.5							
run1		4/19/2006	9:14:30	13.16	4.9							
run1		4/19/2006	9:14:45	13.17	4.5							
run1		4/19/2006	9:15:00	13.18	6.7							
run1		4/19/2006	9:15:15	13.19	7.9							
run1		4/19/2006	9:15:30	13.15	6.9							
run1		4/19/2006	9:15:45	13.18	7.4							
run1		4/19/2006	9:16:00	13.16	8.6							
run1		4/19/2006	9:16:15	13.16	6.9							
run1		4/19/2006	9:16:30	13.16	3.9							
run1		4/19/2006	9:16:45	13.18	3.2							
run1		4/19/2006	9:17:00	13.16	4.1							
run1		4/19/2006	9:17:15	13.16	5.1							
run1		4/19/2006	9:17:30	13.13	5.1							
run1		4/19/2006	9:17:45	13.17	5.1							
run1		4/19/2006	9:18:00	13.22	6.1							
run1		4/19/2006	9:18:15	13.12	5.5							
run1		4/19/2006	9:18:30	13.15	4.5							
run1		4/19/2006	9:18:45	13.11	5.1							
run1		4/19/2006	9:19:00	13.21	6.3							
run1		4/19/2006	9:19:15	13.26	8.1							
run1		4/19/2006	9:19:30	13.15	6.3							
run1		4/19/2006	9:19:45	13.16	5.5							
run1		4/19/2006	9:20:00	13.11	5.1							
run1		4/19/2006	9:20:15	13.17	5.1							
run1		4/19/2006	9:20:30	13.19	4.2							
run1		4/19/2006	9:20:45	13.12	4.2							
run1		4/19/2006	9:21:00	13.15	5.4							
run1		4/19/2006	9:21:15	13.10	6.8							
run1		4/19/2006	9:21:30	13.19	7.1							
run1		4/19/2006	9:21:45	13.21	6.4							
run1		4/19/2006	9:22:00	13.19	5.2							
run1		4/19/2006	9:22:15	13.17	6.4							
run1		4/19/2006	9:22:30	13.16	6.8							
run1		4/19/2006	9:22:45	13.16	5.5							
averun1		4/19/2006	9:02:00	13.18	7.3	21						
scg4		4/19/2006	9:23:15	13.15	5.2	CC150094/cg4	NOx	243	SO2	448	0	0
scg4		4/19/2006	9:23:30	13.15	3.6	CC150094/cg4	NOx	243	SO2	448	0	0
scg4		4/19/2006	9:23:45	13.20	3.2	CC150094/cg4	NOx	243	SO2	448	0	0
scg4		4/19/2006	9:24:00	13.12	3.3	CC150094/cg4	NOx	243	SO2	448	0	0
scg4		4/19/2006	9:24:15	13.23	4.8	CC150094/cg4	NOx	243	SO2	448	0	0
scg4		4/19/2006	9:24:30	11.16	17.3	CC150094/cg4	NOx	243	SO2	448	0	0
scg4		4/19/2006	9:24:45	1.77	97.5	CC150094/cg4	NOx	243	SO2	448	0	0
scg4		4/19/2006	9:25:00	3.37	185.9	CC150094/cg4	NOx	243	SO2	448	0	0
scg4		4/19/2006	9:25:15	8.35	115.0	CC150094/cg4	NOx	243	SO2	448	0	0
scg4		4/19/2006	9:25:30	8.59	27.5	CC150094/cg4	NOx	243	SO2	448	0	0
scg4		4/19/2006	9:25:45	8.61	4.9	CC150094/cg4	NOx	243	SO2	448	0	0
scg4		4/19/2006	9:26:00	8.62	1.9	CC150094/cg4	NOx	243	SO2	448	0	0
scg4		4/19/2006	9:26:15	8.62	2.1	CC150094/cg4	NOx	243	SO2	448	0	0
scg4		4/19/2006	9:26:30	8.62	2.2	CC150094/cg4	NOx	243	SO2	448	0	0
scg4		4/19/2006	9:26:45	8.62	2.1	CC150094/cg4	NOx	243	SO2	448	0	0
scg4		4/19/2006	9:27:00	8.62	2.2	CC150094/cg4	NOx	243	SO2	448	0	0
noxspan1		4/19/2006	9:26:30	8.62	2.2	CC150094/cg4	NOx	243	SO2	448	0	0
so2span1		4/19/2006	9:26:45	8.62	2.1	CC150094/cg4	NOx	243	SO2	448	0	0
scg6		4/19/2006	9:27:15	8.63	2.1	CC183009/cg6	CO	293		0	0	0
scg6		4/19/2006	9:27:30	8.63	2.2	CC183009/cg6	CO	293		0	0	0
scg6		4/19/2006	9:27:45	8.63	2.1	CC183009/cg6	CO	293		0	0	0
scg6		4/19/2006	9:28:00	8.63	2.2	CC183009/cg6	CO	293		0	0	0
scg6		4/19/2006	9:28:15	8.63	2.0	CC183009/cg6	CO	293		0	0	0
scg6		4/19/2006	9:28:30	8.63	2.1	CC183009/cg6	CO	293		0	0	0
scg6		4/19/2006	9:28:45	8.63	2.1	CC183009/cg6	CO	293		0	0	0
scg6		4/19/2006	9:29:00	7.04	15.3	CC183009/cg6	CO	293		0	0	0
scg6		4/19/2006	9:29:15	0.83	102.5	CC183009/cg6	CO	293		0	0	0
scg6		4/19/2006	9:29:30	0.25	235.0	CC183009/cg6	CO	293		0	0	0
scg6		4/19/2006	9:29:45	0.20	279.9	CC183009/cg6	CO	293		0	0	0
scg6		4/19/2006	9:30:00	0.17	288.8	CC183009/cg6	CO	293		0	0	0
scg6		4/19/2006	9:30:15	0.15	289.4	CC183009/cg6	CO	293		0	0	0
scg6		4/19/2006	9:30:30	0.14	289.1	CC183009/cg6	CO	293		0	0	0
cospan1		4/19/2006	9:30:15	0.15	289.4	CC183009/cg6	CO	293		0	0	0
scg2		4/19/2006	9:30:45	0.13	289.8	CC89066/cg2	O2	12.9	CO2	10.9	0	0
scg2		4/19/2006	9:31:00	0.12	290.7	CC89066/cg2	O2	12.9	CO2	10.9	0	0
scg2		4/19/2006	9:31:15	0.12	290.1	CC89066/cg2	O2	12.9	CO2	10.9	0	0
scg2		4/19/2006	9:31:30	0.11	289.7	CC89066/cg2	O2	12.9	CO2	10.9	0	0

filename		4/19/2006	7:51:00												
testby1	C.E.M. Solutions, Inc.														
testby2	7990 W. Gulf to Lake Hwy.														
testby3	Crystal River, FL 34429														
testby4	Ph: 352-564-0441														
testfor1	Progress Energy Florida														
testfor2	Crystal River														
testfor3	Unit 5														
testfor4	Pt. 75 High Load Gas and Flow RATA														
name				5 CO2	5 CO										
sn				01415D/3379	48C-74094-375										
offset				0	0										
fullscale				20	1000										
train				1	1										
gastype				co2 3a	co 10										
scg2		4/19/2006	9:31:45	0.10	290.3	CC89066/cg2	O2	12.9	CO2	10.9	0	0			
scg2		4/19/2006	9:32:00	0.10	290.4	CC89066/cg2	O2	12.9	CO2	10.9	0	0			
scg2		4/19/2006	9:32:15	0.10	290.2	CC89066/cg2	O2	12.9	CO2	10.9	0	0			
scg2		4/19/2006	9:32:30	2.07	265.7	CC89066/cg2	O2	12.9	CO2	10.9	0	0			
scg2		4/19/2006	9:32:45	9.87	156.5	CC89066/cg2	O2	12.9	CO2	10.9	0	0			
scg2		4/19/2006	9:33:00	10.69	41.0	CC89066/cg2	O2	12.9	CO2	10.9	0	0			
scg2		4/19/2006	9:33:15	10.76	8.5	CC89066/cg2	O2	12.9	CO2	10.9	0	0			
scg2		4/19/2006	9:33:30	10.79	-0.2	CC89066/cg2	O2	12.9	CO2	10.9	0	0			
co2span1		4/19/2006	9:33:15	10.76	8.5	CC89066/cg2	O2	12.9	CO2	10.9	0	0			
o2span1		4/19/2006	9:33:15	10.76	8.5	CC89066/cg2	O2	12.9	CO2	10.9	0	0			
scg1		4/19/2006	9:33:45	10.81	-0.2	CC 81224/cg1	CO2	0	NOx	0	SO2	0	O2	0	
scg1		4/19/2006	9:34:00	10.83	-0.2	CC 81224/cg1	CO2	0	NOx	0	SO2	0	O2	0	
scg1		4/19/2006	9:34:15	10.84	0.0	CC 81224/cg1	CO2	0	NOx	0	SO2	0	O2	0	
scg1		4/19/2006	9:34:30	10.84	0.0	CC 81224/cg1	CO2	0	NOx	0	SO2	0	O2	0	
scg1		4/19/2006	9:34:45	10.85	0.0	CC 81224/cg1	CO2	0	NOx	0	SO2	0	O2	0	
scg1		4/19/2006	9:35:00	10.85	0.0	CC 81224/cg1	CO2	0	NOx	0	SO2	0	O2	0	
scg1		4/19/2006	9:35:15	10.86	0.0	CC 81224/cg1	CO2	0	NOx	0	SO2	0	O2	0	
scg1		4/19/2006	9:35:30	7.40	0.0	CC 81224/cg1	CO2	0	NOx	0	SO2	0	O2	0	
scg1		4/19/2006	9:35:45	0.64	0.0	CC 81224/cg1	CO2	0	NOx	0	SO2	0	O2	0	
scg1		4/19/2006	9:36:00	0.25	0.0	CC 81224/cg1	CO2	0	NOx	0	SO2	0	O2	0	
scg1		4/19/2006	9:36:15	0.19	-0.2	CC 81224/cg1	CO2	0	NOx	0	SO2	0	O2	0	
scg1		4/19/2006	9:36:30	0.16	0.0	CC 81224/cg1	CO2	0	NOx	0	SO2	0	O2	0	
scg1		4/19/2006	9:36:45	0.15	0.0	CC 81224/cg1	CO2	0	NOx	0	SO2	0	O2	0	
co2zero1		4/19/2006	9:36:45	0.15	0.0	CC 81224/cg1	CO2	0	NOx	0	SO2	0	O2	0	
o2zero1		4/19/2006	9:36:15	0.19	-0.2	CC 81224/cg1	CO2	0	NOx	0	SO2	0	O2	0	
noxzero1		4/19/2006	9:36:45	0.15	0.0	CC 81224/cg1	CO2	0	NOx	0	SO2	0	O2	0	
so2zero1		4/19/2006	9:36:45	0.15	0.0	CC 81224/cg1	CO2	0	NOx	0	SO2	0	O2	0	
cozero1		4/19/2006	9:36:30	0.16	0.0	CC 81224/cg1	CO2	0	NOx	0	SO2	0	O2	0	
run2		4/19/2006	10:35:15	13.11	4.2										
run2		4/19/2006	10:35:30	13.06	3.7										
run2		4/19/2006	10:35:45	13.10	6.5										
run2		4/19/2006	10:36:00	13.15	9.6										
run2		4/19/2006	10:36:15	13.08	8.6										
run2		4/19/2006	10:36:30	13.08	5.0										
run2		4/19/2006	10:36:45	13.11	4.4										
run2		4/19/2006	10:37:00	13.13	5.7										
run2		4/19/2006	10:37:15	13.24	5.1										
run2		4/19/2006	10:37:30	13.17	3.6										
run2		4/19/2006	10:37:45	13.19	3.0										
run2		4/19/2006	10:38:00	13.15	3.2										
run2		4/19/2006	10:38:15	13.13	4.3										
run2		4/19/2006	10:38:30	13.22	5.1										
run2		4/19/2006	10:38:45	13.16	5.6										
run2		4/19/2006	10:39:00	13.12	7.2										
run2		4/19/2006	10:39:15	13.06	7.1										
run2		4/19/2006	10:39:30	13.13	5.0										
run2		4/19/2006	10:39:45	13.23	4.7										
run2		4/19/2006	10:40:00	13.17	5.1										
run2		4/19/2006	10:40:15	13.14	3.8										
run2		4/19/2006	10:40:30	13.09	3.0										
run2		4/19/2006	10:40:45	13.13	2.9										
run2		4/19/2006	10:41:00	13.14	3.0										
run2		4/19/2006	10:41:15	13.13	3.0										
run2		4/19/2006	10:41:30	13.11	2.4										
run2		4/19/2006	10:41:45	13.15	1.5										
run2		4/19/2006	10:42:00	13.17	1.5										
run2		4/19/2006	10:42:15	13.18	2.5										
run2		4/19/2006	10:42:30	13.19	5.2										
run2		4/19/2006	10:42:45	13.15	6.7										
run2		4/19/2006	10:43:00	13.19	6.7										
run2		4/19/2006	10:43:15	13.13	6.6										
run2		4/19/2006	10:43:30	13.21	5.6										
run2		4/19/2006	10:43:45	13.17	4.2										
run2		4/19/2006	10:44:00	13.11	3.6										
run2		4/19/2006	10:44:15	13.11	2.7										
run2		4/19/2006	10:44:30	13.06	2.4										
run2		4/19/2006	10:44:45	13.17	4.0										
run2		4/19/2006	10:45:00	13.19	8.7										
run2		4/19/2006	10:45:15	13.15	10.3										
run2		4/19/2006	10:45:30	13.09	10.3										
run2		4/19/2006	10:45:45	13.03	7.2										
run2		4/19/2006	10:46:00	13.09	4.0										
run2		4/19/2006	10:46:15	13.09	3.1										
run2		4/19/2006	10:46:30	13.12	3.1										

filename		4/19/2006	7:51:00									
testby1	C.E.M. Solutions, Inc.											
testby2	7990 W. Gulf to Lake Hwy.											
testby3	Crystal River, FL 34429											
testby4	Ph: 352-564-0441											
testfor1	Progress Energy Florida											
testfor2	Crystal River											
testfor3	Unit 5											
testfor4	Pt. 75 High Load Gas and Flow RATA											
name				5 CO2	5 CO							
sn				01415D/3379	48C-74094-375							
offset				0	0							
fullscale				20	1000							
train				1	1							
gastype				co2 3a	co 10							
run2		4/19/2006	10:46:45	13.05	1.9							
run2		4/19/2006	10:47:00	13.06	1.5							
run2		4/19/2006	10:47:15	13.13	3.3							
run2		4/19/2006	10:47:30	13.16	5.0							
run2		4/19/2006	10:47:45	13.16	5.9							
run2		4/19/2006	10:48:00	13.11	4.6							
run2		4/19/2006	10:48:15	13.12	6.7							
run2		4/19/2006	10:48:30	13.14	7.8							
run2		4/19/2006	10:48:45	13.22	5.5							
run2		4/19/2006	10:49:00	13.13	4.2							
run2		4/19/2006	10:49:15	13.12	2.8							
run2		4/19/2006	10:49:30	13.05	2.1							
run2		4/19/2006	10:49:45	13.05	1.8							
run2		4/19/2006	10:50:00	13.15	2.7							
run2		4/19/2006	10:50:15	13.10	4.4							
run2		4/19/2006	10:50:30	13.12	5.7							
run2		4/19/2006	10:50:45	13.08	5.0							
run2		4/19/2006	10:51:00	13.13	3.6							
run2		4/19/2006	10:51:15	13.12	2.5							
run2		4/19/2006	10:51:30	13.15	3.1							
run2		4/19/2006	10:51:45	13.14	6.9							
run2		4/19/2006	10:52:00	13.09	12.7							
run2		4/19/2006	10:52:15	13.06	10.1							
run2		4/19/2006	10:52:30	13.10	5.1							
run2		4/19/2006	10:52:45	13.16	6.4							
run2		4/19/2006	10:53:00	13.15	8.7							
run2		4/19/2006	10:53:15	13.11	6.9							
run2		4/19/2006	10:53:30	13.17	6.1							
run2		4/19/2006	10:53:45	13.24	6.4							
run2		4/19/2006	10:54:00	13.25	6.5							
run2		4/19/2006	10:54:15	13.20	6.1							
run2		4/19/2006	10:54:30	13.21	7.7							
run2		4/19/2006	10:54:45	13.11	8.7							
run2		4/19/2006	10:55:00	13.21	7.9							
run2		4/19/2006	10:55:15	13.19	9.9							
run2		4/19/2006	10:55:30	13.12	8.5							
run2		4/19/2006	10:55:45	13.13	5.7							
run2		4/19/2006	10:56:00	13.07	3.5							
run2		4/19/2006	10:56:15	13.17	3.2							
run2		4/19/2006	10:56:30	13.19	3.0							
run2		4/19/2006	10:56:45	13.17	3.2							
run2		4/19/2006	10:57:00	13.11	3.1							
run2		4/19/2006	10:57:15	13.08	2.8							
run2		4/19/2006	10:57:30	13.13	2.1							
run2		4/19/2006	10:57:45	13.15	2.1							
run2		4/19/2006	10:58:00	13.16	3.1							
run2		4/19/2006	10:58:15	13.17	3.7							
run2		4/19/2006	10:58:30	13.15	5.7							
run2		4/19/2006	10:58:45	13.15	6.1							
run2		4/19/2006	10:59:00	13.14	5.5							
run2		4/19/2006	10:59:15	13.10	3.9							
run2		4/19/2006	10:59:30	13.09	2.5							
run2		4/19/2006	10:59:45	13.07	2.1							
run2		4/19/2006	11:00:00	13.11	3.4							
run2		4/19/2006	11:00:15	13.24	6.7							
run2		4/19/2006	11:00:30	13.16	7.5							
run2		4/19/2006	11:00:45	13.22	7.5							
run2		4/19/2006	11:01:00	13.23	12.9							
averun2		4/19/2006	10:40:00	13.14	4.9	21						
scg4		4/19/2006	11:01:15	13.19	16.3	CC150094/cg4	NOx	243	SO2	448	0	0
scg4		4/19/2006	11:01:30	13.22	13.1	CC150094/cg4	NOx	243	SO2	448	0	0
scg4		4/19/2006	11:01:45	13.20	7.8	CC150094/cg4	NOx	243	SO2	448	0	0
scg4		4/19/2006	11:02:00	13.22	7.1	CC150094/cg4	NOx	243	SO2	448	0	0
scg4		4/19/2006	11:02:15	13.15	6.1	CC150094/cg4	NOx	243	SO2	448	0	0
scg4		4/19/2006	11:02:30	13.17	5.5	CC150094/cg4	NOx	243	SO2	448	0	0
scg4		4/19/2006	11:02:45	13.13	3.7	CC150094/cg4	NOx	243	SO2	448	0	0
scg4		4/19/2006	11:03:00	5.21	3.2	CC150094/cg4	NOx	243	SO2	448	0	0
scg4		4/19/2006	11:03:15	7.08	4.2	CC150094/cg4	NOx	243	SO2	448	0	0
scg4		4/19/2006	11:03:30	8.59	3.3	CC150094/cg4	NOx	243	SO2	448	0	0
scg4		4/19/2006	11:03:45	8.63	1.8	CC150094/cg4	NOx	243	SO2	448	0	0
scg4		4/19/2006	11:04:00	8.64	1.9	CC150094/cg4	NOx	243	SO2	448	0	0
scg4		4/19/2006	11:04:15	8.64	1.9	CC150094/cg4	NOx	243	SO2	448	0	0
scg4		4/19/2006	11:04:30	8.64	1.9	CC150094/cg4	NOx	243	SO2	448	0	0
scg4		4/19/2006	11:04:45	8.64	2.1	CC150094/cg4	NOx	243	SO2	448	0	0

filename	4/19/2006	7:51:00											
testby1	C.E.M. Solutions, Inc.												
testby2	7990 W. Gulf to Lake Hwy.												
testby3	Crystal River, FL 34429												
testby4	Ph: 352-564-0441												
testfor1	Progress Energy Florida												
testfor2	Crystal River												
testfor3	Unit 5												
testfor4	Pt. 75 High Load Gas and Flow RATA												
name			5 CO2	5 CO									
sn			01415D/3379	48C-74094-375									
offset			0	0									
fullscale			20	1000									
train			1	1									
gastype			co2 3a	co 10									
noxspan1	4/19/2006	11:04:45	8.64	2.1	CC150094/cg4	NOx	243	SO2	448		0		0
so2span1	4/19/2006	11:04:45	8.64	2.1	CC150094/cg4	NOx	243	SO2	448		0		0
scg6	4/19/2006	11:05:00	8.64	1.9	CC183009/cg6	CO	293		0		0		0
scg6	4/19/2006	11:05:15	8.64	2.1	CC183009/cg6	CO	293		0		0		0
scg6	4/19/2006	11:05:30	8.64	1.9	CC183009/cg6	CO	293		0		0		0
scg6	4/19/2006	11:05:45	8.64	1.9	CC183009/cg6	CO	293		0		0		0
scg6	4/19/2006	11:06:00	8.64	2.1	CC183009/cg6	CO	293		0		0		0
scg6	4/19/2006	11:06:15	8.64	2.1	CC183009/cg6	CO	293		0		0		0
scg6	4/19/2006	11:06:30	8.64	2.0	CC183009/cg6	CO	293		0		0		0
scg6	4/19/2006	11:06:45	8.62	3.1	CC183009/cg6	CO	293		0		0		0
scg6	4/19/2006	11:07:00	3.43	41.9	CC183009/cg6	CO	293		0		0		0
scg6	4/19/2006	11:07:15	0.35	177.8	CC183009/cg6	CO	293		0		0		0
scg6	4/19/2006	11:07:30	0.23	259.8	CC183009/cg6	CO	293		0		0		0
scg6	4/19/2006	11:07:45	0.19	287.0	CC183009/cg6	CO	293		0		0		0
scg6	4/19/2006	11:08:00	0.16	288.4	CC183009/cg6	CO	293		0		0		0
cospan1	4/19/2006	11:08:00	0.16	288.4	CC183009/cg6	CO	293		0		0		0
scg2	4/19/2006	11:08:15	0.15	289.7	CC89066/cg2	O2	12.9	CO2	10.9		0		0
scg2	4/19/2006	11:08:30	0.14	289.7	CC89066/cg2	O2	12.9	CO2	10.9		0		0
scg2	4/19/2006	11:08:45	0.13	289.4	CC89066/cg2	O2	12.9	CO2	10.9		0		0
scg2	4/19/2006	11:09:00	0.12	289.2	CC89066/cg2	O2	12.9	CO2	10.9		0		0
scg2	4/19/2006	11:09:15	0.11	290.4	CC89066/cg2	O2	12.9	CO2	10.9		0		0
scg2	4/19/2006	11:09:30	0.11	290.4	CC89066/cg2	O2	12.9	CO2	10.9		0		0
scg2	4/19/2006	11:09:45	0.10	289.7	CC89066/cg2	O2	12.9	CO2	10.9		0		0
scg2	4/19/2006	11:10:00	3.43	262.9	CC89066/cg2	O2	12.9	CO2	10.9		0		0
scg2	4/19/2006	11:10:15	10.29	115.7	CC89066/cg2	O2	12.9	CO2	10.9		0		0
scg2	4/19/2006	11:10:30	10.73	34.6	CC89066/cg2	O2	12.9	CO2	10.9		0		0
scg2	4/19/2006	11:10:45	10.79	3.9	CC89066/cg2	O2	12.9	CO2	10.9		0		0
co2span1	4/19/2006	11:10:45	10.79	3.9	CC89066/cg2	O2	12.9	CO2	10.9		0		0
o2span1	4/19/2006	11:10:45	10.79	3.9	CC89066/cg2	O2	12.9	CO2	10.9		0		0
scg1	4/19/2006	11:11:00	10.81	0.3	CC 81224/cg1	CO2	0	NOx	0	SO2	0	O2	0
scg1	4/19/2006	11:11:15	10.83	0.0	CC 81224/cg1	CO2	0	NOx	0	SO2	0	O2	0
scg1	4/19/2006	11:11:30	10.85	0.0	CC 81224/cg1	CO2	0	NOx	0	SO2	0	O2	0
scg1	4/19/2006	11:11:45	10.85	-0.2	CC 81224/cg1	CO2	0	NOx	0	SO2	0	O2	0
scg1	4/19/2006	11:12:00	10.86	0.0	CC 81224/cg1	CO2	0	NOx	0	SO2	0	O2	0
scg1	4/19/2006	11:12:15	10.87	0.0	CC 81224/cg1	CO2	0	NOx	0	SO2	0	O2	0
scg1	4/19/2006	11:12:30	10.87	0.0	CC 81224/cg1	CO2	0	NOx	0	SO2	0	O2	0
scg1	4/19/2006	11:12:45	9.37	0.0	CC 81224/cg1	CO2	0	NOx	0	SO2	0	O2	0
scg1	4/19/2006	11:13:00	1.19	0.0	CC 81224/cg1	CO2	0	NOx	0	SO2	0	O2	0
scg1	4/19/2006	11:13:15	0.27	-0.4	CC 81224/cg1	CO2	0	NOx	0	SO2	0	O2	0
scg1	4/19/2006	11:13:31	0.21	-0.2	CC 81224/cg1	CO2	0	NOx	0	SO2	0	O2	0
co2zero1	4/19/2006	11:13:31	0.21	-0.2	CC 81224/cg1	CO2	0	NOx	0	SO2	0	O2	0
o2zero1	4/19/2006	11:13:15	0.27	-0.4	CC 81224/cg1	CO2	0	NOx	0	SO2	0	O2	0
noxzero1	4/19/2006	11:13:31	0.21	-0.2	CC 81224/cg1	CO2	0	NOx	0	SO2	0	O2	0
so2zero1	4/19/2006	11:12:45	9.37	0.0	CC 81224/cg1	CO2	0	NOx	0	SO2	0	O2	0
cozero1	4/19/2006	11:11:15	10.83	0.0	CC 81224/cg1	CO2	0	NOx	0	SO2	0	O2	0
run3	4/19/2006	11:21:30	13.10	2.8									
run3	4/19/2006	11:21:45	13.08	3.2									
run3	4/19/2006	11:22:00	13.16	2.9									
run3	4/19/2006	11:22:15	13.14	4.5									
run3	4/19/2006	11:22:30	13.11	5.1									
run3	4/19/2006	11:22:45	13.14	3.8									
run3	4/19/2006	11:23:00	13.14	3.2									
run3	4/19/2006	11:23:15	13.20	2.0									
run3	4/19/2006	11:23:30	13.20	2.7									
run3	4/19/2006	11:23:45	13.20	3.1									
run3	4/19/2006	11:24:00	13.05	3.2									
run3	4/19/2006	11:24:15	13.08	3.1									
run3	4/19/2006	11:24:30	13.23	3.9									
run3	4/19/2006	11:24:45	13.24	5.5									
run3	4/19/2006	11:25:00	13.23	5.4									
run3	4/19/2006	11:25:15	13.16	3.8									
run3	4/19/2006	11:25:30	13.12	2.5									
run3	4/19/2006	11:25:45	13.16	5.2									
run3	4/19/2006	11:26:00	13.14	6.9									
run3	4/19/2006	11:26:15	13.10	3.9									
run3	4/19/2006	11:26:30	13.09	2.3									
run3	4/19/2006	11:26:45	13.15	2.4									
run3	4/19/2006	11:27:00	13.16	3.2									
run3	4/19/2006	11:27:15	13.18	4.7									
run3	4/19/2006	11:27:30	13.14	9.2									
run3	4/19/2006	11:27:45	13.16	10.0									
run3	4/19/2006	11:28:00	13.16	8.8									
run3	4/19/2006	11:28:15	13.12	5.9									
run3	4/19/2006	11:28:30	13.14	4.4									

filename		4/19/2006	7:51:00		
testby1	C.E.M. Solutions, Inc.				
testby2	7990 W. Gulf to Lake Hwy.				
testby3	Crystal River, FL 34429				
testby4	Ph: 352-564-0441				
testfor1	Progress Energy Florida				
testfor2	Crystal River				
testfor3	Unit 5				
testfor4	Pt. 75 High Load Gas and Flow RATA				
name				5 CO2	5 CO
sn				01415D/3379	48C-74094-375
offset				0	0
fullscale				20	1000
train				1	1
gastype				co2 3a	co 10
run3		4/19/2006	11:28:45	13.17	4.5
run3		4/19/2006	11:29:00	13.26	5.3
run3		4/19/2006	11:29:15	13.15	8.2
run3		4/19/2006	11:29:30	13.18	9.0
run3		4/19/2006	11:29:45	13.19	7.7
run3		4/19/2006	11:30:00	13.11	6.4
run3		4/19/2006	11:30:15	13.14	5.7
run3		4/19/2006	11:30:30	13.07	4.4
run3		4/19/2006	11:30:45	13.15	4.2
run3		4/19/2006	11:31:00	13.14	3.7
run3		4/19/2006	11:31:15	13.15	4.5
run3		4/19/2006	11:31:30	13.14	5.8
run3		4/19/2006	11:31:45	13.09	5.1
run3		4/19/2006	11:32:00	13.07	5.1
run3		4/19/2006	11:32:15	13.09	4.7
run3		4/19/2006	11:32:30	13.13	4.2
run3		4/19/2006	11:32:45	13.11	4.2
run3		4/19/2006	11:33:00	13.11	3.4
run3		4/19/2006	11:33:15	13.06	2.5
run3		4/19/2006	11:33:30	13.19	1.9
run3		4/19/2006	11:33:45	13.16	1.8
run3		4/19/2006	11:34:00	13.09	2.1
run3		4/19/2006	11:34:15	13.11	2.1
run3		4/19/2006	11:34:30	13.09	2.8
run3		4/19/2006	11:34:45	13.24	5.3
run3		4/19/2006	11:35:00	13.23	9.5
run3		4/19/2006	11:35:15	13.25	17.1
run3		4/19/2006	11:35:30	13.18	16.4
run3		4/19/2006	11:35:45	13.16	9.9
run3		4/19/2006	11:36:00	13.20	6.6
run3		4/19/2006	11:36:15	13.12	4.3
run3		4/19/2006	11:36:30	13.11	2.4
run3		4/19/2006	11:36:45	13.08	2.5
run3		4/19/2006	11:37:00	13.11	3.9
run3		4/19/2006	11:37:15	13.19	5.1
run3		4/19/2006	11:37:30	13.19	5.1
run3		4/19/2006	11:37:45	13.10	3.3
run3		4/19/2006	11:38:00	13.10	2.2
run3		4/19/2006	11:38:15	13.13	1.9
run3		4/19/2006	11:38:30	13.14	2.2
run3		4/19/2006	11:38:45	13.20	3.1
run3		4/19/2006	11:39:00	13.14	4.1
run3		4/19/2006	11:39:15	13.22	6.9
run3		4/19/2006	11:39:30	13.19	7.0
run3		4/19/2006	11:39:45	13.22	4.7
run3		4/19/2006	11:40:00	13.17	3.3
run3		4/19/2006	11:40:15	13.09	2.5
run3		4/19/2006	11:40:30	13.19	3.1
run3		4/19/2006	11:40:45	13.22	5.9
run3		4/19/2006	11:41:00	13.25	9.6
run3		4/19/2006	11:41:15	13.22	12.9
run3		4/19/2006	11:41:30	13.20	11.8
run3		4/19/2006	11:41:45	13.25	6.5
run3		4/19/2006	11:42:00	13.13	4.3
run3		4/19/2006	11:42:15	13.12	2.5
run3		4/19/2006	11:42:30	13.12	2.1
run3		4/19/2006	11:42:45	13.12	1.7
run3		4/19/2006	11:43:00	13.10	2.9
run3		4/19/2006	11:43:15	13.13	4.0
run3		4/19/2006	11:43:30	13.18	7.6
run3		4/19/2006	11:43:45	13.35	12.5
run3		4/19/2006	11:44:00	13.34	13.9
run3		4/19/2006	11:44:15	13.24	12.0
run3		4/19/2006	11:44:30	13.19	11.3
run3		4/19/2006	11:44:45	13.14	9.6
run3		4/19/2006	11:45:00	13.19	7.5
run3		4/19/2006	11:45:15	13.15	7.0
run3		4/19/2006	11:45:30	13.19	13.9
run3		4/19/2006	11:45:45	13.19	14.9
run3		4/19/2006	11:46:00	13.14	11.7
run3		4/19/2006	11:46:15	13.21	8.2
run3		4/19/2006	11:46:30	13.15	4.8
run3		4/19/2006	11:46:45	13.22	4.2
run3		4/19/2006	11:47:00	13.18	4.2

filename		4/19/2006	7:51:00											
testby1	C.E.M. Solutions, Inc.													
testby2	7990 W. Gulf to Lake Hwy.													
testby3	Crystal River, FL 34429													
testby4	Ph: 352-564-0441													
testfor1	Progress Energy Florida													
testfor2	Crystal River													
testfor3	Unit 5													
testfor4	Pt. 75 High Load Gas and Flow RATA													
name				5 CO2	5 CO									
sn				01415D/3379	48C-74094-375									
offset				0	0									
fullscale				20	1000									
train				1	1									
gastype				co2 3a	co 10									
run3		4/19/2006	11:47:15	13.15	4.2									
run3		4/19/2006	11:47:30	13.24	4.2									
run3		4/19/2006	11:47:45	13.22	4.2									
averun3		4/19/2006	11:27:00	13.16	6.0	21								
scg4		4/19/2006	11:48:00	13.22	5.0	CC150094/cg4	NOx	243	SO2	448		0		0
scg4		4/19/2006	11:48:15	13.18	5.4	CC150094/cg4	NOx	243	SO2	448		0		0
scg4		4/19/2006	11:48:30	13.19	4.4	CC150094/cg4	NOx	243	SO2	448		0		0
scg4		4/19/2006	11:48:45	13.16	3.5	CC150094/cg4	NOx	243	SO2	448		0		0
scg4		4/19/2006	11:49:00	13.18	3.3	CC150094/cg4	NOx	243	SO2	448		0		0
scg4		4/19/2006	11:49:15	13.13	4.2	CC150094/cg4	NOx	243	SO2	448		0		0
scg4		4/19/2006	11:49:30	10.24	4.0	CC150094/cg4	NOx	243	SO2	448		0		0
scg4		4/19/2006	11:49:45	4.17	3.2	CC150094/cg4	NOx	243	SO2	448		0		0
scg4		4/19/2006	11:50:00	8.40	2.3	CC150094/cg4	NOx	243	SO2	448		0		0
scg4		4/19/2006	11:50:15	8.62	2.1	CC150094/cg4	NOx	243	SO2	448		0		0
scg4		4/19/2006	11:50:30	8.64	2.1	CC150094/cg4	NOx	243	SO2	448		0		0
scg4		4/19/2006	11:50:45	8.64	2.1	CC150094/cg4	NOx	243	SO2	448		0		0
scg4		4/19/2006	11:51:00	8.64	2.1	CC150094/cg4	NOx	243	SO2	448		0		0
scg4		4/19/2006	11:51:15	8.64	1.9	CC150094/cg4	NOx	243	SO2	448		0		0
scg4		4/19/2006	11:51:30	8.64	1.7	CC150094/cg4	NOx	243	SO2	448		0		0
noxspan1		4/19/2006	11:51:30	8.64	1.7	CC150094/cg4	NOx	243	SO2	448		0		0
so2span1		4/19/2006	11:51:30	8.64	1.7	CC150094/cg4	NOx	243	SO2	448		0		0
scg6		4/19/2006	11:51:45	8.64	2.1	CC183009/cg6	CO	293		0		0		0
scg6		4/19/2006	11:52:00	8.64	2.1	CC183009/cg6	CO	293		0		0		0
scg6		4/19/2006	11:52:15	8.65	2.1	CC183009/cg6	CO	293		0		0		0
scg6		4/19/2006	11:52:30	8.64	1.3	CC183009/cg6	CO	293		0		0		0
scg6		4/19/2006	11:52:45	8.64	2.0	CC183009/cg6	CO	293		0		0		0
scg6		4/19/2006	11:53:00	8.65	1.9	CC183009/cg6	CO	293		0		0		0
scg6		4/19/2006	11:53:15	8.64	2.1	CC183009/cg6	CO	293		0		0		0
scg6		4/19/2006	11:53:30	8.07	6.5	CC183009/cg6	CO	293		0		0		0
scg6		4/19/2006	11:53:45	1.42	84.1	CC183009/cg6	CO	293		0		0		0
scg6		4/19/2006	11:54:00	0.28	209.4	CC183009/cg6	CO	293		0		0		0
scg6		4/19/2006	11:54:15	0.21	274.9	CC183009/cg6	CO	293		0		0		0
scg6		4/19/2006	11:54:30	0.18	287.2	CC183009/cg6	CO	293		0		0		0
scg6		4/19/2006	11:54:45	0.16	288.7	CC183009/cg6	CO	293		0		0		0
cospan1		4/19/2006	11:54:45	0.16	288.7	CC183009/cg6	CO	293		0		0		0
scg2		4/19/2006	11:55:00	0.15	288.7	CC89066/cg2	O2	12.9	CO2	10.9		0		0
scg2		4/19/2006	11:55:15	0.14	288.9	CC89066/cg2	O2	12.9	CO2	10.9		0		0
scg2		4/19/2006	11:55:30	0.12	289.7	CC89066/cg2	O2	12.9	CO2	10.9		0		0
scg2		4/19/2006	11:55:45	0.12	289.4	CC89066/cg2	O2	12.9	CO2	10.9		0		0
scg2		4/19/2006	11:56:00	0.11	289.5	CC89066/cg2	O2	12.9	CO2	10.9		0		0
scg2		4/19/2006	11:56:15	0.10	290.4	CC89066/cg2	O2	12.9	CO2	10.9		0		0
scg2		4/19/2006	11:56:30	0.10	289.4	CC89066/cg2	O2	12.9	CO2	10.9		0		0
scg2		4/19/2006	11:56:45	3.64	252.5	CC89066/cg2	O2	12.9	CO2	10.9		0		0
scg2		4/19/2006	11:57:00	10.31	126.3	CC89066/cg2	O2	12.9	CO2	10.9		0		0
scg2		4/19/2006	11:57:15	10.73	32.8	CC89066/cg2	O2	12.9	CO2	10.9		0		0
scg2		4/19/2006	11:57:30	10.79	5.5	CC89066/cg2	O2	12.9	CO2	10.9		0		0
scg2		4/19/2006	11:57:45	10.81	0.0	CC89066/cg2	O2	12.9	CO2	10.9		0		0
co2span1		4/19/2006	11:57:45	10.81	0.0	CC89066/cg2	O2	12.9	CO2	10.9		0		0
o2span1		4/19/2006	11:57:45	10.81	0.0	CC89066/cg2	O2	12.9	CO2	10.9		0		0
scg1		4/19/2006	11:58:00	10.84	0.0	CC 81224/cg1	CO2	0	NOx	0	SO2	0	O2	0
scg1		4/19/2006	11:58:15	10.85	0.0	CC 81224/cg1	CO2	0	NOx	0	SO2	0	O2	0
scg1		4/19/2006	11:58:30	10.86	0.0	CC 81224/cg1	CO2	0	NOx	0	SO2	0	O2	0
scg1		4/19/2006	11:58:45	10.86	0.0	CC 81224/cg1	CO2	0	NOx	0	SO2	0	O2	0
scg1		4/19/2006	11:59:00	10.87	-0.4	CC 81224/cg1	CO2	0	NOx	0	SO2	0	O2	0
scg1		4/19/2006	11:59:15	10.87	0.0	CC 81224/cg1	CO2	0	NOx	0	SO2	0	O2	0
scg1		4/19/2006	11:59:30	10.88	-0.2	CC 81224/cg1	CO2	0	NOx	0	SO2	0	O2	0
scg1		4/19/2006	11:59:45	9.92	0.0	CC 81224/cg1	CO2	0	NOx	0	SO2	0	O2	0
scg1		4/19/2006	12:00:00	1.59	-0.2	CC 81224/cg1	CO2	0	NOx	0	SO2	0	O2	0
scg1		4/19/2006	12:00:15	0.29	0.0	CC 81224/cg1	CO2	0	NOx	0	SO2	0	O2	0
scg1		4/19/2006	12:00:30	0.21	0.0	CC 81224/cg1	CO2	0	NOx	0	SO2	0	O2	0
scg1		4/19/2006	12:00:45	0.17	0.0	CC 81224/cg1	CO2	0	NOx	0	SO2	0	O2	0
scg1		4/19/2006	12:01:00	0.16	0.0	CC 81224/cg1	CO2	0	NOx	0	SO2	0	O2	0
co2zero1		4/19/2006	12:01:00	0.16	0.0	CC 81224/cg1	CO2	0	NOx	0	SO2	0	O2	0
o2zero1		4/19/2006	12:00:30	0.21	0.0	CC 81224/cg1	CO2	0	NOx	0	SO2	0	O2	0
noxzero1		4/19/2006	11:59:00	10.87	-0.4	CC 81224/cg1	CO2	0	NOx	0	SO2	0	O2	0
so2zero1		4/19/2006	11:59:15	10.87	0.0	CC 81224/cg1	CO2	0	NOx	0	SO2	0	O2	0
cozero1		4/19/2006	11:58:45	10.86	0.0	CC 81224/cg1	CO2	0	NOx	0	SO2	0	O2	0
run4		4/19/2006	12:06:45	13.13	4.6									
run4		4/19/2006	12:07:00	13.12	4.0									
run4		4/19/2006	12:07:15	13.10	3.0									
run4		4/19/2006	12:07:30	13.10	2.0									
run4		4/19/2006	12:07:45	13.10	2.1									
run4		4/19/2006	12:08:00	13.11	2.1									
run4		4/19/2006	12:08:15	13.02	2.0									

filename		4/19/2006 7:51:00		
testby1	C.E.M. Solutions, Inc.			
testby2	7990 W. Gulf to Lake Hwy.			
testby3	Crystal River, FL 34429			
testby4	Ph: 352-564-0441			
testfor1	Progress Energy Florida			
testfor2	Crystal River			
testfor3	Unit 5			
testfor4	Pt. 75 High Load Gas and Flow RATA			
name			5 CO2	5 CO
sn			01415D/3379	48C-74094-375
offset			0	0
fullscale			20	1000
train			1	1
gastype			co2 3a	co 10
run4		4/19/2006 12:08:30	13.04	2.3
run4		4/19/2006 12:08:45	13.11	4.1
run4		4/19/2006 12:09:00	13.18	5.9
run4		4/19/2006 12:09:15	13.26	6.3
run4		4/19/2006 12:09:30	13.15	7.1
run4		4/19/2006 12:09:45	13.11	6.6
run4		4/19/2006 12:10:00	13.04	5.3
run4		4/19/2006 12:10:15	13.07	4.6
run4		4/19/2006 12:10:30	13.08	4.3
run4		4/19/2006 12:10:45	13.10	5.6
run4		4/19/2006 12:11:00	13.15	7.7
run4		4/19/2006 12:11:15	13.14	9.6
run4		4/19/2006 12:11:30	13.19	10.9
run4		4/19/2006 12:11:45	13.18	8.5
run4		4/19/2006 12:12:00	13.18	6.1
run4		4/19/2006 12:12:15	13.06	3.7
run4		4/19/2006 12:12:30	13.05	2.2
run4		4/19/2006 12:12:45	13.04	3.1
run4		4/19/2006 12:13:00	13.10	5.8
run4		4/19/2006 12:13:15	13.17	5.1
run4		4/19/2006 12:13:30	13.04	3.1
run4		4/19/2006 12:13:45	13.09	1.6
run4		4/19/2006 12:14:00	13.09	2.1
run4		4/19/2006 12:14:15	13.16	3.7
run4		4/19/2006 12:14:30	13.21	6.8
run4		4/19/2006 12:14:45	13.15	11.6
run4		4/19/2006 12:15:00	13.16	9.8
run4		4/19/2006 12:15:15	13.07	6.0
run4		4/19/2006 12:15:30	13.11	3.4
run4		4/19/2006 12:15:45	13.12	3.2
run4		4/19/2006 12:16:00	13.15	4.2
run4		4/19/2006 12:16:15	13.17	6.8
run4		4/19/2006 12:16:30	13.17	8.5
run4		4/19/2006 12:16:45	13.17	8.1
run4		4/19/2006 12:17:00	13.15	7.7
run4		4/19/2006 12:17:15	13.12	5.0
run4		4/19/2006 12:17:30	13.07	4.2
run4		4/19/2006 12:17:45	13.15	5.1
run4		4/19/2006 12:18:00	13.20	8.0
run4		4/19/2006 12:18:15	13.20	10.0
run4		4/19/2006 12:18:30	13.12	13.0
run4		4/19/2006 12:18:45	13.07	13.6
run4		4/19/2006 12:19:00	13.04	8.8
run4		4/19/2006 12:19:15	13.05	5.0
run4		4/19/2006 12:19:30	13.19	3.3
run4		4/19/2006 12:19:45	13.17	4.2
run4		4/19/2006 12:20:00	13.17	3.7
run4		4/19/2006 12:20:15	13.18	7.1
run4		4/19/2006 12:20:30	13.08	8.9
run4		4/19/2006 12:20:45	13.14	7.8
run4		4/19/2006 12:21:00	13.11	9.6
run4		4/19/2006 12:21:15	13.09	8.5
run4		4/19/2006 12:21:30	13.13	9.0
run4		4/19/2006 12:21:45	13.15	9.5
run4		4/19/2006 12:22:00	13.16	6.6
run4		4/19/2006 12:22:15	13.10	5.1
run4		4/19/2006 12:22:30	13.08	4.9
run4		4/19/2006 12:22:45	13.09	4.2
run4		4/19/2006 12:23:00	13.16	4.6
run4		4/19/2006 12:23:15	13.20	7.1
run4		4/19/2006 12:23:30	13.18	8.5
run4		4/19/2006 12:23:45	13.10	6.0
run4		4/19/2006 12:24:00	13.15	5.1
run4		4/19/2006 12:24:15	13.15	6.2
run4		4/19/2006 12:24:30	13.17	6.9
run4		4/19/2006 12:24:45	13.21	5.6
run4		4/19/2006 12:25:00	13.12	3.9
run4		4/19/2006 12:25:15	13.18	3.2
run4		4/19/2006 12:25:30	13.17	4.5
run4		4/19/2006 12:25:45	13.17	6.1
run4		4/19/2006 12:26:00	13.15	6.1
run4		4/19/2006 12:26:15	13.05	6.1
run4		4/19/2006 12:26:30	13.14	7.0
run4		4/19/2006 12:26:45	13.11	6.0

filename		4/19/2006	7:51:00									
testby1	C.E.M. Solutions, Inc.											
testby2	7990 W. Gulf to Lake Hwy.											
testby3	Crystal River, FL 34429											
testby4	Ph: 352-564-0441											
testfor1	Progress Energy Florida											
testfor2	Crystal River											
testfor3	Unit 5											
testfor4	Pt. 75 High Load Gas and Flow RATA											
name				5 CO2	5 CO							
sn				01415D/3379	48C-74094-375							
offset				0	0							
fullscale				20	1000							
train				1	1							
gastype				co2 3a	co 10							
run4		4/19/2006	12:27:00	13.18	5.1							
run4		4/19/2006	12:27:15	13.18	5.1							
run4		4/19/2006	12:27:30	13.13	4.9							
run4		4/19/2006	12:27:45	13.11	4.2							
run4		4/19/2006	12:28:00	13.16	3.9							
run4		4/19/2006	12:28:15	13.15	3.4							
run4		4/19/2006	12:28:30	13.16	3.4							
run4		4/19/2006	12:28:45	13.21	4.7							
run4		4/19/2006	12:29:00	13.15	5.6							
run4		4/19/2006	12:29:15	13.15	8.2							
run4		4/19/2006	12:29:30	13.10	7.7							
run4		4/19/2006	12:29:45	13.17	7.7							
run4		4/19/2006	12:30:00	13.12	12.3							
run4		4/19/2006	12:30:15	13.09	12.9							
run4		4/19/2006	12:30:30	13.12	8.1							
run4		4/19/2006	12:30:45	13.14	6.1							
run4		4/19/2006	12:31:00	13.21	5.0							
run4		4/19/2006	12:31:15	13.10	3.6							
run4		4/19/2006	12:31:30	13.08	4.5							
run4		4/19/2006	12:31:45	13.10	6.1							
run4		4/19/2006	12:32:00	13.15	4.7							
run4		4/19/2006	12:32:15	13.26	3.7							
run4		4/19/2006	12:32:30	13.20	4.4							
run4		4/19/2006	12:32:45	13.14	5.7							
run4		4/19/2006	12:33:00	13.03	5.9							
run4		4/19/2006	12:33:15	13.03	5.1							
run4		4/19/2006	12:33:30	13.09	6.3							
run4		4/19/2006	12:33:45	13.11	7.1							
run4		4/19/2006	12:34:00	13.03	6.2							
run4		4/19/2006	12:34:15	12.99	5.0							
averun4		4/19/2006	12:13:00	13.14	6.2	21						
scg4		4/19/2006	12:34:30	13.07	4.2	CC150094/cg4	NOx	243	SO2	448	0	0
scg4		4/19/2006	12:34:45	13.18	5.3	CC150094/cg4	NOx	243	SO2	448	0	0
scg4		4/19/2006	12:35:00	13.24	9.2	CC150094/cg4	NOx	243	SO2	448	0	0
scg4		4/19/2006	12:35:15	13.07	10.5	CC150094/cg4	NOx	243	SO2	448	0	0
scg4		4/19/2006	12:35:30	13.07	6.7	CC150094/cg4	NOx	243	SO2	448	0	0
scg4		4/19/2006	12:35:45	13.09	5.4	CC150094/cg4	NOx	243	SO2	448	0	0
scg4		4/19/2006	12:36:00	11.72	5.9	CC150094/cg4	NOx	243	SO2	448	0	0
scg4		4/19/2006	12:36:15	3.84	4.5	CC150094/cg4	NOx	243	SO2	448	0	0
scg4		4/19/2006	12:36:30	8.25	2.7	CC150094/cg4	NOx	243	SO2	448	0	0
scg4		4/19/2006	12:36:45	8.62	1.9	CC150094/cg4	NOx	243	SO2	448	0	0
scg4		4/19/2006	12:37:00	8.64	2.1	CC150094/cg4	NOx	243	SO2	448	0	0
scg4		4/19/2006	12:37:15	8.64	2.1	CC150094/cg4	NOx	243	SO2	448	0	0
scg4		4/19/2006	12:37:30	8.64	2.1	CC150094/cg4	NOx	243	SO2	448	0	0
scg4		4/19/2006	12:37:45	8.65	2.1	CC150094/cg4	NOx	243	SO2	448	0	0
noxspan1		4/19/2006	12:37:45	8.65	2.1	CC150094/cg4	NOx	243	SO2	448	0	0
so2span1		4/19/2006	12:37:45	8.65	2.1	CC150094/cg4	NOx	243	SO2	448	0	0
scg6		4/19/2006	12:38:00	8.65	2.0	CC183009/cg6	CO	293		0	0	0
scg6		4/19/2006	12:38:15	8.64	2.1	CC183009/cg6	CO	293		0	0	0
scg6		4/19/2006	12:38:30	8.64	1.8	CC183009/cg6	CO	293		0	0	0
scg6		4/19/2006	12:38:45	8.65	2.1	CC183009/cg6	CO	293		0	0	0
scg6		4/19/2006	12:39:00	8.65	2.2	CC183009/cg6	CO	293		0	0	0
scg6		4/19/2006	12:39:15	8.65	1.9	CC183009/cg6	CO	293		0	0	0
scg6		4/19/2006	12:39:30	8.65	2.1	CC183009/cg6	CO	293		0	0	0
scg6		4/19/2006	12:39:45	8.53	2.7	CC183009/cg6	CO	293		0	0	0
scg6		4/19/2006	12:40:00	2.36	68.7	CC183009/cg6	CO	293		0	0	0
scg6		4/19/2006	12:40:15	0.30	189.9	CC183009/cg6	CO	293		0	0	0
scg6		4/19/2006	12:40:30	0.22	268.8	CC183009/cg6	CO	293		0	0	0
scg6		4/19/2006	12:40:45	0.18	287.9	CC183009/cg6	CO	293		0	0	0
scg6		4/19/2006	12:41:00	0.16	288.5	CC183009/cg6	CO	293		0	0	0
cospan1		4/19/2006	12:40:45	0.18	287.9	CC183009/cg6	CO	293		0	0	0
scg2		4/19/2006	12:41:15	0.15	288.4	CC89066/cg2	O2	12.9	CO2	10.9	0	0
scg2		4/19/2006	12:41:30	0.14	288.4	CC89066/cg2	O2	12.9	CO2	10.9	0	0
scg2		4/19/2006	12:41:45	0.13	289.0	CC89066/cg2	O2	12.9	CO2	10.9	0	0
scg2		4/19/2006	12:42:00	0.12	289.4	CC89066/cg2	O2	12.9	CO2	10.9	0	0
scg2		4/19/2006	12:42:15	0.11	289.4	CC89066/cg2	O2	12.9	CO2	10.9	0	0
scg2		4/19/2006	12:42:30	0.11	289.1	CC89066/cg2	O2	12.9	CO2	10.9	0	0
scg2		4/19/2006	12:42:45	0.10	289.4	CC89066/cg2	O2	12.9	CO2	10.9	0	0
scg2		4/19/2006	12:43:00	5.24	233.7	CC89066/cg2	O2	12.9	CO2	10.9	0	0
scg2		4/19/2006	12:43:15	10.52	109.0	CC89066/cg2	O2	12.9	CO2	10.9	0	0
scg2		4/19/2006	12:43:30	10.75	25.9	CC89066/cg2	O2	12.9	CO2	10.9	0	0
scg2		4/19/2006	12:43:45	10.80	3.2	CC89066/cg2	O2	12.9	CO2	10.9	0	0
co2span1		4/19/2006	12:43:45	10.80	3.2	CC89066/cg2	O2	12.9	CO2	10.9	0	0
o2span1		4/19/2006	12:43:45	10.80	3.2	CC89066/cg2	O2	12.9	CO2	10.9	0	0

filename		4/19/2006	7:51:00										
testby1	C.E.M. Solutions, Inc.												
testby2	7990 W. Gulf to Lake Hwy.												
testby3	Crystal River, FL 34429												
testby4	Ph: 352-564-0441												
testfor1	Progress Energy Florida												
testfor2	Crystal River												
testfor3	Unit 5												
testfor4	Pt. 75 High Load Gas and Flow RATA												
name				5 CO2	5 CO								
sn				01415D/3379	48C-74094-375								
offset				0	0								
fullscale				20	1000								
train				1	1								
gastype				co2 3a	co 10								
scg1		4/19/2006	12:44:00	10.83	-0.2	CC 81224/cg1	CO2	0 NOx	0 SO2	0 O2	0		
scg1		4/19/2006	12:44:15	10.84	0.0	CC 81224/cg1	CO2	0 NOx	0 SO2	0 O2	0		
scg1		4/19/2006	12:44:30	10.85	0.0	CC 81224/cg1	CO2	0 NOx	0 SO2	0 O2	0		
scg1		4/19/2006	12:44:45	10.86	0.0	CC 81224/cg1	CO2	0 NOx	0 SO2	0 O2	0		
scg1		4/19/2006	12:45:00	10.87	0.0	CC 81224/cg1	CO2	0 NOx	0 SO2	0 O2	0		
scg1		4/19/2006	12:45:15	10.88	-0.2	CC 81224/cg1	CO2	0 NOx	0 SO2	0 O2	0		
scg1		4/19/2006	12:45:30	10.88	0.0	CC 81224/cg1	CO2	0 NOx	0 SO2	0 O2	0		
scg1		4/19/2006	12:45:45	10.28	0.0	CC 81224/cg1	CO2	0 NOx	0 SO2	0 O2	0		
scg1		4/19/2006	12:46:00	1.91	0.0	CC 81224/cg1	CO2	0 NOx	0 SO2	0 O2	0		
scg1		4/19/2006	12:46:15	0.30	0.0	CC 81224/cg1	CO2	0 NOx	0 SO2	0 O2	0		
scg1		4/19/2006	12:46:30	0.22	0.0	CC 81224/cg1	CO2	0 NOx	0 SO2	0 O2	0		
co2zero1		4/19/2006	12:46:30	0.22	0.0	CC 81224/cg1	CO2	0 NOx	0 SO2	0 O2	0		
o2zero1		4/19/2006	12:46:30	0.22	0.0	CC 81224/cg1	CO2	0 NOx	0 SO2	0 O2	0		
noxzero1		4/19/2006	12:46:30	0.22	0.0	CC 81224/cg1	CO2	0 NOx	0 SO2	0 O2	0		
so2zero1		4/19/2006	12:46:15	0.30	0.0	CC 81224/cg1	CO2	0 NOx	0 SO2	0 O2	0		
cozero1		4/19/2006	12:46:15	0.30	0.0	CC 81224/cg1	CO2	0 NOx	0 SO2	0 O2	0		
run5		4/19/2006	12:52:00	13.14	5.3								
run5		4/19/2006	12:52:15	13.15	9.4								
run5		4/19/2006	12:52:30	13.07	8.4								
run5		4/19/2006	12:52:45	13.13	6.4								
run5		4/19/2006	12:53:00	13.16	6.1								
run5		4/19/2006	12:53:15	13.10	5.9								
run5		4/19/2006	12:53:30	13.16	6.8								
run5		4/19/2006	12:53:45	13.06	8.1								
run5		4/19/2006	12:54:00	13.11	6.6								
run5		4/19/2006	12:54:15	13.15	4.5								
run5		4/19/2006	12:54:30	13.11	3.2								
run5		4/19/2006	12:54:45	13.11	3.2								
run5		4/19/2006	12:55:00	13.05	4.1								
run5		4/19/2006	12:55:15	13.11	4.2								
run5		4/19/2006	12:55:30	13.10	5.5								
run5		4/19/2006	12:55:45	13.10	6.1								
run5		4/19/2006	12:56:00	13.08	5.2								
run5		4/19/2006	12:56:15	13.10	5.1								
run5		4/19/2006	12:56:30	13.15	6.4								
run5		4/19/2006	12:56:45	13.14	8.1								
run5		4/19/2006	12:57:00	13.09	5.4								
run5		4/19/2006	12:57:15	13.06	3.5								
run5		4/19/2006	12:57:30	13.10	3.2								
run5		4/19/2006	12:57:45	13.04	4.2								
run5		4/19/2006	12:58:00	13.12	4.5								
run5		4/19/2006	12:58:15	13.12	5.1								
run5		4/19/2006	12:58:30	13.16	6.3								
run5		4/19/2006	12:58:45	13.16	13.1								
run5		4/19/2006	12:59:00	13.15	16.1								
run5		4/19/2006	12:59:15	13.20	11.4								
run5		4/19/2006	12:59:30	13.13	6.4								
run5		4/19/2006	12:59:45	13.13	4.5								
run5		4/19/2006	13:00:00	13.06	4.2								
run5		4/19/2006	13:00:15	13.14	3.9								
run5		4/19/2006	13:00:30	13.11	4.8								
run5		4/19/2006	13:00:45	13.09	6.8								
run5		4/19/2006	13:01:00	13.17	8.4								
run5		4/19/2006	13:01:15	13.11	10.9								
run5		4/19/2006	13:01:30	13.09	10.1								
run5		4/19/2006	13:01:45	13.10	6.8								
run5		4/19/2006	13:02:00	13.17	7.4								
run5		4/19/2006	13:02:15	13.11	7.4								
run5		4/19/2006	13:02:30	13.07	4.8								
run5		4/19/2006	13:02:45	13.00	3.5								
run5		4/19/2006	13:03:00	13.13	3.5								
run5		4/19/2006	13:03:15	13.22	4.8								
run5		4/19/2006	13:03:30	13.06	5.1								
run5		4/19/2006	13:03:45	13.08	5.1								
run5		4/19/2006	13:04:00	13.05	5.5								
run5		4/19/2006	13:04:15	13.13	5.8								
run5		4/19/2006	13:04:30	13.17	5.8								
run5		4/19/2006	13:04:45	13.15	4.5								
run5		4/19/2006	13:05:00	13.12	3.8								
run5		4/19/2006	13:05:15	13.05	3.1								
run5		4/19/2006	13:05:30	13.16	5.5								
run5		4/19/2006	13:05:45	13.14	6.1								
run5		4/19/2006	13:06:00	13.12	6.1								
run5		4/19/2006	13:06:15	13.07	6.8								

filename		4/19/2006 7:51:00		
testby1	C.E.M. Solutions, Inc.			
testby2	7990 W. Gulf to Lake Hwy.			
testby3	Crystal River, FL 34429			
testby4	Ph: 352-564-0441			
testfor1	Progress Energy Florida			
testfor2	Crystal River			
testfor3	Unit 5			
testfor4	PL 75 High Load Gas and Flow RATA			
name			5 CO2	5 CO
sn			01415D/3379	48C-74094-375
offset			0	0
fullscale			20	1000
train			1	1
gastype			co2 3a	co 10
run5	4/19/2006	13:06:30	13.04	6.1
run5	4/19/2006	13:06:45	13.18	6.5
run5	4/19/2006	13:07:00	13.19	6.8
run5	4/19/2006	13:07:15	13.19	5.5
run5	4/19/2006	13:07:30	13.16	4.5
run5	4/19/2006	13:07:45	13.12	6.5
run5	4/19/2006	13:08:00	13.10	5.5
run5	4/19/2006	13:08:15	13.16	4.5
run5	4/19/2006	13:08:30	13.13	3.2
run5	4/19/2006	13:08:45	13.12	3.2
run5	4/19/2006	13:09:00	13.08	2.8
run5	4/19/2006	13:09:15	13.10	2.8
run5	4/19/2006	13:09:30	13.21	3.0
run5	4/19/2006	13:09:45	13.13	2.4
run5	4/19/2006	13:10:00	13.13	2.0
run5	4/19/2006	13:10:15	13.05	2.1
run5	4/19/2006	13:10:30	13.06	1.8
run5	4/19/2006	13:10:45	13.18	2.8
run5	4/19/2006	13:11:00	13.12	4.2
run5	4/19/2006	13:11:15	13.15	3.4
run5	4/19/2006	13:11:30	13.05	1.8
run5	4/19/2006	13:11:45	13.11	1.9
run5	4/19/2006	13:12:00	13.21	4.9
run5	4/19/2006	13:12:15	13.23	10.7
run5	4/19/2006	13:12:30	13.19	13.1
run5	4/19/2006	13:12:45	13.11	12.3
run5	4/19/2006	13:13:00	13.11	9.3
run5	4/19/2006	13:13:15	13.17	7.4
run5	4/19/2006	13:13:30	13.25	7.1
run5	4/19/2006	13:13:45	13.23	9.2
run5	4/19/2006	13:14:00	13.18	13.2
run5	4/19/2006	13:14:15	13.10	10.3
run5	4/19/2006	13:14:30	13.13	4.6
run5	4/19/2006	13:14:45	13.21	4.7
run5	4/19/2006	13:15:00	13.14	7.1
run5	4/19/2006	13:15:15	13.17	6.4
run5	4/19/2006	13:15:30	13.06	4.7
run5	4/19/2006	13:15:45	13.16	4.3
run5	4/19/2006	13:16:00	13.18	6.9
run5	4/19/2006	13:16:15	13.17	8.1
run5	4/19/2006	13:16:30	13.16	6.7
run5	4/19/2006	13:16:45	13.07	5.4
run5	4/19/2006	13:17:00	13.17	4.9
run5	4/19/2006	13:17:15	13.19	5.8
run5	4/19/2006	13:17:30	13.21	8.8
run5	4/19/2006	13:17:45	13.16	7.5
run5	4/19/2006	13:18:00	13.05	4.2
run5	4/19/2006	13:18:15	13.15	5.0
run5	4/19/2006	13:18:30	13.19	7.5
run5	4/19/2006	13:18:45	13.10	7.2
run5	4/19/2006	13:19:00	13.05	4.8
run5	4/19/2006	13:19:15	13.04	3.4
run5	4/19/2006	13:19:30	13.10	3.1
run5	4/19/2006	13:19:45	13.26	4.6
run5	4/19/2006	13:20:00	13.15	5.1
run5	4/19/2006	13:20:15	13.08	5.1
run5	4/19/2006	13:20:30	13.09	5.5
run5	4/19/2006	13:20:45	13.10	6.1
run5	4/19/2006	13:21:00	13.18	5.8
run5	4/19/2006	13:21:15	13.07	5.1
run5	4/19/2006	13:21:30	13.07	4.2
run5	4/19/2006	13:21:45	13.08	4.2
run5	4/19/2006	13:22:00	13.05	3.7
run5	4/19/2006	13:22:15	13.15	3.6
run5	4/19/2006	13:22:30	13.14	4.2
run5	4/19/2006	13:22:45	13.18	4.9
run5	4/19/2006	13:23:00	13.10	4.5
averun5	4/19/2006	13:01:00	13.13	5.7
scg4	4/19/2006	13:23:15	13.11	3.2
scg4	4/19/2006	13:23:30	13.17	3.2
scg4	4/19/2006	13:23:45	13.20	4.0
scg4	4/19/2006	13:24:00	13.17	5.1
scg4	4/19/2006	13:24:15	13.09	5.8
scg4	4/19/2006	13:24:30	13.09	4.4

21					
CC150094/cg4	NOx	243 SO2	448	0	0
CC150094/cg4	NOx	243 SO2	448	0	0
CC150094/cg4	NOx	243 SO2	448	0	0
CC150094/cg4	NOx	243 SO2	448	0	0
CC150094/cg4	NOx	243 SO2	448	0	0
CC150094/cg4	NOx	243 SO2	448	0	0

```
filename                            4/19/2006   7:51:00
testby1     C.E.M. Solutions, Inc.
testby2     7990 W. Gulf to Lake Hwy.
testby3     Crystal River, FL  34429
testby4     Ph: 352-564-0441
testfor1    Progress Energy Florida
testfor2    Crystal River
testfor3    Unit 5
testfor4    Pt. 75 High Load Gas and Flow RATA
name                                                     5 CO2        5 CO
sn                                                       01415D/3379  48C-74094-375
offset                                                             0            0
fullscale                                                         20         1000
train                                                              1            1
gastype                                                  co2 3a       co 10
scg4        4/19/2006  13:24:45    12.84     3.3     CC150094/cg4  NOx   243 SO2   448     0     0
scg4        4/19/2006  13:25:00     4.25     2.1     CC150094/cg4  NOx   243 SO2   448     0     0
scg4        4/19/2006  13:25:15     7.73     2.1     CC150094/cg4  NOx   243 SO2   448     0     0
scg4        4/19/2006  13:25:30     8.61     2.1     CC150094/cg4  NOx   243 SO2   448     0     0
scg4        4/19/2006  13:25:45     8.63     2.1     CC150094/cg4  NOx   243 SO2   448     0     0
scg4        4/19/2006  13:26:00     8.64     2.1     CC150094/cg4  NOx   243 SO2   448     0     0
scg4        4/19/2006  13:26:15     8.64     1.0     CC150094/cg4  NOx   243 SO2   448     0     0
scg4        4/19/2006  13:26:30     8.65     2.1     CC150094/cg4  NOx   243 SO2   448     0     0
scg4        4/19/2006  13:26:45     8.64     2.1     CC150094/cg4  NOx   243 SO2   448     0     0
scg4        4/19/2006  13:27:00     8.64     1.9     CC150094/cg4  NOx   243 SO2   448     0     0
scg4        4/19/2006  13:27:15     8.64     1.9     CC150094/cg4  NOx   243 SO2   448     0     0
scg4        4/19/2006  13:27:30     8.65     1.0     CC150094/cg4  NOx   243 SO2   448     0     0
scg4        4/19/2006  13:27:45     8.65     1.5     CC150094/cg4  NOx   243 SO2   448     0     0
scg4        4/19/2006  13:28:00     8.64     1.7     CC150094/cg4  NOx   243 SO2   448     0     0
scg4        4/19/2006  13:28:15     8.65     1.9     CC150094/cg4  NOx   243 SO2   448     0     0
scg4        4/19/2006  13:28:30     8.65     2.2     CC150094/cg4  NOx   243 SO2   448     0     0
noxspan1    4/19/2006  13:28:30     8.65     2.2     CC150094/cg4  NOx   243 SO2   448     0     0
so2span1    4/19/2006  13:28:30     8.65     2.2     CC150094/cg4  NOx   243 SO2   448     0     0
scg6        4/19/2006  13:28:45     8.65     2.1     CC183009/cg6  CO    293         0     0     0
scg6        4/19/2006  13:29:00     8.64     2.1     CC183009/cg6  CO    293         0     0     0
scg6        4/19/2006  13:29:15     8.64     1.8     CC183009/cg6  CO    293         0     0     0
scg6        4/19/2006  13:29:30     8.64     1.0     CC183009/cg6  CO    293         0     0     0
scg6        4/19/2006  13:29:45     8.64     1.8     CC183009/cg6  CO    293         0     0     0
scg6        4/19/2006  13:30:00     8.64     2.1     CC183009/cg6  CO    293         0     0     0
scg6        4/19/2006  13:30:15     8.64     1.8     CC183009/cg6  CO    293         0     0     0
scg6        4/19/2006  13:30:30     7.44    10.1     CC183009/cg6  CO    293         0     0     0
scg6        4/19/2006  13:30:45     1.00    93.1     CC183009/cg6  CO    293         0     0     0
scg6        4/19/2006  13:31:00     0.27   222.0     CC183009/cg6  CO    293         0     0     0
scg6        4/19/2006  13:31:15     0.20   277.3     CC183009/cg6  CO    293         0     0     0
scg6        4/19/2006  13:31:30     0.17   287.9     CC183009/cg6  CO    293         0     0     0
scg6        4/19/2006  13:31:45     0.15   289.0     CC183009/cg6  CO    293         0     0     0
scg6        4/19/2006  13:32:00     0.14   288.7     CC183009/cg6  CO    293         0     0     0
cospan1     4/19/2006  13:32:00     0.14   288.7     CC183009/cg6  CO    293         0     0     0
scg2        4/19/2006  13:32:15     0.12   288.3     CC89066/cg2   O2   12.9 CO2   10.9     0     0
scg2        4/19/2006  13:32:30     0.12   287.7     CC89066/cg2   O2   12.9 CO2   10.9     0     0
scg2        4/19/2006  13:32:45     0.11   288.5     CC89066/cg2   O2   12.9 CO2   10.9     0     0
scg2        4/19/2006  13:33:00     0.11   288.8     CC89066/cg2   O2   12.9 CO2   10.9     0     0
scg2        4/19/2006  13:33:15     0.10   290.1     CC89066/cg2   O2   12.9 CO2   10.9     0     0
scg2        4/19/2006  13:33:30     0.10   288.7     CC89066/cg2   O2   12.9 CO2   10.9     0     0
scg2        4/19/2006  13:33:45     0.09   289.1     CC89066/cg2   O2   12.9 CO2   10.9     0     0
scg2        4/19/2006  13:34:00     1.10   275.2     CC89066/cg2   O2   12.9 CO2   10.9     0     0
scg2        4/19/2006  13:34:15     9.39   170.2     CC89066/cg2   O2   12.9 CO2   10.9     0     0
scg2        4/19/2006  13:34:30    10.70    51.9     CC89066/cg2   O2   12.9 CO2   10.9     0     0
scg2        4/19/2006  13:34:45    10.77    11.4     CC89066/cg2   O2   12.9 CO2   10.9     0     0
scg2        4/19/2006  13:35:00    10.81     0.3     CC89066/cg2   O2   12.9 CO2   10.9     0     0
co2span1    4/19/2006  13:35:00    10.81     0.3     CC89066/cg2   O2   12.9 CO2   10.9     0     0
o2span1     4/19/2006  13:35:00    10.81     0.3     CC89066/cg2   O2   12.9 CO2   10.9     0     0
scg1        4/19/2006  13:35:15    10.83     0.0     CC 81224/cg1  CO2     0 NOx      0 SO2   0 O2   0
scg1        4/19/2006  13:35:30    10.84     0.0     CC 81224/cg1  CO2     0 NOx      0 SO2   0 O2   0
scg1        4/19/2006  13:35:45    10.85     0.0     CC 81224/cg1  CO2     0 NOx      0 SO2   0 O2   0
scg1        4/19/2006  13:36:00    10.86     0.0     CC 81224/cg1  CO2     0 NOx      0 SO2   0 O2   0
scg1        4/19/2006  13:36:15    10.86    -0.2     CC 81224/cg1  CO2     0 NOx      0 SO2   0 O2   0
scg1        4/19/2006  13:36:30    10.88    -0.2     CC 81224/cg1  CO2     0 NOx      0 SO2   0 O2   0
scg1        4/19/2006  13:36:45    10.87     0.0     CC 81224/cg1  CO2     0 NOx      0 SO2   0 O2   0
scg1        4/19/2006  13:37:00     8.61    -0.2     CC 81224/cg1  CO2     0 NOx      0 SO2   0 O2   0
scg1        4/19/2006  13:37:15     0.85    -0.2     CC 81224/cg1  CO2     0 NOx      0 SO2   0 O2   0
scg1        4/19/2006  13:37:30     0.26     0.0     CC 81224/cg1  CO2     0 NOx      0 SO2   0 O2   0
scg1        4/19/2006  13:37:45     0.19     0.0     CC 81224/cg1  CO2     0 NOx      0 SO2   0 O2   0
co2zero1    4/19/2006  13:37:45     0.19     0.0     CC 81224/cg1  CO2     0 NOx      0 SO2   0 O2   0
o2zero1     4/19/2006  13:37:30     0.26     0.0     CC 81224/cg1  CO2     0 NOx      0 SO2   0 O2   0
noxzero1    4/19/2006  13:36:45    10.87     0.0     CC 81224/cg1  CO2     0 NOx      0 SO2   0 O2   0
so2zero1    4/19/2006  13:36:45    10.87     0.0     CC 81224/cg1  CO2     0 NOx      0 SO2   0 O2   0
cozero1     4/19/2006  13:36:30    10.88    -0.2     CC 81224/cg1  CO2     0 NOx      0 SO2   0 O2   0
run6l       4/19/2006  13:38:30     0.13     0.0
run6l       4/19/2006  13:38:45     0.12     0.0
run6l       4/19/2006  13:39:00     0.11    -0.2
run6l       4/19/2006  13:39:15     0.11     0.0
run6l       4/19/2006  13:39:30     0.10     0.0
run6l       4/19/2006  13:39:45     2.18     0.0
run6l       4/19/2006  13:40:00    10.65     0.4
run6        4/19/2006  13:40:15    12.64     2.8
run6        4/19/2006  13:40:30    12.86     3.7
run6        4/19/2006  13:40:45    12.91     3.1
run6        4/19/2006  13:41:00    12.96     3.1
```

filename		4/19/2006	7:51:00		
testby1	C.E.M. Solutions, Inc.				
testby2	7990 W. Gulf to Lake Hwy.				
testby3	Crystal River, FL 34429				
testby4	Ph: 352-564-0441				
testfor1	Progress Energy Florida				
testfor2	Crystal River				
testfor3	Unit 5				
testfor4	Pt. 75 High Load Gas and Flow RATA				
name				5 CO2	5 CO
sn				01415D/3379	48C-74094-375
offset				0	0
fullscale				20	1000
train				1	1
gastype				co2 3a	co 10
run6		4/19/2006	13:41:15	12.95	3.1
run6		4/19/2006	13:41:30	13.01	3.2
run6		4/19/2006	13:41:45	13.01	3.2
run6		4/19/2006	13:42:00	12.94	3.2
run6		4/19/2006	13:42:15	12.92	2.4
run6		4/19/2006	13:42:30	12.93	3.1
run6		4/19/2006	13:42:45	13.03	3.0
run6		4/19/2006	13:43:00	12.98	2.1
run6		4/19/2006	13:43:15	12.95	2.1
run6		4/19/2006	13:43:30	12.98	1.9
run6		4/19/2006	13:43:45	12.99	3.7
run6		4/19/2006	13:44:00	13.09	5.1
run6		4/19/2006	13:44:15	13.02	6.9
run6		4/19/2006	13:44:30	12.98	6.2
run6		4/19/2006	13:44:45	12.93	3.4
run6		4/19/2006	13:45:00	12.95	2.0
run6		4/19/2006	13:45:15	13.03	3.0
run6		4/19/2006	13:45:30	13.02	5.1
run6		4/19/2006	13:45:45	13.06	4.4
run6		4/19/2006	13:46:00	13.01	3.7
run6		4/19/2006	13:46:15	13.02	3.0
run6		4/19/2006	13:46:30	13.07	2.1
run6		4/19/2006	13:46:45	13.08	2.1
run6		4/19/2006	13:47:00	12.99	2.6
run6		4/19/2006	13:47:15	13.01	3.9
run6		4/19/2006	13:47:30	13.00	4.2
run6		4/19/2006	13:47:45	13.05	4.0
run6		4/19/2006	13:48:00	13.06	3.2
run6		4/19/2006	13:48:15	12.99	2.3
run6		4/19/2006	13:48:30	13.05	4.2
run6		4/19/2006	13:48:45	13.05	5.9
run6		4/19/2006	13:49:00	13.10	5.6
run6		4/19/2006	13:49:15	13.12	4.2
run6		4/19/2006	13:49:30	13.05	2.5
run6		4/19/2006	13:49:45	13.06	3.1
run6		4/19/2006	13:50:00	13.00	4.2
run6		4/19/2006	13:50:15	13.04	3.2
run6		4/19/2006	13:50:30	13.03	2.1
run6		4/19/2006	13:50:45	12.99	2.0
run6		4/19/2006	13:51:00	12.98	3.1
run6		4/19/2006	13:51:15	12.95	3.9
run6		4/19/2006	13:51:30	13.05	3.6
run6		4/19/2006	13:51:45	13.04	2.6
run6		4/19/2006	13:52:00	13.05	2.0
run6		4/19/2006	13:52:15	13.04	2.1
run6		4/19/2006	13:52:30	13.03	2.1
run6		4/19/2006	13:52:45	13.05	2.2
run6		4/19/2006	13:53:00	13.10	3.0
run6		4/19/2006	13:53:15	13.09	4.0
run6		4/19/2006	13:53:30	13.07	4.2
run6		4/19/2006	13:53:45	13.05	4.3
run6		4/19/2006	13:54:00	13.00	5.6
run6		4/19/2006	13:54:15	13.08	5.7
run6		4/19/2006	13:54:30	13.05	4.6
run6		4/19/2006	13:54:45	13.05	4.2
run6		4/19/2006	13:55:00	13.05	4.2
run6		4/19/2006	13:55:15	12.99	3.7
run6		4/19/2006	13:55:30	13.09	3.3
run6		4/19/2006	13:55:45	13.04	4.7
run6		4/19/2006	13:56:00	13.05	4.6
run6		4/19/2006	13:56:15	12.99	4.2
run6		4/19/2006	13:56:30	13.03	4.2
run6		4/19/2006	13:56:45	13.09	4.2
run6		4/19/2006	13:57:00	13.06	4.2
run6		4/19/2006	13:57:15	13.04	3.3
run6		4/19/2006	13:57:30	12.99	2.4
run6		4/19/2006	13:57:45	13.00	1.9
run6		4/19/2006	13:58:00	13.06	2.6
run6		4/19/2006	13:58:15	13.11	3.2
run6		4/19/2006	13:58:30	13.08	2.9
run6		4/19/2006	13:58:45	13.04	4.0
run6		4/19/2006	13:59:00	13.03	3.4
run6		4/19/2006	13:59:15	13.07	3.1
run6		4/19/2006	13:59:30	13.12	3.2

filename		4/19/2006 7:51:00		
testby1	C.E.M. Solutions, Inc.			
testby2	7990 W. Gulf to Lake Hwy.			
testby3	Crystal River, FL 34429			
testby4	Ph: 352-564-0441			
testfor1	Progress Energy Florida			
testfor2	Crystal River			
testfor3	Unit 5			
testfor4	Pt. 75 High Load Gas and Flow RATA			
name			5 CO2	5 CO
sn			01415D/3379	48C-74094-375
offset			0	0
fullscale			20	1000
train			1	1
gastype			co2 3a	co 10
run6		4/19/2006 13:59:45	13.04	4.2
run6		4/19/2006 14:00:00	13.05	4.6
run6		4/19/2006 14:00:15	13.02	4.0
run6		4/19/2006 14:00:30	13.08	3.1
run6		4/19/2006 14:00:45	13.06	3.1
run6		4/19/2006 14:01:00	13.04	3.2
run6		4/19/2006 14:01:15	13.11	4.4
run6		4/19/2006 14:01:30	13.01	6.1
run6		4/19/2006 14:01:45	13.04	5.3
run6		4/19/2006 14:02:00	13.10	5.6
run6		4/19/2006 14:02:15	13.07	5.9
run6		4/19/2006 14:02:30	13.07	4.6
run6		4/19/2006 14:02:45	13.05	3.1
run6		4/19/2006 14:03:00	13.07	3.1
run6		4/19/2006 14:03:15	13.07	4.0
run6		4/19/2006 14:03:30	13.07	4.2
run6		4/19/2006 14:03:45	13.05	4.2
run6		4/19/2006 14:04:00	13.06	4.7
run6		4/19/2006 14:04:15	13.02	4.5
run6		4/19/2006 14:04:30	13.07	4.6
run6		4/19/2006 14:04:45	13.03	4.2
run6		4/19/2006 14:05:00	12.97	3.9
run6		4/19/2006 14:05:15	12.96	4.0
run6		4/19/2006 14:05:30	12.96	2.9
run6		4/19/2006 14:05:45	13.12	4.0
run6		4/19/2006 14:06:00	13.08	4.2
run6		4/19/2006 14:06:15	13.09	2.8
run6		4/19/2006 14:06:30	13.06	2.5
run6		4/19/2006 14:06:45	13.07	2.3
run6		4/19/2006 14:07:00	13.10	3.2
run6		4/19/2006 14:07:15	13.06	4.0
run6		4/19/2006 14:07:30	13.06	3.6
run6		4/19/2006 14:07:45	13.05	2.7
run6		4/19/2006 14:08:00	13.07	1.6
run6		4/19/2006 14:08:15	13.09	2.1
run6		4/19/2006 14:08:30	13.08	2.0
run6		4/19/2006 14:08:45	13.08	2.1
run6		4/19/2006 14:09:00	13.02	1.9
run6		4/19/2006 14:09:15	13.02	2.0
run6		4/19/2006 14:09:30	13.08	2.5
run6		4/19/2006 14:09:45	13.09	3.1
run6		4/19/2006 14:10:00	13.05	3.1
run6		4/19/2006 14:10:15	13.02	3.1
run6		4/19/2006 14:10:30	12.97	3.0
run6		4/19/2006 14:10:45	13.06	2.9
run6		4/19/2006 14:11:00	13.13	2.9
run6		4/19/2006 14:11:15	13.05	3.1
run6		4/19/2006 14:11:30	13.08	2.6
run6		4/19/2006 14:11:45	13.04	2.1
run6		4/19/2006 14:12:00	13.13	2.1
run6		4/19/2006 14:12:15	13.11	3.4
run6		4/19/2006 14:12:30	13.06	5.1
run6		4/19/2006 14:12:45	13.09	5.1
run6		4/19/2006 14:13:00	13.01	5.1
run6		4/19/2006 14:13:15	13.06	6.4
run6		4/19/2006 14:13:30	13.10	8.6
run6		4/19/2006 14:13:45	13.02	6.6
run6		4/19/2006 14:14:00	13.05	4.6
run6		4/19/2006 14:14:15	12.98	4.3
run6		4/19/2006 14:14:30	13.06	9.4
run6		4/19/2006 14:14:45	13.05	12.5
run6		4/19/2006 14:15:00	13.08	8.7
run6		4/19/2006 14:15:15	13.06	5.1
run6		4/19/2006 14:15:30	13.00	4.2
run6		4/19/2006 14:15:45	12.99	3.6
run6		4/19/2006 14:16:00	13.08	4.7
run6		4/19/2006 14:16:15	13.07	4.9
run6		4/19/2006 14:16:30	13.02	3.4
run6		4/19/2006 14:16:45	12.98	2.2
averun6		4/19/2006 13:56:00	13.05	4.0
scg4		4/19/2006 14:17:15	13.06	2.1
scg4		4/19/2006 14:17:30	12.98	2.1
scg4		4/19/2006 14:17:45	12.95	2.1
scg4		4/19/2006 14:18:00	12.93	2.1

21					
CC150094/cg4	NOx	243 SO2	448	0	0
CC150094/cg4	NOx	243 SO2	448	0	0
CC150094/cg4	NOx	243 SO2	448	0	0
CC150094/cg4	NOx	243 SO2	448	0	0

```
filename                            4/19/2006   7:51:00
testby1    C.E.M. Solutions, Inc.
testby2    7990 W. Gulf to Lake Hwy.
testby3    Crystal River, FL  34429
testby4    Ph: 352-564-0441
testfor1   Progress Energy Florida
testfor2   Crystal River
testfor3   Unit 5
testfor4   Pt. 75 High Load Gas and Flow RATA
name                                                   5 CO2         5 CO
sn                                                     01415D/3379   48C-74094-375
offset                                                           0               0
fullscale                                                       20            1000
train                                                            1               1
gastype                                                co2 3a        co 10
scg4                                4/19/2006  14:18:15      12.99             2.1    CC150094/cg4  NOx    243 SO2   448     0     0
scg4                                4/19/2006  14:18:30      13.09             3.6    CC150094/cg4  NOx    243 SO2   448     0     0
scg4                                4/19/2006  14:18:45       8.97             4.8    CC150094/cg4  NOx    243 SO2   448     0     0
scg4                                4/19/2006  14:19:00       4.87             4.2    CC150094/cg4  NOx    243 SO2   448     0     0
scg4                                4/19/2006  14:19:15       8.50             3.0    CC150094/cg4  NOx    243 SO2   448     0     0
scg4                                4/19/2006  14:19:30       8.62             2.1    CC150094/cg4  NOx    243 SO2   448     0     0
scg4                                4/19/2006  14:19:45       8.63             1.6    CC150094/cg4  NOx    243 SO2   448     0     0
scg4                                4/19/2006  14:20:00       8.63             1.9    CC150094/cg4  NOx    243 SO2   448     0     0
scg4                                4/19/2006  14:20:15       8.64             2.0    CC150094/cg4  NOx    243 SO2   448     0     0
scg4                                4/19/2006  14:20:30       8.63             2.1    CC150094/cg4  NOx    243 SO2   448     0     0
noxspan1                            4/19/2006  14:20:30       8.63             2.1    CC150094/cg4  NOx    243 SO2   448     0     0
so2span1                            4/19/2006  14:20:30       8.63             2.1    CC150094/cg4  NOx    243 SO2   448     0     0
scg6                                4/19/2006  14:20:45       8.63             1.9    CC183009/cg6  CO     293         0     0     0
scg6                                4/19/2006  14:21:00       8.64             2.1    CC183009/cg6  CO     293         0     0     0
scg6                                4/19/2006  14:21:15       8.64             1.6    CC183009/cg6  CO     293         0     0     0
scg6                                4/19/2006  14:21:30       8.64             2.1    CC183009/cg6  CO     293         0     0     0
scg6                                4/19/2006  14:21:45       8.64             2.1    CC183009/cg6  CO     293         0     0     0
scg6                                4/19/2006  14:22:00       8.64             1.9    CC183009/cg6  CO     293         0     0     0
scg6                                4/19/2006  14:22:15       8.64             2.1    CC183009/cg6  CO     293         0     0     0
scg6                                4/19/2006  14:22:30       7.84             5.6    CC183009/cg6  CO     293         0     0     0
scg6                                4/19/2006  14:22:45       1.24            91.2    CC183009/cg6  CO     293         0     0     0
scg6                                4/19/2006  14:23:00       0.27           215.9    CC183009/cg6  CO     293         0     0     0
scg6                                4/19/2006  14:23:15       0.20           276.7    CC183009/cg6  CO     293         0     0     0
scg6                                4/19/2006  14:23:30       0.17           287.6    CC183009/cg6  CO     293         0     0     0
scg6                                4/19/2006  14:23:45       0.15           289.8    CC183009/cg6  CO     293         0     0     0
cospan1                             4/19/2006  14:23:45       0.15           289.8    CC183009/cg6  CO     293         0     0     0
scg2                                4/19/2006  14:24:00       0.14           289.4    CC89066/cg2   O2    12.9 CO2  10.9     0     0
scg2                                4/19/2006  14:24:15       0.13           288.7    CC89066/cg2   O2    12.9 CO2  10.9     0     0
scg2                                4/19/2006  14:24:30       0.12           289.1    CC89066/cg2   O2    12.9 CO2  10.9     0     0
scg2                                4/19/2006  14:24:45       0.11           289.4    CC89066/cg2   O2    12.9 CO2  10.9     0     0
scg2                                4/19/2006  14:25:00       0.10           289.1    CC89066/cg2   O2    12.9 CO2  10.9     0     0
scg2                                4/19/2006  14:25:15       0.10           289.6    CC89066/cg2   O2    12.9 CO2  10.9     0     0
scg2                                4/19/2006  14:25:30       0.10           289.8    CC89066/cg2   O2    12.9 CO2  10.9     0     0
scg2                                4/19/2006  14:25:45       4.56           239.6    CC89066/cg2   O2    12.9 CO2  10.9     0     0
scg2                                4/19/2006  14:26:00      10.45           112.8    CC89066/cg2   O2    12.9 CO2  10.9     0     0
scg2                                4/19/2006  14:26:15      10.73            26.8    CC89066/cg2   O2    12.9 CO2  10.9     0     0
scg2                                4/19/2006  14:26:30      10.78             3.8    CC89066/cg2   O2    12.9 CO2  10.9     0     0
co2span1                            4/19/2006  14:26:30      10.78             3.8    CC89066/cg2   O2    12.9 CO2  10.9     0     0
o2span1                             4/19/2006  14:26:30      10.78             3.8    CC89066/cg2   O2    12.9 CO2  10.9     0     0
scg1                                4/19/2006  14:26:45      10.81             0.1    CC 81224/cg1  CO2      0 NOx     0 SO2 0 O2  0
scg1                                4/19/2006  14:27:00      10.83             0.0    CC 81224/cg1  CO2      0 NOx     0 SO2 0 O2  0
scg1                                4/19/2006  14:27:15      10.85             0.0    CC 81224/cg1  CO2      0 NOx     0 SO2 0 O2  0
scg1                                4/19/2006  14:27:30      10.85             0.0    CC 81224/cg1  CO2      0 NOx     0 SO2 0 O2  0
scg1                                4/19/2006  14:27:45      10.86             0.0    CC 81224/cg1  CO2      0 NOx     0 SO2 0 O2  0
scg1                                4/19/2006  14:28:00      10.86             0.0    CC 81224/cg1  CO2      0 NOx     0 SO2 0 O2  0
scg1                                4/19/2006  14:28:15      10.87             0.0    CC 81224/cg1  CO2      0 NOx     0 SO2 0 O2  0
scg1                                4/19/2006  14:28:30       9.78             0.0    CC 81224/cg1  CO2      0 NOx     0 SO2 0 O2  0
scg1                                4/19/2006  14:28:45       1.42             0.0    CC 81224/cg1  CO2      0 NOx     0 SO2 0 O2  0
scg1                                4/19/2006  14:29:00       0.28             0.0    CC 81224/cg1  CO2      0 NOx     0 SO2 0 O2  0
scg1                                4/19/2006  14:29:15       0.21             0.0    CC 81224/cg1  CO2      0 NOx     0 SO2 0 O2  0
scg1                                4/19/2006  14:29:30       0.17             0.0    CC 81224/cg1  CO2      0 NOx     0 SO2 0 O2  0
scg1                                4/19/2006  14:29:45       0.15             0.0    CC 81224/cg1  CO2      0 NOx     0 SO2 0 O2  0
co2zero1                            4/19/2006  14:29:45       0.15             0.0    CC 81224/cg1  CO2      0 NOx     0 SO2 0 O2  0
o2zero1                             4/19/2006  14:29:45       0.15             0.0    CC 81224/cg1  CO2      0 NOx     0 SO2 0 O2  0
noxzero1                            4/19/2006  14:29:45       0.15             0.0    CC 81224/cg1  CO2      0 NOx     0 SO2 0 O2  0
so2zero1                            4/19/2006  14:29:30       0.17             0.0    CC 81224/cg1  CO2      0 NOx     0 SO2 0 O2  0
cozero1                             4/19/2006  14:29:45       0.15             0.0    CC 81224/cg1  CO2      0 NOx     0 SO2 0 O2  0
run7l                               4/19/2006  14:31:15       0.10             0.0
run7l                               4/19/2006  14:31:30       0.09             0.0
run7l                               4/19/2006  14:31:45       0.10             0.0
run7l                               4/19/2006  14:32:00       5.29             0.6
run7                                4/19/2006  14:32:15      11.74             2.3
run7                                4/19/2006  14:32:30      12.73             3.8
run7                                4/19/2006  14:32:45      12.93             3.9
run7                                4/19/2006  14:33:00      12.86             3.2
run7                                4/19/2006  14:33:15      12.86             1.8
run7                                4/19/2006  14:33:30      12.85             2.8
run7                                4/19/2006  14:33:45      12.89             3.0
run7                                4/19/2006  14:34:00      12.92             2.8
run7                                4/19/2006  14:34:15      12.86             2.9
run7                                4/19/2006  14:34:30      12.93             2.9
run7                                4/19/2006  14:34:45      12.88             2.1
run7                                4/19/2006  14:35:00      12.99             1.7
run7                                4/19/2006  14:35:15      13.01             3.4
```

filename		4/19/2006 7:51:00		
testby1	C.E.M. Solutions, Inc.			
testby2	7990 W. Gulf to Lake Hwy.			
testby3	Crystal River, FL 34429			
testby4	Ph: 352-564-0441			
testfor1	Progress Energy Florida			
testfor2	Crystal River			
testfor3	Unit 5			
testfor4	PL 75 High Load Gas and Flow RATA			
name			5 CO2	5 CO
sn			01415D/3379	48C-74094-375
offset			0	0
fullscale			20	1000
train			1	1
gastype			co2 3a	co 10
run7	4/19/2006	14:35:30	12.98	4.7
run7	4/19/2006	14:35:45	12.96	4.8
run7	4/19/2006	14:36:00	12.94	3.4
run7	4/19/2006	14:36:15	13.01	2.2
run7	4/19/2006	14:36:30	13.03	1.9
run7	4/19/2006	14:36:45	12.95	1.9
run7	4/19/2006	14:37:00	12.96	1.8
run7	4/19/2006	14:37:15	12.93	2.2
run7	4/19/2006	14:37:30	13.00	2.6
run7	4/19/2006	14:37:45	13.01	3.1
run7	4/19/2006	14:38:00	12.96	3.8
run7	4/19/2006	14:38:15	12.94	3.9
run7	4/19/2006	14:38:30	13.01	3.2
run7	4/19/2006	14:38:45	12.99	2.4
run7	4/19/2006	14:39:00	12.99	3.0
run7	4/19/2006	14:39:15	12.94	2.8
run7	4/19/2006	14:39:30	12.93	2.1
run7	4/19/2006	14:39:45	12.96	2.7
run7	4/19/2006	14:40:00	12.96	2.9
run7	4/19/2006	14:40:15	13.06	2.7
run7	4/19/2006	14:40:30	12.97	4.5
run7	4/19/2006	14:40:45	12.99	4.9
run7	4/19/2006	14:41:00	12.98	4.8
run7	4/19/2006	14:41:15	12.95	4.8
run7	4/19/2006	14:41:30	13.00	3.9
run7	4/19/2006	14:41:45	12.99	3.2
run7	4/19/2006	14:42:00	12.97	3.2
run7	4/19/2006	14:42:15	12.95	2.0
run7	4/19/2006	14:42:30	12.96	3.4
run7	4/19/2006	14:42:45	13.01	7.2
run7	4/19/2006	14:43:00	13.03	7.1
run7	4/19/2006	14:43:15	12.97	6.8
run7	4/19/2006	14:43:30	12.92	6.1
run7	4/19/2006	14:43:45	12.89	3.8
run7	4/19/2006	14:44:00	12.93	2.7
run7	4/19/2006	14:44:15	13.02	2.9
run7	4/19/2006	14:44:30	12.96	3.1
run7	4/19/2006	14:44:45	12.97	2.0
run7	4/19/2006	14:45:00	12.93	2.1
run7	4/19/2006	14:45:15	12.94	2.0
run7	4/19/2006	14:45:30	13.02	2.7
run7	4/19/2006	14:45:45	13.01	7.4
run7	4/19/2006	14:46:00	13.01	7.4
run7	4/19/2006	14:46:15	12.96	5.8
run7	4/19/2006	14:46:30	13.01	5.1
run7	4/19/2006	14:46:45	13.08	7.1
run7	4/19/2006	14:47:00	13.01	9.5
run7	4/19/2006	14:47:15	12.96	7.9
run7	4/19/2006	14:47:30	12.92	4.6
run7	4/19/2006	14:47:45	13.00	3.5
run7	4/19/2006	14:48:00	13.07	5.5
run7	4/19/2006	14:48:15	13.07	7.1
run7	4/19/2006	14:48:30	13.03	5.8
run7	4/19/2006	14:48:45	12.94	2.6
run7	4/19/2006	14:49:00	12.96	2.8
run7	4/19/2006	14:49:15	13.00	3.8
run7	4/19/2006	14:49:30	12.96	3.2
run7	4/19/2006	14:49:45	12.95	2.1
run7	4/19/2006	14:50:00	12.90	1.8
run7	4/19/2006	14:50:15	12.92	3.8
run7	4/19/2006	14:50:30	13.04	5.8
run7	4/19/2006	14:50:45	12.97	6.8
run7	4/19/2006	14:51:00	12.95	5.5
run7	4/19/2006	14:51:15	12.96	4.2
run7	4/19/2006	14:51:30	12.96	3.9
run7	4/19/2006	14:51:45	13.00	3.9
run7	4/19/2006	14:52:00	12.96	3.4
run7	4/19/2006	14:52:15	12.93	2.8
run7	4/19/2006	14:52:30	12.88	1.9
run7	4/19/2006	14:52:45	12.89	1.8
run7	4/19/2006	14:53:00	12.98	2.1
run7	4/19/2006	14:53:15	12.92	1.9
run7	4/19/2006	14:53:30	12.93	2.1
run7	4/19/2006	14:53:45	12.92	1.9

filename	4/19/2006	7:51:00		
testby1	C.E.M. Solutions, Inc.			
testby2	7990 W. Gulf to Lake Hwy.			
testby3	Crystal River, FL 34429			
testby4	Ph: 352-564-0441			
testfor1	Progress Energy Florida			
testfor2	Crystal River			
testfor3	Unit 5			
testfor4	Pt. 75 High Load Gas and Flow RATA			
name			5 CO2	5 CO
sn			01415D/3379	48C-74094-375
offset			0	0
fullscale			20	1000
train			1	1
gastype			co2 3a	co 10
run7	4/19/2006	14:54:00	13.01	2.6
run7	4/19/2006	14:54:15	13.04	3.0
run7	4/19/2006	14:54:30	12.96	2.7
run7	4/19/2006	14:54:45	12.94	3.9
run7	4/19/2006	14:55:00	12.96	4.2
run7	4/19/2006	14:55:15	12.96	4.2
run7	4/19/2006	14:55:30	13.02	4.6
run7	4/19/2006	14:55:45	12.98	4.7
run7	4/19/2006	14:56:00	12.91	3.4
run7	4/19/2006	14:56:15	12.97	3.1
run7	4/19/2006	14:56:30	12.96	3.9
run7	4/19/2006	14:56:45	12.97	4.8
run7	4/19/2006	14:57:00	13.00	3.9
run7	4/19/2006	14:57:15	12.90	7.1
run7	4/19/2006	14:57:30	12.97	9.0
run7	4/19/2006	14:57:45	12.93	7.8
run7	4/19/2006	14:58:00	12.96	7.4
run7	4/19/2006	14:58:15	12.98	5.5
run7	4/19/2006	14:58:30	12.90	3.1
run7	4/19/2006	14:58:45	12.91	2.0
run7	4/19/2006	14:59:00	12.89	1.7
run7	4/19/2006	14:59:15	12.97	2.1
run7	4/19/2006	14:59:30	12.98	1.8
run7	4/19/2006	14:59:45	12.97	2.1
run7	4/19/2006	15:00:00	12.87	2.0
run7	4/19/2006	15:00:15	12.88	2.1
run7	4/19/2006	15:00:30	12.98	2.4
run7	4/19/2006	15:00:45	13.12	4.5
run7	4/19/2006	15:01:00	13.06	5.1
run7	4/19/2006	15:01:15	12.94	3.8
run7	4/19/2006	15:01:30	12.89	2.4
run7	4/19/2006	15:01:45	12.85	2.1
run7	4/19/2006	15:02:00	12.99	2.0
run7	4/19/2006	15:02:15	12.94	1.9
run7	4/19/2006	15:02:30	12.96	2.1
run7	4/19/2006	15:02:45	12.95	1.9
run7	4/19/2006	15:03:00	12.93	2.1
run7	4/19/2006	15:03:15	13.03	2.9
run7	4/19/2006	15:03:30	12.95	3.1
run7	4/19/2006	15:03:45	12.94	2.6
run7	4/19/2006	15:04:00	12.90	3.1
run7	4/19/2006	15:04:15	12.87	2.5
run7	4/19/2006	15:04:30	12.92	2.1
run7	4/19/2006	15:04:45	12.94	2.1
run7	4/19/2006	15:05:00	12.90	1.9
run7	4/19/2006	15:05:15	12.91	1.8
run7	4/19/2006	15:05:30	12.92	2.1
run7	4/19/2006	15:05:45	12.94	2.0
averun7	4/19/2006	14:44:00	12.96	3.7
scg4	4/19/2006	15:06:15	13.00	3.5
scg4	4/19/2006	15:06:30	12.97	3.9
scg4	4/19/2006	15:06:45	12.90	2.8
scg4	4/19/2006	15:07:00	12.95	2.1
scg4	4/19/2006	15:07:15	12.97	1.9
scg4	4/19/2006	15:07:30	12.97	1.9
scg4	4/19/2006	15:07:45	8.62	2.1
scg4	4/19/2006	15:08:00	5.10	2.1
scg4	4/19/2006	15:08:15	8.52	2.1
scg4	4/19/2006	15:08:30	8.62	2.1
scg4	4/19/2006	15:08:45	8.63	1.9
scg4	4/19/2006	15:09:00	8.63	2.1
noxspan1	4/19/2006	15:09:00	8.63	2.1
so2span1	4/19/2006	15:09:00	8.63	2.1
scg6	4/19/2006	15:09:15	8.64	2.1
scg6	4/19/2006	15:09:30	8.64	2.1
scg6	4/19/2006	15:09:45	8.64	2.0
scg6	4/19/2006	15:10:00	8.64	1.9
scg6	4/19/2006	15:10:15	8.64	2.1
scg6	4/19/2006	15:10:30	8.64	1.8
scg6	4/19/2006	15:10:45	8.64	2.1
scg6	4/19/2006	15:11:00	8.55	4.3
scg6	4/19/2006	15:11:15	2.61	59.2
scg6	4/19/2006	15:11:30	0.32	179.6
scg6	4/19/2006	15:11:45	0.21	266.5

		21				
CC150094/cg4	NOx	243	SO2	448	0	0
CC150094/cg4	NOx	243	SO2	448	0	0
CC150094/cg4	NOx	243	SO2	448	0	0
CC150094/cg4	NOx	243	SO2	448	0	0
CC150094/cg4	NOx	243	SO2	448	0	0
CC150094/cg4	NOx	243	SO2	448	0	0
CC150094/cg4	NOx	243	SO2	448	0	0
CC150094/cg4	NOx	243	SO2	448	0	0
CC150094/cg4	NOx	243	SO2	448	0	0
CC150094/cg4	NOx	243	SO2	448	0	0
CC150094/cg4	NOx	243	SO2	448	0	0
CC150094/cg4	NOx	243	SO2	448	0	0
CC150094/cg4	NOx	243	SO2	448	0	0
CC150094/cg4	NOx	243	SO2	448	0	0
CC183009/cg6	CO	293		0	0	0
CC183009/cg6	CO	293		0	0	0
CC183009/cg6	CO	293		0	0	0
CC183009/cg6	CO	293		0	0	0
CC183009/cg6	CO	293		0	0	0
CC183009/cg6	CO	293		0	0	0
CC183009/cg6	CO	293		0	0	0
CC183009/cg6	CO	293		0	0	0
CC183009/cg6	CO	293		0	0	0
CC183009/cg6	CO	293		0	0	0
CC183009/cg6	CO	293		0	0	0

filename		4/19/2006	7:51:00										
testby1	C.E.M. Solutions, Inc.												
testby2	7990 W. Gulf to Lake Hwy.												
testby3	Crystal River, FL 34429												
testby4	Ph: 352-564-0441												
testfor1	Progress Energy Florida												
testfor2	Crystal River												
testfor3	Unit 5												
testfor4	Pt. 75 High Load Gas and Flow RATA												
name			5 CO2	5 CO									
sn			01415D/3379	48C-74094-375									
offset			0	0									
fullscale			20	1000									
train			1	1									
gastype			co2 3a	co 10									
scg6	4/19/2006	15:12:00	0.18	286.1	CC183009/cg6	CO	293		0		0		0
scg6	4/19/2006	15:12:15	0.16	289.2	CC183009/cg6	CO	293		0		0		0
cospan1	4/19/2006	15:12:15	0.16	289.2	CC183009/cg6	CO	293		0		0		0
scg2	4/19/2006	15:12:30	0.15	289.6	CC89066/cg2	O2	12.9	CO2	10.9		0		0
scg2	4/19/2006	15:12:45	0.14	289.4	CC89066/cg2	O2	12.9	CO2	10.9		0		0
scg2	4/19/2006	15:13:00	0.13	289.2	CC89066/cg2	O2	12.9	CO2	10.9		0		0
scg2	4/19/2006	15:13:15	0.12	288.8	CC89066/cg2	O2	12.9	CO2	10.9		0		0
scg2	4/19/2006	15:13:30	0.11	289.5	CC89066/cg2	O2	12.9	CO2	10.9		0		0
scg2	4/19/2006	15:13:45	0.11	290.4	CC89066/cg2	O2	12.9	CO2	10.9		0		0
scg2	4/19/2006	15:14:00	0.10	290.1	CC89066/cg2	O2	12.9	CO2	10.9		0		0
scg2	4/19/2006	15:14:15	1.67	271.1	CC89066/cg2	O2	12.9	CO2	10.9		0		0
scg2	4/19/2006	15:14:30	9.74	160.1	CC89066/cg2	O2	12.9	CO2	10.9		0		0
scg2	4/19/2006	15:14:45	10.70	42.7	CC89066/cg2	O2	12.9	CO2	10.9		0		0
scg2	4/19/2006	15:15:00	10.77	8.4	CC89066/cg2	O2	12.9	CO2	10.9		0		0
co2span1	4/19/2006	15:15:00	10.77	8.4	CC89066/cg2	O2	12.9	CO2	10.9		0		0
o2span1	4/19/2006	15:15:00	10.77	8.4	CC89066/cg2	O2	12.9	CO2	10.9		0		0
scg1	4/19/2006	15:15:15	10.80	0.4	CC 81224/cg1	CO2	0	NOx	0	SO2	0	O2	0
scg1	4/19/2006	15:15:30	10.82	0.0	CC 81224/cg1	CO2	0	NOx	0	SO2	0	O2	0
scg1	4/19/2006	15:15:45	10.83	0.0	CC 81224/cg1	CO2	0	NOx	0	SO2	0	O2	0
scg1	4/19/2006	15:16:00	10.85	-0.2	CC 81224/cg1	CO2	0	NOx	0	SO2	0	O2	0
scg1	4/19/2006	15:16:15	10.85	-0.1	CC 81224/cg1	CO2	0	NOx	0	SO2	0	O2	0
scg1	4/19/2006	15:16:30	10.86	-0.1	CC 81224/cg1	CO2	0	NOx	0	SO2	0	O2	0
scg1	4/19/2006	15:16:45	10.87	-0.2	CC 81224/cg1	CO2	0	NOx	0	SO2	0	O2	0
scg1	4/19/2006	15:17:00	10.79	0.0	CC 81224/cg1	CO2	0	NOx	0	SO2	0	O2	0
scg1	4/19/2006	15:17:15	3.38	0.0	CC 81224/cg1	CO2	0	NOx	0	SO2	0	O2	0
scg1	4/19/2006	15:17:30	0.34	0.0	CC 81224/cg1	CO2	0	NOx	0	SO2	0	O2	0
scg1	4/19/2006	15:17:45	0.22	0.0	CC 81224/cg1	CO2	0	NOx	0	SO2	0	O2	0
co2zero1	4/19/2006	15:17:45	0.22	0.0	CC 81224/cg1	CO2	0	NOx	0	SO2	0	O2	0
noxzero1	4/19/2006	15:17:30	0.34	0.0	CC 81224/cg1	CO2	0	NOx	0	SO2	0	O2	0
so2zero1	4/19/2006	15:17:30	0.34	0.0	CC 81224/cg1	CO2	0	NOx	0	SO2	0	O2	0
cozero1	4/19/2006	15:17:30	0.34	0.0	CC 81224/cg1	CO2	0	NOx	0	SO2	0	O2	0
run8	4/19/2006	15:23:00	12.95	4.2									
run8	4/19/2006	15:23:15	12.97	6.1									
run8	4/19/2006	15:23:30	12.92	5.2									
run8	4/19/2006	15:23:45	12.98	3.7									
run8	4/19/2006	15:24:00	12.98	3.0									
run8	4/19/2006	15:24:15	12.95	2.1									
run8	4/19/2006	15:24:30	12.90	2.2									
run8	4/19/2006	15:24:45	12.90	3.1									
run8	4/19/2006	15:25:00	13.03	3.0									
run8	4/19/2006	15:25:15	12.94	2.1									
run8	4/19/2006	15:25:30	12.98	2.2									
run8	4/19/2006	15:25:45	13.00	3.6									
run8	4/19/2006	15:26:00	12.95	4.3									
run8	4/19/2006	15:26:15	13.03	5.9									
run8	4/19/2006	15:26:30	13.03	8.4									
run8	4/19/2006	15:26:45	13.02	8.2									
run8	4/19/2006	15:27:00	12.95	4.7									
run8	4/19/2006	15:27:15	13.03	3.6									
run8	4/19/2006	15:27:30	13.12	6.6									
run8	4/19/2006	15:27:45	13.07	8.6									
run8	4/19/2006	15:28:00	12.97	6.2									
run8	4/19/2006	15:28:15	12.92	3.6									
run8	4/19/2006	15:28:30	12.90	2.3									
run8	4/19/2006	15:28:45	12.96	2.1									
run8	4/19/2006	15:29:00	13.01	2.9									
run8	4/19/2006	15:29:15	12.93	3.6									
run8	4/19/2006	15:29:30	12.94	5.0									
run8	4/19/2006	15:29:45	12.95	6.1									
run8	4/19/2006	15:30:00	12.96	5.2									
run8	4/19/2006	15:30:15	12.99	3.7									
run8	4/19/2006	15:30:30	12.91	3.1									
run8	4/19/2006	15:30:45	12.96	2.6									
run8	4/19/2006	15:31:00	12.92	2.9									
run8	4/19/2006	15:31:15	12.96	3.1									
run8	4/19/2006	15:31:30	13.00	2.7									
run8	4/19/2006	15:31:45	12.95	3.0									
run8	4/19/2006	15:32:00	12.94	2.4									
run8	4/19/2006	15:32:15	12.96	3.1									
run8	4/19/2006	15:32:30	12.99	3.0									
run8	4/19/2006	15:32:45	13.00	2.1									
run8	4/19/2006	15:33:00	12.96	2.2									
run8	4/19/2006	15:33:15	12.93	2.7									
run8	4/19/2006	15:33:30	12.98	2.7									

filename		4/19/2006	7:51:00									
testby1	C.E.M. Solutions, Inc.											
testby2	7990 W. Gulf to Lake Hwy.											
testby3	Crystal River, FL 34429											
testby4	Ph: 352-564-0441											
testfor1	Progress Energy Florida											
testfor2	Crystal River											
testfor3	Unit 5											
testfor4	Pt. 75 High Load Gas and Flow RATA											
name				5 CO2	5 CO							
sn				01415D/3379	48C-74094-375							
offset				0	0							
fullscale				20	1000							
train				1	1							
gastype				co2 3a	co 10							
run8		4/19/2006	15:33:45	13.00	2.9							
run8		4/19/2006	15:34:00	12.98	3.2							
run8		4/19/2006	15:34:15	12.92	3.6							
run8		4/19/2006	15:34:30	12.92	8.4							
run8		4/19/2006	15:34:45	12.98	9.5							
run8		4/19/2006	15:35:00	12.96	6.4							
run8		4/19/2006	15:35:15	12.98	3.6							
run8		4/19/2006	15:35:30	12.94	2.3							
run8		4/19/2006	15:35:45	12.92	2.0							
run8		4/19/2006	15:36:00	12.92	2.1							
run8		4/19/2006	15:36:15	12.89	2.1							
run8		4/19/2006	15:36:30	13.02	2.4							
run8		4/19/2006	15:36:45	13.02	5.1							
run8		4/19/2006	15:37:00	12.98	7.4							
run8		4/19/2006	15:37:15	12.95	7.1							
run8		4/19/2006	15:37:30	12.90	4.3							
run8		4/19/2006	15:37:45	12.96	2.6							
run8		4/19/2006	15:38:00	12.97	3.2							
run8		4/19/2006	15:38:15	13.00	3.1							
run8		4/19/2006	15:38:30	12.93	2.8							
run8		4/19/2006	15:38:45	12.94	4.6							
run8		4/19/2006	15:39:00	12.99	5.0							
run8		4/19/2006	15:39:15	13.02	3.4							
run8		4/19/2006	15:39:30	12.99	2.7.							
run8		4/19/2006	15:39:45	12.97	3.1							
run8		4/19/2006	15:40:00	12.96	2.9							
run8		4/19/2006	15:40:15	12.99	2.9							
run8		4/19/2006	15:40:30	13.03	3.3							
run8		4/19/2006	15:40:45	12.97	5.1							
run8		4/19/2006	15:41:00	12.97	5.9							
run8		4/19/2006	15:41:15	12.95	4.9							
run8		4/19/2006	15:41:30	12.96	3.0							
run8		4/19/2006	15:41:45	12.95	1.8							
run8		4/19/2006	15:42:00	12.81	2.0							
run8		4/19/2006	15:42:15	12.89	2.1							
run8		4/19/2006	15:42:30	12.95	2.3							
run8		4/19/2006	15:42:45	13.02	3.1							
run8		4/19/2006	15:43:00	13.06	3.1							
run8		4/19/2006	15:43:15	12.97	2.5							
run8		4/19/2006	15:43:30	12.95	1.9							
run8		4/19/2006	15:43:45	12.93	2.1							
run8		4/19/2006	15:44:00	12.98	2.1							
run8		4/19/2006	15:44:15	13.00	2.4							
run8		4/19/2006	15:44:30	12.92	3.1							
run8		4/19/2006	15:44:45	12.87	3.1							
run8		4/19/2006	15:45:00	12.89	2.2							
run8		4/19/2006	15:45:15	12.96	1.7							
run8		4/19/2006	15:45:30	12.99	2.1							
averun8		4/19/2006	15:24:00	12.97	3.7	21						
scg4		4/19/2006	15:46:00	12.97	2.1	CC150094/cg4	NOx	243	SO2	448	0	0
scg4		4/19/2006	15:46:15	12.99	2.2	CC150094/cg4	NOx	243	SO2	448	0	0
scg4		4/19/2006	15:46:30	12.97	3.0	CC150094/cg4	NOx	243	SO2	448	0	0
scg4		4/19/2006	15:46:45	12.98	3.7	CC150094/cg4	NOx	243	SO2	448	0	0
scg4		4/19/2006	15:47:00	12.94	3.3	CC150094/cg4	NOx	243	SO2	448	0	0
scg4		4/19/2006	15:47:15	12.94	2.7	CC150094/cg4	NOx	243	SO2	448	0	0
scg4		4/19/2006	15:47:30	7.06	1.9	CC150094/cg4	NOx	243	SO2	448	0	0
scg4		4/19/2006	15:47:45	5.74	2.1	CC150094/cg4	NOx	243	SO2	448	0	0
scg4		4/19/2006	15:48:00	8.55	1.9	CC150094/cg4	NOx	243	SO2	448	0	0
scg4		4/19/2006	15:48:15	8.61	2.2	CC150094/cg4	NOx	243	SO2	448	0	0
scg4		4/19/2006	15:48:30	8.62	1.9	CC150094/cg4	NOx	243	SO2	448	0	0
scg4		4/19/2006	15:48:45	8.63	2.1	CC150094/cg4	NOx	243	SO2	448	0	0
scg4		4/19/2006	15:49:00	8.62	1.9	CC150094/cg4	NOx	243	SO2	448	0	0
scg4		4/19/2006	15:49:15	8.63	2.1	CC150094/cg4	NOx	243	SO2	448	0	0
noxspan1		4/19/2006	15:49:15	8.63	2.1	CC150094/cg4	NOx	243	SO2	448	0	0
so2span1		4/19/2006	15:49:00	8.62	1.9	CC150094/cg4	NOx	243	SO2	448	0	0
scg6		4/19/2006	15:49:30	8.63	2.1	CC183009/cg6	CO	293		0	0	0
scg6		4/19/2006	15:49:45	8.63	2.2	CC183009/cg6	CO	293		0	0	0
scg6		4/19/2006	15:50:00	8.62	2.1	CC183009/cg6	CO	293		0	0	0
scg6		4/19/2006	15:50:15	8.63	2.1	CC183009/cg6	CO	293		0	0	0
scg6		4/19/2006	15:50:30	8.62	2.1	CC183009/cg6	CO	293		0	0	0
scg6		4/19/2006	15:50:45	8.62	2.1	CC183009/cg6	CO	293		0	0	0
scg6		4/19/2006	15:51:00	8.63	1.9	CC183009/cg6	CO	293		0	0	0
scg6		4/19/2006	15:51:15	7.05	11.0	CC183009/cg6	CO	293		0	0	0
scg6		4/19/2006	15:51:30	0.82	108.4	CC183009/cg6	CO	293		0	0	0

filename	4/19/2006	7:51:00											
testby1	C.E.M. Solutions, Inc.												
testby2	7990 W. Gulf to Lake Hwy.												
testby3	Crystal River, FL 34429												
testby4	Ph: 352-564-0441												
testfor1	Progress Energy Florida												
testfor2	Crystal River												
testfor3	Unit 5												
testfor4	*Pt. 75 High Load Gas and Flow RATA*												
name			5 CO2	5 CO									
sn			01415D/3379	48C-74094-375									
offset			0	0									
fullscale			20	1000									
train			1	1									
gastype			co2 3a	co 10									
scg6	4/19/2006	15:51:45	0.25	224.1	CC183009/cg6	CO	293		0		0		0
scg6	4/19/2006	15:52:00	0.20	278.3	CC183009/cg6	CO	293		0		0		0
scg6	4/19/2006	15:52:15	0.17	288.5	CC183009/cg6	CO	293		0		0		0
scg6	4/19/2006	15:52:30	0.15	289.2	CC183009/cg6	CO	293		0		0		0
cospan1	4/19/2006	15:52:30	0.15	289.2	CC183009/cg6	CO	293		0		0		0
scg2	4/19/2006	15:52:45	0.14	289.6	CC89066/cg2	O2	12.9	CO2	10.9		0		0
scg2	4/19/2006	15:53:00	0.13	289.3	CC89066/cg2	O2	12.9	CO2	10.9		0		0
scg2	4/19/2006	15:53:15	0.12	289.4	CC89066/cg2	O2	12.9	CO2	10.9		0		0
scg2	4/19/2006	15:53:30	0.11	289.9	CC89066/cg2	O2	12.9	CO2	10.9		0		0
scg2	4/19/2006	15:53:45	0.10	289.9	CC89066/cg2	O2	12.9	CO2	10.9		0		0
scg2	4/19/2006	15:54:00	0.10	290.1	CC89066/cg2	O2	12.9	CO2	10.9		0		0
scg2	4/19/2006	15:54:15	0.09	289.4	CC89066/cg2	O2	12.9	CO2	10.9		0		0
scg2	4/19/2006	15:54:30	3.43	253.9	CC89066/cg2	O2	12.9	CO2	10.9		0		0
scg2	4/19/2006	15:54:45	10.28	125.1	CC89066/cg2	O2	12.9	CO2	10.9		0		0
scg2	4/19/2006	15:55:00	10.71	32.0	CC89066/cg2	O2	12.9	CO2	10.9		0		0
scg2	4/19/2006	15:55:15	10.77	5.2	CC89066/cg2	O2	12.9	CO2	10.9		0		0
scg2	4/19/2006	15:55:30	10.80	-0.5	CC89066/cg2	O2	12.9	CO2	10.9		0		0
co2span1	4/19/2006	15:55:15	10.77	5.2	CC89066/cg2	O2	12.9	CO2	10.9		0		0
o2span1	4/19/2006	15:55:15	10.77	5.2	CC89066/cg2	O2	12.9	CO2	10.9		0		0
scg1	4/19/2006	15:55:45	10.81	-0.1	CC 81224/cg1	CO2	0	NOx	0	SO2	0	O2	0
scg1	4/19/2006	15:56:00	10.83	-0.2	CC 81224/cg1	CO2	0	NOx	0	SO2	0	O2	0
scg1	4/19/2006	15:56:15	10.84	0.0	CC 81224/cg1	CO2	0	NOx	0	SO2	0	O2	0
scg1	4/19/2006	15:56:30	10.85	0.0	CC 81224/cg1	CO2	0	NOx	0	SO2	0	O2	0
scg1	4/19/2006	15:56:45	10.85	0.0	CC 81224/cg1	CO2	0	NOx	0	SO2	0	O2	0
scg1	4/19/2006	15:57:00	10.85	0.0	CC 81224/cg1	CO2	0	NOx	0	SO2	0	O2	0
scg1	4/19/2006	15:57:15	10.86	-0.2	CC 81224/cg1	CO2	0	NOx	0	SO2	0	O2	0
scg1	4/19/2006	15:57:30	8.67	0.0	CC 81224/cg1	CO2	0	NOx	0	SO2	0	O2	0
scg1	4/19/2006	15:57:45	0.93	-0.2	CC 81224/cg1	CO2	0	NOx	0	SO2	0	O2	0
scg1	4/19/2006	15:58:00	0.27	0.0	CC 81224/cg1	CO2	0	NOx	0	SO2	0	O2	0
scg1	4/19/2006	15:58:15	0.20	0.0	CC 81224/cg1	CO2	0	NOx	0	SO2	0	O2	0
co2zero1	4/19/2006	15:58:15	0.20	0.0	CC 81224/cg1	CO2	0	NOx	0	SO2	0	O2	0
o2zero1	4/19/2006	15:58:15	0.20	0.0	CC 81224/cg1	CO2	0	NOx	0	SO2	0	O2	0
noxzero1	4/19/2006	15:58:15	0.20	0.0	CC 81224/cg1	CO2	0	NOx	0	SO2	0	O2	0
so2zero1	4/19/2006	15:57:00	10.85	0.0	CC 81224/cg1	CO2	0	NOx	0	SO2	0	O2	0
cozero1	4/19/2006	15:56:45	10.85	0.0	CC 81224/cg1	CO2	0	NOx	0	SO2	0	O2	0
run9	4/19/2006	16:02:30	12.89	5.0									
run9	4/19/2006	16:02:45	12.91	6.1									
run9	4/19/2006	16:03:00	12.85	5.9									
run9	4/19/2006	16:03:15	12.90	5.1									
run9	4/19/2006	16:03:30	12.95	4.9									
run9	4/19/2006	16:03:45	12.87	4.2									
run9	4/19/2006	16:04:00	12.91	4.2									
run9	4/19/2006	16:04:15	12.92	4.2									
run9	4/19/2006	16:04:30	12.95	3.1									
run9	4/19/2006	16:04:45	13.00	3.2									
run9	4/19/2006	16:05:00	12.87	3.1									
run9	4/19/2006	16:05:15	12.87	3.1									
run9	4/19/2006	16:05:30	12.93	4.0									
run9	4/19/2006	16:05:45	13.00	4.7									
run9	4/19/2006	16:06:00	13.02	5.3									
run9	4/19/2006	16:06:15	13.00	5.9									
run9	4/19/2006	16:06:30	13.02	6.1									
run9	4/19/2006	16:06:45	12.96	5.5									
run9	4/19/2006	16:07:00	12.94	3.9									
run9	4/19/2006	16:07:15	12.99	2.3									
run9	4/19/2006	16:07:30	13.00	1.7									
run9	4/19/2006	16:07:45	12.97	2.5									
run9	4/19/2006	16:08:00	13.00	3.2									
run9	4/19/2006	16:08:15	13.03	3.6									
run9	4/19/2006	16:08:30	13.08	4.4									
run9	4/19/2006	16:08:45	13.04	5.1									
run9	4/19/2006	16:09:00	12.97	4.3									
run9	4/19/2006	16:09:15	13.03	3.4									
run9	4/19/2006	16:09:30	12.99	4.6									
run9	4/19/2006	16:09:45	13.06	7.2									
run9	4/19/2006	16:10:00	13.00	7.8									
run9	4/19/2006	16:10:15	12.99	6.5									
run9	4/19/2006	16:10:30	13.00	5.0									
run9	4/19/2006	16:10:45	13.01	5.8									
run9	4/19/2006	16:11:00	13.09	11.5									
run9	4/19/2006	16:11:15	13.06	13.1									
run9	4/19/2006	16:11:30	13.07	11.3									
run9	4/19/2006	16:11:45	12.99	8.9									
run9	4/19/2006	16:12:00	12.91	5.7									

filename		4/19/2006	7:51:00									
testby1	C.E.M. Solutions, Inc.											
testby2	7990 W. Gulf to Lake Hwy.											
testby3	Crystal River, FL 34429											
testby4	Ph: 352-564-0441											
testfor1	Progress Energy Florida											
testfor2	Crystal River											
testfor3	Unit 5											
testfor4	Pt. 75 High Load Gas and Flow RATA											
name				5 CO2	5 CO							
sn				01415D/3379	48C-74094-375							
offset				0	0							
fullscale				20	1000							
train				1	1							
gastype				co2 3a	co 10							
run9		4/19/2006	16:12:15	12.95	3.4							
run9		4/19/2006	16:12:30	13.06	2.9							
run9		4/19/2006	16:12:45	13.07	3.8							
run9		4/19/2006	16:13:00	13.03	6.0							
run9		4/19/2006	16:13:15	12.97	5.3							
run9		4/19/2006	16:13:30	13.04	5.1							
run9		4/19/2006	16:13:45	13.09	5.7							
run9		4/19/2006	16:14:00	13.01	4.9							
run9		4/19/2006	16:14:15	12.98	3.6							
run9		4/19/2006	16:14:30	12.99	2.7							
run9		4/19/2006	16:14:45	13.04	2.5							
run9		4/19/2006	16:15:00	13.14	4.6							
run9		4/19/2006	16:15:15	13.06	7.3							
run9		4/19/2006	16:15:30	13.04	6.9							
run9		4/19/2006	16:15:45	13.02	5.5							
run9		4/19/2006	16:16:00	13.01	4.9							
run9		4/19/2006	16:16:15	13.01	4.2							
run9		4/19/2006	16:16:30	13.00	5.1							
run9		4/19/2006	16:16:45	13.08	4.5							
run9		4/19/2006	16:17:00	13.05	4.4							
run9		4/19/2006	16:17:15	13.07	5.1							
run9		4/19/2006	16:17:30	13.06	5.1							
run9		4/19/2006	16:17:45	12.98	5.1							
run9		4/19/2006	16:18:00	13.07	7.5							
run9		4/19/2006	16:18:15	13.05	9.4							
run9		4/19/2006	16:18:30	12.99	9.2							
run9		4/19/2006	16:18:45	13.04	8.7							
run9		4/19/2006	16:19:00	13.05	8.8							
run9		4/19/2006	16:19:15	13.05	6.8							
run9		4/19/2006	16:19:30	13.06	4.7							
run9		4/19/2006	16:19:45	13.06	4.5							
run9		4/19/2006	16:20:00	13.13	8.0							
run9		4/19/2006	16:20:15	13.19	12.7							
run9		4/19/2006	16:20:30	13.09	12.3							
run9		4/19/2006	16:20:45	13.10	7.6							
run9		4/19/2006	16:21:00	12.98	5.2							
run9		4/19/2006	16:21:15	13.03	4.9							
run9		4/19/2006	16:21:30	13.00	6.3							
run9		4/19/2006	16:21:45	13.00	7.1							
run9		4/19/2006	16:22:00	13.01	5.8							
run9		4/19/2006	16:22:15	12.98	4.5							
run9		4/19/2006	16:22:30	13.08	3.2							
run9		4/19/2006	16:22:45	13.07	3.8							
run9		4/19/2006	16:23:00	13.01	4.2							
run9		4/19/2006	16:23:15	13.02	4.2							
run9		4/19/2006	16:23:30	13.01	5.3							
run9		4/19/2006	16:23:45	13.04	5.5							
run9		4/19/2006	16:24:00	13.06	4.2							
run9		4/19/2006	16:24:15	12.98	3.3							
run9		4/19/2006	16:24:30	12.98	3.2							
run9		4/19/2006	16:24:45	13.02	5.5							
averun9		4/19/2006	16:04:00	13.02	5.5	21						
scg4		4/19/2006	16:25:00	13.05	4.8	CC150094/cg4	NOx	243	SO2	448	0	0
scg4		4/19/2006	16:25:15	13.11	3.9	CC150094/cg4	NOx	243	SO2	448	0	0
scg4		4/19/2006	16:25:30	13.06	4.5	CC150094/cg4	NOx	243	SO2	448	0	0
scg4		4/19/2006	16:25:45	13.02	5.1	CC150094/cg4	NOx	243	SO2	448	0	0
scg4		4/19/2006	16:26:00	13.00	6.4	CC150094/cg4	NOx	243	SO2	448	0	0
scg4		4/19/2006	16:26:15	13.05	7.3	CC150094/cg4	NOx	243	SO2	448	0	0
scg4		4/19/2006	16:26:30	11.37	6.5	CC150094/cg4	NOx	243	SO2	448	0	0
scg4		4/19/2006	16:26:45	3.67	4.5	CC150094/cg4	NOx	243	SO2	448	0	0
scg4		4/19/2006	16:27:00	8.18	2.9	CC150094/cg4	NOx	243	SO2	448	0	0
scg4		4/19/2006	16:27:15	8.60	2.1	CC150094/cg4	NOx	243	SO2	448	0	0
scg4		4/19/2006	16:27:30	8.62	2.1	CC150094/cg4	NOx	243	SO2	448	0	0
scg4		4/19/2006	16:27:45	8.62	2.1	CC150094/cg4	NOx	243	SO2	448	0	0
scg4		4/19/2006	16:28:00	8.62	2.1	CC150094/cg4	NOx	243	SO2	448	0	0
scg4		4/19/2006	16:28:15	8.62	2.1	CC150094/cg4	NOx	243	SO2	448	0	0
scg4		4/19/2006	16:28:30	8.62	2.1	CC150094/cg4	NOx	243	SO2	448	0	0
noxspan1		4/19/2006	16:28:30	8.62	2.1	CC150094/cg4	NOx	243	SO2	448	0	0
so2span1		4/19/2006	16:28:30	8.62	2.1	CC150094/cg4	NOx	243	SO2	448	0	0
scg6		4/19/2006	16:28:45	8.62	2.1	CC183009/cg6	CO	293		0	0	0
scg6		4/19/2006	16:29:00	8.62	2.0	CC183009/cg6	CO	293		0	0	0
scg6		4/19/2006	16:29:15	8.62	1.9	CC183009/cg6	CO	293		0	0	0
scg6		4/19/2006	16:29:30	8.62	2.2	CC183009/cg6	CO	293		0	0	0
scg6		4/19/2006	16:29:45	8.63	1.8	CC183009/cg6	CO	293		0	0	0

filename		4/19/2006	7:51:00										
testby1	C.E.M. Solutions, Inc.												
testby2	7990 W. Gulf to Lake Hwy.												
testby3	Crystal River, FL 34429												
testby4	Ph: 352-564-0441												
testfor1	Progress Energy Florida												
testfor2	Crystal River												
testfor3	Unit 5												
testfor4	Pt. 75 High Load Gas and Flow RATA												
name				5 CO2	5 CO								
sn				01415D/3379	48C-74094-375								
offset				0	0								
fullscale				20	1000								
train				1	1								
gastype				co2 3a	co 10								
scg6		4/19/2006	16:30:00	8.62	2.1	CC183009/cg6	CO	293		0	0	0	
scg6		4/19/2006	16:30:15	8.62	1.9	CC183009/cg6	CO	293		0	0	0	
scg6		4/19/2006	16:30:30	8.11	7.7	CC183009/cg6	CO	293		0	0	0	
scg6		4/19/2006	16:30:45	1.52	73.5	CC183009/cg6	CO	293		0	0	0	
scg6		4/19/2006	16:31:00	0.27	217.5	CC183009/cg6	CO	293		0	0	0	
scg6		4/19/2006	16:31:15	0.21	272.9	CC183009/cg6	CO	293		0	0	0	
scg6		4/19/2006	16:31:30	0.17	287.7	CC183009/cg6	CO	293		0	0	0	
scg6		4/19/2006	16:31:45	0.15	289.0	CC183009/cg6	CO	293		0	0	0	
cospan1		4/19/2006	16:31:45	0.15	289.0	CC183009/cg6	CO	293		0	0	0	
scg2		4/19/2006	16:32:00	0.14	289.1	CC89066/cg2	O2	12.9	CO2	10.9	0	0	
scg2		4/19/2006	16:32:15	0.13	289.1	CC89066/cg2	O2	12.9	CO2	10.9	0	0	
scg2		4/19/2006	16:32:30	0.12	288.6	CC89066/cg2	O2	12.9	CO2	10.9	0	0	
scg2		4/19/2006	16:32:45	0.12	289.4	CC89066/cg2	O2	12.9	CO2	10.9	0	0	
scg2		4/19/2006	16:33:00	0.11	289.4	CC89066/cg2	O2	12.9	CO2	10.9	0	0	
scg2		4/19/2006	16:33:15	0.10	288.8	CC89066/cg2	O2	12.9	CO2	10.9	0	0	
scg2		4/19/2006	16:33:30	0.09	289.7	CC89066/cg2	O2	12.9	CO2	10.9	0	0	
scg2		4/19/2006	16:33:45	3.46	260.4	CC89066/cg2	O2	12.9	CO2	10.9	0	0	
scg2		4/19/2006	16:34:00	10.28	116.5	CC89066/cg2	O2	12.9	CO2	10.9	0	0	
scg2		4/19/2006	16:34:15	10.71	34.6	CC89066/cg2	O2	12.9	CO2	10.9	0	0	
scg2		4/19/2006	16:34:30	10.76	3.7	CC89066/cg2	O2	12.9	CO2	10.9	0	0	
scg2		4/19/2006	16:34:45	10.79	0.3	CC89066/cg2	O2	12.9	CO2	10.9	0	0	
scg2		4/19/2006	16:35:00	10.81	0.0	CC89066/cg2	O2	12.9	CO2	10.9	0	0	
scg2		4/19/2006	16:35:15	10.82	0.0	CC89066/cg2	O2	12.9	CO2	10.9	0	0	
scg2		4/19/2006	16:35:30	10.83	0.0	CC89066/cg2	O2	12.9	CO2	10.9	0	0	
co2span1		4/19/2006	16:34:45	10.79	0.3	CC89066/cg2	O2	12.9	CO2	10.9	0	0	
o2span1		4/19/2006	16:35:00	10.81	0.0	CC89066/cg2	O2	12.9	CO2	10.9	0	0	
scg1		4/19/2006	16:35:45	10.84	0.0	CC 81224/cg1	CO2	0	NOx	0	SO2	0 O2	0
scg1		4/19/2006	16:36:00	10.85	0.0	CC 81224/cg1	CO2	0	NOx	0	SO2	0 O2	0
scg1		4/19/2006	16:36:15	10.85	0.0	CC 81224/cg1	CO2	0	NOx	0	SO2	0 O2	0
scg1		4/19/2006	16:36:30	10.85	0.0	CC 81224/cg1	CO2	0	NOx	0	SO2	0 O2	0
scg1		4/19/2006	16:36:45	10.86	0.0	CC 81224/cg1	CO2	0	NOx	0	SO2	0 O2	0
scg1		4/19/2006	16:37:00	10.86	0.0	CC 81224/cg1	CO2	0	NOx	0	SO2	0 O2	0
scg1		4/19/2006	16:37:15	10.86	-0.4	CC 81224/cg1	CO2	0	NOx	0	SO2	0 O2	0
scg1		4/19/2006	16:37:30	10.42	0.0	CC 81224/cg1	CO2	0	NOx	0	SO2	0 O2	0
scg1		4/19/2006	16:37:45	2.14	-0.2	CC 81224/cg1	CO2	0	NOx	0	SO2	0 O2	0
scg1		4/19/2006	16:38:00	0.31	-0.2	CC 81224/cg1	CO2	0	NOx	0	SO2	0 O2	0
scg1		4/19/2006	16:38:15	0.22	-0.2	CC 81224/cg1	CO2	0	NOx	0	SO2	0 O2	0
co2zero1		4/19/2006	16:38:15	0.22	-0.2	CC 81224/cg1	CO2	0	NOx	0	SO2	0 O2	0
o2zero1		4/19/2006	16:38:15	0.22	-0.2	CC 81224/cg1	CO2	0	NOx	0	SO2	0 O2	0
noxzero1		4/19/2006	16:37:30	10.42	0.0	CC 81224/cg1	CO2	0	NOx	0	SO2	0 O2	0
so2zero1		4/19/2006	16:38:00	0.31	-0.2	CC 81224/cg1	CO2	0	NOx	0	SO2	0 O2	0
cozero1		4/19/2006	16:37:45	2.14	-0.2	CC 81224/cg1	CO2	0	NOx	0	SO2	0 O2	0
so2zero													
so2span													
noxzero													
noxspan													
co2zero													
co2span													
o2zero													
o2span													
thczero													
thcspan													
cozero													
cospan													
so2ezero	Parameter Not Found												
so2mid	Parameter Not Found												
so2high	Parameter Not Found												
noxezero	Parameter Not Found												
noxlow	Parameter Not Found												
noxmid	Parameter Not Found												
noxhigh	Parameter Not Found												
co2ezero	Parameter Not Found												
co2mid	Parameter Not Found												
co2high	Parameter Not Found												
o2ezero	Parameter Not Found												
o2mid	Parameter Not Found												
o2high	Parameter Not Found												
thcezero	Parameter Not Found												
thclow	Parameter Not Found												
thcmid	Parameter Not Found												
thchigh	Parameter Not Found												
coezero	Parameter Not Found												
colow	Parameter Not Found												
comid	Parameter Not Found												

filename	4/19/2006 7:51:00		
testby1	C.E.M. Solutions, Inc.		
testby2	7990 W. Gulf to Lake Hwy.		
testby3	Crystal River, FL 34429		
testby4	Ph: 352-564-0441		
testfor1	Progress Energy Florida		
testfor2	Crystal River		
testfor3	Unit 5		
testfor4	Pt. 75 High Load Gas and Flow RATA		
name		5 CO2	5 CO
sn		01415D/3379	48C-74094-375
offset		0	0
fullscale		20	1000
train		1	1
gastype		co2 3a	co 10
cohigh	Parameter Not Found		
End			

Determination of Emission Rate Change – Data Sheets

NOX DETERMINATION OF EMISSION RATE CHANGE

Emission Rate Change
40 CFR 60 Appendix C

Test Data		Baseline 6/5/2006 lb/mmbtu	Blend 5/22/2006 lb/mmbtu	3.3 Eq 2 Varance S^2	3.3 Eq 2 Varance S^2
Run	1	0.501	0.443	2.92E-05	8.66E-05
Run	2	0.504	0.436	5.76E-06	0.000266
Run	3	0.502	0.455	1.94E-05	7.25E-06
Run	4	0.513	0.455	4.36E-05	7.25E-06
Run	5	0.512	0.447	3.14E-05	2.82E-05
Run	6		0.439		0.000177
Run	7		0.446		3.98E-05
Run	8		0.453		4.79E-07
Run	9		0.456		1.36E-05
Run	10		0.457		2.2E-05
Run	11		0.456		1.36E-05
Run	12		0.452		9.47E-08
Run	13		0.485		0.001069
Run	14				
Run	15				
Run	16				
Run	17				
Run	18				
Run	19				
Run	20				
Run	21				
Sum		2.532	5.88	0.000129	0.001731
Runs		5	13		

Look-up Table t'	
2	2.920
3	2.353
4	2.132
5	2.015
6	1.943
7	1.895
8	1.860
9	1.833
10	1.812
11	1.796
12	1.782
13	1.771
14	1.761
15	1.753
16	1.746
17	1.740
18	1.734
19	1.729
20	1.725
21	1.721
22	1.717
23	1.714
24	1.711
25	1.708
26	1.706
27	1.703
28	1.701
29	1.699
>=30	1.645

3.2	Arithmetic Mean	E	0.5064	0.452308	Eq 1
3.3	Variance	S^2	3.23E-05	0.000144	Eq 2
3.4	Pooled Estimate	Sp	0.010782		Eq 3
3.5	Test Statistic	t	-9.533734		

Look-up table	na + nb -2	16
	t' 95% Confidence	1.746

Results

4.1	Significant Increase	(t > t')	NO

SO2 DETERMINATION OF EMISSION RATE CHANGE

Emission Rate Change
40 CFR 60 Appendix C

Test Data		Baseline 6/5/2006 lb/mmbtu	Blend 5/22/2006 lb/mmbtu	3.3 Eq 2 Varance S^2	3.3 Eq 2 Varance S^2
Run	1	1.071	1.056	2.3E-05	7.25E-06
Run	2	1.077	1.061	1.44E-06	5.92E-05
Run	3	1.077	1.064	1.44E-06	0.000114
Run	4	1.082	1.056	3.84E-05	7.25E-06
Run	5	1.072	1.063	1.44E-05	9.39E-05
Run	6		1.059		3.24E-05
Run	7		1.063		9.39E-05
Run	8		1.068		0.000216
Run	9		1.07		0.000279
Run	10		1.059		3.24E-05
Run	11		1.037		0.000266
Run	12		1.021		0.001044
Run	13		1.016		0.001392
Run	14				
Run	15				
Run	16				
Run	17				
Run	18				
Run	19				
Run	20				
Run	21				
Sum		5.379	13.693	7.88E-05	0.003637
Runs		5	13		

Look-up Table t'	
2	2.920
3	2.353
4	2.132
5	2.015
6	1.943
7	1.895
8	1.860
9	1.833
10	1.812
11	1.796
12	1.782
13	1.771
14	1.761
15	1.753
16	1.746
17	1.740
18	1.734
19	1.729
20	1.725
21	1.721
22	1.717
23	1.714
24	1.711
25	1.708
26	1.706
27	1.703
28	1.701
29	1.699
>=30	1.645

3.2	Arithmetic Mean	E	1.0758	1.053308	Eq 1
3.3	Variance	S^2	1.97E-05	0.000303	Eq 2
3.4	Pooled Estimate	Sp	0.015239		Eq 3
3.5	Test Statistic	t	-2.804799		

Look-up table	na + nb -2	16
	t' 95% Confidence	1.746

Results

4.1	Significant Increase	(t > t')	NO

PM DETERMINATION OF EMISSION RATE CHANGE

Emission Rate Change
40 CFR 60 Appendix C

Test Data		Baseline 6/5/2006 lb/mmbtu	Blend 5/22/2006 lb/mmbtu	3.3 Eq 2 Varance S^2	3.3 Eq 2 Varance S^2
Run	1	0.003	0.004	4.44E-07	4.44E-07
Run	2	0.004	0.004	1.11E-07	4.44E-07
Run	3	0.004	0.004	1.11E-07	4.44E-07
Run	4		0.003		1.11E-07
Run	5		0.003		1.11E-07
Run	6		0.002		1.78E-06
Run	7				
Run	8				
Run	9				
Run	10				
Run	11				
Run	12				
Run	13				
Run	14				
Run	15				
Run	16				
Run	17				
Run	18				
Run	19				
Run	20				
Run	21				
	Sum	0.011	0.02	6.67E-07	3.33E-06
	Runs	3	6		

Look-up Table t'	
2	2.920
3	2.353
4	2.132
5	2.015
6	1.943
7	1.895
8	1.860
9	1.833
10	1.812
11	1.796
12	1.782
13	1.771
14	1.761
15	1.753
16	1.746
17	1.740
18	1.734
19	1.729
20	1.725
21	1.721
22	1.717
23	1.714
24	1.711
25	1.708
26	1.706
27	1.703
28	1.701
29	1.699
>=30	1.645

3.2	Arithmetic Mean	E	0.003667	0.003333	Eq 1
3.3	Variance	S^2	3.33E-07	6.67E-07	Eq 2
3.4	Pooled Estimate	Sp	0.000756		Eq 3
3.5	Test Statistic	t	-0.62361		

Look-up table	na + nb -2	7
	t' 95% Confidence	1.895

Results

4.1	Significant Increase	(t > t')	NO

CO DETERMINATION OF EMISSION RATE CHANGE

Emission Rate Change
40 CFR 60 Appendix C

Test Data		Baseline 4/19/2006 lb/mmbtu	Blend 5/22/2006 lb/mmbtu	3.3 Eq 2 Varance S^2	3.3 Eq 2 Varance S^2
Run	1	0.007	0.031	2.78E-06	2.25E-06
Run	2	0.005	0.058	1.11E-07	0.00065
Run	3	0.006	0.033	4.44E-07	2.5E-07
Run	4	0.006	0.03	4.44E-07	6.25E-06
Run	5	0.006	0.024	4.44E-07	7.22E-05
Run	6	0.004	0.019	1.78E-06	0.000182
Run	7	0.004		1.78E-06	
Run	8	0.004		1.78E-06	
Run	9	0.006		4.44E-07	
Run	10				
Run	11				
Run	12				
Run	13				
Run	14				
Run	15				
Run	16				
Run	17				
Run	18				
Run	19				
Run	20				
Run	21				
	Sum	0.048	0.195	0.00001	0.000914
	Runs	9	6		

Look-up Table t'	
2	2.920
3	2.353
4	2.132
5	2.015
6	1.943
7	1.895
8	1.860
9	1.833
10	1.812
11	1.796
12	1.782
13	1.771
14	1.761
15	1.753
16	1.746
17	1.740
18	1.734
19	1.729
20	1.725
21	1.721
22	1.717
23	1.714
24	1.711
25	1.708
26	1.706
27	1.703
28	1.701
29	1.699
>=30	1.645

3.2	Arithmetic Mean	E	0.005333	0.0325	Eq 1
3.3	Variance	S^2	1.25E-06	0.000183	Eq 2
3.4	Pooled Estimate	Sp	0.008428		Eq 3
3.5	Test Statistic	t	6.115625		

Look-up table	na + nb -2	13
	t' 95% Confidence	1.771

Results

4.1	Significant Increase	(t > t')	YES