TECHNICAL EVALUATION
&
PRELIMINARY DETERMINATION

PROJECT

Draft Air Construction Permit No. 0470002-053-AC (PSD-FL-297B)

Clarification of Conditions in PSD-FL-297
And Permanent Shutdown of Emission Units

COUNTY

Hamilton County, Florida

APPLICANT

White Springs Agricultural Chemicals, Inc.
Suwannee River/Swift Creek Complex
ARMS Facility ID No. 0470002

PERMITTING AUTHORITY

Florida Department of Environmental Protection
Division of Air Resource Management
Bureau of Air Regulation
Air Permitting North

August 22, 2006

1. GENERAL PROJECT INFORMATION

Facility Description and Location

White Springs Agricultural Chemicals, Inc. operates the existing Suwannee River/Swift Creek Complex (SIC 2874), which is located 15843 SE 78th Street, White Springs, Hamilton County, Florida. Latitude and longitude are 30° 26' 27" North and 82° 47' 16" West, respectively. UTM coordinates of the site are: Zone 17, 328.3 km East and 3368.8 km North. This site is in an area that is currently in attainment (or designated as unclassifiable) for all air pollutants subject to a National Ambient Air Quality Standard (NAAQS).

Regulatory Categories

Title III: The facility is identified as a major source of hazardous air pollutants (HAP).

Title V: The facility is a Title V major source of air pollution in accordance with Chapter 213, F.A.C.

PSD: The facility is a PSD-major facility of air pollution in accordance with Rule 62-212.400, F.A.C.

NSPS: Some units are subject to a New Source Performance Standard (NSPS) in 40 CFR 60.

NESHAP: Some units are subject to a National Emission Standards for Hazardous Air Pollutants (NESHAP) in 40 CFR 63.

Project Description

The air construction permit will revise Permit No. 0470002-039-AC (PSD-FL-297) to clarify the use of the filters, scrubbers and stacks from Phosphoric Acid Plant A and C in conjunction with Phosphoric Acid Plant B. Permit No. 0470002-039-AC (PSD-FL-297) was issued on November 22, 2000. This construction permit allows the permittee to increase production at Phosphoric Acid Plant B to 100 ton/hour and 600,000 tons per consecutive 12 months of P_2O_5 input. The permit also limited fluoride emissions to 1.2 lb/hour and 3.6 tons per consecutive 12 months, based on 0.012 lb/ton of P_2O_5 input. After construction and commercial operation of B and D plants, the permittee is to permanently shutdown Phosphoric Acid Plants A and C (Specific Condition 20). However, this condition does not state the intended use of Plant A's filter, scrubber and stack and plant C's scrubber and stack. The permittee intends to use portions of Plant A and Plant C to assist with the production of phosphoric acid at plant B. Below is the revised flow diagram of Plant B incorporating Plants A and C. This permit will also recognize the permanent shutdown of six emissions units (EU) at the facility.

Processing Schedule

1/26/05: Received request to permanently shutdown six emissions units
1/24/06: Received application for the revisions to project No. 0470002-039-AC (PSD-FL-297).

2. APPLICABLE REGULATIONS

Federal Regulations

This emission unit is subject to the following federal regulations. However, none of these regulations will be affected by this permit modification.

Part	Subpart	Description
40 CFR 60	T	NSPS for Wet Process Phosphoric Acid Plant
40 CFR 63	AA	NESHAP for Phosphoric Acid Manufacturing Plants

State Regulations

This project is subject to the applicable environmental laws specified in Section 403 of the Florida Statutes (F.S.). The Florida Statutes authorize the Department of Environmental Protection to establish rules and regulations regarding air quality as part of the Florida Administrative Code (F.A.C.). In general, this project is subject to the applicable rules and regulations defined in the following Chapters of the F.A.C.

Chapter	Description
62-4	Permitting Requirements
62-204	Ambient Air Quality Requirements and Federal Regulations Adopted by Reference
62-210	Required Permits, Public Notice, Reports, Circumvention, Excess Emissions, and Forms
62-212	Preconstruction Review
62-213	Operation Permits for Major Sources of Air Pollution
62-296	Emission Limiting Standards
62-297	Testing, Continuous Monitoring, and Alternate Sampling Procedures

General PSD Applicability

The Department regulates major air pollution sources in accordance with the Prevention of Significant Deterioration (PSD) program. A pre-construction PSD review is required only in areas currently in attainment with the National Ambient Air Quality Standard (NAAQS) or areas designated as "unclassifiable" for a given pollutant. A new facility is considered "major" with respect to PSD if it emits or has the potential to emit:

- 250 tons per year or more of any regulated air pollutant, or
- 100 tons per year or more of any regulated air pollutant and the facility belongs to one of the 28 PSD Major Facility Categories, or
- 5 tons per year of lead.

For new projects at PSD-major facilities, each regulated pollutant is reviewed for PSD applicability based on emissions thresholds known as the Significant Emission Rates defined in Rule 62-210.200, F.A.C. Pollutant emissions from the project exceeding these rates are considered "significant". The applicant must employ the Best Available Control Technology (BACT) to minimize emissions of each such pollutant and evaluate the air quality impacts. Although a facility may be "major" with respect to PSD for only one regulated pollutant, it must install BACT controls for each "significant" regulated pollutants.

PSD Applicability for Project

The removal of emissions units from the facility will not result in any increases at the facility. Permit No. 0470002-039-AC (PSD-FL-297) established the PSD emission requirements for Phosphoric Acid Plant B. There will be no changes to the previously established emissions limits. The project is not subject to PSD preconstruction review. Nevertheless, an air construction permit is required to conduct the proposed work.

3. APPLICATION REVIEW

This facility processes phosphate rock to produce several products at the Suwannee River/Swift Creek Complex (two plants). The facility consists of one rock grinder, two phosphoric acid plants, two defluorinated phosphate (DFP) plants, one dical process, 2 diammonium phosphate (DAP) plants, one monoammonium (MAP)/DAP storage building, one MAP/DAP screen/shipping building, four sulfuric acid plants, two phosphoric acid filters, four superphosphoric acid plants, one green superphosphoric plant, the Swift Creek Mine (SCM) rock dryer, and one acid clarification plant. The facility also has storage silos associated with the Swift Creek Mine and the DFP plant. The permit revision will clarify the operation of Phosphoric Acid plant B (EU 020). The clarifying conditions will define the use of Phosphoric Acid Plant A's filter, scrubber and stack and the B Phosphoric Acid Plant's scrubber and stack once construction on B plant is completed. This permit will also permanently shutdown six emissions units currently not in operation at the Suwannee River and Swift Creek complexes. The emissions units are: 1) EU 006- Suwannee River Mine (SRM) Silos, 2) EU 009- SRM East Rock Dryer, 3) EU 013- SRM Rock Grinder, 4) EU 016- #1 Phosphate Rock Grinder, 5) EU 017- SRM Rock Dryer, and 6) EU 041- Dical Acid Prep.

Based on the current Title V permit, EU 020 is regulated under NSPS - 40 CFR 60, Subpart T, Standards of Performance (NSPS) for the Phosphate Fertilizer Industry: Wet-Process Phosphoric Acid Plants, adopted and incorporated by reference in Rule 62-204.800(7)(b)26., F.A.C.; Rule 62-212.300, F.A.C., General Preconstruction Review Requirements; Rule 62-212.400, F.A.C., Prevention of Significant Deterioration (PSD); and Rule 62-296.403, F.A.C., Phosphate Processing; 40 CFR 63, Subpart A - General Provisions; 40 CFR 63, Subpart AA - National Emission Standards for Hazardous Air Pollutants (NESHAP) From Phosphoric Acid Manufacturing Plants.

Permanent Shutdown of Emissions Units

The permittee requested EUs 006, 009, 013, 016, 017, and 041 be permanently shutdown. Currently, none these units are operating and the permittee has no intention to operate them in the future. The original operating permit or associated air construction permit will no longer be valid for the six emission units. Any future plans to restart any of these units will require the permittee to submit an air construction permit application.

Clarification of Existing Conditions in Permit No. 0470002-039-AC (PSD-FL-297)

Permit No. 0470002-039-AC (PSD-FL-297) was issued on November 22, 2000. This construction permit allows the permittee to increase production at Phosphoric Acid Plant B to 100 ton/hour and 600,000 tons per consecutive 12 months of P_2O_5 input. The permit also limited fluoride emissions to 1.2 lb/hour and 3.6 tons per consecutive 12 months, based on 0.012 lb/ton of P_2O_5 input. After construction and commercial operation of B and D plants, the permittee is to permanently shutdown Phosphoric Acid Plants A and C (Specific Condition 20).

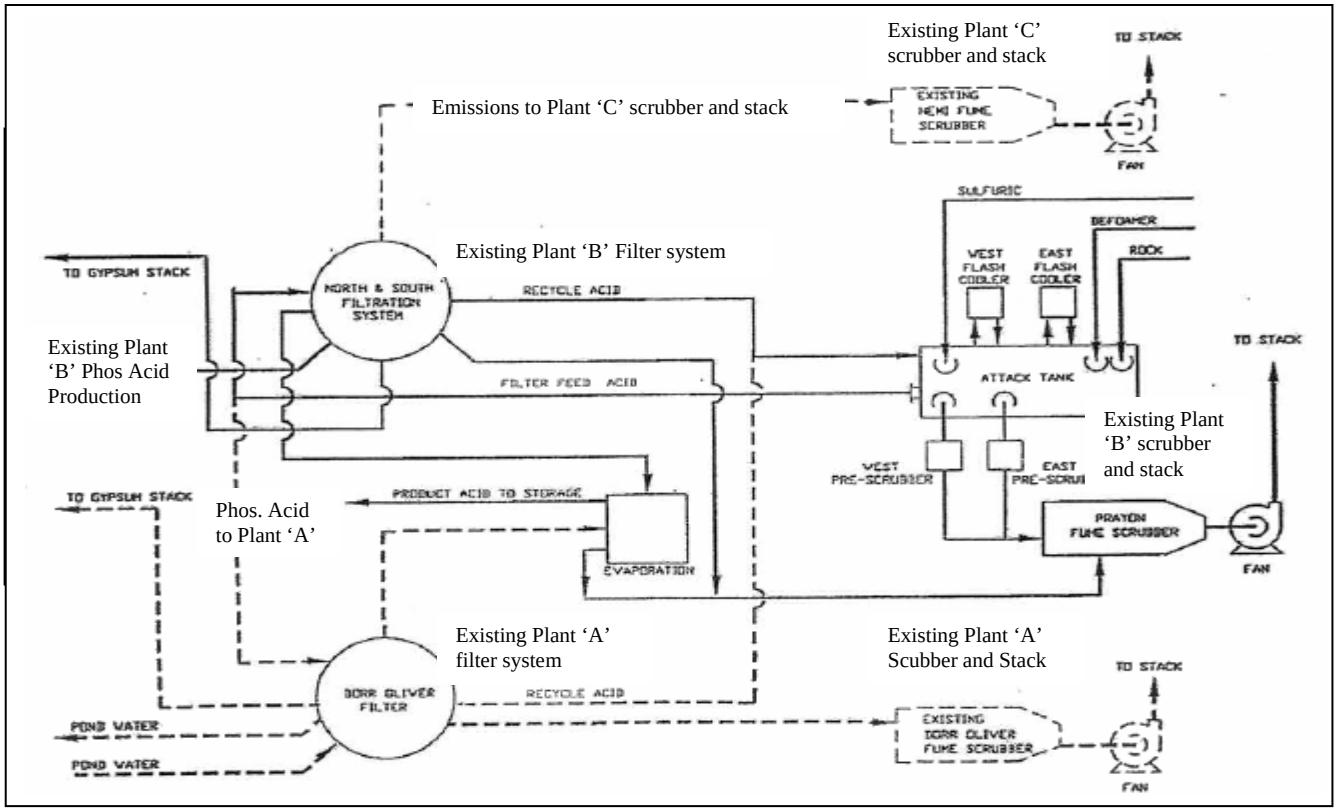

However, this condition does not state the intended use of Plant A's filter, scrubber and stack and plant C's scrubber and stack. The permittee intends to use portions of Plant A and Plant C to assist with the production of phosphoric acid at plant B. Above is the revised flow diagram of Plant B incorporating Plants A and C.

Plant A will not be operational. Plant A's filter system will be used when more acid is produced than can be accommodated by the Plant B filter system. The Plant A filter system will not operate independently and will assist Plant B. Fluoride emissions from Plant A filter system will controlled by the existing Plant A scrubber system and will vent through the existing Plant A stack.

Plant C will not be operational. The Plant C scrubber and stack will be used to control emissions from the plant B product produced and filtered from Plant B. Plant C scrubber will operate continuously with the operation of Plant B. Plant C scrubber and stack will essentially become the second scrubber and stack for Plant B (i.e. Plant B scrubber and stack #2) used to control fluoride emissions.

Plants A and C specific conditions will be removed from the existing Title V permit as specified in the permit. Permit No. 0470002-039-AC (PSD-FL-297) will be revised to include the Plant A (filter, scrubber and stack) and C (scrubber and stack) components as part of B Plant. All emissions from stacks A, B, and C shall comply with all emissions standards for Plant B. Fluoride emissions from stacks A, B, and C shall not exceed 1.2 lb/hour and 3.6 tons per consecutive 12 months based on the 0.012 lb/ton of P_2O_5 input. Initial and annual testing requirements will be established for the testing scenarios required to comply with the emissions standard. Initial testing will require the plant to test stacks B and C to meet the limit once the plant has commenced commercial operation. Within 45 days after initial start up of the Plant A filters, the permittee must test all three stacks to show compliance with the standard. Annual stack tests will require all three stacks be tested to show compliance. Specific Condition 11 will be revised to reflect testing requirements.

Conclusion

The six emissions units will be identified as shutdown units. The permittee shall comply with the emission limits established in Permit No. 0470002-039-AC (PSD-FL-297) at all times including when all three stacks are operating or when only B and C are operating. Initial and annual testing will be required to show compliance.

4. PRELIMINARY DETERMINATION

The Department makes a preliminary determination that the proposed project will comply with the applicable air pollution regulations. This determination is based on a technical review of the application, the preliminary design, reasonable assurances provided by the applicant, and the conditions specified in the draft permit. No air quality modeling analysis is required because the project does not result in a significant increase in emissions. Bobby Bull is the project engineer responsible for reviewing the application and drafting the permit. Additional details of this analysis may be obtained by contacting the project engineer at the Department's Bureau of Air Regulation at Mail Station #5505, 2600 Blair Stone Road, Tallahassee, Florida 32399-2400.

Filename: 0470002-053tepd.doc
Directory: C:\Documents and Settings\friday_b\Local Settings\Temp
Template: C:\Documents and Settings\friday_b\Application Data\Microsoft\Templates\Normal.dot
Title: TECHNICAL EVALUATION
Subject:
Author: Robert Bull
Keywords:
Comments:
Creation Date: 1/24/2005 9:08:00 AM
Change Number: 77
Last Saved On: 8/22/2006 11:44:00 AM
Last Saved By: Bull_R
Total Editing Time: 380 Minutes
Last Printed On: 8/25/2006 9:02:00 AM
As of Last Complete Printing
Number of Pages: 5
Number of Words: 1,949 (approx.)
Number of Characters: 10,646 (approx.)