PREMIER
CHEMICALS, LLC

State Road 382 North
P.O. Box 160
Port St. Joe
FL 32456
Tel: (850) 227-1167
Fax: (850) 229-6187

SFV 7/1/04
KW 7/1/04

PREMIER CHEMICALS, LLC.

June 28, 2004

Sandra F. Veazey
Air Program Administrator
Florida Department of Environmental Protection
Northwest District
160 Governmental Center
Pensacola, FL 32502

RE: Application for a FESOP Permit
File Number 0450001-0004-AF
Premier Chemicals, LLC, Port St. Joe, Florida.

Dear Ms. Veazey:

This letter is in response to your additional information request letter dated June 9, 2004, regarding the reference permit application. Each item in the letter is addressed by restating the item for easy reference, and is immediately followed by our response.

1. *Under the Facility Supplemental Information Section, PRECAUTIONS TO PREVENT EMISSIONS OF UNCONFINED PARTICULATE MATTER has not been attached. Please provide a current version of this attachment.*

   Our records show that this document was attached to the application that was sent over the internet. However, for some reason, the permitting engineer could not open it. A hard copy is attached to this letter.

2. *For both Emissions Units 006 and 007, at EU Pollutant Allowable Information Section – Particulate Matter, we understand that you wish to request 3.26 lb/hr and 14.4 tons/year. Please confirm this.*

   We confirm that we request the emission rates stated as potential emissions from each of the emissions units 006 and 007.

3. *For both Emissions Units 006 and 007, at Emission Unit Pollutant Information Section – PM10, PM10 is shown as EL. We believe this should be as NS. Please confirm this.*

   We agree with the interpretation/clarification that although PM is an EL-pollutant, PM10 is not, for the purposes of a non-Title V permit.

RECEIVED
JUN 29 2004

PREMIER
CHEMICALS, LLC

State Road 382 North
P.O. Box 160
Port St. Joe
FL 32456
Tel: (850) 227-1167
Fax: (850) 229-6187

4. *For both Emissions Units 006 and 007, for SO_2, please provide a pollutant regulatory code.*

   Based on conversations between Mr. Daniel N. Hlaing, P.E. and Mr. Owen Mancarella (FDEP permitting engineer at the NW District Office), the appropriate pollutant regulatory code is EL for SO_2, based on the current Title V permit conditions A.1 and A.3. However, we propose that the condition A.3 be eliminated or revised to exclude the fuel usage monitoring requirement since typical sulfur content of pipeline quality natural gas is much lower than 0.1% by weight (as shown in the attached printout from Florida Gas). The SO_2 emission factor used in the potential emissions calculations (0.75 lb/MMCF) is based on a conservative assumption of 2,500 gr/MMCF (0.25 gr/HCF) of sulfur in the natural gas. The potential uncontrolled SO_2 emissions from the furnace burner operating at its maximum rated capacity of (43.8 MMBtu/hr) continuously (8,760 hrs/yr) will not exceed the major source threshold of 100 tpy, unless the sulfur content was more than 1,750,000 gr/MMCF (typical pipeline quality natural gas contains less than 2,000 gr/MMCF).

5. *Under Emission Unit Supplemental Information for EU006 and 007, a current fuel analysis should be provided.*

   Please see response to item 4 above.

6. *For Emission Unit 010, we understand that you wish to request 5.94 lbs/hr and 26 ton/yr. Please confirm this.*

   We confirm that we would like to request the emission rates stated as potential emissions from EU 010.

7. *For Emission Unit 012, we cannot open the file at DETAILED DESCRIPTION OF CONTROL EQUIPMENT (tpybvf.pdf). Please verify that the file is attached.*

   A hard copy is provided with this letter.

8. *For Emission Unit 012 and 013, the activities should be grouped into those that qualify for an exemption and those that do not. There is no unregulated category for non-Title V permits. Please provide justification for any pollution controls that are deemed integral to the process. Also, provide specification information related to any pollution control equipment for actitivities found not to qualify for an exemption and where considered not integral to the process.*

PREMIER
CHEMICALS, LLC

State Road 382 North
P.O. Box 160
Port St. Joe
FL 32456
Tel: (850) 227-1167
Fax: (850) 229-6187

Emissions Unit 012 are 013 were meant to be non-exempt emissions units in the FESOP application. Checking "Not Applicable" as instructed in the EPSAP would have resulted in these emissions units being classified as "Exempt." Due to this limitation of the EPSAP software and to distinguish them from the main regulated emissions units, they were classified as unregulated emissions units in the EPSAP application.

Each of the silos in EU 012 are equipped with a bin vent filter, which are dual-purpose process equipment (to minimize product loss as well as to minimize particulate emissions by filtering the displacement air during pneumatic loading of the silo). They are integral in that any silo with any substantial amount of product loss due to unloading emissions would be equipped with a bin vent filter, which must be used during any silo operations resulting in air displacement. Therefore, it is not clear whether they should be considered more like control devices or more like process equipment. We are prepared to accept FDEP's decision on this issue. Specifications for a typical bin vent filter are contained in the "typbvf.pdf" file that could not be opened by the permitting engineer. It is re-attached to this letter.

Please note that the bin vent filters are inspected once per week by an instrument technician (copy of inspection log sheet attached), and also visually checked (for pressure drop anomalies and visible emissions) daily along with the baghouses. In order to assure compliance with any applicable VE limitations, Premier Chemicals proposes to have a VE test performed on each silo (or a representive silo for multiple similar silos) in EU012 at the beginning and end of the permit cycle.

EU 013 consists of fugitive PM emissions due to vehicular traffic at the plant, and handling of dolimatic lime. Per discussions with Mr. Mancarella, fugitive PM emissions due to vehicular traffic (acid trucks, bulk trucks, dolime trucks, and light-duty trucks) will be excluded from EU 013, and will be controlled using reasonable precautions (e.g., speed limit, water sprays as needed). Uncontrolled PM emissions are estimated as follows:

Estimated truck traffic: 50 mi/mo x 12 mo/yr = 600 VMT/yr
Based on AP-42 13.2.2, 12/03,
Emissions (PM30) $= 4.3 \times (10/12)^{0.7} \times (30/3)^{0.45} = 10.67$ lb/VMT
$= 10.67$ lb/VMT x 600 VMT/yr / 2000 lb/ton = 3.2 ton/yr

Uncontrolled PM emissions from dolomitic lime handling operations are estimated as follows:

PREMIER
CHEMICALS, LLC

State Road 382 North
P.O. Box 160
Port St. Joe
FL 32456
Tel: (850) 227-1167
Fax: (850) 229-6187

Unloading (primarily by railcar, but also by truck) of raw dolomitic lime into an underground pit which is partially enclosed and transporting to a 800-ton silo using a screw conveyor and elevator:
0.24 lb/ton (EPA-FIRE, V 6.23, SCC 3-05-011-07) x 25 ton/hr = 6 lb/hr
0.24 lb/ton x 103,000 ton/yr / 2000 lb/ton = 12.4 ton/yr

Two crushers (enclosed):
0.017 lb/ton (AP-42, 11.17, 2/98, SCC 3-05-016-01) x 25 ton/hr = 0.43 lb/hr
0.017 lb/ton x 103,000 ton/yr / 2000 lb/ton = 0.88 tpy

Loading to each of the two 90-ton crushed lime storage silos:
0.16 lb/ton (AP-42, 11/95, SCC 3-05-089-49) x 12.5 ton/hr = 2 lb/hr
0.16 lb/ton x 51,500 ton/yr / 2000 lb/ton = 4.1 tpy

Slaking operations (hydration with recycled process water): Negligible PM emissions

9. *For Emission Unit 013, at Emission Unit Segment Information (SCC 30510405), we calculate the maximum annual rate is based on 4,120 operating hours. We understand that this number of operating hours represents the maximum practical rate for this activity. Please confirm this and provide the most significant limiting factors.*

We confirm that 103,000 ton/yr is the maximum anticipated usage of dolimitic lime. At a maximum unloading rate of 25 ton/hr, this does represent 4,120 hrs/yr. Typically; a 95-ton rail car can be unloaded in about 8 hours or less. Therefore, it is requested that the operating hours of this activity be not limited to 4,120 hrs/yr.

10. *Please confirm if any activities at the facility are subject to 40 CFR 60 Subpart 000 – Standards of Performance for Nonmetallic Mineral Processing Plants.*

The dolomitic handling activities were evaluated with respect to this NSPS. The main products and other raw materials do not meet the definition of "nonmetallic mineral" in 40 CFR 60.671, and are therefore not subject to this regulation. We believe that the dolomitic lime handling activities are also exempt from the NSPS for the following reasons:

a) The facility has been in existence before August 31, 1983.
b) No significant modification or reconstruction has occurred to the lime handling operations since that time.
c) The maximum process rate of the dolime crushers is 25 ton/hour.

PREMIER
CHEMICALS, LLC

State Road 382 North
P.O. Box 160
Port St. Joe
FL 32456
Tel: (850) 227-1167
Fax: (850) 229-6187

11. *Attached is a printout of the Sufficiency Edit/Problem List test run against the submitted permit application. Please review and add information identified as appropriate.*

The sufficiency list generated by the applicant's P.E. using EPSAP at the time of the permit application submittal is completely different from the one attached to your information request letter. Since the application has been submitted, it is in read-only status. As such, the following answers are provided in lieu of revising the EPSAP application.

One of More EUs subject to 'Emissions Guidelines' is a required field.
None of the EUs are subject to the Emissions Guidelines.

EU006/007/010: Compliance Method Code Was Not Selected.
No such codes are available. Instructions state to "Enter a brief description of the method by which compliance with the emissions limitation described on this page would be demonstrated."

EU006/007/010: Compliance Test Frequency Was Not Selected.
No place to select the compliance test frequencies in the application. They should be annual.

EU006/007/010: If Potential Emissions (lb/hr) is Greater than 0, then Emissions Method Must Be Selected.
Emission method code for NOx is "3" (based on AP-42 emission factor).

EU006/007/010: If Valid Flag is yes, then Segment Must be Active.
No place to indicate segment status as active or inactive in the application. Both segments are valid.

EU006/007/010: Regulation is required if VE Basis for Allowable Opacity is "RULE".
Regulation is specified in the Comment section, as instructed.

EU012: If Emission Factor Unit is Selected, then Emission Factor Must Be Greater than Zero. PM and PM10.
Being a grouped emissions unit, multiple emission factors were used. Since only one emission factor per pollutant is allowed in the application, reference was made to the attached file StorageBins.xls

EU012: If Valid Flag is selected, then Segment must be active.
No place to indicate segment status as active or inactive in the application. The segment is valid.

PREMIER
CHEMICALS, LLC

State Road 382 North
P.O. Box 160
Port St. Joe
FL 32456
Tel: (850) 227-1167
Fax: (850) 229-6187

EU013: If Emission Factor Unit is Selected, then Emission Factor Must Be Greater than Zero. PM and PM10.
See answer fro EU012 above. Emission factors for vehicle traffic and dolime handling operations are provided in response to item 8.

EU013: If Valid Flag is Selected, then Segment must be active.
No place to indicate segment status as active or inactive in the application. Valid segments are indicated as such. Please refer to the response to item 8 for a more detailed description of the segments involved.

Per the permitting engineer's request, Premier Chemicals hereby assures that the following retired emissions units cannot become operational again due to missing essential equipment and the lack of power supply to the units;002 (Furnace #3), 008 (Rotary Periclase Kiln), and 011 (Pelletizing Mixers).

As you know, our Title V permit expires on August 2, 2004. We would appreciate any help you can provide so that a FESOP permit can be issued before this date.

Sincerely,

James O Williams

James O. Williams
Plant Manager

Cc: D. N. Hlaing, ECT

Enclosures:
1) UnconfinedPM.doc
2) typbvf.pdf
3) NG_sulfur.tif
4) Copy of BVF Inspection Log

Reasonable Precautions to Prevent Emissions of Unconfined PM
Premier Chemcials, LLC., Port St. Joe, FL

In accordance with Rule 62-296.320(4), F.A.C., Premier Chemicals will take reasonable precautions to prevent or minimize emissions of unconfined particulate matter (PM). The potential sources of unconfined (fugitive) PM sources are identified and grouped in EU013. They include paved and unpaved roads due to vehicle traffic and miscellaneous material lime and other material handling activities which are partially or totally enclosed. The precautions to be taken by Premier Chemicals include the following:

- Application of water to paved and unpaved roads and other plant grounds where vehicles travel, if a visible plume of 10 feet or more from the source is observed.
- Application of water sprinklers as needed
- Use of speed limits on plant property
- Removal of particulate matter from buildings and work areas so that they will not become airborne.
- Enclosing or covering material handling and transfer systems, if feasible and necessary to eliminate or minimize fugitive dust.

C.P. ENVIRONMENTAL FILTERS INC.

March 14, 2003

Daniel Hlaing Fax#: 352-332-6722

Re: **OUTLET EMISSION LEVELS**
Model No. 84-BF-012-C / Premier Chemicals LLC

Dear Mr. Hlaing,

C.P. Environmental Filters can provide an emission guarantee once given the operation parameters of your specific application. Operating characteristics, such as, dust loading, particle size distribution, moisture content, gas volume, and temperature are major factors in determining the efficiency of a dust collector.

In many instances, a pulse jet fabric filter dust collector can attain emission levels of 0.02 GR/ACF and less for particles 2 microns and larger. Once C.P. Environmental Filters has been given the opportunity to review the operating data for you specific application and find that the dust collector selected is adequate, we can provide the following guarantee:

> *"C. P. Environmental Filters warrants that the particulate matter concentration in the effluent gas will not exceed an average of 0.02 grains per actual cubic foot. The guarantee is based on particles 2 microns and larger in diameter, and on the equipment being properly installed and maintained according to standard C. P. Environmental Filters instructions. Effluent testing, if required, will be conducted generally in accordance with the procedures as outlined in Title 40, Part 60 of the Code of Federal Regulations. The effluent test shall not take into consideration condensibles."*

We trust the above meets with your approval. Should you have any questions, please do not hesitate to contact the undersigned.

Sincerely,

C. P. ENVIRONMENTAL FILTERS, INC.

Mark R. Savage

Mark R. Savage
Regional Sales Manager

1336 ENTERPRISE DRIVE • ROMEOVILLE, ILLINOIS 60446 • 630/759-8866 • FAX 630/759-5756

typbvf-pdf

typbvf.pdf

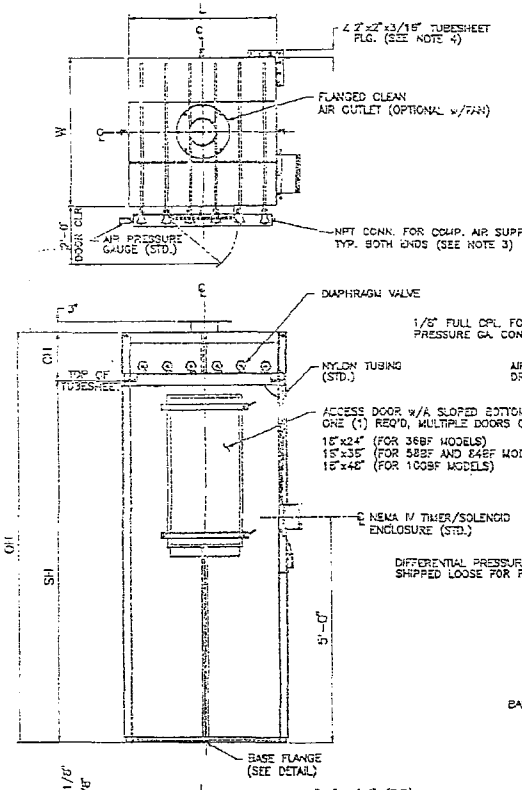

CUSTOMER TO INDICATE MODEL, LOCATION OF COMPONENTS, AND OUTLET SIZE.

MODEL: 58BF009C

OUTLET (A,B,D OR E): ☐ SIZE: ____

ACCESS DOOR (A,B,C OR D): ☐

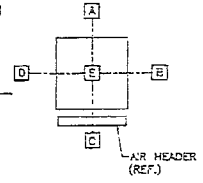

ORIENTATION VIEW & OPTIONS

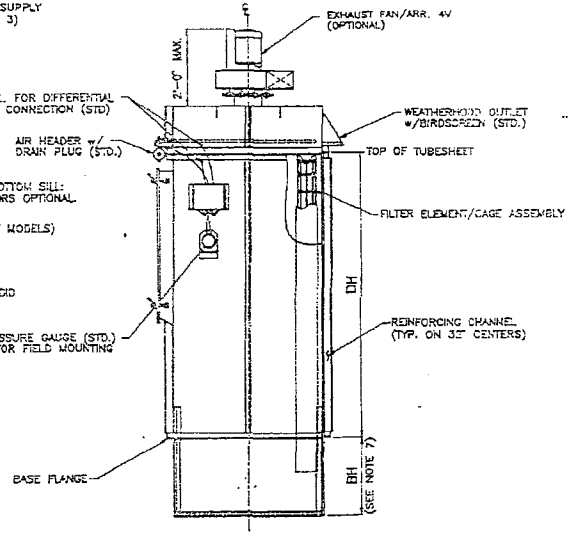

INSERTABLE DESIGN OPTION

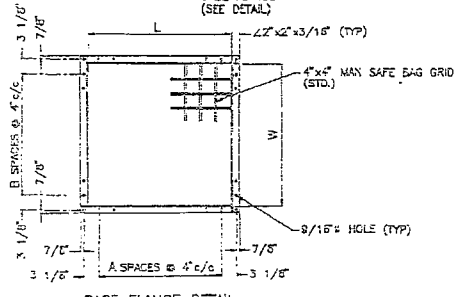

BASE FLANGE DETAIL

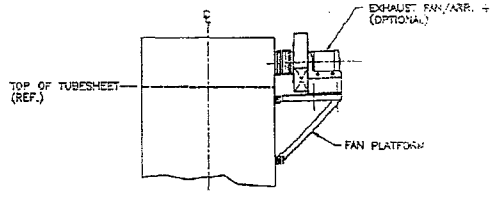

OPTIONAL BLOWER ARRANGEMENT

MODEL	FILTER AREA SQ. FT.	L	W	SH	CH	OH	BH	DH	NO. OF VALVES	COMP. AIR REQ'D (SCFM)	NO. OF SPACES A	NO. OF SPACES B	DIST. CIRCUITS W/ (LBS)
36BF009	41	2'-0"	2'-0"	3'-10"	1'-0"	4'-10"	~	~	3	8	5	5	320
58BF009	66	2'-0"	2'-0"	5'-8"	1'-0"	5'-8"	~	~	3	8	5	5	410
84BF009	95	2'-0"	2'-0"	7'-10"	1'-0"	8'-10"	1'-10"	6'-0"	3	8	5	5	510
36BF012	54	2'-0"	2'-8"	3'-10"	1'-0"	4'-10"	~	~	3	8	5	7	380
58BF012	86	2'-0"	2'-8"	5'-8"	1'-0"	6'-8"	~	~	3	8	5	7	480
84BF012	127	2'-0"	2'-8"	7'-10"	1'-0"	8'-10"	1'-10"	6'-0"	3	8	5	7	605
36BF016	72	2'-8"	2'-8"	3'-10"	1'-2"	5'-0"	~	~	4	8	7	7	475
58BF016	117	2'-8"	2'-8"	5'-8"	1'-2"	6'-10"	~	~	4	8	7	7	600
84BF016	170	2'-8"	2'-8"	7'-10"	1'-2"	9'-0"	1'-10"	6'-0"	4	8	7	7	745
36BF020	90	2'-8"	3'-4"	3'-10"	1'-2"	5'-0"	~	~	4	8	7	9	605
58BF020	146	2'-8"	3'-4"	5'-8"	1'-2"	6'-10"	~	~	4	8	7	9	765
84BF020	212	2'-8"	3'-4"	7'-10"	1'-2"	9'-0"	1'-10"	6'-0"	4	8	7	9	950
36BF025	183	3'-4"	3'-4"	5'-8"	1'-4"	7'-0"	~	~	5	8	9	9	985
84BF025	265	3'-4"	3'-4"	7'-10"	1'-4"	9'-2"	1'-10"	6'-0"	5	8	9	9	1220
58BF030	219	3'-4"	4'-0"	5'-8"	1'-4"	7'-0"	~	~	5	8	9	11	1100
84BF030	318	3'-4"	4'-0"	7'-10"	1'-4"	9'-2"	1'-10"	6'-0"	5	8	9	11	1360
58BF036	263	4'-0"	4'-0"	5'-8"	1'-4"	7'-0"	~	~	6	8	11	11	1280
84BF036	382	4'-0"	4'-0"	7'-10"	1'-4"	9'-2"	1'-10"	6'-0"	6	8	11	11	1570
58BF042	307	4'-0"	4'-8"	5'-8"	1'-4"	7'-0"	~	~	6	8	11	13	1400
84BF042	445	4'-0"	4'-8"	7'-10"	1'-4"	9'-2"	1'-10"	6'-0"	6	8	11	13	1720
58BF049	358	4'-8"	4'-8"	5'-8"	1'-4"	7'-0"	~	~	7	8	13	13	1560
84BF049	518	4'-8"	4'-8"	7'-10"	1'-4"	9'-2"	1'-10"	6'-0"	7	8	13	13	1915
58BF056	409	4'-8"	5'-4"	5'-8"	1'-4"	7'-0"	~	~	7	8	13	15	1695
84BF056	594	4'-8"	5'-4"	7'-10"	1'-4"	9'-2"	1'-10"	6'-0"	7	8	13	15	2080
58BF064	467	5'-4"	5'-4"	5'-8"	1'-4"	7'-0"	~	~	8	8	15	15	1870
84BF064	678	5'-4"	5'-4"	7'-10"	1'-4"	9'-2"	1'-10"	6'-0"	8	8	15	15	2290
58BF072	526	5'-4"	6'-0"	5'-8"	1'-4"	7'-0"	~	~	8	8	15	17	2095
84BF072	753	5'-4"	6'-0"	7'-10"	1'-4"	9'-2"	1'-10"	6'-0"	8	8	15	17	2570
84BF081	594	6'-0"	6'-0"	7'-10"	1'-6"	9'-4"	1'-10"	6'-0"	9	15	17	17	2990
100BF081	1021	6'-0"	6'-0"	9'-2"	1'-6"	10'-8"	3'-2"	6'-0"	9	15	17	17	3315
84BF090	954	6'-0"	6'-8"	7'-10"	1'-6"	9'-4"	1'-10"	6'-0"	9	15	17	19	3440
100BF090	1134	6'-0"	6'-8"	9'-2"	1'-6"	10'-8"	3'-2"	6'-0"	9	15	17	19	3790
84BF100	1060	6'-8"	6'-8"	7'-10"	1'-6"	9'-4"	1'-10"	6'-0"	10	15	19	19	3720
100BF100	1260	6'-8"	6'-8"	9'-2"	1'-6"	10'-8"	3'-2"	6'-0"	10	15	19	19	4095

NOTES:

1) OUTLET SIZE SHALL BE BASED ON RECOMMENDED 3,000 – 4,000 FT/MIN VELOCITY, UNLESS OTHERWISE SPECIFIED.
2) DESIGN PRESSURE ±20"W.G.
3) COMPRESSED AIR REQUIREMENT IS BASED ON CLEAN DRY AIR AT 90–100 PSIG, AND 8–10 SEC. OFF-TIME.
4) MODELS WITH 42 BAGS AND LARGER HAVE EXTERNALLY FLG'D TUBESHEETS.
5) EXTERIOR M.S. SURFACES ARE CLEANED PER SSPC–SP1 (SOLVENT WIPED) AND SSPC–SP3 (POWER TOOL CLEANING) FOLLOWED BY ONE (1) COAT OF RUST INHIBITIVE DIRECT–TO–METAL INDUSTRIAL ENAMEL @ 3–4 MILS D.F.T.
6) SOLENOID VALVES ARE PRE–WIRED TO TIMER AND MOUNTED IN A NEMA IV ENCLOSURE (OTHER ENCLOSURES AVAILABLE).
7) THE INSERTABLE COLLECTOR DESIGN OPTION, AVAILABLE ON UNITS WITH 84" BAGS AND LONGER, MAINTAINS LOW HEADROOM CLEARENCES AND ALLOWS ACCESS TO THE COMPRESSED AIR HEADER ASSEMBLY AND FILTER BAGS FROM THE BASE FLANGE ELEVATION OF THE UNIT.
8) THIS DRAWING TO BE USED FOR GENERAL ARRANGEMENT AND ENGINEERING ONLY, NOT TO BE USED FOR CONSTRUCTION UNLESS CERTIFIED. (OTHER MODELS AVAILABLE)

C.P. ENVIRONMENTAL FILTERS, INC.

SCALE: N.T.S. DRAWN BY: D.A.H.
DATE: 6-19-93 APPROVED BY: [illegible]

THIS DRAWING SUPERCEDES DRAWING NO. PG–104–1

BIN VENT FILTER SERIES
PLANOGRAPH

DWG NUMBER PG–104–2

FGT
Last Updated 5/14/2004 9:00

Station Name	Total Sulfur Previous Day Avg ppm 05/13/2004	Total Sulfur Previous Day Avg Grains/hcf 05/13/2004
Perry 36" Stream #1	1.113	0.070
Perry 30" Stream #2	1.535	0.096
Perry 24" Stream #3	1.576	0.098
Brooker 24" Stream	3.392	0.212

Florida Gas makes no warranty or representation whatsoever as to the accuracy of the
This information is provided on a best efforts basis and is an estimate.
The information is not used for billing purposes.
Florida Gas is not responsible for any reliance on this information by any party.

Stream History

Gas Day	Index	Perry 36" Stream #1 15SA36PSUL.A Avg ppm	Perry 36" Stream #1 Avg Grains/hcf	Perry 30" Stream #2 15SA30PSUL.A Avg ppm	Perry 30" Stream #2 Avg Grains/h
05/12/2004	33	1.185	0.074	1.631	0.102
05/11/2004	32	1.556	0.097	2.014	0.126
05/10/2004	31	1.880	0.117	2.332	0.146
05/09/2004	30	0.926	0.058	1.478	0.092
05/08/2004	29	1.149	0.072	1.734	0.108
05/07/2004	28	1.214	0.076	1.883	0.118
05/06/2004	27	1.201	0.075	1.902	0.119
05/05/2004	26	1.328	0.083	1.967	0.123
05/04/2004	25	1.146	0.072	1.616	0.101
05/03/2004	24	0.977	0.061	1.404	0.088
05/02/2004	23	1.056	0.066	1.764	0.110
05/01/2004	22	1.892	0.118	2.905	0.182
04/30/2004	21	1.281	0.080	2.135	0.133
04/29/2004	20	0.680	0.042	1.292	0.081
04/28/2004	19	0.718	0.045	1.523	0.095
04/27/2004	18	0.466	0.029	0.921	0.058
04/26/2004	17	0.681	0.043	1.390	0.087
04/25/2004	16	1.017	0.064	1.538	0.096
04/24/2004	15	0.965	0.060	1.509	0.094
04/23/2004	14	1.118	0.070	1.775	0.111
04/22/2004	13	1.847	0.115	4.311	0.269
04/21/2004	12	1.667	0.104	3.295	0.206
04/20/2004	11	1.621	0.101	2.806	0.175
04/19/2004	10	0.929	0.058	2.168	0.136
04/18/2004	9	1.111	0.069	2.053	0.128
04/17/2004	8	1.337	0.084	2.530	0.158
04/16/2004	7	1.222	0.076	2.244	0.140
04/15/2004	6	1.258	0.079	2.000	0.125
04/14/2004	5	1.375	0.086	2.134	0.133
04/13/2004	4	1.223	0.076	2.054	0.128
04/12/2004	3	1.283	0.080	2.179	0.136
04/11/2004	2	1.709	0.107	2.845	0.178
04/10/2004	1	1.399	0.087	2.193	0.137

\\gtard-apgc01m\GCUsers\fgt\fgtscada.txt

NG_sulfur.pdf

FGT
Last Updated 6/4/2004 9:00

Station Name	Total Sulfur Previous Day Avg ppm 06/03/2004	Total Sulfur Previous Day Avg Grains/hcf 06/03/2004
Perry 36" Stream #1	1.474	0.092
Perry 30" Stream #2	1.646	0.103
Perry 24" Stream #3	1.695	0.106
Brooker 24" Stream	5.319	0.332

Florida Gas makes no warranty or representation whatsoever as to the accuracy of the info
This information is provided on a best efforts basis and is an estimate.
The information is not used for billing purposes.
Florida Gas is not responsible for any reliance on this information by any party.

Stream History

Gas Day	Index	Perry 36" Stream #1 15SA36PSUL.A Avg ppm	Perry 36" Stream #1 Avg Grains/hcf	Perry 30" Stream #2 15SA30PSUL.A Avg ppm	Perry 30" Stream #2 Avg Grains/hcf	F S 15
06/02/2004	33	2.684	0.168	4.328	0.270	
06/01/2004	32	1.463	0.091	2.153	0.135	
05/31/2004	31	1.309	0.082	1.648	0.103	
05/30/2004	30	1.066	0.067	1.796	0.112	
05/29/2004	29	1.164	0.073	1.970	0.123	
05/28/2004	28	1.088	0.068	1.890	0.118	
05/27/2004	27	1.103	0.069	2.094	0.131	
05/26/2004	26	1.218	0.076	2.078	0.130	
05/25/2004	25	1.133	0.071	1.809	0.113	
05/24/2004	24	2.368	0.148	3.571	0.223	
05/23/2004	23	1.385	0.087	1.942	0.121	
05/22/2004	22	1.691	0.106	2.380	0.149	
05/21/2004	21	0.700	0.044	1.119	0.070	
05/20/2004	20	0.991	0.062	1.617	0.101	
05/19/2004	19	1.163	0.073	1.946	0.122	
05/18/2004	18	1.092	0.068	1.484	0.093	
05/17/2004	17	1.183	0.074	1.817	0.114	
05/16/2004	16	1.109	0.069	1.635	0.102	
05/15/2004	15	0.952	0.059	1.485	0.093	
05/14/2004	14	0.956	0.060	1.481	0.093	
05/13/2004	13	1.113	0.070	1.535	0.096	
05/12/2004	12	1.185	0.074	1.631	0.102	
05/11/2004	11	1.556	0.097	2.014	0.126	
05/10/2004	10	1.880	0.117	2.332	0.146	
05/09/2004	9	0.926	0.058	1.478	0.092	
05/08/2004	8	1.149	0.072	1.734	0.108	
05/07/2004	7	1.214	0.076	1.883	0.118	
05/06/2004	6	1.201	0.075	1.902	0.119	
05/05/2004	5	1.328	0.083	1.967	0.123	
05/04/2004	4	1.146	0.072	1.616	0.101	
05/03/2004	3	0.977	0.061	1.404	0.088	
05/02/2004	2	1.056	0.066	1.764	0.110	
05/01/2004	1	1.892	0.118	2.905	0.182	

\\gtaxd-apgc01m\GCUsers\fgt\fgtscada.txt

NG_sulfur.pdf
ftp://fgt:fgtftp@otsftp.enron.com/fgt/out/fgtscada.txt 6/4/04

Dust Collector Inspections
Frequency: Tuesdays
Department: Instrument

File #	Dust Collector	Cycle Timer Working	Differential Pressure
4966	Main Bagger	✓	1.5
4954	Bulk Bagger	✓	7.5
4917	Magox Main	✓	1.5
4922	B-Bins	✓	6.5
4926	#2 LBB	✓	6
4927	#5 LBB	✓	2
4734	15 & 16 Bins	—	—
4724	Enviro	—	—
4526	Product Bin	✓	5.2

Performed By: D. Neel

Date: 6-8-04

Comments: Blowing to B-bins and #2 LBB

diff.flo

BVF Inspection Log

Curle, Mary Beth

From: Shannon Crane [scrane@premierchemicals.com]
Sent: Tuesday, June 15, 2004 1:16 PM
To: Curle, Mary Beth
Subject: Reply on behalf of James O. Williams

Mary Beth:
We received the letter.

Shannon E. Crane
Process Engineer
Premier Chemicals, LLC
Port St. Joe Operations

FILE COPY

Department of Environmental Protection

Jeb Bush
Governor

Northwest District
160 Governmental Center
Pensacola, Florida 32502

Colleen Castille
Secretary

June 9, 2004

BY ELECTRONIC MAIL
jwilliams@premierchemicals.com
Mr. James Williams
Operations Manager
Premier Chemicals, LLC
Post Office Box 160
Port St. Joe, Florida 32456

Dear Mr. Williams:

This is to acknowledge receipt of your application, file number 0450001-004-AF, for Premier Chemicals, LLC located in Gulf County. This letter constitutes notice that a permit will be required for your project pursuant to Chapter 403, Florida Statutes.

Your application for permit is incomplete. Please provide the information listed below. Evaluation of your proposed project will be delayed until all requested information has been received.

1. Under the Facility Supplemental Information Section, PRECAUTIONS TO PREVENT EMISSIONS OF UNCONFINED PARTICULATE MATTER has not been attached. Please provide a current version of this attachment.

2. For both Emissions Units 006 and 007, at EU Pollutant Allowable Information Section– Particulate Matter, we understand that you wish to request 3.26 lbs/hr and 14.3 tons/yr. Please confirm this.

3. For both Emissions Units 006 and 007, at Emission Unit Pollutant Information Section – PM10, PM10 is shown as EL. We believe this should be shown as NS. Please confirm this.

4. For both Emissions Units 006 and 007, for SO_2 please provide a pollutant regulatory code.

5. Under Emission Unit Supplemental Information for EU006 and 007, a current fuel analysis should be provided.

6. For Emission Unit 010, we understand that you wish to request 5.94 lbs/hr and 26 tons/yr. Please confirm this.

7. For Emission Unit 012, we cannot open the file at DETAILED DESCRIPTION OF CONTROL EQUIPMENT (typbvf.pdf). Please verify that the file is attached.

8. For Emission Units 012 and 013, the activities should be grouped into those that qualify for an exemption and those that do not. There is no unregulated category for non-Title V permits. Please provide justification for any pollution controls that are deemed integral to the process. Also, provide specification information related to any pollution control equipment for activities found not to qualify for an exemption and where considered not integral to the process.

9. For Emission Unit 013, at Emission Unit Segment Information (SCC 30510405), we calculate that the maximum annual rate is based on 4,120 operating hours. We understand that this number of operating hours represents the maximum practical rate for this activity. Please confirm this and provide the most significant rate limiting factors.

10. Please confirm if any activities at the facility are subject to 40 CFR 60 Subpart OOO - Standards of Performance for Nonmetallic Mineral Processing Plants.

11. Attached is a printout of the Sufficiency Edit/Problem List test run against the submitted permit application. Please review and add the information identified as appropriate.

When referring to this project, please use the file number indicated above. If you have any questions, please contact Owen Mancarella at 850/595-8364, extension 1232 or owen.mancarella@dep.state.fl.us. It is possible to reply to this letter by mouse clicking Ms. Veazey's email address below.

Sincerely,

Sandra F. Veazey
Air Program Administrator

SFV:omc
Encl: Sufficiency Edit
cc: Daniel Hlaing, Environmental Consulting (dnhlaing@ectinc.com)
DEP NWD Branch Office, Panama City (richard.brookins@dep.state.fl.us)

SUFFICIENCY EDIT

EU ID	EU Description	Problem Description	Suggested Solution
		'One or More EUs Subject to Emission Guidelines' is a Required Field	Please Select 'Yes' or 'No' for 'One or More EUs Subject to Emission Guidelines'
006	MULTI HEARTH FURNACE NO. 1	Compliance Method Code Was Not Selected	Select Compliance Method Code
006	MULTI HEARTH FURNACE NO. 1	Compliance Test Frequency Was Not Selected	Select Compliance Test Frequency
006	MULTI HEARTH FURNACE NO. 1	If Potential Emissions (lb/hour) is Greater than 0, then Emissions Method Must be Selected	Select an Emissions Method for EU Pollutant: NOX
006	MULTI HEARTH FURNACE NO. 1	If Valid Flag is Yes, then Segment Must be Active	Update Segment Status to Active or Set Valid Flag to No
006	MULTI HEARTH FURNACE NO. 1	Regulation is Required if VE Basis for Allowable Opacity is 'RULE'	Enter a Regulation for this Visible Emissions
007	MULTI HEARTH FURNACE NO. 2	Compliance Method Code Was Not Selected	Select Compliance Method Code
007	MULTI HEARTH FURNACE NO. 2	Compliance Test Frequency Was Not Selected	Select Compliance Test Frequency
007	MULTI HEARTH FURNACE NO. 2	If Potential Emissions (lb/hour) is Greater than 0, then Emissions Method Must be Selected	Select an Emissions Method for EU Pollutant NOX
007	MULTI HEARTH FURNACE NO. 2	If Valid Flag is Yes, then Segment Must be Active	Update Segment Status to Active or Set Valid Flag to No
007	MULTI HEARTH FURNACE NO. 2	Regulation is Required if VE Basis for Allowable Opacity is 'RULE'	Enter a Regulation for this Visible Emissions
010	MAGNESIUM OXIDE GRINDING	Compliance Method Code Was Not Selected	Select Compliance Method Code
010	MAGNESIUM OXIDE GRINDING	Compliance Test Frequency Was Not Selected	Select Compliance Test Frequency
010	MAGNESIUM OXIDE GRINDING	If Valid Flag is Yes, then Segment Must be Active	Update Segment Status to Active or Set Valid Flag to No
012	MISCELLANEOUS ACTIVITIES NOT SUBJECT TO PROCESS WEIGHT TABLE	If Emission Factor Unit is Selected, then Emission Factor Must be Greater than Zero	Enter an Emission Factor for EU Pollutant: PM
012	MISCELLANEOUS ACTIVITIES NOT SUBJECT TO PROCESS WEIGHT TABLE	If Emission Factor Unit is Selected, then Emission Factor Must be Greater than Zero	Enter an Emission Factor for EU Pollutant: PM10
012	MISCELLANEOUS ACTIVITIES NOT SUBJECT TO PROCESS WEIGHT TABLE	If Valid Flag is Yes, then Segment Must be Active	Update Segment Status to Active or Set Valid Flag to No
013	UNCONTROLLED FUGITIVE PARTICULATE ACTIVITIES	If Emission Factor Unit is Selected, then Emission Factor Must be Greater than Zero	Enter an Emission Factor for EU Pollutant: PM
013	UNCONTROLLED FUGITIVE PARTICULATE ACTIVITIES	If Emission Factor Unit is Selected, then Emission Factor Must be Greater than Zero	Enter an Emission Factor for EU Pollutant: PM10
013	UNCONTROLLED FUGITIVE PARTICULATE ACTIVITIES	If Valid Flag is Yes, then Segment Must be Active	Update Segment Status to Active or Set Valid Flag to No
013	UNCONTROLLED FUGITIVE PARTICULATE ACTIVITIES	If Valid Flag is Yes, then Segment Must be Active	Update Segment Status to Active or Set Valid Flag to No

23 Errors Found as of 6/8/2004 3:32:08 PM