```
 _perMits_|__Events_|__Payment_|__Facility_|__partY_|__Reports_|__Help_|__eXit_
-------------------------  _Permitting_Application_  -------------------------
+------------------------------- ARMS Facility -------------------------------+
| Facility Name: PREMIER_SERVICES_CORPORATION_________  AIRS ID: 0450001      |
| County: GULF_________          Owner: PREMIER_SERVICES_CORPORATION___________|
| Office: NW_Br:_PANAMA_CITY___________      Category: POINT                    |
+---------------------------------- Project ----------------------------------+
|AIR Permit #: _______-___-__       Project #: 001  CRA Reference #: __________|
| Permit Office: NWD_(DISTRICT)_____________________   Agency Action: Pending___|
| Project Name: PREMIER_SERVICES_CORP._________ Desc: Dust_Collectors___________|
| Type/Sub/Req: AC__/1F_ Source_less_than_5_tpy_$250________ Logged: 06-AUG-1996|
|    Received: 06-AUG-1996_      Issued: _____________      Expires: _____________|
|Fee: ____250.00 Realized: __________ Dele: _________ Override: NONE___________|
+------------------------------- Related Party -------------------------------+
|Role: APPLICANT_______   Begin: 06-AUG-1996   End: ___________               |
| Name: PREMIER_SERVICES_CORP._____________________________ SSN/FEID: Unavailable|
| Addr: SR_382_N._____________________________________________________________|
| City: PORT_ST._JOE_________________ State: FL Zip: 32456-____ Country: U.S.A._|
| Phone: 904-227-1167   Fax: 904-227-6187                                     |
+---------------------------------- Processors -------------------------------+
|Processor: SARASUA_A_______________ Y Active: 06-AUG-1996 Inactive: ___________|
+-----------------------------------------------------------------------------+
Enter_Project_Name._____________________________________________________________
Count: *2          ^                                                  <Replace>
```

```
AREA: NWD_______          Cash Receiving Application                    CRAF006A
                       Collection Point Log Remittance      Tot: _______$7,350.00
+-----------------------------------------------------------------------------+
! SYS$REMT: 128612__ Type: C_____    Recved Date: 06-AUG-1996  Status: RECEIVED !
! SYS$RCPT: 98769___ PNR: _________ Check #: 062250____  Amount: _________250.00 !
! SSN/FEI#: __________              Name: PREMIER_SERVICES_CORP._________      !
!    First: ______________________ Middle: ______ Title:_________ Suf: ______  !
! Address1: 901_EAST_EIGHTH_AVE._____________________ Short Comments:          !
! Address2: ________________________________________ JR_AC_____________________ !
!     City: KING_OF_PRUSSIA_____ ST: PA  Zip: 19406-____ Country: __________  !
+-----------------------------------------------------------------------------+
+-----------------------------> P A Y M E N T (S) <-----------------------------+
!          Distr                                                          S   !
!          CL      Object                    Payment                      T   !
!SYS$PAYT  Area..  Code/Description.....:    Amount........ Reference#  A   !
!131978__  NWD___  002222 AIR_CONSTRUCT__   ________$250.00 0450001001 ARM PFTF__ CO !
!_________ ______  ______ ________________   _______________ __________ ___ ______ __ !
!_________ ______  ______ ________________   _______________ __________ ___ ______ __ !
!_________ ______  ______ ________________   _______________ __________ ___ ______ __ !
!_________ ______  ______ ________________   _______________ __________ ___ ______ __ !
+-----------------------------------------------------------------------------+
 COMMIT FREQUENTLY                        _________$250.00  Payment total
Press_<TAB>_to_accept_Collection_Point_or_enter_F&A._____________________________
Count: *9          ^                                                  <Replace>
```

Florida Department of Environmental Regulation
Twin Towers Office Bldg. • 2600 Blair Stone Road • Tallahassee, Florida 32399-2400

# Permit Data Form

DATE: 8-6-96

Project Source Name: Premier Services

Type Code: AC Subcode: IF Check if: ☐ GP ☐ Exempt

Correct Fee: 250.00

Amount Received: 250.00

Permit Processor's Initial: AIS Data Entry Operator's Initial: AO

Amount Refund: _____

Comments:

A. S. Allen

Andy Allen. Please check for fee.

0450001 001 AC

001

AMERICAN PREMIER, INC.

901 East Eighth Avenue
King of Prussia, PA 19406
Phone: (610) 337-1100
Fax: (610) 337-1111

98769

0450001

July 24, 1996

Mr. Ed Middleswart, Air Administrator
State of Florida
Department of Environmental Protection
Air Section, Northwest District
160 Governmental Center
Pensacola, Florida 32501-5794

**RE: Application for Air Permit**
**Premier Services Corp.**
**Port St. Joe Facility**

Dear Mr. Middleswart:

Please find attached an original copy of an air permit application (application) to obtain a permit to construct a bin vent filter at Premier Services Corp. (PSC). You also will find attached a check in the amount of $250 payable to the State of Florida for the application fee.

PSC is located on State Road 382-North in Port St. Joe Florida and manufactures magnesia products for use in a number of applications, typically fertilizers. This particular bin vent filter will be used to control emissions from a 175 ton storage bin.

Be advised that the above mentioned bin vent filter was addressed as a future unit in the Title V permit application submitted June, 1996. The request to have this unit incorporated as part of the Title V permit is described in further detail within the body of this application. As a result, an addendum to the Title V application should not be required after this construction permit is issued. However, it is requested that the construction permit state that its terms and conditions will be included into the Title V permit when issued.

If you have any questions or comments regarding this application, please contact me at your earliest convenience at (610) 337-1100, ext. 558.

Sincerely,

Thomas F. Turpin
Corporate Environmental Manager

RECEIVED
AUG 6 1996
Northwest Florida
DEP

cc: Steve Becker, KOP
Ron Olsen, ERM-South, Inc.
Jim Williams, Port St. Joe

001

# Department of Environmental Protection

## DIVISION OF AIR RESOURCES MANAGEMENT

98769 APPLICATION FOR AIR PERMIT - LONG FORM 0450001

## I. APPLICATION INFORMATION

**Identification of Facility Addressed in This Application**

| | |
|---|---|
| 1. Facility Owner/Company Name :<br>Premier Services Corporation | |
| 2. Site Name :<br>Port St. Joe Facility | |
| 3. Facility Identification Number : 0450001 | [ ] Unknown |
| 4. Facility Location :<br>Premier Services Corporation<br>Port St. Joe Facility<br>State Road 382-North<br>Port St. Joe Facility 32456<br><br>Street Address or Other Locator : State Road 382-North<br>City : Port St Joe County : Gulf Zip Code : 32456- | |
| 5. Relocatable Facility?<br>[ ] Yes [X] No | 6. Existing Permitted Facility?<br>[X] Yes [ ] No |

James O Williams
Operations Mgr.
(904) 227-1167



DEP Form No. 62-210.900(1) - Form
Effective : 3-21-96

RECEIVED
AUG 6 1996
Northwest Florida
DEP

**Owner/Authorized Representative or Responsible Official**

1. Name and Title of Owner/Authorized Representative or Responsible Official :

Name : James O. Williams
Title : Operations Manager

2. Owner or Authorized Representative or Responsible Official Mailing Address :

Organization/Firm : Premier Services Corporation
Street Address : State Road 382-North
City : Port St Joe
State : FL Zip Code : 32456-

3. Owner/Authorized Representative or Responsible Official Telephone Numbers :

Telephone : (904)227-1167 Fax : (904)227-6187

4. Owner/Authorized Representative or Responsible Official Statement :

*I, the undersigned, am the owner or authorized representative* of the non-Title V source addressed in this Application for Air Permit or the responsible official, as defined in Rule 62-210.200, F.A.C., of the Title V source addressed in this application, whichever is applicable. I hereby certify, based on information and belief formed after reasonable inquiry, that the statements made in this application are true, accurate and complete and that, to the best of my knowledge, any estimates of emissions reported in this application are based upon reasonable techniques for calculating emissions. The air pollutant emissions units and air pollution control equipment described in this application will be operated and maintained so as to comply with all applicable standards for control of air pollutant emissions found in the statutes of the State of Florida and rules of the Department of Environmental Protection and revisions thereof. I understand that a permit, if granted by the Department, cannot be transferred without authorization from the Department, and I will promptly notify the Department upon sale or legal transfer of any permitted emissions units.*

James O Williams
Signature

7/31/96
Date

* Attach letter of authorization if not currently on file.

## Scope of Application

| Emissions Unit ID | Description of Emissions Unit | Permit Type |
|---|---|---|
| EU-09 | Dust Collectors | AC1F |

**Purpose of Application and Category**

Category I : All Air Operation Permit Applications Subject to Processing Under Chapter 62-213, F.A.C.

This Application for Air Permit is submitted to obtain :

[ ] Initial air operation permit under Chapter 62-213, F.A.C., for an existing facility which is classified as a Title V source.

[ ] Initial air operation permit under Chapter 62-213, F.A.C., for a facility which, upon start up of one or more newly constructed or modified emissions units addressed in this application, would become classified as a Title V source.

Current construction permit number :

[ ] Air operation permit renewal under Chapter 62-213, F.A.C., for a Title V source.

Operation permit to be renewed :

[ ] Air operation permit revision for a Title V source to address one or more newly constructed or modified emissions units addressed in this application.

Current construction permit number :

Operation permit to be revised :

[ ] Air operation permit revision or administrative correction for a Title V source to address one or more proposed new or modified emissions units and to be processed concurrently with the air construction permit application.

Operation permit to be revised/corrected :

[ ] Air operation permit revision for a Title V source for reasons other than construction or modification of an emissions unit.

Operation permit to be revised :

Reason for revision :

Category II : All Air Operation Permit Applications Subject to Processing Under Rule 62-210.300(2)(b), F.A.C.

This Application for Air Permit is submitted to obtain :

[ ] Initial air operation permit under Rule 62-210.300(2)(b), F.A.C., for an existing facility seeking classification as a synthetic non-Title V source.

Current operation/construction permit number(s) :

[ ] Renewal air operation permit under Fule 62-210.300(2)(b), F.A.C., for a synthetic non-Title V source.

Operation permit to be renewed :

[ ] Air operation permit revision for a synthetic non-Title V source.

Operation permit to be revised :

Reason for revision :

Category III : All Air Construction Permit Applications for All Facilities and Emissions Units

This Application for Air Permit is submitted to obtain :

[ X ] Air construction permit to construct or modify one or more emissions units within a facility (including any facility classified as a Title V source).

Current operation permit number(s), if any :
A023-188484

[ ] Air construction permit to make federally enforceable an assumed restriction on the potential emissions of one or more existing, permitted emissions units.

Current operation permit number(s) :

[ ] Air construction permit for one or more existing, but unpermitted, emissions units.

## Application Processing Fee

Check one :

[X] Attached - Amount : $250.00 [ ] Not Applicable.

## Construction/Modification Information

| | |
|---|---|
| 1. Description of Proposed Project or Alterations : Install one (1) C.P. Environmental Filters, Inc. Model #84BF025 bin vent filter on a 175 ton bin that is being used to store MgO and Mg(OH2). The bin vent filter will be used to control particulate emissions generated in the bin and associated elevator. Air flow through the bin vent filter will be supplied by a New York Model #5HP146 fan and motor. A copy of the specifications and drawings of fan, motor, and filter is attached as Attachment F. | |
| 2. Projected or Actual Date of Commencement of Construction : | 01-Nov-1996 |
| 3. Projected Date of Completion of Construction : | 01-Dec-1996 |

## Professional Engineer Certification

| | |
|---|---|
| 1. Professional Engineer Name : Robert W. Fox, P.E.<br>Registration Number : 40980 | |
| 2. Professional Engineer Mailing Address :<br>Organization/Firm : ERM-South, Inc.<br>Street Address : 9501 Princess Palm Ave., 100<br>City : Tampa | State : FL Zip Code : 33619-____ |
| 3. Professional Engineer Telephone Numbers :<br>Telephone : (813)622-8727 | Fax : (813)621-8504 |

Premier Services Corp.

4. Professional Engineer Statement :

*I, the undersigned, hereby certified, except as particularly noted herein*, that :*

*(1) To the best of my knowledge, there is reasonable assurance that the air pollutant emissions unit(s) and the air pollutant control equipment described in this Application for Air Permit, when properly operated and maintained, will comply with all applicable standards for control of air pollutant emissions found in the Florida Statutes and rules of the Department of Environmental Protection; and*

*(2) To the best of my knowledge, any emission estimates reported or relied on in this application are true, accurate, and complete and are either based upon reasonable techniques available for calculating emissions or, for emission estimates of hazardous air pollutants not regulated for an emissions unit addressed in this application, based solely upon the materials, information and calculations submitted with this application.*

*If the purpose of this application is to obtain a Title V source air operation permit (check here [ ] if so), I further certify that each emissions unit described in this Application for Air Permit, when properly operated and maintained, will comply with the applicable requirements identified in this application to which the unit is subject, except those emissions units for which a compliance schedule is submitted with this application.*

*If the purpose of this application is to obtain an air construction permit for one or more proposed new or modified emissions units (check here [ ] if so), I further certify that the engineering features of each such emissions unit described in this application have been designed or examined by me or individuals under my direct supervision and found to be in conformity with sound engineering principles applicable to the control of emissions of the air pollutants characterized in this application.*

*If the purpose of this application is to obtain an initial air operation permit or operation permit revision for one or more newly constructed or modified emissions units (check here [ ] if so), I further certify that, with the exception of any changes detailed as part of this application, each such emissions has been constructed or modified in substantial accordance with the information given in the corresponding application for air construction permit and with all provisions contained in such permit.*

Robert L. Fox
Signature #40980

Date 7/30/96

* Attach any exception to certification statement.

## Application Contact

| | |
|---|---|
| 1. Name and Title of Application Contact : | |
| Name : | James O. Williams |
| Title : | Operations Manager |
| 2. Application Contact Mailing Address : | |
| Organization/Firm : | Premier Services Corporation |
| Street Address : | P.O. Box 160 |
| City : | Port St Joe |
| State : | FL Zip Code : 32456- |
| 3. Application Contact Telephone Numbers : | |
| Telephone : | (904)227-1167 Fax : (904)227-6187 |

## Application Comment

Premier Services Corporation (PSC) is submitting this application to construct the above described unit. As described in the Title V Operation Permit application for the facility, there are other dust collectors at the facility, only one of which is permitted as its own emission unit (filter building dust collector). The other dust collectors are temporarily exempt from permitting under Florida rules until issuance of the Title V permit. All of the permitted and unpermitted collectors are be grouped into a new emission unit in the Title V permit application. This proposed dust collector was included as part of this group.

## II. FACILITY INFORMATION

## A. GENERAL FACILITY INFORMATION

**Facility, Location, and Type**

| | | | |
|---|---|---|---|
| 1. Facility UTM Coordinates :<br>Zone : 16 East (km) : 664.20 North (km) : 3302.10 | | | |
| 2. Facility Latitude/Longitude :<br>Latitude (DD/MM/SS) : Longitude (DD/MM/SS) : | | | |
| 3. Governmental Facility Code :<br>0 | 4. Facility Status Code :<br>A | 5. Facility Major Group SIC Code :<br>28 | 6. Facility SIC(s) :<br>2819 |
| 7. Facility Comment :<br>None | | | |

**Facility Contact**

| |
|---|
| 1. Name and Title of Facility Contact :<br>James O. Williams<br>Operations Manager |
| 2. Facility Contact Mailing Address :<br>Organization/Firm : Premier Services Corporation<br>Street Address : State Road 382-North<br>City : Port St. Joe State : FL Zip Code : 32456-____ |
| 3. Facility Contact Telephone Numbers :<br>Telephone : (904)227-1167 Fax : (904)227-6187 |

**Facility Regulatory Classifications**

| | |
|---|---|
| 1. Small Business Stationary Source? | N |
| 2. Title V Source? | Y |
| 3. Synthetic Non-Title V Source? | N |
| 4. Major Source of Pollutants Other than Hazardous Air Pollutants (HAPs)? | Y |
| 5. Synthetic Minor Source of Pollutants Other than HAPs? | N |
| 6. Major Source of Hazardous Air Pollutants (HAPs)? | N |
| 7. Synthetic Minor Source of HAPs? | N |
| 8. One or More Emissions Units Subject to NSPS? | N |
| 9. One or More Emission Units Subject to NESHAP? | N |
| 10. Title V Source by EPA Designation? | N |
| 11. Facility Regulatory Classifications Comment :<br>None | |

## B. FACILITY REGULATIONS

**Rule Applicability Analysis**

| |
|---|
| Not Applicable |

## B. FACILITY REGULATIONS

**List of Applicable Regulations**

See Attachment A Applicable Requirements

## C. FACILITY POLLUTANTS

**Facility Pollutant Information**

| 1. Pollutant Emitted | 2. Pollutant Classification |
|---|---|
| PM | A |
| PM10 | A |
| NOX | A |

## D. FACILITY SUPPLEMENTAL INFORMATION

**Supplemental Requirements for All Applications**

| | |
|---|---|
| 1. Area Map Showing Facility Location : | Attachment B |
| 2. Facility Plot Plan : | Attachment C |
| 3. Process Flow Diagram(s) : | Attachment D |
| 4. Precautions to Prevent Emissions of Unconfined Particulate Matter : | NA |
| 5. Fugitive Emissions Identification : | Attachment E |
| 6. Supplemental Information for Construction Permit Application : | Attachment F |

**Additional Supplemental Requirements for Category I Applications Only**

| | |
|---|---|
| 7. List of Proposed Exempt Activities : | NA |
| 8. List of Equipment/Activities Regulated under Title VI : | NA |
| 9. Alternative Methods of Operation : | NA |
| 10. Alternative Modes of Operation (Emissions Trading) : | NA |
| 11. Identification of Additional Applicable Requirements : | |
| 12. Compliance Assurance Monitoring Plan : | NA |
| 13. Risk Management Plan Verification : | NA |
| 14. Compliance Report and Plan : | NA |
| 15. Compliance Certification (Hard-copy Required) : | NA |

## III. EMISSIONS UNIT INFORMATION

### A. TYPE OF EMISSIONS UNIT
### (Regulated and Unregulated Emissions Units)

**Emissions Unit Information Section** 1

Dust Collectors

**Type of Emissions Unit Addressed in This Section**

1. Regulated or Unregulated Emissions Unit? Check one :

[ X ] The emissions unit addressed in this Emissions Unit Information Section is a regulated emissions unit.

[ ] The emissions unit addressed in this Emissions Unit Information Section is an unregulated emissions unit.

2. Single Process, Group of Processes, or Fugitive Only? Check one :

[ ] This Emissions Unit Information Section addresses, as a single emissions unit, a single process or production unit, or activity, which produces one or more air pollutants and which has at least one definable emission point (stack or vent).

[ X] This Emissions Unit Information Section addresses, as a single emissions unit, a group of process or production units and activities which has at least one definable emission point (stack or vent) but may also produce fugitive emissions.

[ ] This Emissions Unit Information Section addresses, as a single emissions unit, one or more process or production units and activities which produce fugitive emissions only.

**Emissions Unit Information Section** 1

## B. GENERAL EMISSIONS UNIT INFORMATION
## (Regulated and Unregulated Emissions Units)

**Emissions Unit Description and Status**

| | | |
|---|---|---|
| 1. Description of Emissions Unit Addressed in This Section :<br><br>Dust Collectors | | |
| 2. Emissions Unit Identification Number : EU-09<br>[ ] No Corresponding ID [ ] Unknown | | |
| 3. Emissions Unit Status Code : A | 4. Acid Rain Unit?<br>[ ] Yes [X] No | 5. Emissions Unit Major Group SIC Code : 28 |
| 6. Emissions Unit Comment :<br><br>This application addresses one proposed new dust collector. It will be in addition to 7 existing dust collectors (which vent to the atmosphere) at the Port St. Joe facility. The recently filed Title V application addresses all 8 dust collectors as a single emissions unit (EU-09). | | |

**Emissions Unit Information Section** 1
Dust Collectors

**Emissions Unit Control Equipment** 1

| |
|---|
| 1. Description :<br><br>Bin vent dust collector - Finished Product Bins 1 and 2. |
| 2. Control Device or Method Code : 18 |

## C. EMISSIONS UNIT DETAIL INFORMATION
## (Regulated Emissions Units Only)

**Emissions Unit Information Section** 1
Dust Collectors

**Emissions Unit Details**

| | |
|---|---|
| 1. Initial Startup Date : | 01-Dec-1996 |
| 2. Long-term Reserve Shutdown Date : | |
| 3. Package Unit :<br>Manufacturer : C.P. Environmental Filter, Inc. | Model Number : 84BR025 bin vent |
| 4. Generator Nameplate Rating : | MW |
| 5. Incinerator Information :<br>Dwell Temperature :<br>Dwell Time :<br>Incinerator Afterburner Temperature : | <br>Degrees Fahrenheit<br>Seconds<br>Degrees Fahrenheit |

**Emissions Unit Operating Capacity**

| | | |
|---|---|---|
| 1. Maximum Heat Input Rate : | mmBtu/hr | |
| 2. Maximum Incinerator Rate : | lb/hr | tons/day |
| 3. Maximum Process or Throughput Rate : | 20 | tons/hour |
| 4. Maximum Production Rate : | | |
| 5. Operating Capacity Comment :<br>The throughput rates for various handling operations that are equipped with dust collectors varies among operations. The above rate is for the storage bin with the proposed dust collector. | | |

**Emissions Unit Operating Schedule**

| | |
|---|---|
| Requested Maximum Operating Schedule : | |
| 24 hours/day | 7 days/week |
| 52 weeks/year | 8,760 hours/year |

## D. EMISSIONS UNIT REGULATIONS
## (Regulated Emissions Units Only)

**Emissions Unit Information Section** 1

Dust Collectors

**Rule Applicability Analysis**

| |
|---|
| Not Applicable |

**Emissions Unit Information Section** 1
Dust Collectors

## List of Applicable Regulations

See Attachment A Applicable Requirments

## E. EMISSION POINT (STACK/VENT) INFORMATION

Emissions Unit Information Section 1

Dust Collectors

Emission Point Description and Type :

| | | |
|---|---|---|
| 1. Identification of Point on Plot Plan or Flow Diagram : | See Attach. C EU-09 | |
| 2. Emission Point Type Code : | 1 | |
| 3. Descriptions of Emission Points Comprising this Emissions Unit for VE Tracking : (limit to 100 characters per point) The emissions point will consist of a single 8" exhaust port for the 175 bin used to store MgO and Mg | | |
| 4. ID Numbers or Descriptions of Emission Units with this Emission Point in Common : Not applicable | | |
| 5. Discharge Type Code : | H | |
| 6. Stack Height : | 50 | feet |
| 7. Exit Diameter : | 0.7 | feet |
| 8. Exit Temperature : | 180 | °F |
| 9. Actual Volumetric Flow Rate : | 1100 | acfm |
| 10. Percent Water Vapor : | | % |
| 11. Maximum Dry Standard Flow Rate : | — | dscfm |
| 12. Nonstack Emission Point Height : | | feet |
| 13. Emission Point UTM Coordinates : Zone : 16 East (km) : 664.200 North (km) : 3302.100 | | |
| 14. Emission Point Comment : The emission point described above is for the proposed dust collector vent. Vents for other dust collectors will have different parameters. | | |

## F. SEGMENT (PROCESS/FUEL) INFORMATION

**Emissions Unit Information Section** 1

Dust Collectors

**Segment Description and Rate :** Segment 1

| | |
|---|---|
| 1. Segment Description (Process/Fuel Type and Associated Operating Method/Mode) :<br>Material Handling-Filling of bins with the MgO and Mg(OH)2 | |
| 2. Source Classification Code (SCC) : 3-05-999-99 | |
| 3. SCC Units : Tons Processed | |
| 4. Maximum Hourly Rate : 19.50 | 5. Maximum Annual Rate : 170,820.00 |
| 6. Estimated Annual Activity Factor : 0.00 | |
| 7. Maximum Percent Sulfur : | 8. Maximum Percent Ash : |
| 9. Million Btu per SCC Unit : | |
| 10. Segment Comment :<br>The process throughput rate shown above represents the maximum throughput for the finished product bins 1 and 2, only. | |

## G. EMISSIONS UNIT POLLUTANTS
## (Regulated and Unregulated Emissions Units)

**Emissions Unit Information Section** 1
Dust Collectors

| 1. Pollutant Emitted | 2. Primary Control Device Code | 3. Secondary Control Device Code | 4. Pollutant Regulatory Code |
|---|---|---|---|
| 1 - PM | 018 | | NS |
| 2 - PM10 | 018 | | NS |

## H. EMISSIONS UNIT POLLUTANT DETAIL INFORMATION
**(Regulated Emissions Units Only - Emissions Limited Pollutants Only)**

**Emissions Unit Information Section** 1
Dust Collectors

**Pollutant Potential/Estimated Emissions :** Pollutant 1

| |
|---|
| 1. Pollutant Emitted : **PM** |
| 2. Total Percent Efficiency of Control : 99.00 % |
| 3. Potential Emissions : 0.02 lb/hour 0.10 tons/year |
| 4. Synthetically Limited? [ ] Yes [X ] No |
| 5. Range of Estimated Fugitive/Other Emissions: to tons/year |
| 6. Emissions Factor : Reference : AP-49, Ch. 11.24 |
| 7. Emissions Method Code : 4 |
| 8. Calculations of Emissions : 19.5 tons/hr(max. oper. cap.)x0.12lbs/tons prod.x(1-0.99)=0.0234lbs/hr<br>19.5 tons/hr(max. oper. cap.)x0.12lbs/tons prod.x(1-0.99) x 8760hrs.x<br>1 ton/2000lbs.=0.103tons/yr. |
| 9. Pollutant Potential/Estimated Emissions Comment : The EPA AP-42 document discusses processes and emissions generated by selected manufacturing operations, and provides emission factors for various activities. The magnesium processing conducted at the PSC facility is not addressed specifically in AP-42. However, the equipment and activities of other material processing, such as metallic minerals processing (Ch. 11.24) are similar to those of the PSC operations. Therefore, the appropriate AP-42 emission factors for these other facilities were applied to the PSC operations. The emission estimates shown above represent emission factors from the finished product bins 1 and 2 dust collector vents, only. |

## H. EMISSIONS UNIT POLLUTANT DETAIL INFORMATION
**(Regulated Emissions Units Only - Emissions Limited Pollutants Only)**

**Emissions Unit Information Section** 1

Dust Collectors

## H. EMISSIONS UNIT POLLUTANT DETAIL INFORMATION
**(Regulated Emissions Units Only - Emissions Limited Pollutants Only)**

**Emissions Unit Information Section** 1
Dust Collectors

**Pollutant Potential/Estimated Emissions :** Pollutant 2

| |
|---|
| 1. Pollutant Emitted : **PM10** |
| 2. Total Percent Efficiency of Control : 99.00 % |
| 3. Potential Emissions : 0.01 lb/hour 0.05 tons/year |
| 4. Synthetically Limited? [ ] Yes [X ] No |
| 5. Range of Estimated Fugitive/Other Emissions: to tons/year |
| 6. Emissions Factor : Reference : AP-42, Ch. 11.24 |
| 7. Emissions Method Code : 4 |
| 8. Calculations of Emissions : 19.5 tons/hr(max. oper. cap.)x0.06 lbs/tons prod.x(1-0.99)=0.0117lbs/hr 19.5 tons/hr(max. oper. cap.)x0.06 lbs/tons prod.x(1-0.99)x8760 hrs/yr x 1 ton/2000 lbs.=0.051 tons/yr. |
| 9. Pollutant Potential/Estimated Emissions Comment : The EPA AP-42 document discusses processes and emissions generated by selected manufacturing operations and provides emission factors for the various activities. The magnesium processing conducted at the PSC facility is not addressed specifically in AP-42. However, the equipment and activities of other mineral processing operations are similar to those of the PSC operations. Therefore, the appropriate AP-42 emission factors for these other facilities were applied to the PSC operation. The emission estimates shown above represent emissions from the finished product bins 1 and 2 dust collector vent, only. |

## H. EMISSIONS UNIT POLLUTANT DETAIL INFORMATION
**(Regulated Emissions Units Only - Emissions Limited Pollutants Only)**

**Emissions Unit Information Section** 1

Dust Collectors

**Emissions Unit Information Section** _____

**Pollutant Information Section** _____

**Allowable Emissions** _____

| |
|---|
| 1. Basis for Allowable Emissions Code : |
| 2. Future Effective Date of Allowable Emissions : |
| 3. Requested Allowable Emissions and Units : |
| 4. Equivalent Allowable Emissions : lb/hour tons/year |
| 5. Method of Compliance : |
| 6. Pollutant Allowable Emissions Comment (Desc. of Related Operating Method/Mode) : |

## I. VISIBLE EMISSIONS INFORMATION
## (Regulated Emissions Units Only)

**Emissions Unit Information Section** 1
Dust Collectors

**Visible Emissions Limitation :** Visible Emissions Limitation 1

| | | |
|---|---|---|
| 1. Visible Emissions Subtype : | 20 | |
| 2. Basis for Allowable Opacity : | RULE | |
| 3. Requested Allowable Opacity : | | |
| Normal Conditions : | 20 | % |
| Exceptional Conditions : | 20 | % |
| Maximum Period of Excess Opacity Allowed : | | min/hour |
| 4. Method of Compliance : | | |
| See Attachment G | | |
| 5. Visible Emissions Comment : | | |
| The visible emissions limiting rule is 62-296.320(4)(b) FAC. | | |

## J. CONTINUOUS MONITOR INFORMATION
**(Regulated Emissions Units Only)**

**Emissions Unit Information Section** _____

**Continuous Monitoring System :** Continuous Monitor _____

| | |
|---|---|
| 1. Parameter Code : | 2. Pollutant : |
| 3. CMS Requirement : | |
| 4. Monitor Information :<br>Manufacturer :<br>Model Number :<br>Serial Number : | |
| 5. Installation Date : | |
| 6. Performance Specification Test Date : | |
| 7. Continuous Monitor Comment : | |

## K. PREVENTION OF SIGNIFICANT DETERIORATION (PSD) INCREMENT TRACKING INFORMATION

**Emissions Unit Information Section** 1

Dust Collectors

**PSD Increment Consumption Determination**

1. Increment Consuming for Particulate Matter or Sulfur Dioxide?

[ ] The emissions unit is undergoing PSD review as part of this application, or has undergone PSD review previously, for particulate matter or sulfur dioxide. If so, emissions unit consumes increment.

[ ] The facility addressed in this application is classified as an EPA major source pursuant to paragraph (c) of the definition of "major source of air pollution" in Chapter 62-213, F.A.C., and the emissions unit addressed in this section commenced (or will commence) construction after January 6, 1975. If so, baseline emissions are zero, and emissions unit consumes increment.

[ ] The facility addressed in this application is classified as an EPA major source, and the emissions unit began initial operation after January 6, 1975, but before December 27, 1977. If so, baseline emissions are zero, and emissions unit consumes increment.

[ ] For any facility, the emissions unit began (or will begin) initial operation after December 27, 1977. If so, baseline emissions are zero, and emissions unit consumes increment.

[X] None of the above apply. If so, the baseline emissions of the emissions unit are nonzero. In such case, additional analysis, beyond the scope of this application, is needed to determine whether changes in emissions have occurred (or will occur) after the baseline date that may consume or expand increment.

2. Increment Consuming for Nitrogen Dioxide?

[ ] The emissions unit addressed in this section is undergoing PSD review as part of this application, or has undergone PSD review previously, for nitrogen dioxide. If so, emissions unit consumes increment.

[ ] The facility addressed in this application is classified as an EPA major source pursuant to paragraph (c) of the definition of "major source of air pollution" in Chapter 62-213, F.A.C., and the emissions unit addressed in this section commenced (or will commence) construction after February 8, 1988. If so, baseline emissions are zero, and emissions unit consumes increment.

[ ] The facility addressed in this application is classified as an EPA major source, and the emissions unit began initial operation after February 8, 1988, but before March 28, 1988. If so, baseline emissions are zero, and emissions unit consumes increment.

[ ] For any facility, the emissions unit began (or will begin) initial operation after March 28, 1988. If so, baseline emissions are zero, and emissions unit consumes increment.

[ ] None of the above apply. If so, baseline emissions of the emissions unit are nonzero. In such case, additional analysis, beyond the scope of this application, is needed to determine whether changes in emissions have occurred (or will occur) after the baseline date that may consume or expand increment.

| 3. Increment Consuming/Expanding Code : | | |
|---|---|---|
| PM : U | SO2 : | NO2 : |
| **4. Baseline Emissions :** | | |
| PM : | lb/hour | tons/year |
| SO2 : | lb/hour | tons/year |
| NO2 : | | tons/year |
| **5. PSD Comment :** | | |
| The dust collectors do not emit SO2 or NOx. | | |

## L. EMISSIONS UNIT SUPPLEMENTAL INFORMATION

**Emissions Unit Information Section** 1

Dust Collectors

**Supplemental Requirements for All Applications**

| | |
|---|---|
| 1. Process Flow Diagram : | Attachment D |
| 2. Fuel Analysis or Specification : | NA |
| 3. Detailed Description of Control Equipment : | Attachment F |
| 4. Description of Stack Sampling Facilities : | NA |
| 5. Compliance Test Report : | NA |
| 6. Procedures for Startup and Shutdown : | NA |
| 7. Operation and Maintenance Plan : | NA |
| 8. Supplemental Information for Construction Permit Application : | Attachment F |
| 9. Other Information Required by Rule or Statue : | NA |

**Additional Supplemental Requirements for Category I Applications Only**

| | |
|---|---|
| 10. Alternative Methods of Operations : | NA |
| 11. Alterntive Modes of Operation (Emissions Trading) : | NA |

| | |
|---|---|
| 12. Identification of Additional Applicable Requirements : | NA |
| 13. Compliance Assurance Monitoring Plan : | NA |
| 14. Acid Rain Application (Hard-copy Required) : | |
| NA | Acid Rain Part - Phase II (Form No. 62-210.900(1)(a)) |
| NA | Repowering Extension Plan (Form No. 62-210.900(1)(a)1.) |
| NA | New Unit Exemption (Form No. 62-210.900(1)(a)2.) |
| NA | Retired Unit Exemption (Form No. 62-210.900(1)(a)3.) |

# ATTACHMENT A

# APPLICABLE REQUIREMENTS

## *ATT. A APPLICABLE REQUIREMENTS*

The applicable requirements for the PSC facility are shown in the attached Table A-1. A tabulation of these requirements has also been submitted with the Title V application for the facility. There are no unit-specific applicable requirements for the dust collectors; therefore, the generally applicable requirements shown in Table A-1 are sufficient for the purposes of this application.

## TABLE A-1

## FACILITY-WIDE APPLICABLE REQUIREMENTS
## PREMIER SERVICES CORPORATION
## PORT ST. JOE, FLORIDA

*NOTES:*

[1] Y = Yes, C = Conditionally, O = Obsolete
[2] Taken from FDEP's *Title V Core List*, dated 01/02/96.

FAC = Florida Administrative Code
CFR = Code of Federal Regulations
PSC = Premier Services Corporation

### *Federal Regulations*

| Citation | Description | Applicable [1] | | | FDEP Core List [2] | Comment |
|---|---|---|---|---|---|---|
| | | Y | C | O | | |
| *40 CFR 61: National Emissions Standards for Hazardous Air Pollutants* | | | | | | |
| 40 CFR 61 Subpart M | National Emission Standard for Asbestos | | ✓ | | ✓ | Applies only when conducting an asbestos removal project. |
| *40 CFR 82: Stratospheric Ozone Protection Regulations* | | | | | | |
| 40 CFR 82 Subpart B | Servicing of Motor Vehicle Air Conditioners (MVAC) | | ✓ | | ✓ | PSC does not conduct MVAC servicing activities. |
| 40 CFR 82 Subpart F | Recycling and Emissions Reduction | ✓ | | | ✓ | |

## TABLE A-1

## FACILITY-WIDE APPLICABLE REQUIREMENTS
## PREMIER SERVICES CORPORATION
## PORT ST. JOE, FLORIDA

### *State Regulations*

| Citation | Description | Applicable | | | FDEP Core List [2] | Comment |
|---|---|---|---|---|---|---|
| | | Y | C | O | | |
| *Chapter 62-4 FAC: Permits* | | | | | | |
| 62-4.030 | General Prohibition | ✓ | | | ✓ | |
| 62-4.040 | Exemptions | ✓ | | | ✓ | |
| 62-4.050 | Procedure to Obtain Permits; Application | ✓ | | | ✓ | |
| 62-4.060 | Consultation | ✓ | | | ✓ | |
| 62-4.070 | Standards for Issuing or Denying Permits; Issuance; Denial | ✓ | | | ✓ | |
| 62-4.080 | Modification of Permit Conditions | ✓ | | | ✓ | |
| 62-4.090 | Renewals | ✓ | | | ✓ | |
| 62-4.100 | Suspension and Revocation | ✓ | | | ✓ | |
| 62-4.110 | Financial Responsibility | ✓ | | | ✓ | |
| 62-4.120 | Transfer of Permits | ✓ | | | ✓ | |
| 62-4.130 | Plant Operation - Problems | ✓ | | | ✓ | |
| 62-4.150 | Review | ✓ | | | ✓ | |
| 62-4.160 | Permit Conditions | ✓ | | | ✓ | Lists general conditions for all FDEP-issued permits. |
| 62-4.210 | Construction Permits | ✓ | | | ✓ | |
| 62-4.220 | Operation Permits for New Sources | ✓ | | | ✓ | |

## TABLE A-1

## FACILITY-WIDE APPLICABLE REQUIREMENTS
## PREMIER SERVICES CORPORATION
## PORT ST. JOE, FLORIDA

| Citation | Description | Applicable | | | FDEP Core List [2] | Comment |
|---|---|---|---|---|---|---|
| | | Y | C | O | | |
| *Chapter 62-103 FAC: Rules of Administrative Procedure - Final Agency Action (Non-Rulemaking) and Appeal* | | | | | | |
| 62-103.150 | Public Notice of Application and Proposed Agency Action | ✓ | | | ✓ | |
| 62-103.155 | Petition for Administrative Hearing; Waiver of Right to Administrative Proceeding | ✓ | | | ✓ | |
| *Chapter 62-210 FAC: Stationary Sources - General Requirements* | | | | | | |
| 62-210.300 | Permits Required | ✓ | | | ✓ | Provisions of 62-210.300 (4) do not apply. |
| 62-210.300(1) | Permits Required - Air Construction Permits | ✓ | | | ✓ | |
| 62-210.300(2) | Permits Required - Air Operation Permits | ✓ | | | ✓ | |
| 62-210.300(3) | Permits Required - Exemptions | ✓ | | | ✓ | Includes requirements for obtaining a temporary exemption for previously unpermitted activities at Title V sources. |
| 62-210.300(5) | Permits Required - Notification of Startup | ✓ | | | ✓ | |
| 62-210.300(6) | Emissions Unit Reclassification | ✓ | | | ✓ | |
| 62-210.350 | Public Notice and Comment | ✓ | | | ✓ | |
| 62-210.350(3) | Public Notice and Comment - Additional Public Notice Requirements for Facilities Subject to Operation Permits for Title V Sources | ✓ | | | ✓ | |
| 62-210.360 | Administrative Permit Corrections | ✓ | | | ✓ | |
| 62-210.370(3) | Reports - Annual Operating Report for Air Pollutant Emitting Facility | ✓ | | | ✓ | |
| 62-210.650 | Circumvention | ✓ | | | ✓ | |
| 62-210.700 | Excess Emissions | | ✓ | | ✓ | PSC does not undergo periods of excess emissions. |

## TABLE A-1

## FACILITY-WIDE APPLICABLE REQUIREMENTS
## PREMIER SERVICES CORPORATION
## PORT ST. JOE, FLORIDA

| Citation | Description | Applicable | | | FDEP Core List [1] | Comment |
|---|---|---|---|---|---|---|
| | | Y | C | O | | |
| 62-210.900 | Forms and Instructions | ✓ | | | ✓ | |
| 62-210.900(1) | Forms and Instructions - Application for Air Permit, Long Form, Form, and Instructions | ✓ | | | ✓ | Form used for all Title V operating permit applications. |
| 62-210.900(5) | Forms and Instructions - Annual Operating Report for Pollutant Emitting Facility | ✓ | | | ✓ | Form used for Title V facility Annual Operating Reports. |
| *Chapter 62-213 FAC: Operating Permits for Major Sources o f Air Pollution* | | | | | | |
| 62-213.205 | Annual Emissions Fee | ✓ | | | ✓ | |
| 62-213.400 | Permits and Permit Revisions Required | ✓ | | | ✓ | |
| 62-213.410 | Changes Without Permit Revision | ✓ | | | ✓ | |
| 62-213.412 | Immediate Implementation Pending Revision Process | ✓ | | | ✓ | |
| 62-213.420 | Permit Applications | ✓ | | | ✓ | |
| 62-213.430 | Permit Issuance, Renewal, and Revision | ✓ | | | ✓ | |
| 62-213.440 | Permit Content | ✓ | | | ✓ | |
| 62-213.460 | Permit Shield | ✓ | | | ✓ | |
| 62-213.900 | Forms and Instructions | ✓ | | | ✓ | |
| 62-213.900(1) | Forms and Instructions - Major Air Pollution Annual Emissions Fee Form | ✓ | | | ✓ | |
| *Chapter 62-256 FAC: Open Burning and Frost Protection Fires* | | | | | | |
| 62-256 | Open Burning and Frost Protection Fires | | ✓ | | ✓ | PSC does not conduct open burning. |
| *Chapter 62-257 FAC: Asbestos Notification and Fee* | | | | | | |
| 62-257 | Asbestos Notification and Fee | | ✓ | | ✓ | Applies only during an asbestos removal project. |

## TABLE A-1

## FACILITY-WIDE APPLICABLE REQUIREMENTS
## PREMIER SERVICES CORPORATION
## PORT ST. JOE, FLORIDA

| Citation | Description | Applicable | | | FDEP Core List [2] | Comment |
|---|---|---|---|---|---|---|
| | | Y | C | O | | |
| *Chapter 62-281 FAC: Motor Vehicle Air Conditioning Refrigerant Recovery and Recycling* | | | | | | |
| 62-281 | Motor Vehicle Air Conditioning (MVAC) Refrigerant Recovery and Recycling | | ✓ | | ✓ | PSC does not conduct MVAC servicing activities. |
| *Chapter 62-296 FAC: Stationary Sources - Emission Standards* | | | | | | |
| 62-296.320(2) | General Pollutant Emission Limiting Standards - Objectionable Odor Prohibited | ✓ | | | ✓ | |
| 62-296.320(3) | General Pollutant Emission Limiting Standards - Industrial, Commercial, and Municipal Open Burning Prohibited | | ✓ | | ✓ | PSC does not conduct open burning. |
| 62-296.320(4)(b) | General Pollutant Emission Limiting Standards - General Visible Emissions Standard | ✓ | | | | Applies to all stacks/vents at PSC facility. |
| 62-296.320(4)(c) | General Particulate Emission Limiting Standards - Unconfined Emissions of Particulate | ✓ | | | ✓ | Applies to fugitive particulate emissions sources. |
| *Chapter 62-297 FAC: Stationary Sources - Emissions Monitoring* | | | | | | |
| 62-297.310 | General Compliance Test Requirements | ✓ | | | | |
| 62-297.620 | Exceptions and Approval of Alternate Procedures and Requirements | ✓ | | | | |

# ATTACHMENT B

# SITE LOCATION MAP

# Site Location Map
# Premier Services Corp.
# Port St. Joe, Florida

PORT ST. JOE QUADRANGLE
FLORIDA-GULF COUNTY
7.5 MINUTE SERIES (ORTHOPHOTOQUAD)
REVISED 1982

T. 7 S.

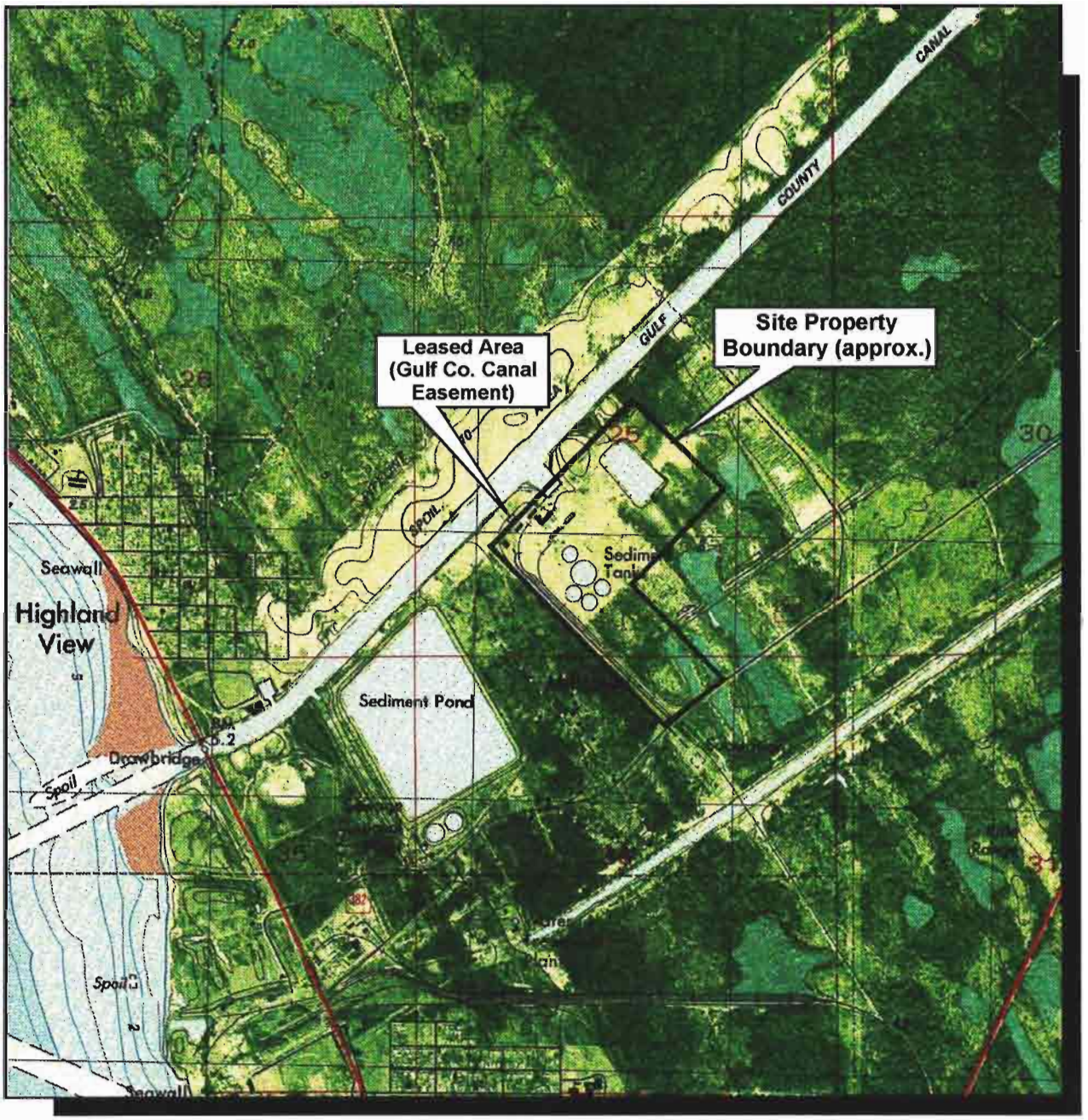


R. 11 W.

R. 10 W.

QUADRANGLE LOCATION

N

0 2000

FEET

708.02/SITE1/032996

ERM

# ATTACHMENT C

# SITE LAYOUT MAP

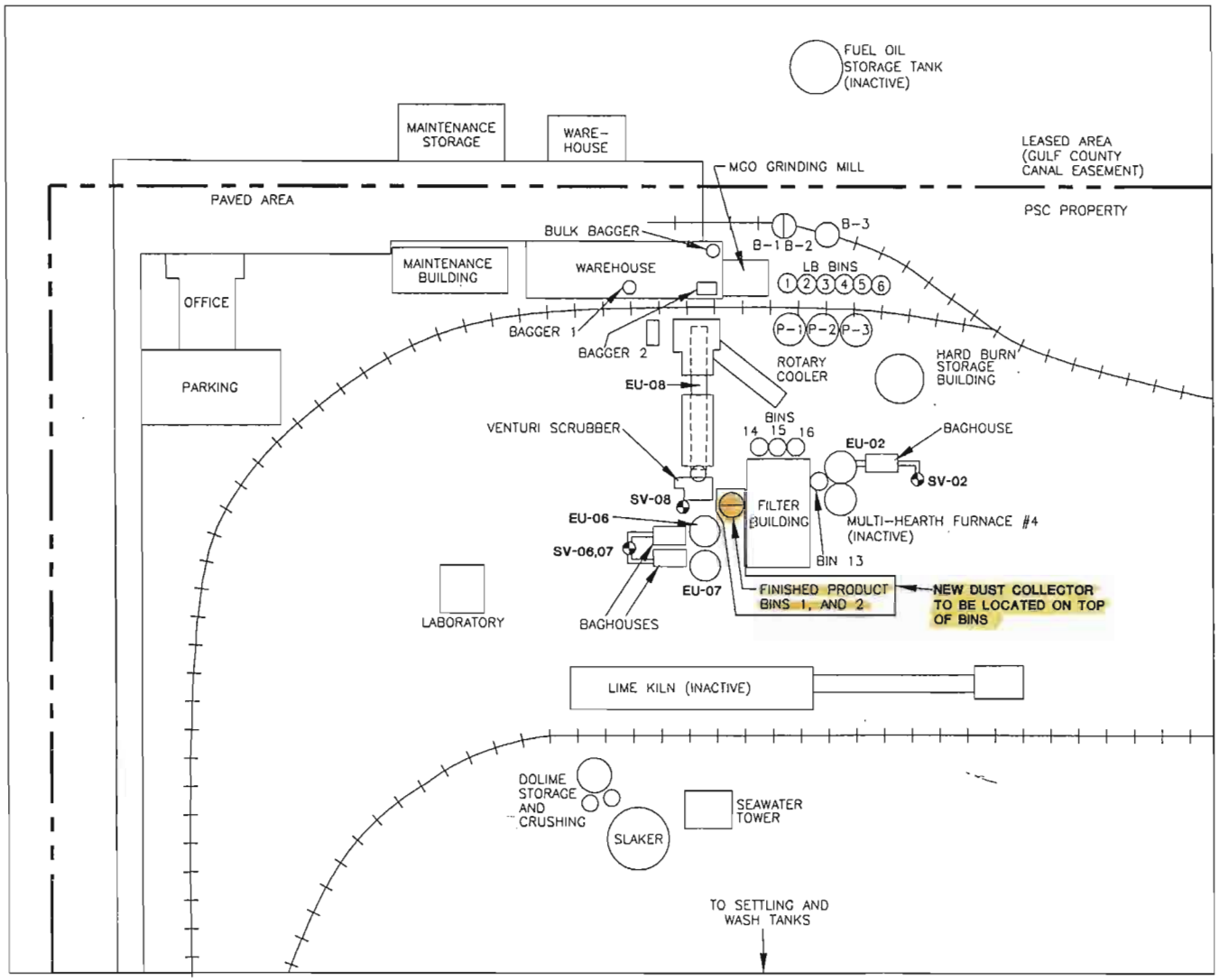


# Site Layout
## Premier Services Corp.
## Port St. Joe, Florida

| REGULATED EMISSIONS UNIT I.D. | STACK/ VENT I.D. | DESCRIPTION |
|---|---|---|
| EU-02 | SV-02 | MULTI-HEARTH FURNACE #3 |
| EU-06 | SV-06,07 | MULTI-HEARTH FURNACE #1 |
| EU-07 | SV-06,07 | MULTI-HEARTH FURNACE #2 |
| EU-08 | SV-08 | ROTARY KILN |

LEGEND

RAIL TRACK

SV-# STACK/VENT LOCATION

PROPERTY BOUNDARY

0 APPROXIMATE SCALE 100 FEET

ERM

708.02 BASE 050696

# ATTACHMENT D

# PROCESS FLOW DIAGRAM

# Process Flow Schematic
# Premier Services Corp.
# Port St. Joe, Florida

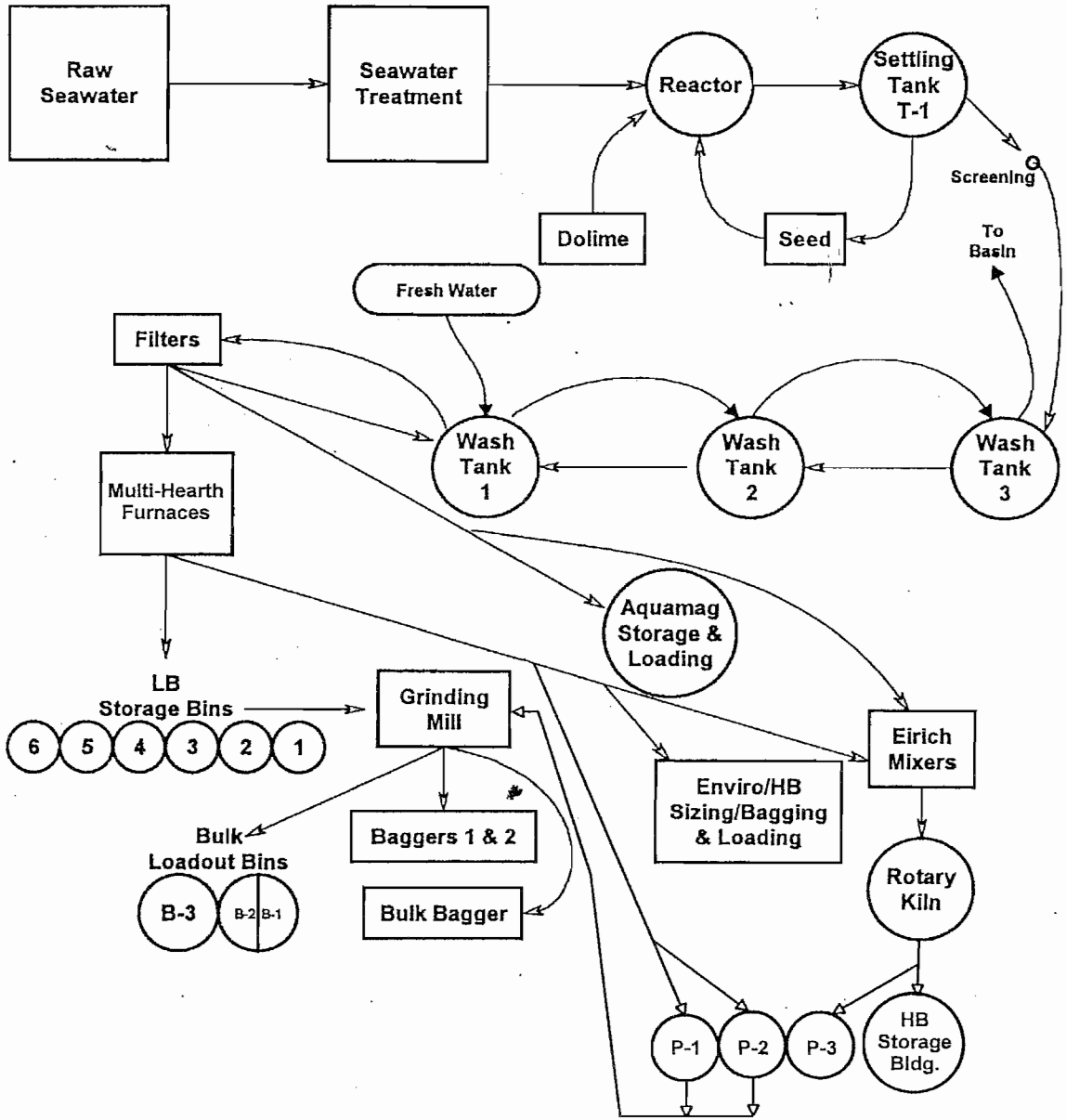


ERM

708.02/prodflow/041996

# ATTACHMENT E

# FUGITIVE EMISSIONS IDENTIFICATION

## *ATT.E. FUGITIVE EMISSIONS IDENTIFICATION*

The dust collector is being installed on the Finished Product Storage Bins 1 and 2 to collect and control potential fugitive emissions from these bins. Once the dust collector is installed, fugitive emissions are expected to be virtually nonexistent. As a result, precautions to prevent emissions of unconfined particulate matter are not applicable to these bins.

# ATTACHMENT F

# FINISHED PRODUCT BINS 1 AND 2
# DUST COLLECTOR SPECIFICATIONS

PREMIER
SERVICES CORPORATION

# FINISHED PRODUCT BINS

## PROCESS

Storage and transfer of warm material - Magnesium Oxide

4 Tons/Hr. - 222 Cu. Ft./Hour of feed

Natural exhaust temperature ~ 275° F

90% -200 mesh material

Dry - No steam

## EQUIPMENT

Silos are unloaded with pneumatic pumps. Observation indicates only minor leakage into the silos from this equipment.

## EXHAUST REQUIREMENT

Elevator and Silos

Note: Warm material creates a rising velocity - flue effect - in these silos.
You quoted this installation September 1, 1994.

State Road 382 North ▪ P.O. Box 160 ▪ Port St. Joe, FL 32456 ▪ (904) 227-1167 ▪ FAX: (904) 229-6187

**PREMIER**
SERVICES CORPORATION

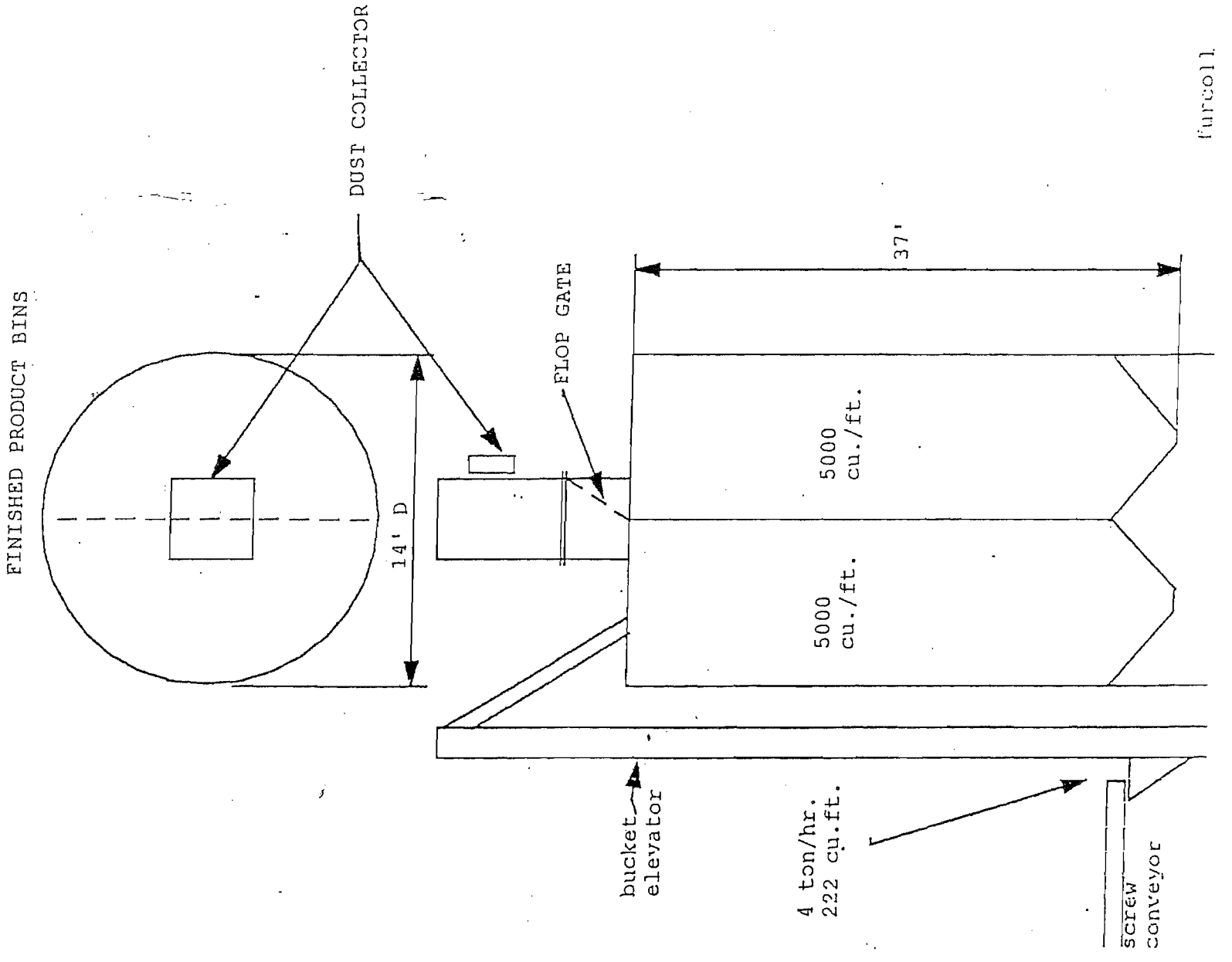


State Road 382 North ▪ P.O. Box 160 ▪ Port St. Joe, FL 32456 ▪ (904) 227-1167 ▪ FAX: (904) 229-6187

ordered
3/21/96
PSC 01231



Options:
Support Steel.....$ 595.00
Access Platform and Ladder less Cages.....$ 1,090.00

Excluded is support steel and access platforms. The fan can be roof mounted.

Application 2 - Finish Product Bin — Dust Collector Cloth Ration is 4:1; Exhaust Temperature of 275°F

One (1) Model 84BF025 bottom bag removal Bin Vent Filter, 265 SF total cloth area including:
-Carbon steel bag cages and venturis
-Compressed air header assembly mounted on collector
-Access door with sloped ledge to prevent dust build-up
-Solenoid valves prewired to a solid state timer, both mounted in a NEMA 4 enclosure
-Differential pressure gauge - shipped loose for field mounting
-Removable weather cover on stub outlet
-Mild steel internal air piping
-Shop applied medium oil alkyd primer on exterior mild steel surfaces
-Design pressure of ±20" W.G.
-One (1) set of 16 oz. polyester felt filter bags
-The base flange will be a structural angle
-Full internal safety grid

* Your temperature is at the upper limits of polyester; we have offered a price adder for Nomex bags.

One (1) New York Model 5HP146 fan including a 5 HP, TEFC motor, fan, damper and mounting platform.

System Price (with polyester bags).....$5,189.00
Adder for Nomex bags.....$ 597.20

Application 3 - Dust Collector Screens — Dust Collector Cloth Ration is 5:1; Unit is sized based on 100 CFM/sf of screen area. 3 X 8 screen allows a 12" dust to dust collector; 2400 CFM.

One (1) Model 84NF49bottom bag removal Nuisance Filter, 519 SF total cloth area including:
-Carbon steel bag cages and venturis
-Compressed air header assembly mounted on collector
-Access door with sloped ledge to prevent dust build-up
-Solenoid valves prewired to a solid state timer, both mounted in a NEMA 4 enclosure
-Differential pressure gauge-shipped loose for field mounting
-Stub gas inlet and outlet

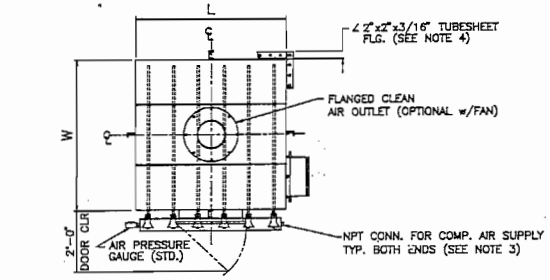


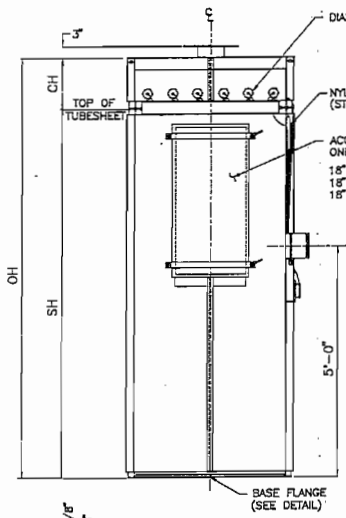


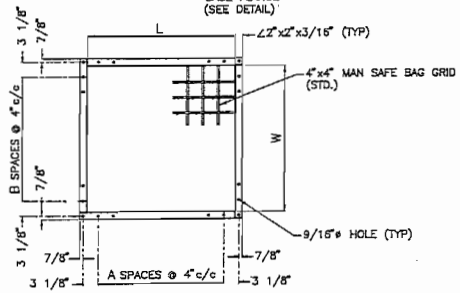


BASE FLANGE DETAIL

CUSTOMER TO INDICATE MODEL, LOCATION OF COMPONENTS, AND OUTLET SIZE.

MODEL: _____

OUTLET (A,B,D OR E): ☐ SIZE: ____

ACCESS DOOR (A,B,C OR D): ☐

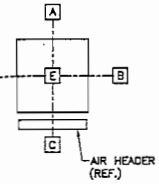


ORIENTATION VIEW & OPTIONS

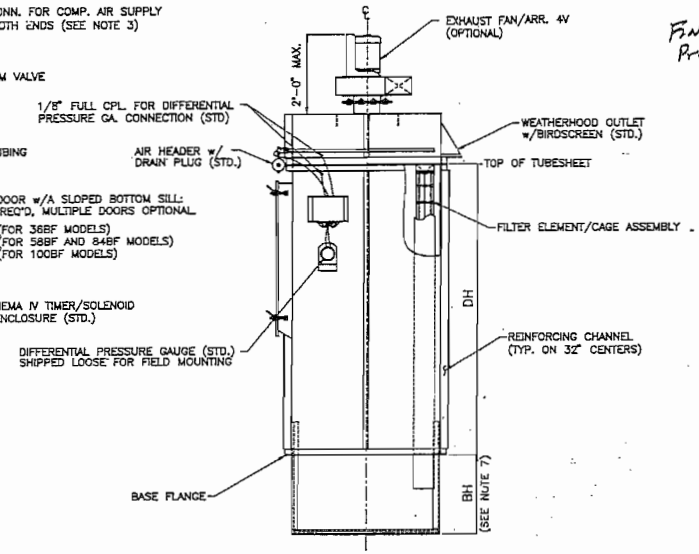


INSERTABLE DESIGN OPTION

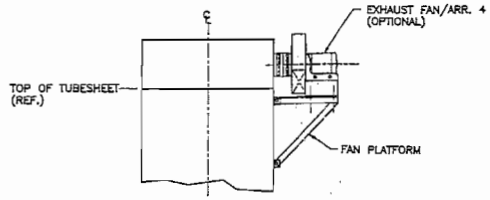


OPTIONAL BLOWER ARRANGEMENT

Finished Product

| MODEL | FILTER AREA SQ. FT. | L | W | SH | CH | OH | BH | DH | NO. OF VALVES | COMP. AIR REQ'D (SCFM) | NO. OF SPACES A | NO. OF SPACES B | EST GROSS WT. (LBS) |
|---|---|---|---|---|---|---|---|---|---|---|---|---|---|
| 36BF009 | 41 | 2'-0" | 2'-0" | 3'-10" | 1'-0" | 4'-10" | ~ | ~ | 3 | 8 | 5 | 5 | 320 |
| 58BF009 | 66 | 2'-0" | 2'-0" | 5'-8" | 1'-0" | 6'-8" | ~ | ~ | 3 | 8 | 5 | 5 | 410 |
| 84BF009 | 95 | 2'-0" | 2'-0" | 7'-10" | 1'-0" | 8'-10" | 1'-10" | 6'-0" | 3 | 8 | 5 | 5 | 510 |
| 36BF012 | 54 | 2'-0" | 2'-8" | 3'-10" | 1'-0" | 4'-10" | ~ | ~ | 3 | 8 | 5 | 7 | 380 |
| 58BF012 | 88 | 2'-0" | 2'-8" | 5'-8" | 1'-0" | 6'-8" | ~ | ~ | 3 | 8 | 5 | 7 | 480 |
| 84BF012 | 127 | 2'-0" | 2'-8" | 7'-10" | 1'-0" | 8'-10" | 1'-10" | 6'-0" | 3 | 8 | 5 | 7 | 605 |
| 36BF016 | 72 | 2'-8" | 2'-8" | 3'-10" | 1'-2" | 5'-0" | ~ | ~ | 4 | 8 | 7 | 7 | 475 |
| 58BF016 | 117 | 2'-8" | 2'-8" | 5'-8" | 1'-2" | 6'-10" | ~ | ~ | 4 | 8 | 7 | 7 | 600 |
| 84BF016 | 170 | 2'-8" | 2'-8" | 7'-10" | 1'-2" | 9'-0" | 1'-10" | 6'-0" | 4 | 8 | 7 | 7 | 745 |
| 36BF020 | 90 | 2'-8" | 3'-4" | 3'-10" | 1'-2" | 5'-0" | ~ | ~ | 4 | 8 | 7 | 9 | 605 |
| 58BF020 | 146 | 2'-8" | 3'-4" | 5'-8" | 1'-2" | 6'-10" | ~ | ~ | 4 | 8 | 7 | 9 | 765 |
| 84BF020 | 212 | 2'-8" | 3'-4" | 7'-10" | 1'-2" | 9'-0" | 1'-10" | 6'-0" | 4 | 8 | 7 | 9 | 950 |
| 58BF025 | 183 | 3'-4" | 3'-4" | 5'-8" | 1'-4" | 7'-0" | ~ | ~ | 5 | 8 | 9 | 9 | 985 |
| 84BF025 | 265 | 3'-4" | 3'-4" | 7'-10" | 1'-4" | 9'-2" | 1'-10" | 6'-0" | 5 | 8 | 9 | 9 | 1220 |
| 58BF030 | 219 | 3'-4" | 4'-0" | 5'-8" | 1'-4" | 7'-0" | ~ | ~ | 5 | 8 | 9 | 11 | 1100 |
| 84BF030 | 318 | 3'-4" | 4'-0" | 7'-10" | 1'-4" | 9'-2" | 1'-10" | 6'-0" | 5 | 8 | 9 | 11 | 1360 |
| 58BF036 | 263 | 4'-0" | 4'-0" | 5'-8" | 1'-4" | 7'-0" | ~ | ~ | 6 | 8 | 11 | 11 | 1280 |
| 84BF036 | 382 | 4'-0" | 4'-0" | 7'-10" | 1'-4" | 9'-2" | 1'-10" | 6'-0" | 6 | 8 | 11 | 11 | 1570 |
| 58BF042 | 307 | 4'-0" | 4'-8" | 5'-8" | 1'-4" | 7'-0" | ~ | ~ | 6 | 8 | 11 | 13 | 1400 |
| 84BF042 | 445 | 4'-0" | 4'-8" | 7'-10" | 1'-4" | 9'-2" | 1'-10" | 6'-0" | 6 | 8 | 11 | 13 | 1720 |
| 58BF049 | 358 | 4'-8" | 4'-8" | 5'-8" | 1'-4" | 7'-0" | ~ | ~ | 7 | 8 | 13 | 13 | 1560 |
| 84BF049 | 519 | 4'-8" | 4'-8" | 7'-10" | 1'-4" | 9'-2" | 1'-10" | 6'-0" | 7 | 8 | 13 | 13 | 1915 |
| 58BF056 | 409 | 4'-8" | 5'-4" | 5'-8" | 1'-4" | 7'-0" | ~ | ~ | 7 | 8 | 13 | 15 | 1695 |
| 84BF056 | 594 | 4'-8" | 5'-4" | 7'-10" | 1'-4" | 9'-2" | 1'-10" | 6'-0" | 7 | 8 | 13 | 15 | 2080 |
| 58BF064 | 467 | 5'-4" | 5'-4" | 5'-8" | 1'-4" | 7'-0" | ~ | ~ | 8 | 8 | 15 | 15 | 1870 |
| 84BF064 | 678 | 5'-4" | 5'-4" | 7'-10" | 1'-4" | 9'-2" | 1'-10" | 6'-0" | 8 | 8 | 15 | 15 | 2290 |
| 58BF072 | 526 | 5'-4" | 6'-0" | 5'-8" | 1'-4" | 7'-0" | ~ | ~ | 8 | 8 | 15 | 17 | 2095 |
| 84BF072 | 763 | 5'-4" | 6'-0" | 7'-10" | 1'-4" | 9'-2" | 1'-10" | 6'-0" | 8 | 8 | 15 | 17 | 2570 |
| 84BF081 | 859 | 6'-0" | 6'-0" | 7'-10" | 1'-6" | 9'-4" | 1'-10" | 6'-0" | 9 | 15 | 17 | 17 | 2990 |
| 100BF081 | 1021 | 6'-0" | 6'-0" | 9'-2" | 1'-6" | 10'-8" | 3'-2" | 6'-0" | 9 | 15 | 17 | 17 | 3315 |
| 84BF090 | 954 | 6'-0" | 6'-8" | 7'-10" | 1'-6" | 9'-4" | 1'-10" | 6'-0" | 9 | 15 | 17 | 19 | 3440 |
| 100BF090 | 1134 | 6'-0" | 6'-8" | 9'-2" | 1'-6" | 10'-8" | 3'-2" | 6'-0" | 9 | 15 | 17 | 19 | 3790 |
| 84BF100 | 1060 | 6'-8" | 6'-8" | 7'-10" | 1'-6" | 9'-4" | 1'-10" | 6'-0" | 10 | 15 | 19 | 19 | 3720 |
| 100BF100 | 1260 | 6'-8" | 6'-8" | 9'-2" | 1'-6" | 10'-8" | 3'-2" | 6'-0" | 10 | 15 | 19 | 19 | 4095 |

NOTES:

1) OUTLET SIZE SHALL BE BASED ON RECOMMENDED 3,000 – 4,000 FT/MIN VELOCITY, UNLESS OTHERWISE SPECIFIED.

2) DESIGN PRESSURE ±20"W.G.

3) COMPRESSED AIR REQUIREMENT IS BASED ON CLEAN DRY AIR AT 90–100 PSIG. AND 8–10 SEC. OFF–TIME.

4) MODELS WITH 42 BAGS AND LARGER HAVE EXTERNALLY FLG'D TUBESHEETS.

5) EXTERIOR M.S. SURFACES ARE CLEANED PER SSPC–SP1 (SOLVENT WIPED) AND SSPC–SP3 (POWER TOOL CLEANING) FOLLOWED BY ONE (1) COAT OF RUST INHIBITIVE DIRECT–TO–METAL INDUSTRIAL ENAMEL @ 3–4 MILS D.F.T.

6) SOLENOID VALVES ARE PRE–WIRED TO TIMER AND MOUNTED IN A NEMA IV ENCLOSURE (OTHER ENCLOSURES AVAILABLE).

7) THE INSERTABLE COLLECTOR DESIGN OPTION, AVAILABLE ON UNITS WITH 84" BAGS AND LONGER, MAINTAINS LOW HEADROOM CLEARENCES AND ALLOWS ACCESS TO THE COMPRESSED AIR HEADER ASSEMBLY AND FILTER BAGS FROM THE BASE FLANGE ELEVATION OF THE UNIT.

8) THIS DRAWING TO BE USED FOR GENERAL ARRANGEMENT AND ENGINEERING ONLY, NOT TO BE USED FOR CONSTRUCTION UNLESS CERTIFIED. (OTHER MODELS AVAILABLE)

C.P. ENVIRONMENTAL FILTERS, INC.

SCALE: N.T.S. DRAWN BY D.A.M.
DATE: 8–19–93 APPROVED BY [illegible]

THIS DRAWING SUPERCEDES DRAWING NO. PG–104–1

BIN VENT FILTER SERIES
PLANOGRAPH

DWG NUMBER PG–104–2

# TEC ENGINEERING ASSOC

PURCHASE ORDER : 4591

TAG : PSC01231

## FAN INFORMATION

QUANTITY : 1
FAN TYPE : Compact GI
FAN SIZE : 146
FAN CLASS : NONE
ROTATION : CW
DISCHARGE : TH
ARRANGEMENT : 4

## MOTOR INFORMATION

ENCLOSURE : TE
HORSEPOWER : 5.0
RPM : 3500
ELECT. DATA : 3-60-230/460
FRAME SIZE : 184T
MOTOR BY : NYB
MOUNT BY : NYB

## FAN PERFORMANCE DATA

MAX SAFE SPEED : 3600 RPM at 70 Deg.

| CAP | TYPE | CFM | SP | RPM | BHP | TEMP | ALT | DENSITY |
|---|---|---|---|---|---|---|---|---|
| 1 | STD. | 1100.0 | 12.98 | 3500 | 3.73 | 70 | 0.0 | 0.0750 |

## CERTIFIED DRAWING PACKET*

FAN CERTIFIED DRAWING..... Dwg# N04441-120-2
OUTLET DAMPER..... Dwg# N04441-120-3

## ADDITIONAL INFORMATION

NUMBER OF DRAWING SETS : 4
ESTIMATED SHIPPING WT. : 197 lbs.
(includes fan, motor, & pertinent accessory weights)

* DRAWINGS ARE FOR CONSTRUCTION PURPOSES

nyb The New York Blower Company
7660 Quincy Street, Willowbrook, IL 60521

Compact GI
SIZE 146

Date 03/26/96 Certified GAT
Drawing No. N04441-120-1 Rev.

IDCOVER

*TEC ENGINEERING ASSOC*

PURCHASE ORDER: 4591

TAG: PSC01231

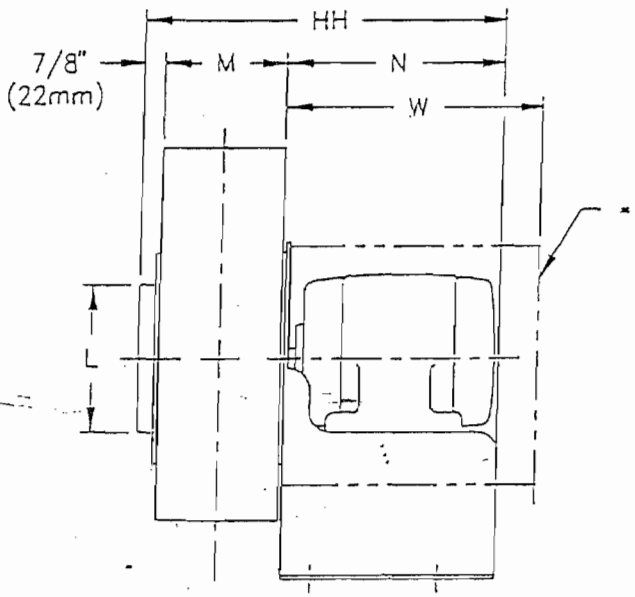


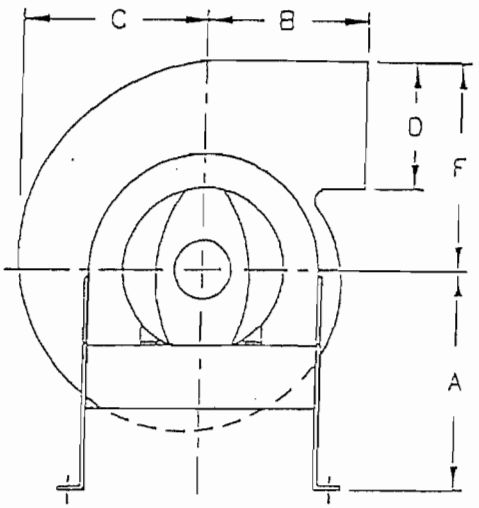


* : OPTIONAL WEATHER COVER

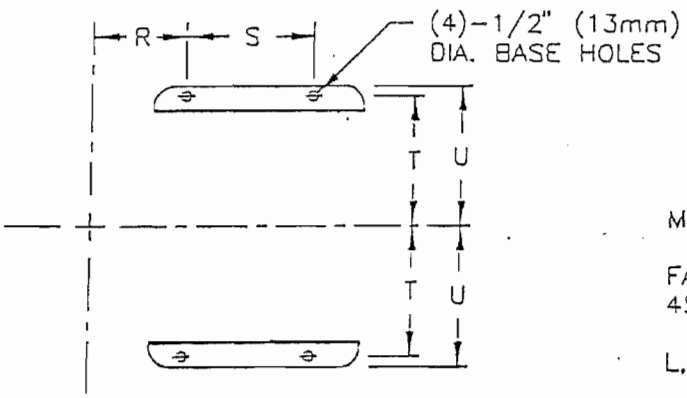


MAXIMUM TEMPERATURE: 180°F (82°C).

FAN IS ROTATABLE IN FIELD BY 45° INCREMENTS.

L, M, & D ARE OUTSIDE DIMENSIONS.

| ITEM | DIMENSIONS | |
|---|---|---|
| | in | mm |
| A | 13 1/2 | 343 |
| B | 10 1/2 | 267 |
| C | 11 1/8 | 283 |
| D | 8 1/4 | 210 |
| F | 12 | 305 |
| HH | 17 5/8 | 448 |
| L | 8 | 203 |
| M | 5 5/8 | 143 |

| ITEM | DIMENSIONS | |
|---|---|---|
| | in | mm |
| N | 11 1/8 | 283 |
| R | 4 15/16 | 125 |
| S | 7 | 178 |
| T | 7 11/16 | 195 |
| U | 8 3/16 | 208 |
| W | 15 | 381 |

TOLERANCE: ±1/8" (±3mm)

nyb The New York Blower Company

7660 Quincy Street, Willowbrook, IL 60521

COMPACT GI FAN
SIZE 146 CW TH

Date 03-26-96 Certified GAT

Drawing No. N04441-120-2 Rev. ____

D60A

# TEC ENGINEERING ASSOC

PURCHASE ORDER: 4591

TAG: PSC01231

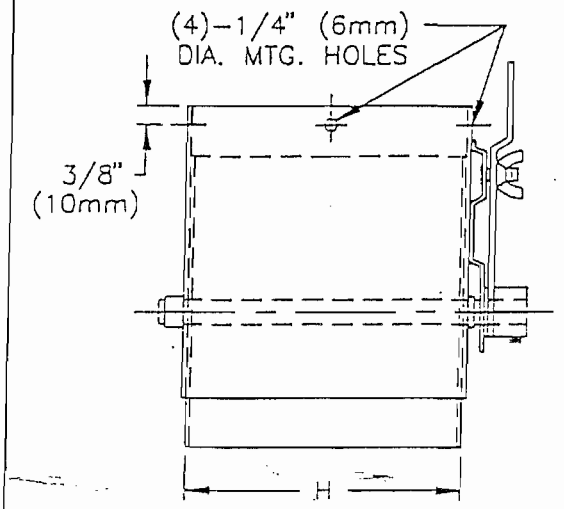


DAMPER IS SINGLE VANE TYPE.

DAMPER MOUNTS TO FAN WITH CONTROL ARM ON INLET SIDE OF FAN.

DAMPER SLIPS OVER FAN OUTLET WITH A 1" (25mm) OVERLAP HAVING THE EFFECT OF EXTENDING THE FAN B DIMENSION BY F DIMENSION.

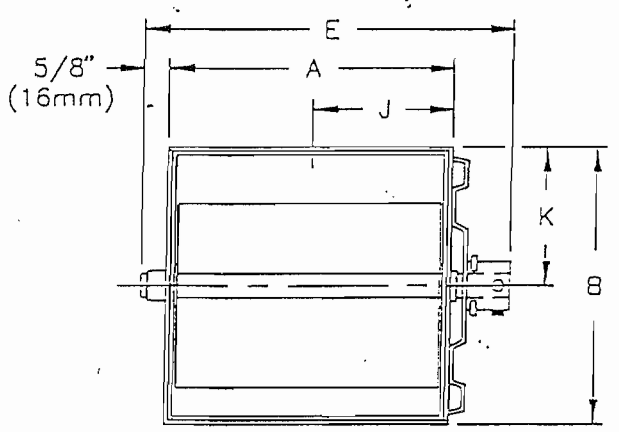


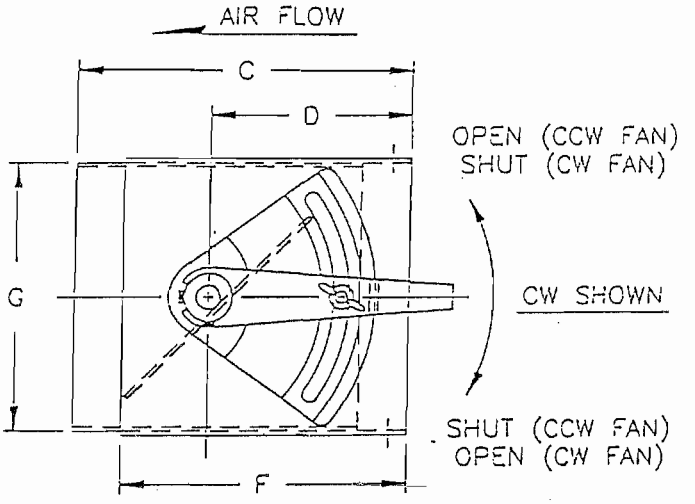


| ITEM | DIMENSIONS | |
|---|---|---|
| | in | mm |
| A | 5 3/4 | 146 |
| B | 8 3/8 | 213 |
| C | 8 3/4 | 222 |
| D | 4 3/4 | 121 |
| E | 7 3/8 | 187 |
| F | 7 3/4 | 197 |
| G | 8 1/4 | 210 |
| H | 5 5/8 | 143 |
| J | 2 7/8 | 73 |
| K | 4 3/16 | 106 |

TOLERANCE: ±1/8" (±3mm)

nyb The New York Blower Company

7660 Quincy Street, Willowbrook, IL 60521

COMPACT GI FAN
SIZE 146 OUTLET DAMPER

Date 03-26-96 Certified GAT

Drawing No. N04441-120-3 Rev. ___

D63A

The New York Blower Company

7660 Quincy Street, Willowbrook, IL 60521

# PERFORMANCE CURVE

To determine Performance at another RPM multiply
CFM x K
SP x $K^2$
BHP x $K^3$
where K is new RPM divided by RPM shown at right.

CUST. NO : 4591
CUSTOMER : TEC ENGINEERING ASSOC
TAGGING : PSC01231
FAN TYPE : Compact GI
FAN SIZE : 146
CFM : 1100
SP : 13.0
RPM : 3500
BHP : 3.74

CAPACITY TYPE: STD
TEMP : 70 deg F
DENS : 0.075 LB/FT³

DATE : Mar 26 1996

FILE : N04441 - 120 GAT

PERFORMANCE OPTIONS : Outlet Damper (and Evase' Damper)

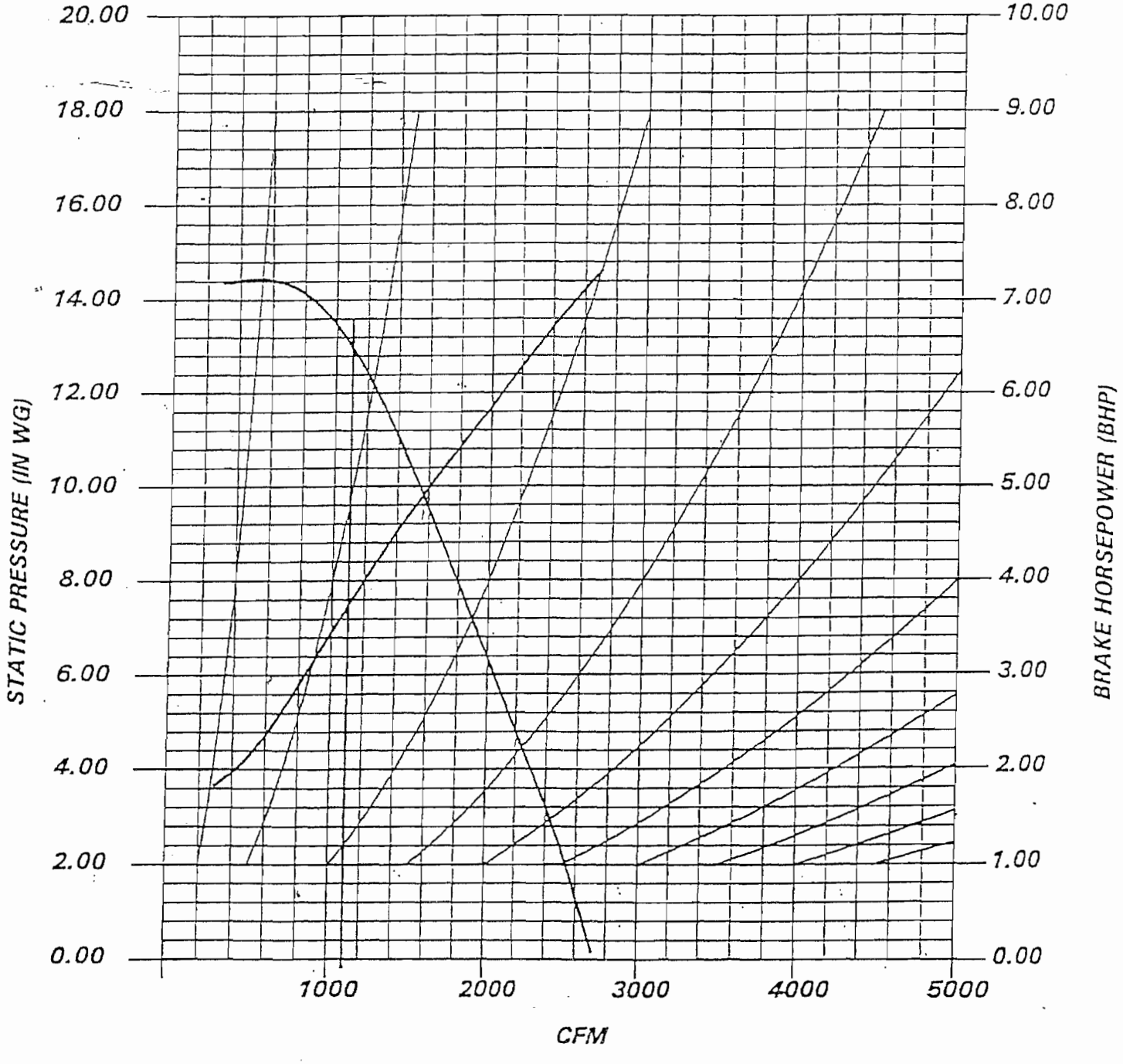

# ATTACHMENT G

# COMPLIANCE WITH GENERALS VISIBLE EMISSION STANDARD

## *COMPLIANCE WITH GENERAL VISIBLE EMISSIONS STANDARD*

The dust collector is subject to the general opacity standard set forth in 62-296.320(4)(b) FAC. To demonstrate compliance with the standard, PSC will conduct monitoring and maintenance according to the following protocols:

- Daily activities will include measurement of the air pressure drop across the baghouse using a suitable differential pressure gauge, and a qualitative observation of opacity from the dust collector vent (i.e., identifying the presence or absence of a visible plume). If the pressure drop is too low or visible emissions are observed, the cause of the malfunction shall be determined and the dust collection blower shut down until a repair is made.

- On a monthly basis, the baghouse will be inspected for torn, obstructed, or otherwise malfunctioning filters. Filters will be replaced as necessary during these inspections, or as malfunctions are discovered.

- PSC will record the findings of all daily and monthly inspections including pressure drop readings, occurrence/absence of visible emissions, date, number, and type of filters replaced, and other general comments on the performance of the dust collector.