Department of
Environmental Protection

Division of Air Resources Management

SEP 30 2016
Environmental Quality Division

APPLICATION FOR NON-TITLE V AIR PERMIT RENEWAL

See Instructions for Form No. 62-210.900(4)

I. APPLICATION INFORMATION

Identification of Facility

1. Facility Owner/Company Name: GOODRICH CORPORATION	
2. Site Name: ENGINEERED POLYMER PRODUCTS	
3. Facility Identification Number: 0310271	4. Facility Status Code: A

Application Contact

1. Name and Title of Application Contact: NANETTE MUNOZ ENVIRONMENT, HEALTH & SAFETY MANAGER
2. Application Contact Mailing Address: Organization/Firm: GOODRICH CORPORATION Street Address: 6061 GOODRICH BOULEVARD City: JACKSONVILLE State: FL Zip Code: 32226-3409
3. Application Contact Telephone Numbers: Telephone: (904) 696 - 4196 Fax: (860) 998 - 4076
4. Application Contact E-mail Address: NANETTE.MUNOZ@UTAS.UTC.COM

Application Processing Information (DEP Use)

1. Date of Receipt of Application:	
2. Permit Number:	

Owner/Authorized Representative

1. Name and Title of Owner/Authorized Representative:
   BRET G. SMITH, PLANT MANAGER

2. Owner/Authorized Representative Mailing Address:

   Organization/Firm: GOODRICH CORPORATION
   Street Address: 6061 GOODRICH BLVD.
   City: JACKSONVILLE State: FL Zip Code: 32226

3. Owner/Authorized Representative Telephone Numbers:
   Telephone: (904) 696 - 4162 Fax: (904) 757 - 7116

4. Owner/Authorized Representative E-mail Address: BRET.SMITH@UTAS.UTC.COM

5. Owner/Authorized Representative Statement:

   I, the undersigned, am the owner or authorized representative of the facility addressed in this Application for Air Permit. I hereby certify, based on information and belief formed after reasonable inquiry, that the statements made in this application are true, accurate and complete and that, to the best of my knowledge, any estimates of emissions reported in this application are based upon reasonable techniques for calculating emissions. Further, I agree to operate and maintain the air pollutant emissions units and air pollution control equipment described in this application so as to comply with all applicable standards for control of air pollutant emissions found in the statutes of the State of Florida and rules of the Department of Environmental Protection and revisions thereof. I understand that a permit, if granted by the Department, cannot be transferred without authorization from the Department, and I will promptly notify the Department upon sale or legal transfer of any permitted emissions unit.*

   Bret Smith
   Signature

   9-29-16
   Date

* Attach letter of authorization if not currently on file.

Scope of Application

Emissions Unit ID	Description of Emissions Unit	Permit Type	Processing Fee
001	SONAR DOME/COMPOSITE PARTS GRINDING	A02C	$750
003	SONAR DOME/COMPOSITE PARTSMANUFACTURING OPERATIONS	A02B	$1000
006	COMPOSITE PARTS BLASTING	A02C	$750
007	COMPOSITE PARTS PAINTING	A02B	$1000
008	BOILER NO. 1	A02B	$1000
009	BOILER NO. 2	A02B	$1000

Application Processing Fee

Check one: [ ] Attached - Amount: $ 4,000 (max payment) [ ] Not Applicable

Application Comment

THE FACILITY IS NOT REQUESTING ANY CHANGES TO THE EMISSION LIMITS FROM THE CURRENT PERMIT (0310271-009-AF).

EU-010 COMPOSITE PARTS PAINTING HAS BEEN DECOMISSIONED AS OF FEBRUARY 2016. NO LONGER IN USE AT THE FACILITY.

SEP 30 2016

II. FACILITY INFORMATION

Facility Contact

1.	Name and Title of Facility Contact: NANETTE MUNOZ ENVIRONMENT, HEALTH AND SAFETY MANAGER
2.	Facility Contact Mailing Address: Organization/Firm: GOODRICH CORPORATION Street Address: 6061 GOODRICH BLVD. City: JACKSONVILLE State: FL Zip Code: 32226-3409
3.	Facility Contact Telephone Numbers: Telephone: (904) 696 - 4196 Fax: (860) 998 - 4076
4.	Facility Contact E-mail Address: NANETTE.MUNOZ@UTAS.UTC.COM

Facility Supplemental Requirements

1.	Area Map Showing Facility Location: [X] Attached, Document ID: 1 [ ] Not Applicable [ ] Waiver Requested
2.	Facility Plot Plan: [X] Attached, Document ID: 2 [ ] Not Applicable [ ] Waiver Requested
3.	Process Flow Diagram(s): [X] Attached, Document ID: 3 [ ] Not Applicable [ ] Waiver Requested
4.	Precautions to Prevent Emissions of Unconfined Particulate Matter: [ ] Attached, Document ID: _____ [X] Not Applicable [ ] Waiver Requested

Facility Comment

Emissions Unit ID 001

III. EMISSIONS UNIT INFORMATION

A separate Emissions Unit Information Section must be completed for each emissions unit addressed in this Application for Non-Title V Air Permit Renewal. If submitting the form in hard copy, indicate, in the space provided at the top of each page, the Emissions Unit ID of the emissions unit addressed on the page, as given in the unit's most current air operation permit.

Emissions Unit Description and Status

1. Description of Emissions Unit Addressed in This Section (limit to 60 characters): EU-001 : SONAR DOME/COMPOSITE PARTS GRINDING	
2. Emissions Unit Status Code: A	3. Long-Term Reserve Shutdown Date:
4. Control Equipment Method/Description (limit to 200 characters per device or method): WET SCRUBBER HIGH EFFICIENCY (95.0-99.9%) / TRI-MER WHIRL/WET SCRUBBER, MODEL W/W-120 SINGLE CYCLONE DEVICES / STERNVENT CYCLONE DUST COLLECTOR, MODEL CYD 2407-A124	

Emissions Unit Operating Capacity and Schedule

1. Maximum Heat Input Rate: N/A		mmBtu/hr
2. Maximum Incineration Rate: N/A	lb/hr	tons/day
3. Maximum Process or Throughput Rate: 12000 CF/MIN		
4. Maximum Production Rate:		
5. Requested Maximum Operating Schedule:		
	hours/day	days/week
	weeks/year	8760 hours/year

Emissions Unit ID 001

Emissions Unit Supplemental Requirements

1.	Fuel Analysis or Specification [ ] Attached, Document ID:_____ [X] Not Applicable [ ] Waiver Requested
2.	Compliance Test Report [ ] Attached, Document ID:_____ [X] Not Applicable [ ] Previously submitted, Date:_____
3.	Procedures for Startup and Shutdown [ ] Attached, Document ID:_____ [X] Not Applicable [ ] Waiver Requested
4.	Operation and Maintenance Plan [X] Attached, Document ID: 4 [ ] Not Applicable [ ] Waiver Requested
5.	Other Information Required by Rule or Statute [ ] Attached, Document ID:_____ [X] Not Applicable

Emissions Unit Comment

Emissions Unit ID 003

III. EMISSIONS UNIT INFORMATION

A separate Emissions Unit Information Section must be completed for each emissions unit addressed in this Application for Non-Title V Air Permit Renewal. If submitting the form in hard copy, indicate, in the space provided at the top of each page, the Emissions Unit ID of the emissions unit addressed on the page, as given in the unit's most current air operation permit.

Emissions Unit Description and Status

1. Description of Emissions Unit Addressed in This Section (limit to 60 characters): EU-003 : SONAR DOME/COMPOSITE PARTS MANUFACTURING OPERATIONS	
2. Emissions Unit Status Code: A	3. Long-Term Reserve Shutdown Date:
4. Control Equipment Method/Description (limit to 200 characters per device or method): NO CONTROL EQUIPMENT	

Emissions Unit Operating Capacity and Schedule

1. Maximum Heat Input Rate: N/A			mmBtu/hr
2. Maximum Incineration Rate: N/A	lb/hr		tons/day
3. Maximum Process or Throughput Rate:			
4. Maximum Production Rate:			
5. Requested Maximum Operating Schedule:			
	hours/day		days/week
	weeks/year	8760	hours/year

Emissions Unit ID 003

Emissions Unit Supplemental Requirements

1.	Fuel Analysis or Specification [ ] Attached, Document ID:_____ [X] Not Applicable [ ] Waiver Requested
2.	Compliance Test Report [ ] Attached, Document ID:_____ [X] Not Applicable [ ] Previously submitted, Date:_____
3.	Procedures for Startup and Shutdown [ ] Attached, Document ID:_____ [X] Not Applicable [ ] Waiver Requested
4.	Operation and Maintenance Plan [ ] Attached, Document ID:_____ [X] Not Applicable [ ] Waiver Requested
5.	Other Information Required by Rule or Statute [ ] Attached, Document ID:_____ [X] Not Applicable

Emissions Unit Comment

Emissions Unit ID 006

III. EMISSIONS UNIT INFORMATION

A separate Emissions Unit Information Section must be completed for each emissions unit addressed in this Application for Non-Title V Air Permit Renewal. If submitting the form in hard copy, indicate, in the space provided at the top of each page, the Emissions Unit ID of the emissions unit addressed on the page, as given in the unit's most current air operation permit.

Emissions Unit Description and Status

1. Description of Emissions Unit Addressed in This Section (limit to 60 characters): EU-006 : COMPOSITE PARTS BLASTING	
2. Emissions Unit Status Code: A	3. Long-Term Reserve Shutdown Date:
4. Control Equipment Method/Description (limit to 200 characters per device or method): FABRIC FILTER LOW TEMPERATURE (T<180F)/HOFFMAN MODEL HDFT 3-18 DUST COLLECTOR	

Emissions Unit Operating Capacity and Schedule

1. Maximum Heat Input Rate: N/A			mmBtu/hr
2. Maximum Incineration Rate: N/A	lb/hr		tons/day
3. Maximum Process or Throughput Rate:	10580 CF/MIN		
4. Maximum Production Rate:			
5. Requested Maximum Operating Schedule:			
	hours/day		days/week
	weeks/year	8760	hours/year

Emissions Unit ID 006

Emissions Unit Supplemental Requirements

1.	Fuel Analysis or Specification [ ] Attached, Document ID:_____ [X] Not Applicable [ ] Waiver Requested
2.	Compliance Test Report [ ] Attached, Document ID:_____ [X] Not Applicable [ ] Previously submitted, Date:_____
3.	Procedures for Startup and Shutdown [ ] Attached, Document ID:_____ [X] Not Applicable [ ] Waiver Requested
4.	Operation and Maintenance Plan [X] Attached, Document ID: 4 [ ] Not Applicable [ ] Waiver Requested
5.	Other Information Required by Rule or Statute [ ] Attached, Document ID:_____ [X] Not Applicable

Emissions Unit Comment

Emissions Unit ID 007

III. EMISSIONS UNIT INFORMATION

A separate Emissions Unit Information Section must be completed for each emissions unit addressed in this Application for Non-Title V Air Permit Renewal. If submitting the form in hard copy, indicate, in the space provided at the top of each page, the Emissions Unit ID of the emissions unit addressed on the page, as given in the unit's most current air operation permit.

Emissions Unit Description and Status

1. Description of Emissions Unit Addressed in This Section (limit to 60 characters): EU-007 : COMPOSITE PARTS PAINTING	
2. Emissions Unit Status Code: A	3. Long-Term Reserve Shutdown Date:
4. Control Equipment Method/Description (limit to 200 characters per device or method): FABRIC FILTER LOW TEMPERATURE (T<180F)/DRY FILTERS	

Emissions Unit Operating Capacity and Schedule

1. Maximum Heat Input Rate: N/A			mmBtu/hr
2. Maximum Incineration Rate: N/A	lb/hr		tons/day
3. Maximum Process or Throughput Rate:	20 GAL/YR COATING		
4. Maximum Production Rate:			
5. Requested Maximum Operating Schedule:			
	hours/day		days/week
	weeks/year	8760	hours/year

Emissions Unit ID 007

Emissions Unit Supplemental Requirements

1. Fuel Analysis or Specification	[ ] Attached, Document ID:_____ [X] Not Applicable [ ] Waiver Requested
2. Compliance Test Report	[ ] Attached, Document ID:_____ [X] Not Applicable [ ] Previously submitted, Date:_____
3. Procedures for Startup and Shutdown	[ ] Attached, Document ID:_____ [X] Not Applicable [ ] Waiver Requested
4. Operation and Maintenance Plan	[ ] Attached, Document ID:_____ [X] Not Applicable [ ] Waiver Requested
5. Other Information Required by Rule or Statute	[ ] Attached, Document ID:_____ [X] Not Applicable

Emissions Unit Comment

JBI MODEL AT-20-PSB-S PAINT SPRAY BOOTH

Emissions Unit ID 008

III. EMISSIONS UNIT INFORMATION

A separate Emissions Unit Information Section must be completed for each emissions unit addressed in this Application for Non-Title V Air Permit Renewal. If submitting the form in hard copy, indicate, in the space provided at the top of each page, the Emissions Unit ID of the emissions unit addressed on the page, as given in the unit's most current air operation permit.

Emissions Unit Description and Status

1. Description of Emissions Unit Addressed in This Section (limit to 60 characters): EU-008 : BOILER NO.1, #2 FUEL OIL-FIRED	
2. Emissions Unit Status Code: A	3. Long-Term Reserve Shutdown Date:
4. Control Equipment Method/Description (limit to 200 characters per device or method): NO CONTROL EQUIPMENT	

Emissions Unit Operating Capacity and Schedule

1. Maximum Heat Input Rate:		14.5	mmBtu/hr
2. Maximum Incineration Rate: N/A	lb/hr		tons/day
3. Maximum Process or Throughput Rate:	107 GAL/HR FUEL OIL		
4. Maximum Production Rate: N/A			
5. Requested Maximum Operating Schedule:			
	hours/day		days/week
	weeks/year	8760	hours/year

Emissions Unit ID 008

Emissions Unit Supplemental Requirements

1.	Fuel Analysis or Specification [X] Attached, Document ID: 5 [ ] Not Applicable [ ] Waiver Requested
2.	Compliance Test Report [ ] Attached, Document ID:_____ [X] Not Applicable [ ] Previously submitted, Date:_____
3.	Procedures for Startup and Shutdown [ ] Attached, Document ID:_____ [X] Not Applicable [ ] Waiver Requested
4.	Operation and Maintenance Plan [ ] Attached, Document ID:_____ [X] Not Applicable [ ] Waiver Requested
5.	Other Information Required by Rule or Statute [ ] Attached, Document ID:_____ [X] Not Applicable

Emissions Unit Comment

FUEL OIL CERTIFICATES ATTACHED

Emissions Unit ID 009

III. EMISSIONS UNIT INFORMATION

A separate Emissions Unit Information Section must be completed for each emissions unit addressed in this Application for Non-Title V Air Permit Renewal. If submitting the form in hard copy, indicate, in the space provided at the top of each page, the Emissions Unit ID of the emissions unit addressed on the page, as given in the unit's most current air operation permit.

Emissions Unit Description and Status

1. Description of Emissions Unit Addressed in This Section (limit to 60 characters): EU-009 : BOILER NO. 2, #2 FUEL OIL-FIRED	
2. Emissions Unit Status Code: A	3. Long-Term Reserve Shutdown Date:
4. Control Equipment Method/Description (limit to 200 characters per device or method): NO CONTROL EQUIPMENT	

Emissions Unit Operating Capacity and Schedule

1. Maximum Heat Input Rate:		14.5	mmBtu/hr
2. Maximum Incineration Rate: N/A	lb/hr		tons/day
3. Maximum Process or Throughput Rate:	107 GAL/HR FUEL OIL		
4. Maximum Production Rate: N/A			
5. Requested Maximum Operating Schedule:			
	hours/day		days/week
	weeks/year	8760	hours/year

Emissions Unit ID 009

Emissions Unit Supplemental Requirements

1.	Fuel Analysis or Specification [X] Attached, Document ID: 5 [ ] Not Applicable [ ] Waiver Requested
2.	Compliance Test Report [ ] Attached, Document ID:_____ [X] Not Applicable [ ] Previously submitted, Date:_____
3.	Procedures for Startup and Shutdown [ ] Attached, Document ID:_____ [X] Not Applicable [ ] Waiver Requested
4.	Operation and Maintenance Plan [ ] Attached, Document ID:_____ [X] Not Applicable [ ] Waiver Requested
5.	Other Information Required by Rule or Statute [ ] Attached, Document ID:_____ [X] Not Applicable

Emissions Unit Comment

FUEL OIL CERTIFICATES ATTACHED

Attachment ID 1

Area Map Showing Facility Location

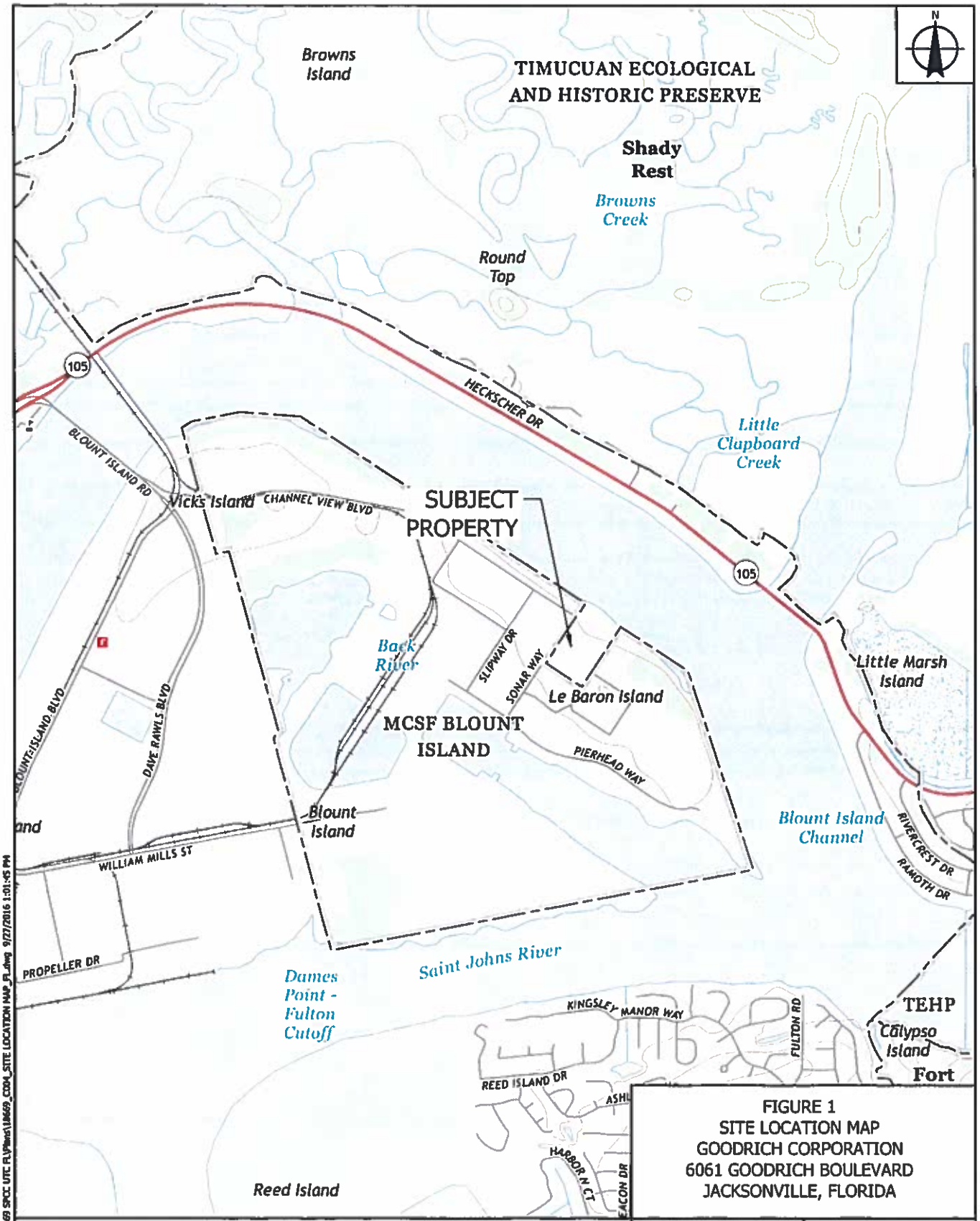

FIGURE 1
SITE LOCATION MAP
GOODRICH CORPORATION
6061 GOODRICH BOULEVARD
JACKSONVILLE, FLORIDA

0 1,000 2,000
SCALE IN FEET
COORDINATE SYSTEM: NAD 1983
UTM ZONE 17

REQUESTED BY:	AS
DRAWN BY:	CC
DATE:	09/27/2016
PROJECT:	0888818669

ENSAFE
Creative thinking. Custom solutions.
800.588.7962 | www.ensafe.com

DATA SOURCES: U.S. Geological Survey. Eastport Quadrangle, Florida [Map]. Photorevised 2015. 1:24,000. 7.5 Minute Series.

I:\CAD PROJECTS\18659 SPCC UTC FL\Plans\18659_CD04_SITE LOCATION MAP_FL.dwg 9/27/2016 1:01:45 PM

Attachment ID 2

Facility Plot Plan

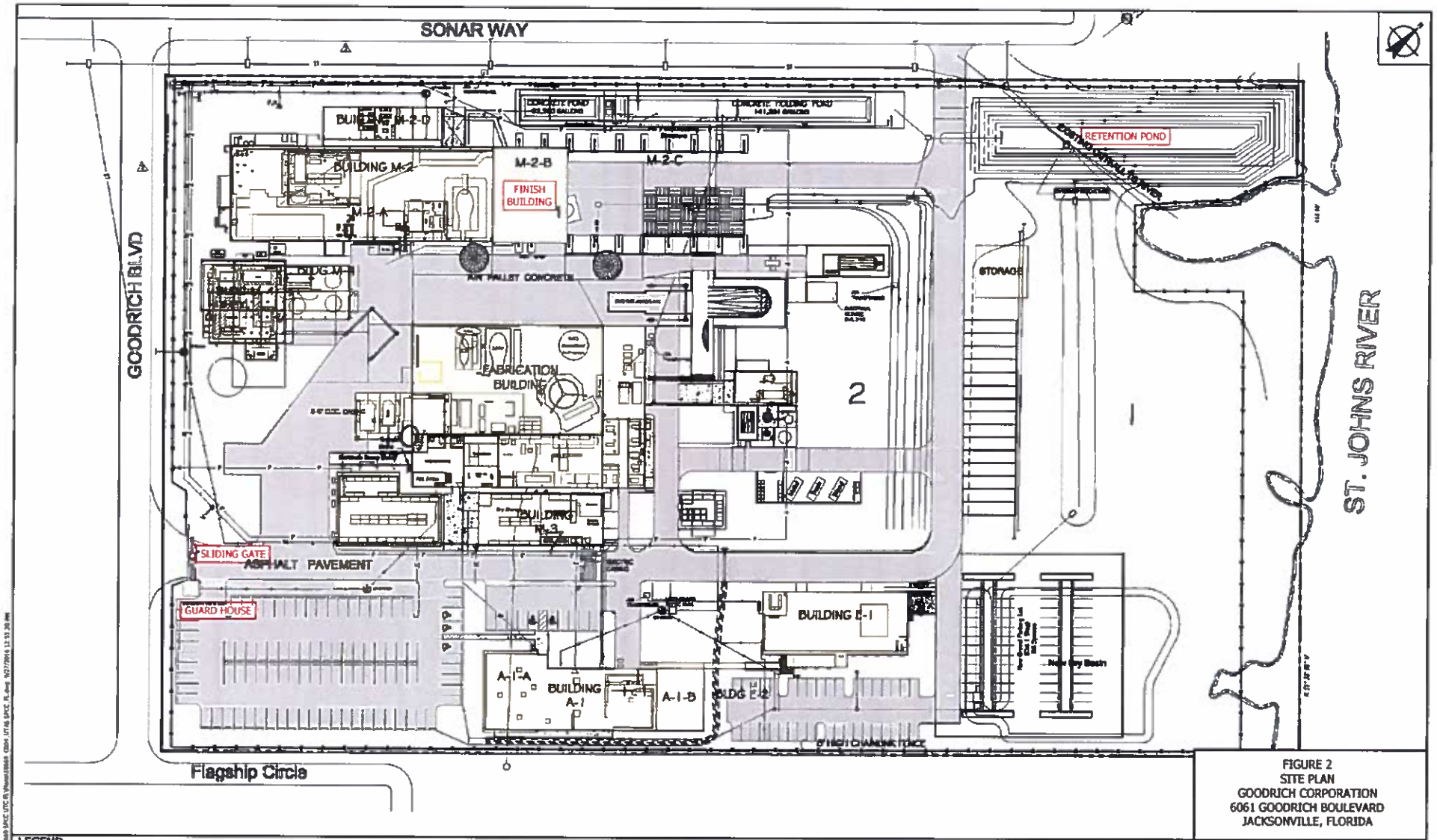

FIGURE 2
SITE PLAN
GOODRICH CORPORATION
6061 GOODRICH BOULEVARD
JACKSONVILLE, FLORIDA

LEGEND

CHAIN-LINK FENCE

ASPHALT

BUILDINGS

NOT TO SCALE

REQUESTED BY:	AS
DRAWN BY:	CC
DATE:	09/08/2016
PROJECT:	0888818669

ENSAFE

Attachment ID 3

Process Flow Diagram

Goodrich Corporation – Jacksonville, Florida
Process Flow Diagram
September 2016

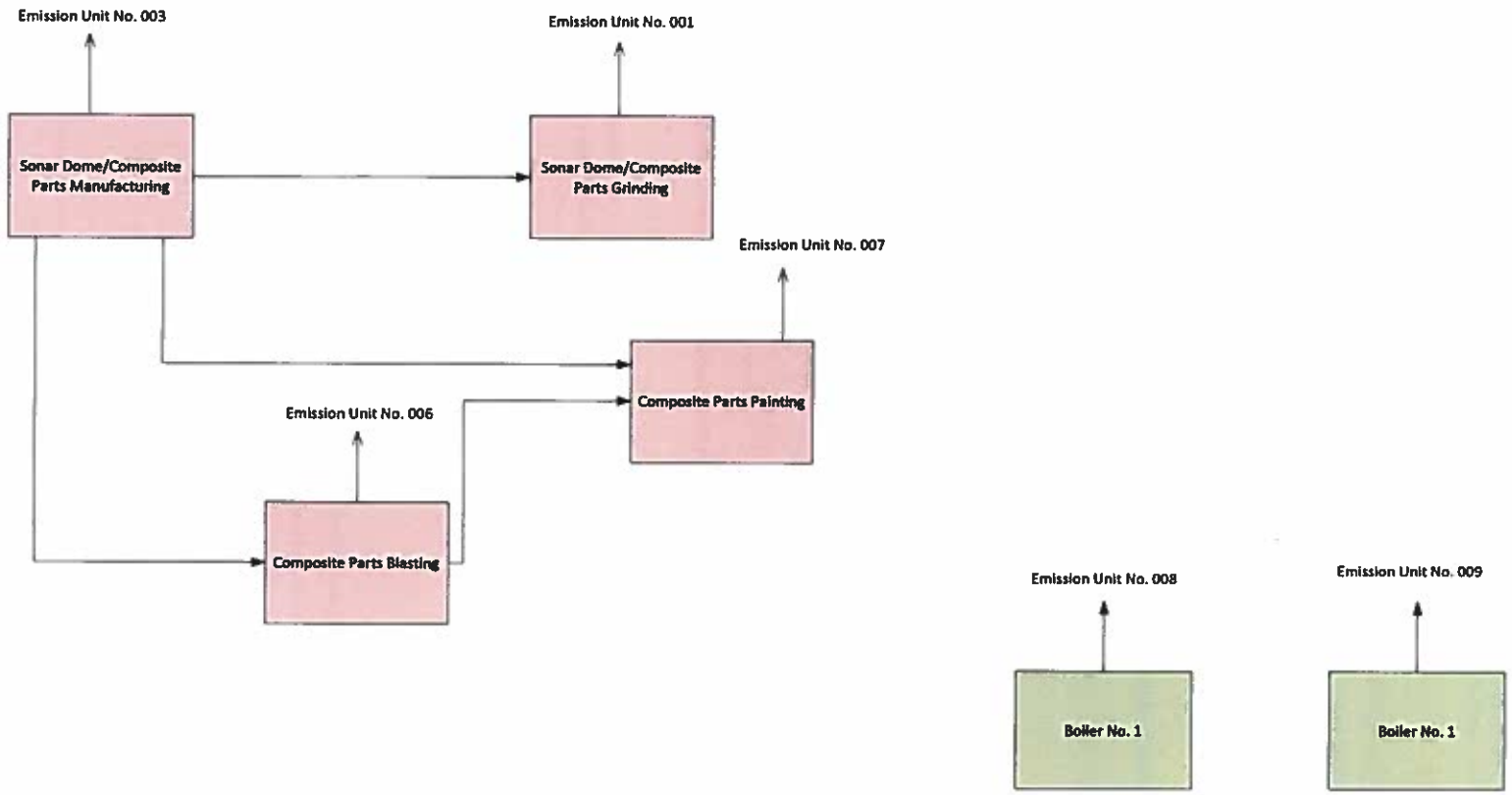

GOODRICH

This document or file contains no EAR Technology or ITAR Technical Data.

ENSAFE

Attachment ID 4

Operation and Maintenance Plan

Goodrich Corporation
6061 BFGoodrich Blvd.
Jacksonville, Fl 32226

Paint Booth

JBI Model AT-20-PSB-S, cross draft, dry filter spray booth. The equipment is designed for removal of particulate matter. The paint booth is located in the Finishing building.

Operating and Maintenance plan

The JBI Model AT-20-PSB – S cross draft paint spray booth is a dry filter booth designed for in/out materials processing. The booth is pressurized with a roof mounted air make-up unit. The unit is energized at the wall mounted 460 volt control panel which controls the fan and lights.

The airflow is measured with the Dweyer Mark II manometer. The dry filters are replaced as needed to assure proper airflow within the booth. When the airflow becomes restricted the alarm will sound, indicating the filters need to be changed. The paint booth operator is authorized to change the filters as needed.

The exhaust fan is scheduled for preventive maintenance & inspection four times per year. The belts will be inspected, tightened or replaced as needed. The fan is equipped with lubricating lines with grease fittings.

All lighting will be maintained as designed and needed.

All sheet metal and hinges will be maintained as designed and lubricated as needed.

Hoffman Grit Blast Booth

Preventive Maintenance Procedures

Equipment Location:	Finish Building
Installation:	August 2001

GOODRICH

Engineered Polymer Products
6061 Goodrich Blvd.
Jacksonville, Florida 32226

SECTION III. GENERAL MAINTENANCE PROCEDURES

1) Check elevator belt tracking once per week after it stabilizes. Check it daily for two (2) weeks after changing or adjusting.

2) Keep guards on chains.

3) Keep reducers half full of 90 wt. lubricant. Make sure reducer is lubed prior to startup.

4) Keep elevator belt tight enough to keep clanging to a minimum.

5) Only allow one individual to adjust slide gates. 1/4" slide gate adjustment is a mile. It takes time for results to surface.

6) Watch for wear areas. Add lining to prevent excessive maintenance and wear.

7) Keep full abrasive curtain. Set according to dimensions shown on Drawing AW-5A, outlined in SECTION IV. C – Rotary Screen Abrasive Separator)

8) Watch for bent screws.

9) Listen for squeaks and excessive scraping.

10) Watch screw positioning and make sure they do not shift in positioning. They will always shift in direction of abrasive origin. This is due to loose-set screws in bearings and/or extreme overloading.

11) Check rotary screen for clogging.

12) Check chain's tightness monthly.

13) Do not grease bearings. They are all slow in revolution and they are pre-lubricated and sealed for life.

14) Do not grease bearings. 87 RPM is maximum; 29 RPM is normal in reclaim system. Dust collector bearings require lubrication once every four months due to high RPM.

SECTION IV. MAINTENANCE ADJUSTMENTS AND REPLACEMENTS

A. ELEVATOR MODULE OPERATION, MAINTENANCE AND ADJUSTMENTS

ELEVATOR BOOT SECTION

1) Boot pulley must be rubber lagged.

2) Adjust boot pulley belt tracking by using shims between mounting angle bracket and pillow block bearing. Make sure you use shim plates. Do not use washers. This is necessary only when alignment problems exist.

3) Bearings are pre-lubricated and sealed for life.

4) Seal removable doors to minimize abrasive leakage.

5) Make sure elevator belt does not rub side walls of housing. It will usually favor one side.

6) Elevator Belt Installation:

   a) Hang belt (buckets facing proper direction).

   b) Attach stretching brackets to buckets each side of pulley.

   c) Stretch with "come along" until quite tight.

   d) Locate clamps square to belt and tighten to top of head pulley.

   e) Clamp with vice grips, etc.

   f) Drill and tighten two (2) or more bolts.

   g) Remove vise grips and finish drilling and bolting process.

   h) Trim off excess belt smooth with belt clamp belt face.

   i) Add buckets at regular intervals to fill in void.

   j) Make sure belt tension and tracking is set properly prior to operation.

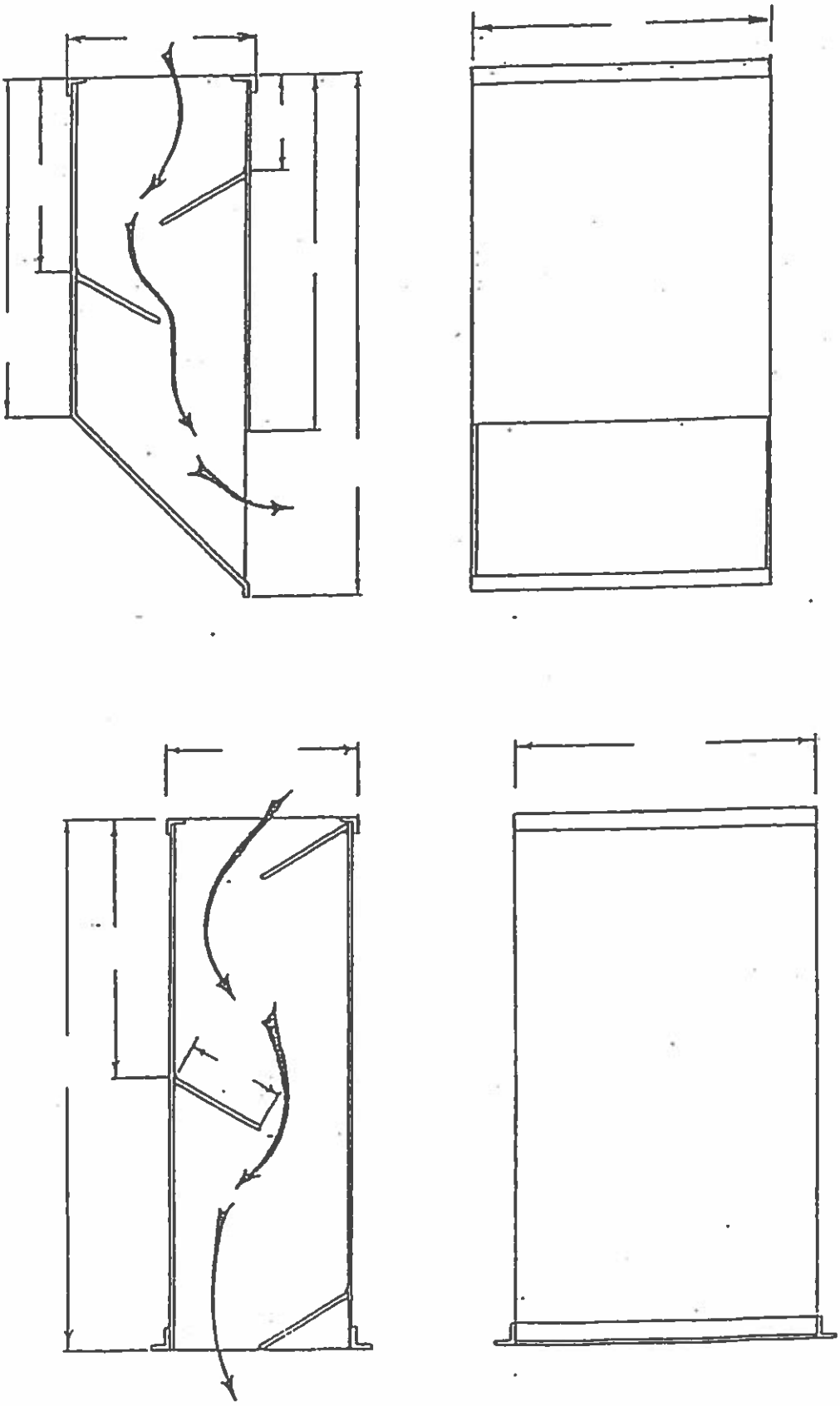

TYPICAL BAFFLED INLET PLENUM

FRONT ACCESS

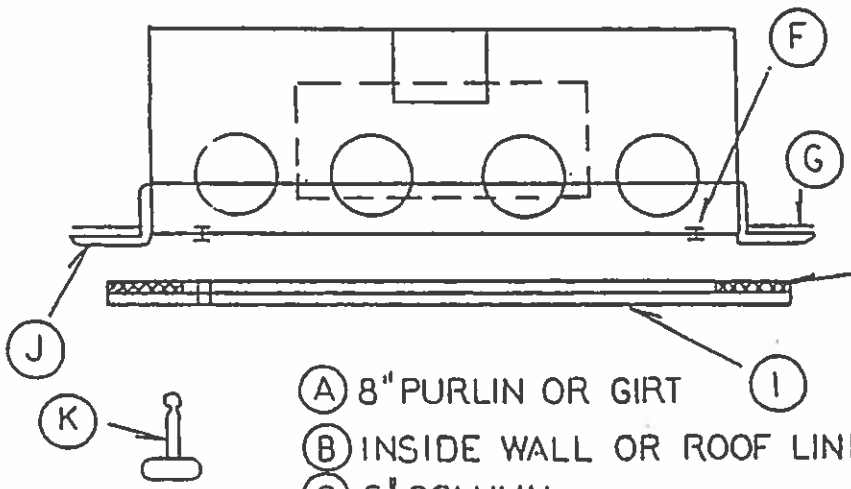

BACK ACCESS

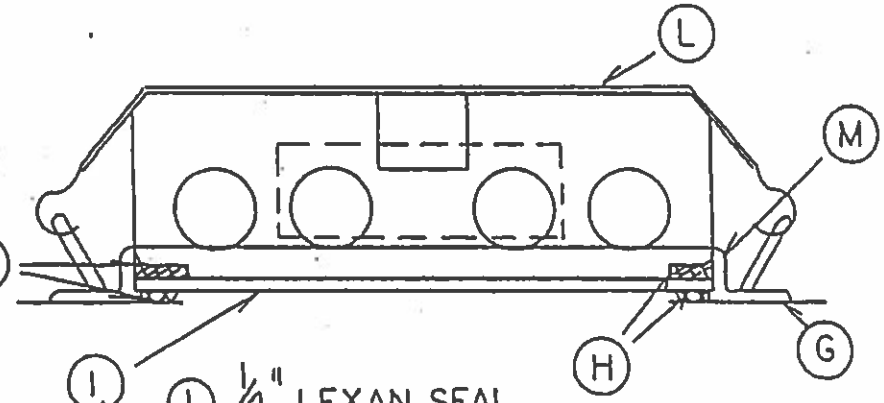

(A) 8" PURLIN OR GIRT
(B) INSIDE WALL OR ROOF LINING, 10 OR 14GA
(C) 6" COLUMN
(D) 2" USABLE SPACE
(E) OUTSIDE WALL AND ROOF, 26 GA.
(F) FASTENER CLIP
(G) 14 OR 10 GA.
(H) RUBBER SEAL
(I) ¼" LEXAN SEAL
(J) SOLID WELD
(K) FASTENER
(L) STRETCH FASTENER
(M) ANGLE FRAME

4 BULB CONCEPT AVAILABLE

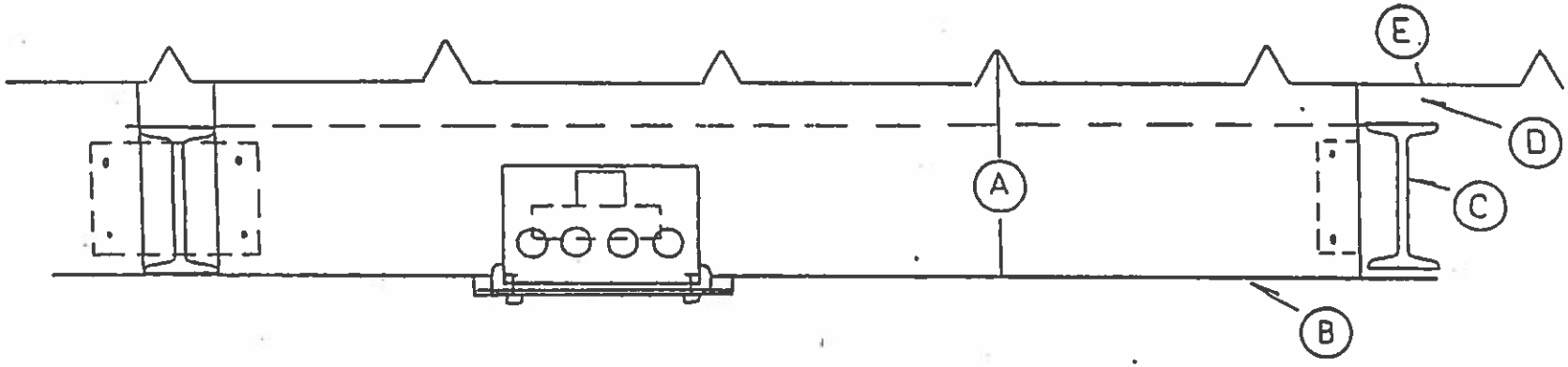

LIGHT FIXTURE DETAILS

B. ELEVATOR HEAD SECTION

1) Head pulley take-up controls both the belt tension and belt center in housing. This take-up is controlled by loosening or tightening the take-up bolts on each side of the head section from the top of the elevator.

2) The head pulley must be rubber lagged and crowned for proper operation. This pulley is solid.

3) Make sure that a 90 wt. gear box lubricant is used. New units usually require lubricant.

4) Make sure the elevator belt is centered in both the head and boot section of the elevator.

5) The take-up bolts control the head section belt center position.

6) If buckets constantly hit the elevator housing, the belt requires tightening.

7) Proper tension is the elimination of bucket housing clanging.

8) Make sure elevator is plumbed prior to start-up

9) Do not allow buckets to fall off elevator belts.

DRIVE UNITS (ALL)

1) Keep chains tight with adjustable device supplied with units or use half (1/2) links whenever feasible.

C. ROTARY SCREEN ABRASIVE SEPARATOR

1) Make sure no rubbing occurs with housing during operation.

2) Make sure it does not clog. Clean if such occurs.

3) Make sure adjustable baffle is located toward elevator side of separator.

4) Set adjustable baffle 3/8" above angle of repose of abrasive. Make sure it is parallel.

5) Set swing baffle so 1/4" to 3/16" clearance exists below bottom of baffle and separator lip. This distance is set according to abrasive size. Do not allow jams. Slop is better.

6) Make sure baffle hangs in vertical position.

7) Adjust abrasive in bucket to insure complete abrasive curtain.

8) Adjust slide gate behind separator to remove desired contamination and spent abrasive. Do not pull out excessive good abrasive.

9) Set bottom adjustable separator lip so that 1/2" exists between edge of falling abrasive and face of lip. This adjustment is very important and changes drastically with steel grit, walnut shells, black beauty, etc.

10) Check abrasive level each shift.

11) By making small abrasive additions each shift:

    a) Your cleaning remains constant.

    b) Your dust problems go away.

    c) Your product roughness or blast texture remain constant.

    d) You eliminate excessive machine wear.

12) Do not cover opening in front of separator.

When all of the above fail or if you need special assistance, please call HOFFMAN BLAST ROOM EQUIPMENT, INC. AT (972) 442-7199.

WE THANK YOU FOR YOUR BUSINESS!

HOFFMAN BLAST ROOM EQUIPMENT, INC.

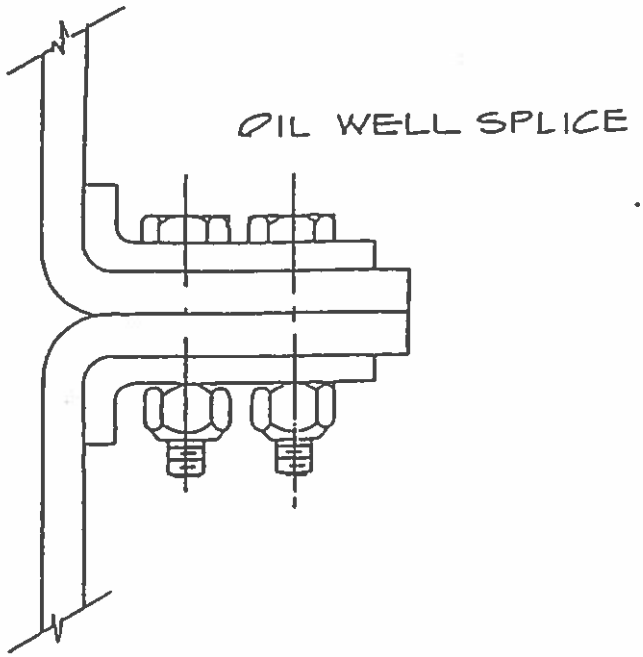

TYPICAL BELT SPLICE

HOFFMAN BLAST ROOM EQUIPMENT, INC.

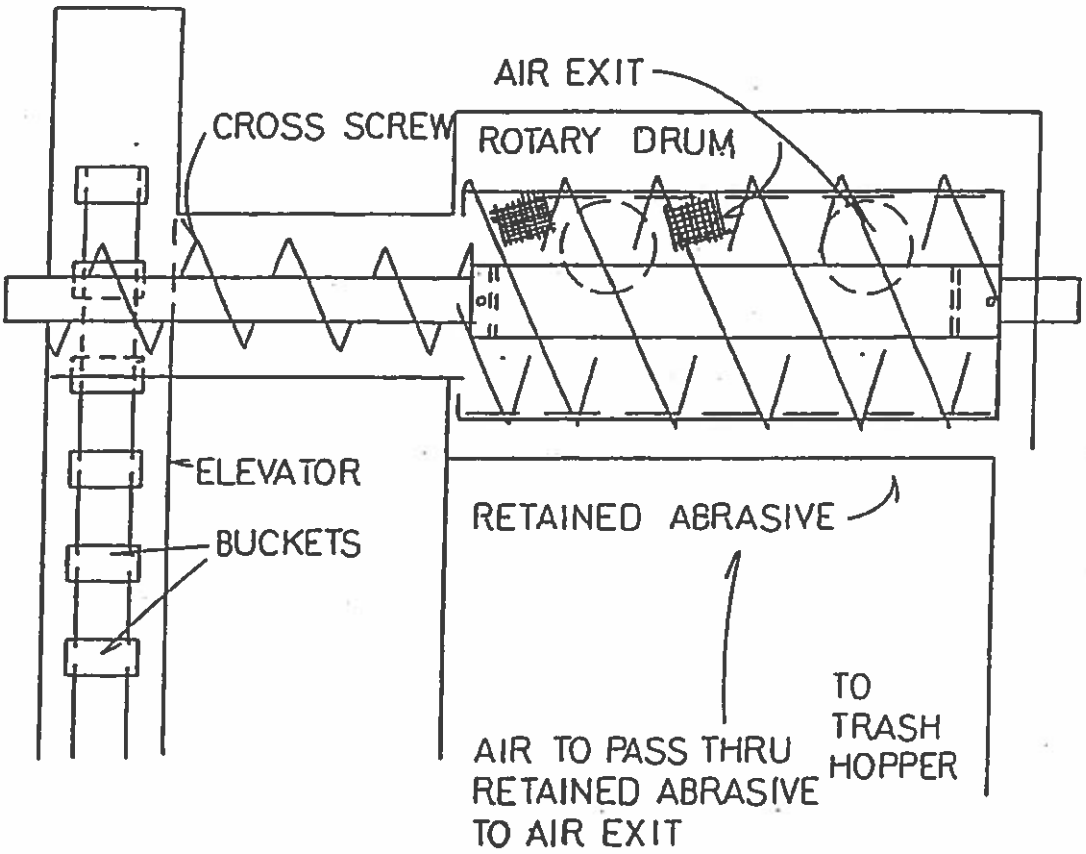

GRAVITY SEPARATOR WITH ROTARY DRUM

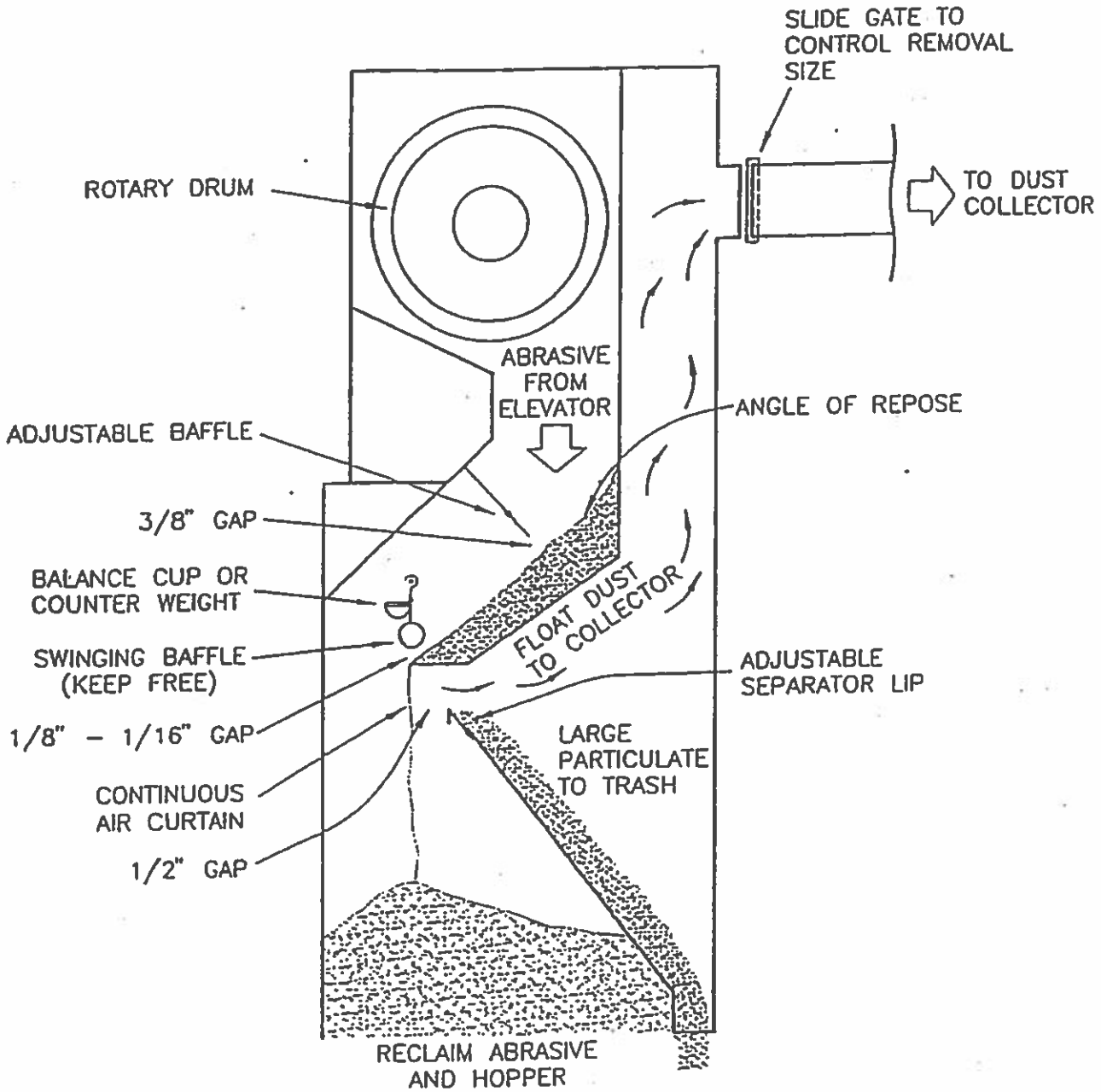

HOFFMAN BLAST ROOM EQUIPMENT, INC.	GRAVITY SEPARATOR DETAIL WITH PERFORATED ROTARY DRUM	DATE: FEBRUARY 1992	SCALE: NTS
		DRAWN BY: J.D.ZAPATA	DRAWING NO.: AW–5A

OPERATING TIPS

1) Make sure all shafts turn at start of elevator.

2) Listen for bucket clanging when running empty. If so, tighten.

3) Keep a full abrasive curtain. Air takes the path of least resistance. Your separator only functions properly with a full curtain.

4) Check trash screen as often as necessary. A clogged screen ruins an elevator belt.

5) NEVER push a reset button on the elevator starter. You can be assured that when a circuit breaker overloads on this unit, you have a problem. **FIND IT!**

When all of the above fail, or if you need special assistance, please call:

HOFFMAN BLAST ROOM EQUIPMENT, INC.
Wylie, Texas
(972) 442-7199

Donaldson
Torit

Installation and Operation Manual

Installation,
Operation, and
Service Information

Downflo® II

DFT 2-8, 2-12, 2-16, 2-24, 2-36
DFT 3-12, 3-24, 3-26, 3-48, 3-60, 3-72,
DFT 4-16, 4-32, 4-48, 4-64, 4-80, 4-96, 4-112, 4-128

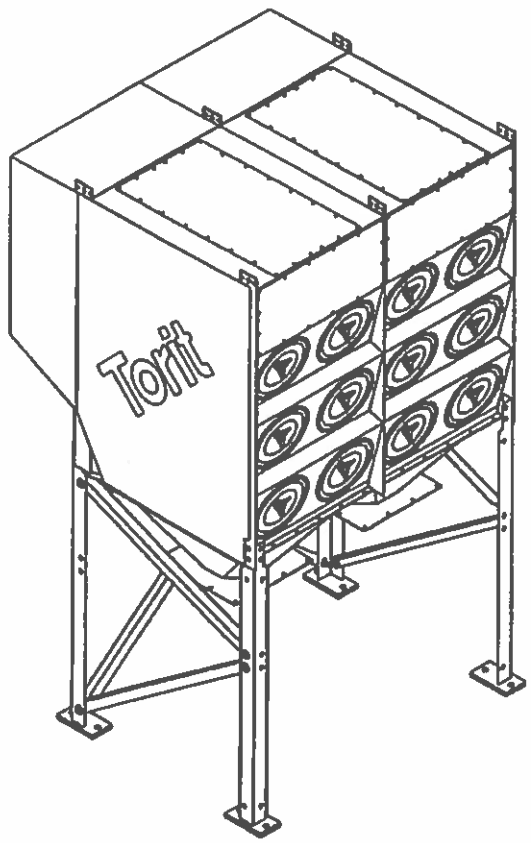

Throughout this manual statements indicating precautions necessary *to avoid equipment failure* are referenced in a **Note**. Statements indicating potential hazards that could result in *personal injury or property damage* are referenced in a **Caution!** box.

This manual is property of the owner. Leave with the unit when set-up and start-up are complete. Donaldson Company reserves the right to change design and specifications without prior notice.

IOM-42726-00
Revision 9

Caution!

Application of Dust Control Equipment

- Combustible materials such as buffing lint, paper, wood, aluminum or steel dust, weld fume, or flammable solvents represent fire or explosion hazards. Use special care when selecting and operating all dust or fume collection equipment when combustible materials are present to protect workers and property from damage due to fire and/or explosion. Consult and comply with National and Local Codes relating to fire or explosion and all other appropriate codes when determining the location and operation of dust or fume collection equipment.
- When combustible materials are present, consult with an installer of fire extinguishing systems familiar with these types of fire hazards and local fire codes for recommendations and installation of fire extinguishing and explosion protection systems. Donaldson dust collection equipment is not equipped with fire extinguishing or explosion protection systems.
- DO NOT allow sparks, cigarettes or other burning objects to enter the hood or duct of any dust or fume control equipment as these may initiate a fire or explosion.
- For optimum collector performance, use only Donaldson replacement parts.

Warning – Improper operation of a dust control system may contribute to conditions in the work area or facility that could result in severe personal injury and product or property damage. Check that all collection equipment is properly selected and sized for the intended use.

Data Sheet

Model Number _____ Serial Number _____

Ship Date _____ Installation Date _____

Customer Name _____

Address _____

_____

Filter Type _____

Accessories _____

Other _____

Contents

Data Sheet 2
Description 4
Purpose and Intended Use 4
Rating and Specification Information 5
Operation 6
Inspection on Arrival 7
Installation Codes and Procedures 7
Installation 7
Site Selection, Grade-Mounted Units 7
Site Selection, Ceiling-Mounted Units 7
Unit Location 7
Electrical Wiring 8
Rigging Instructions 8
Hoisting Information 8
Typical Installation 9
Standard Equipment 10
Field Assembly 10
Module Assembly 11
Deflector Plate, Yoke, Venturi, and Filter Installation 12
Hopper Installation 13
Leg Installation 14
Power Pack 16
Solid-State Timer Installation 18
Solenoid Connection 19
Timer and Solenoid Specifications 19
Delta P Control 20
Optional Settings 22
Delta P Control Calibration 22
Compressed Air Installation 22
Preliminary Start-Up 24
Service Information 24
Operational Checklist 24
Filter Installation and Replacement 24
Optional Bag-Out Filter Removal 26
Filter Replacement 27
Dust Disposal 27
Compressed Air Components 27
Optional Equipment 28
55-Gallon Drum Pack 28
Magnehelic® Gauge 30
Photohelic® Gauge 31
Transition and Rotary Valve 34
Damper and Silencer, TBI 35
Side and Top Mount 35
Chamber Silencer, TRB 36
Top Mount 36
Inlet Collar 36
Abrasion-Resistant Inlet Collar 37
Extended Dirty-Air Plenum 37
Air Management Module 38
Platforms and Ladders 38
Cold Climate Kit 41
Drum Sentry, Drum-Full Indicator 42
Troubleshooting 44
Service Notes 48
Warranty 52

Magnehelic® and Photohelic® are registered trademarks of Dwyer Instruments, Inc.

This manual contains specific precautionary statements relative to worker safety. Read thoroughly and comply as directed. Discuss the use and application of this equipment with a Donaldson representative. Instruct all personnel on safe use and maintenance procedures.

Description

The Downflo II dust collector is a continuous-duty, modular collector with cartridge-style filters. The downward airflow design delivers high filtration efficiency while using less energy. Continuous-duty means no downtime. The filters are pulse-cleaned in sequence, one set at a time, without turning the unit off. The modular design allows flexibility in system design and adapts easily to limited space areas. Each standard module is two or three filter rows wide by two, three, or four rows high by two filters deep.

Designed to increase the versatility of the unit, standard options include abrasion-resistant inlets, extended dirty-air plenums, and air management modules. Quick-removal access covers, the Drum Sentry™, Bag-Out, cold-climate kits, and steep-sided ledge-free hoppers are among the many options available to customize the Downflo II to the specific application.

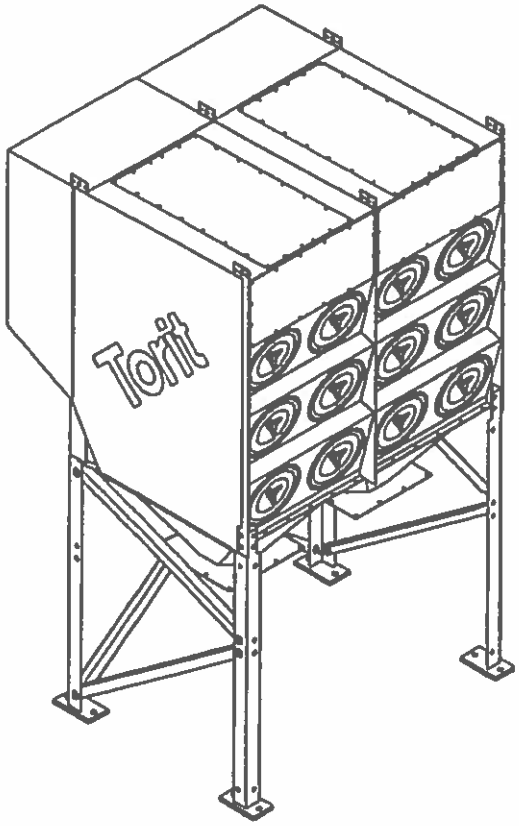

DFT 2-24

Purpose and Intended Use

Downflo II collectors are widely used on nuisance dust where the load to the collector is less than two grains per cubic foot. Some typical applications include abrasive blasting, grinding, pharmaceuticals, powder paint applications, sand handling, and welding. Each application is different and selecting the correct filter cartridge for the application and type of dust collected is important.

- For all ambient, extremely fine, and non-fibrous dust, use Ultra Web® filter cartridges which offer high efficiency and performance on fine particulate.
- For fibrous dust, use a cartridge with an open-pleat design, such as Fibra-Web®.
- Operations involving high temperature and high humidity may require special attention. Temperature, moisture content, and chemistry issues may require custom collector design. Appropriate cartridge options are available from Donaldson.
- Hygroscopic dust such as fertilizer, salt, and sugar should be handled under a controlled, low humidity environment. Contact Donaldson for filter cartridge selection.
- Flammable or explosive dust may require custom collector design options and special cartridges. Contact Donaldson for design assistance.
- Applications with high hydrocarbon or high oil content may require special treatment or filter media.

Caution!

- Misuse or modification of this equipment may result in personal injury.
- Do not misuse or modify.

Rating and Specification Information

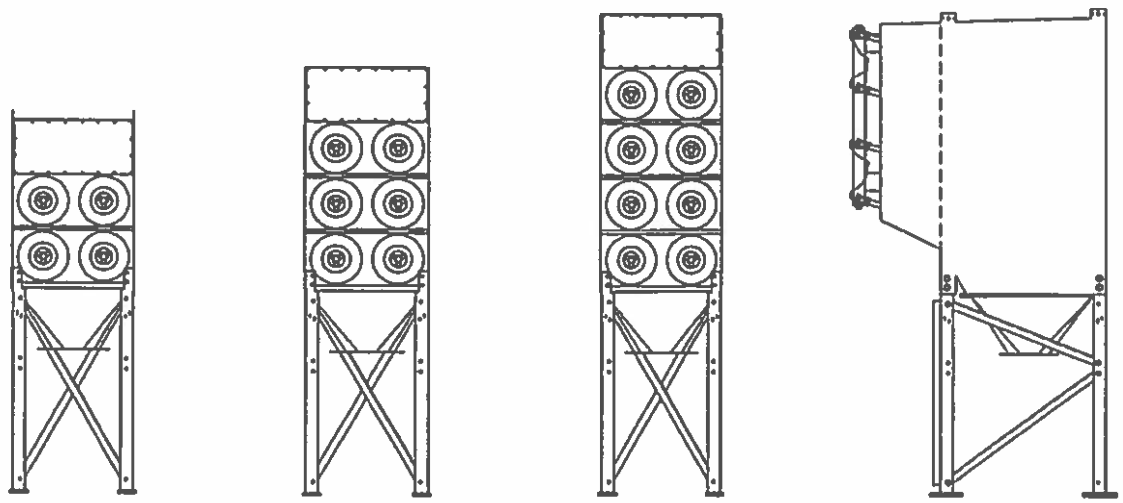

DFT 2-Models DFT 3-Models DFT 4-Models DFT Side View

Model	Number of Filters	EZ Ultra-Web® II Filter Area, sq. ft.	Number of Valves	Shipping Weight, lbs
DFT 2-4	4	1,016	4	477
DFT 2-8	8	2,032	4	813
DFT 2-12	12	3,048	6	1,046
DFT 2-16	16	4,064	8	1,348
DFT 2-24	24	6,096	12	1,766
DFT 2-36	36	9,144	18	2,565
DFT 3-6	6	1,524	6	591
DFT 3-12	12	3,048	6	990
DFT 3-24	24	6,096	12	1,594
DFT 3-36	36	9,144	18	2,202
DFT 3-48	48	12,192	24	2,883
DFT 3-60	60	15,240	30	3,491
DFT 3-72	72		36	4,091
DFT 4-16	16	4,064	8	2,510
DFT 4-32	32	8,128	16	4,045
DFT 4-48	48	12,192	24	5,605
DFT 4-64	64	16,256	32	8,340
DFT 4-80	80	20,320	40	9,480
DFT 4-96	96	24,384	48	11,135
DFT 4-112	112	28,448	56	13,065
DFT 4-128	128	32,512	64	14,715

All Units

Seismic rating ..... Zone 4
Wind load, mph 100
Compressed air, psi 90-100
Housing rating, "wg ..... +-20
Power, valves and controls .. 120-Volt AC, 50/60 Hz

Operation

During normal operation, dust-laden air enters the unit through the dirty-air inlet. Airflow is directed downward through the collector and heavier particulate falls directly into the hopper. The cartridges remove fine particulate and clean filtered air passes through the cartridges to the clean-air chamber and discharges through the clean-air outlet.

Filter cleaning is completed using pulse-jet technology. A solenoid and diaphragm valve aligned to each row of filters provides the pulse cleaning. The cleaning sequence starts at the top filter row and continues down through each row. Remove, inspect, or change the cartridges from outside the unit by removing the filter access cover and sliding the filters out.

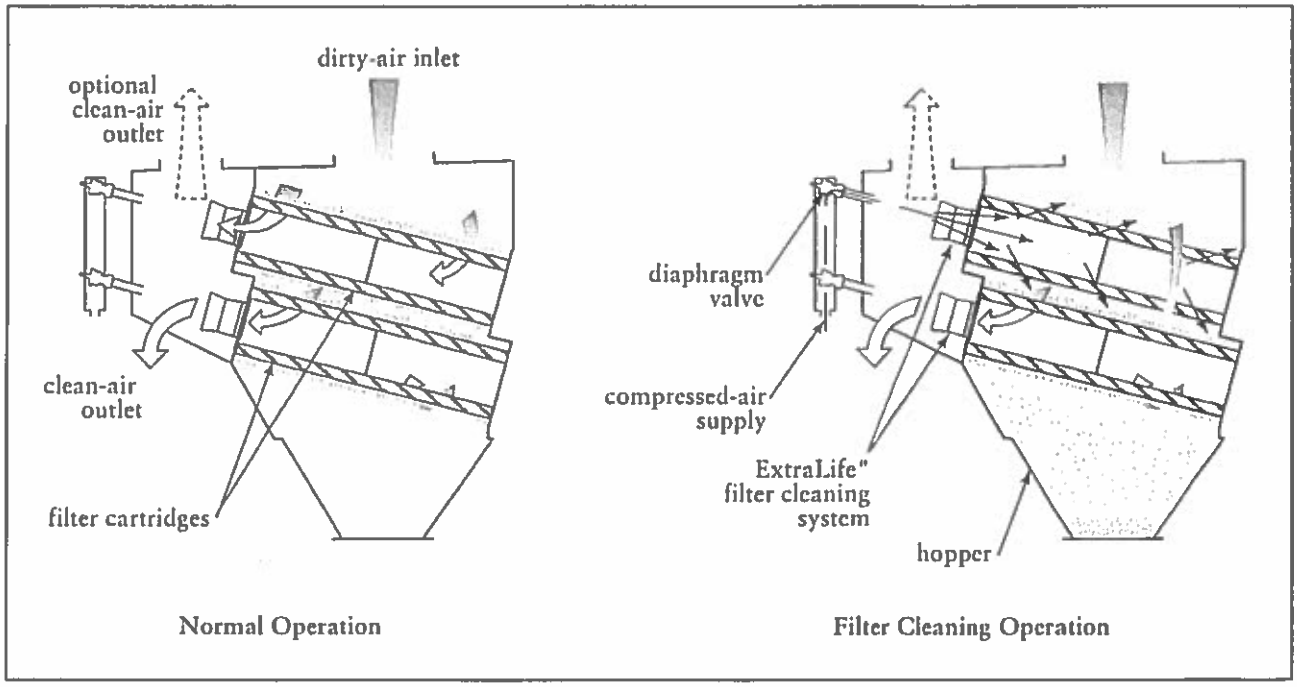

Unit Operation

Caution!

- Combustible materials such as buffing lint, paper, wood, aluminum or steel dust, weld fume, and flammable solvents represent fire or explosion hazards.
- Use special care when selecting and operating all collection equipment when combustible materials are present to protect workers and property from damage due to fire and/or explosion.
- Consult and comply with all National and Local Codes relating to fire or explosion, and all other appropriate codes when determining the location and operation of dust collection equipment.
- Donaldson equipment is *not* equipped with fire extinguishing or explosion protection systems.

Inspection on Arrival

1. Inspect unit on delivery.
2. Report any damage to the delivery carrier.
3. Request a written inspection report from the Claims Inspector to substantiate claim.
4. File claims with the delivery carrier.
5. Compare unit received with description of product ordered.
6. Report incomplete shipments to the delivery carrier and your Donaldson representative.
7. Remove crates and shipping straps. Remove loose components and accessory packages before lifting unit from truck.

Installation Codes and Procedures

Caution!

OSHA may have requirements regarding recirculating filtered air in your facility. Consult with the appropriate local authorities to ensure compliance with all codes regarding recirculating filtered air.

1. Safe and efficient operation of the unit depends on proper installation.
2. Authorities with jurisdiction should be consulted before installing to verify local codes and installation procedures. In the absence of such codes, install unit according to the National Electric Code, NFPA No. 70-latest edition.
3. A qualified installation and service agent must complete installation and service of this equipment.

Installation

Site Selection, Grade-Mounted Units

1. The unit can be located on a reinforced concrete foundation or rooftop.
2. Wind, seismic zone, and other live-load conditions must be considered when selecting the location for rooftop-mounted units. Reference the Specification and Rating Information on Page 5.
3. Provide clearance from heat sources and interference with utilities when selecting the location for grade-mounted units. Reference the Specification and Rating Information on Page 5.
4. Portable units require no special installation accommodations.

   Note: Units with explosion vents are not available in portable configurations.

Site Selection, Ceiling-Mounted Units

1. The unit can be suspended or hung from overhead supports. The supports must be adequate to carry the live load of the unit and installation performed to reduce sway or vibration to the unit.
2. Provide clearance from heat sources and interference with utilities when selecting the location for suspended units. Reference the Specification and Rating Information on Page 5.

Unit Location

1. When hazardous conditions or materials are present, consult with local authorities for the proper location of the collector.
2. Foundation or roof support must be sized to accommodate the entire weight of the unit, plus the weight of the collected material, piping, and ductwork. Reference the Specification and Rating Information on Page 5.
3. Prepare the foundation in the selected location. Install anchor bolts to extend a minimum of 1 3/4-inches above foundation unless otherwise indicated on the Specification Control drawing.
4. Locate the collector to ensure the shortest and straightest inlet- and outlet-duct length, easy access to electrical and compressed-air connections, and routine maintenance.

Electrical Wiring

1. All electrical wiring and connections, including electrical grounding, should be made in accordance with the National Electric Code, NFPA No. 70-latest edition.
2. Check local ordinances for additional requirements that apply.
3. The appropriate wiring schematic and electrical rating must be used. See unit's rating plate for required voltage.
4. If the unit is not furnished with a factory-mounted disconnect, an electric disconnect switch having adequate amp capacity shall be installed in accordance with Part IX, Article 430 of the National Electric Code, NFPA No. 70-latest edition. Check unit's rating plate for voltage and amperage ratings.
5. Refer to the wiring diagram for the number of wires required for main power wiring and remote wiring.

Caution!

- Electrical installation must be performed by a qualified electrician and comply with all applicable national and local codes.
- Lock out electrical power sources before performing service or maintenance work.
- Do not install in classified hazardous atmospheres without an enclosure rated for the application.

Rigging Instructions

Suggested Tools & Equipment

Clevis Pins and Clamps	Lifting Slings
Crane or Forklift	Pipe Sealant
Drift Pins	Pipe Wrenches
Drill and Drill Bits	Screwdrivers
End Wrenches	Socket Wrenches
Large Crescent Wrench	Spreader Bars

Hoisting Information

1. Use all lifting points provided.
2. Use clevis connectors, *not hooks*, on lifting slings.
3. Use spreader bars to prevent damage to unit's casing.
4. Check the Specification Control drawing for weight and dimensions of the unit, subassemblies, and components to ensure adequate crane capacity.
5. Allow only qualified crane operators to lift the equipment.
6. Refer to applicable OSHA regulations and local codes when using cranes, forklifts, and other lifting equipment.
7. Lift unit and accessories separately, and assemble after unit is in place.
8. Use drift pins to align holes in section flanges during assembly.

Caution!

- Failure to lift the collector correctly can result in severe personal injury or property damage.
- Use appropriate lifting equipment and adopt all safety precautions needed for moving and handling the equipment.
- A crane or forklift is recommended for unloading, assembly, and installation of the collector.
- Location must be clear of all obstructions, such as utility lines or roof overhang.

Typical Installation

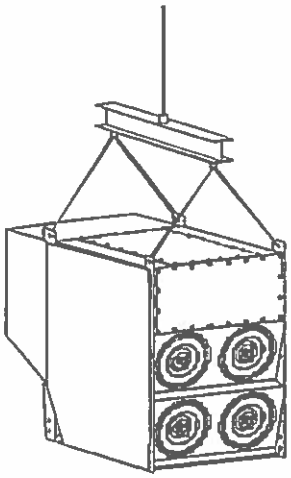

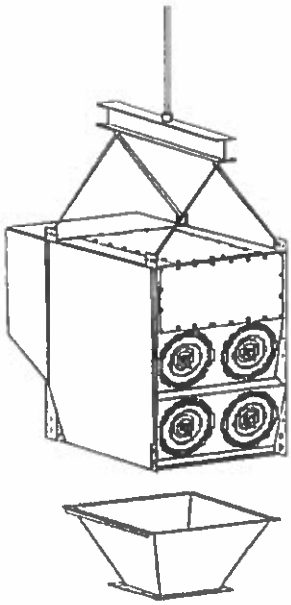

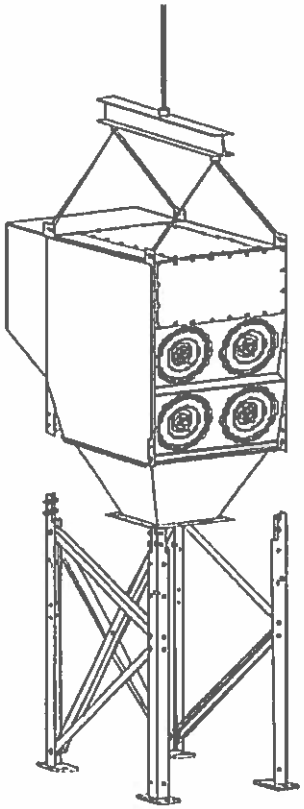

1. Lift cabinet.
2. Apply sealant to hopper flange.
3. Fasten hopper to cabinet.

4. Assemble legs and cross braces.
5. Lift unit and hopper into position over legs and lower slowly.
6. Fasten legs to unit securely.

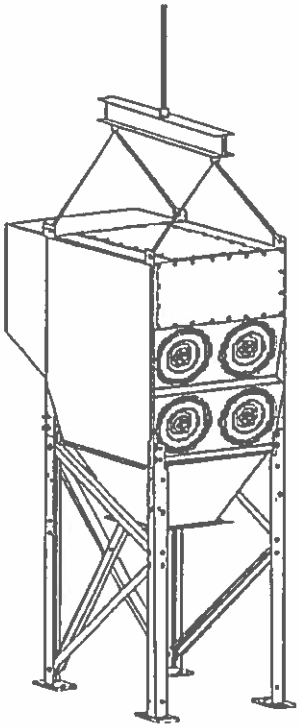

7. Lift assembled unit to location.
8. Support and level unit.
9. Tighten all fasteners.
10. Remove crane.

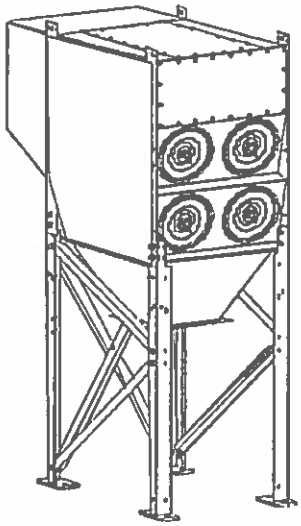

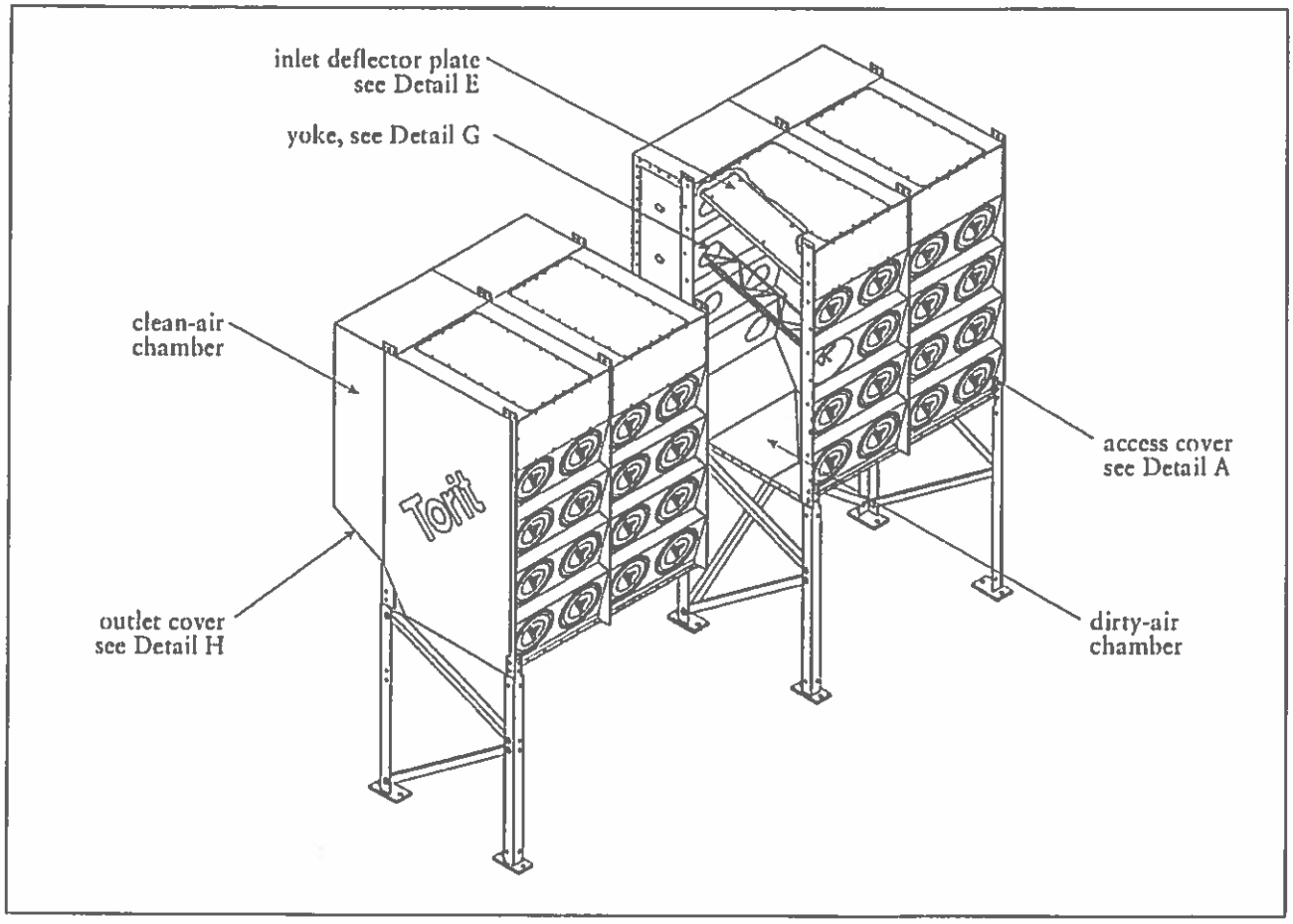

Module Assembly

Standard Equipment

Standard equipment consists of modules, inlet deflectors, yokes, filters, hoppers, and legs. Single-module through six-module units are delivered with the inlet deflectors, yokes, and filters factory installed.

Field Assembly

Field assembly of modules may be required due to truck capacity, crane capacity, or specific customer requirements. A detailed instruction drawing, shipped with each module, provides specific assembly and lifting instructions.

If unit has been shipped with fully-assembled modules, skip to Hopper Installation on Page 13.

Caution!

- Failure to lift the collector correctly can result in severe personal injury or property damage.
- Use appropriate lifting equipment and adopt all safety precautions needed for moving and handling the equipment.

Module Assembly

Note: Two cranes are required to lift and assemble modules.

1. Remove the protective cover from the end of each module.
2. Remove one column of access covers, filters, venturis, yokes, and deflector panels from the joint-side of each module. See Detail A.
3. Remove outlet cover from the bottom of the clean-air chamber and set aside.
4. Apply a generous amount of sealant to one module to create an airtight seal between the clean and dirty-air chambers as shown in Detail B.
5. Lift both modules into position using two cranes.
6. Use drift pins to align the bolt holes in the mating flanges.
7. Bolt the modules together using 1/2-13 and 3/8-16 x 1 1/4-in bolts, washers, and nuts as shown Details B, C, and D. *Do not tighten hardware at this time.*
8. Check that all joints and flanges are flush and tighten hardware starting with the joint between the clean- and dirty-air chambers.

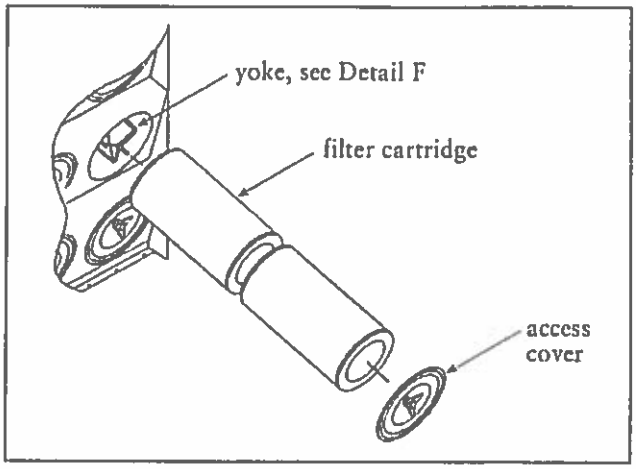

Detail A

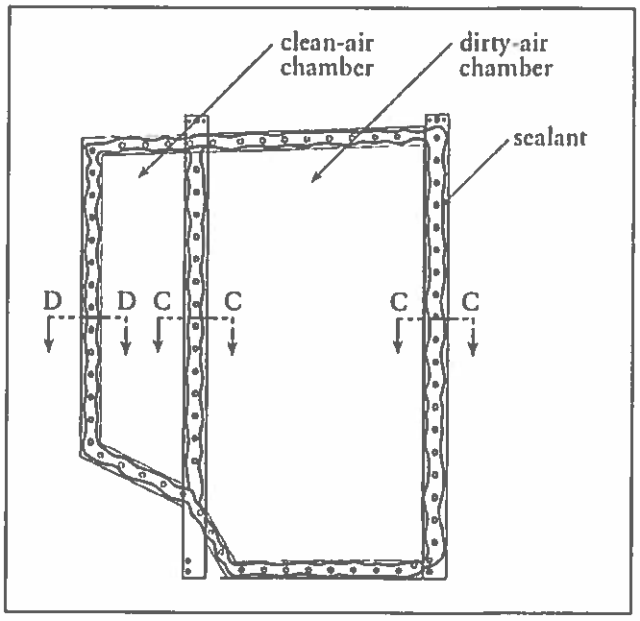

Detail B

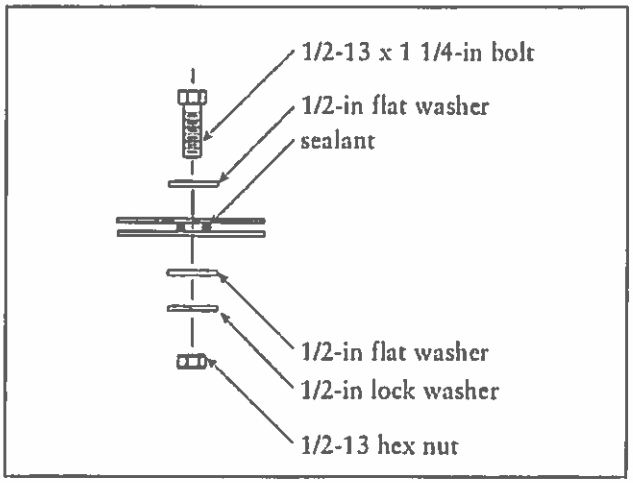

Detail C

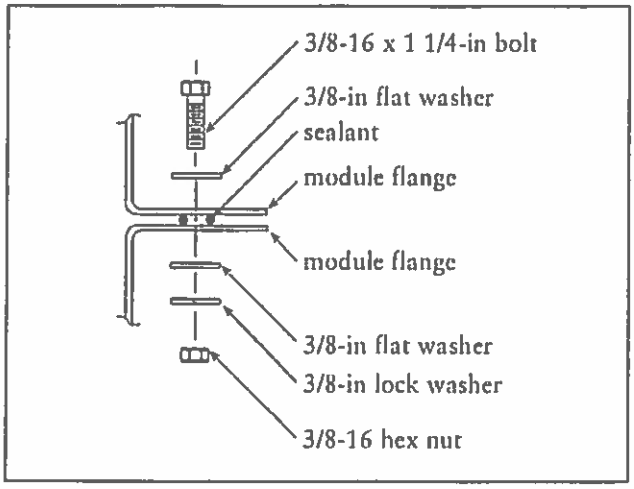

Detail D

Deflector Plate, Yoke, Venturi, and Filter Installation

Notes: 1. Installing yokes requires two people.

2. Place blocks under assembled modules during yoke and filter installation.

1. Thread a thin jam-nut on each of the three yoke rod ends to the shoulder. See Detail F and G.
2. Start at the bottom access port and work upward. Position the yoke as shown in Detail F. From the filter section, have one person hold the yoke in position while another person installs the venturi and hardware from the clean-air chamber. See Detail G. *Do not tighten hardware at this time.*
3. Center the yoke from side-to-side horizontally and 1/4-in above center vertically. See Detail F. Adjust jam nut against the filter cartridge panel. Have one person hold the yoke in position while another person tightens the three hex nuts from the clean-air chamber. Repeat to install all yokes.
4. Attach deflector plates to the support angles using 3/8-16 x 1 1/4-in bolts, washers, and nuts as shown in Detail E.
5. Slide the filter cartridge on the yoke gasket-end first. Replace access cover and tighten securely by hand. Repeat for all filter cartridges.
6. Replace the outlet cover on the bottom of the clean-air chamber. See Detail H.

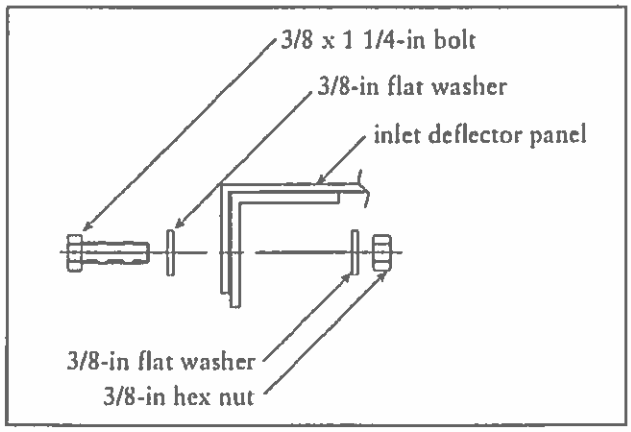

Detail E

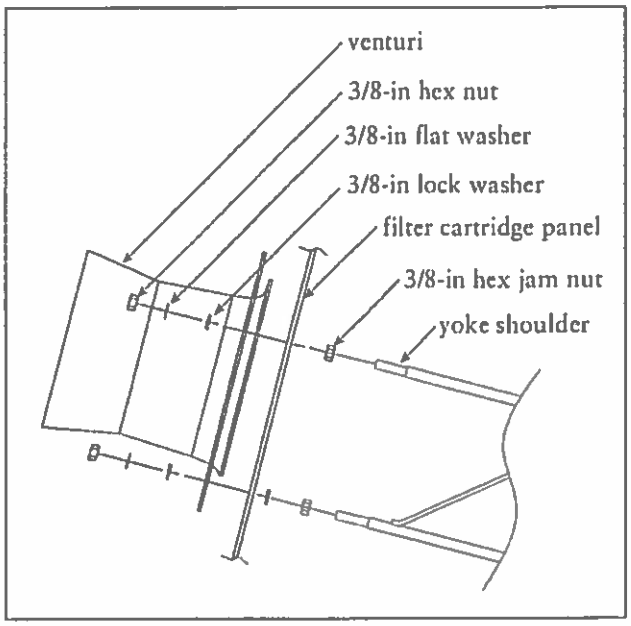

Detail G

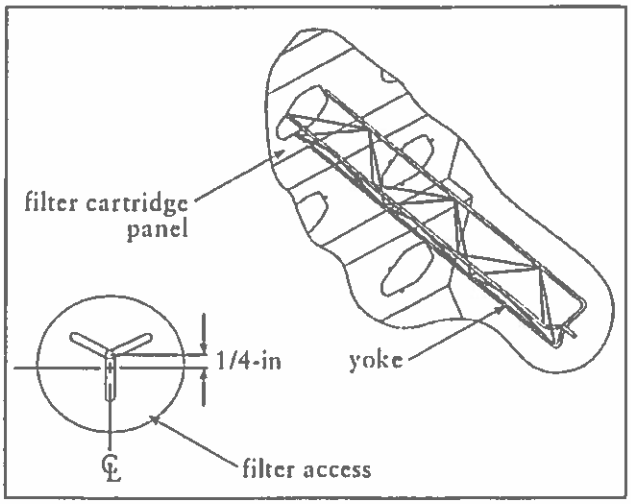

Detail F

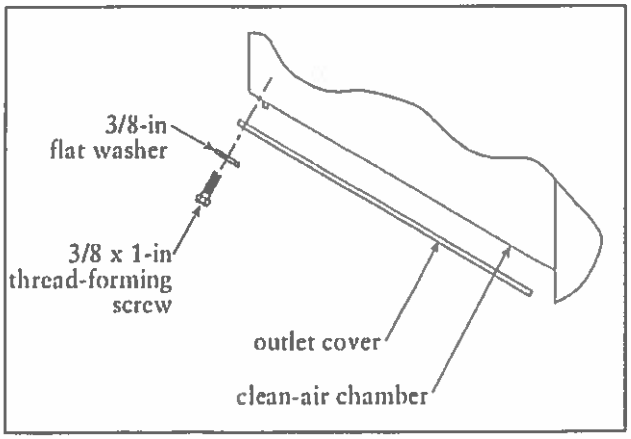

Detail H

Hopper Installation

There are four hopper styles offered for the Downflo II. A single-module wide that spans two portholes; a single-module wide that spans three portholes; a double-module wide spanning four portholes; and a taller, steeper, single-module wide module which spans two portholes. All styles transition to a single, 14-inch octagon discharge.

1. Stand the hopper on the discharge end.
2. Apply sealant around the top flange toward the inside edge of the bolt pattern.
3. Lift the collector and position over the hopper and lower *slowly*.
4. Use drift pins to align holes.
5. Secure collector to hopper using 3/8-16 x 1 1/4-in bolts, flat washers, and nuts. Tighten all hardware securely. See Hopper Installation.

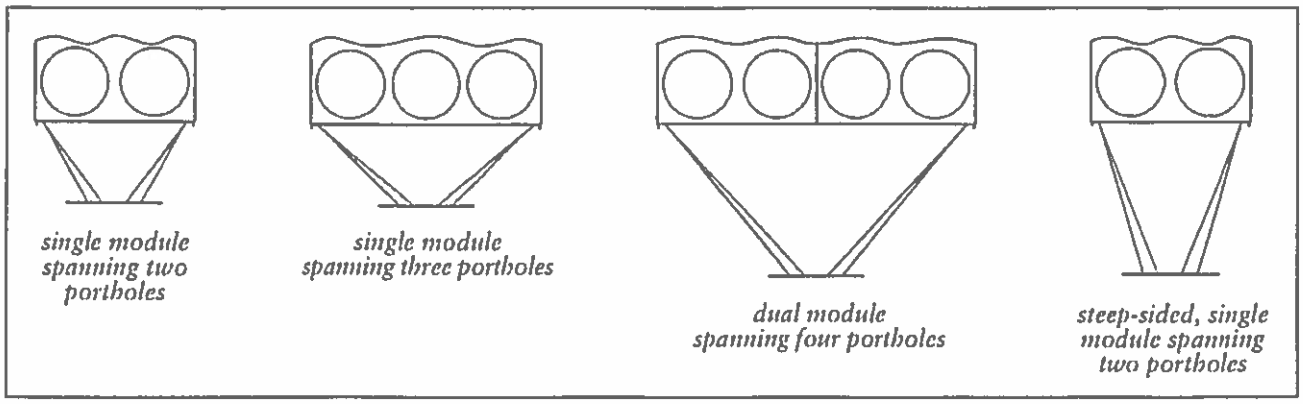

Hopper Styles

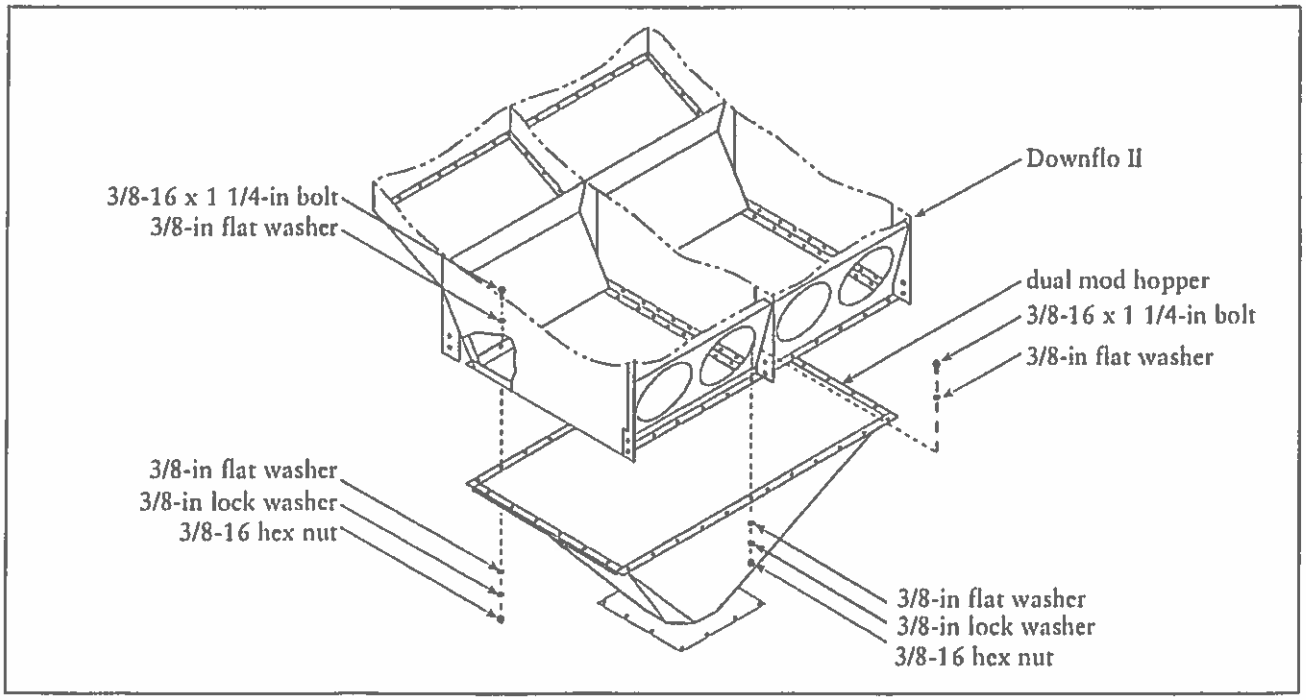

Hopper Installation

Leg Installation

Leg sets are designed for standard height collectors and are rated Seismic Zone 4. Reference the drawing shown below and the leg assembly drawing shipped with the leg set for proper location and assembly.

1. Position and assemble legs and cross braces as shown in Leg and Cross Brace Assembly.
2. Lift the cabinet and hopper assembly into position over the legs and lower *slowly*.
3. Use drift pins to align the holes in the collector with the holes in the legs. Attach each leg with 3/4-10 x 1 3/4 or 2 1/2-in bolts, washers, and nuts. ***Do not tighten hardware at this time.***
4. Use drift pins to align the holes in the cross braces to the back of the leg set. Attach using 3/4-10 x 1 3/4-in bolts, washers, and nuts. ***Do not tighten hardware at this time.***

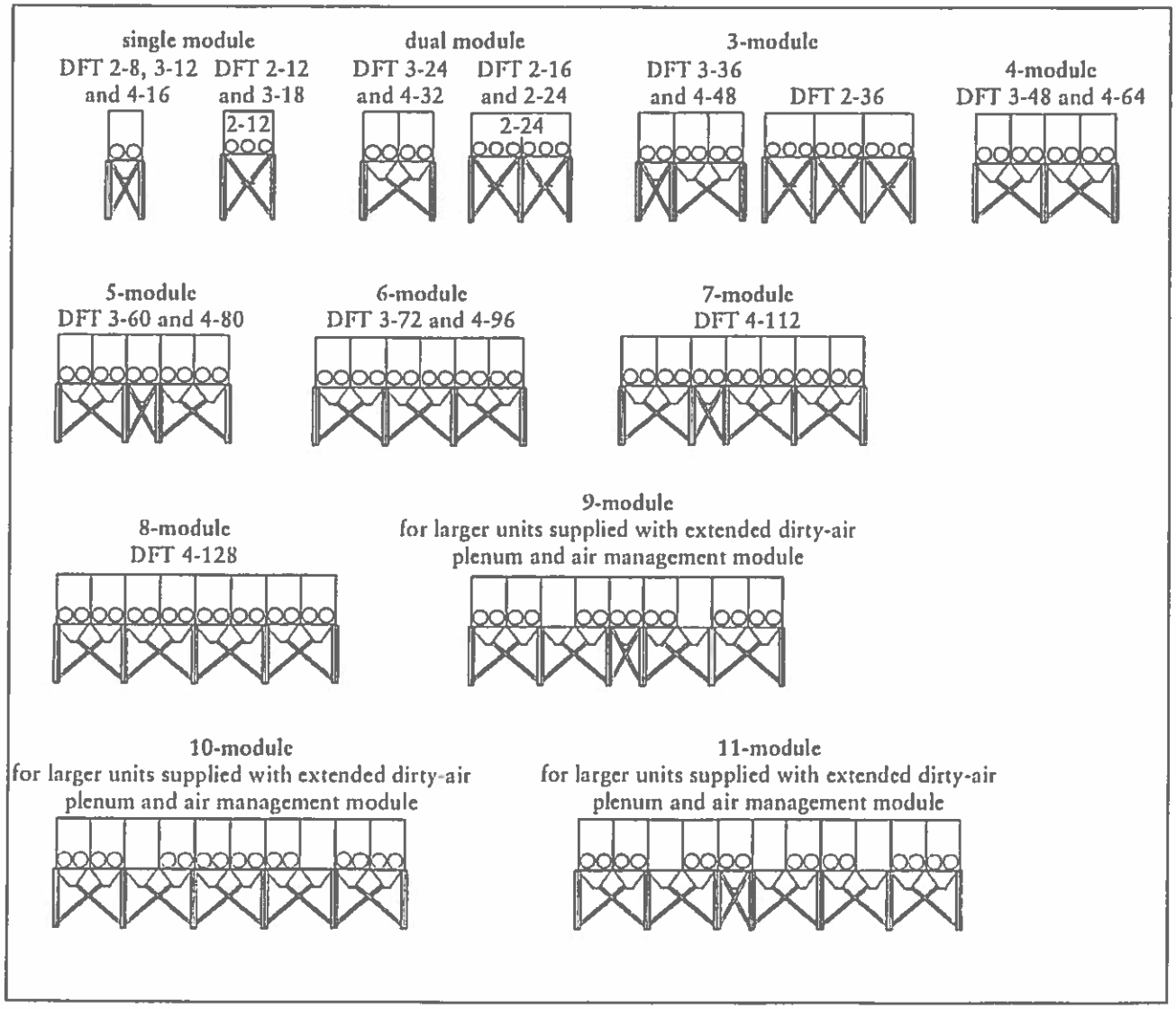

Leg Positioning

5. Recheck the position of the leg sets and cross braces.
6. Using a crane, lift the assembled unit onto the anchor bolts. Fasten each leg pad to the anchor bolts using flat washers, lock washers, and hex nuts provided by others. ***Do not tighten hardware at this time.***
7. Level unit. Tighten all hardware on legs, cross braces, and foundation anchors.
8. Remove crane.

Caution

Tighten all leg and cross brace hardware before removing crane.

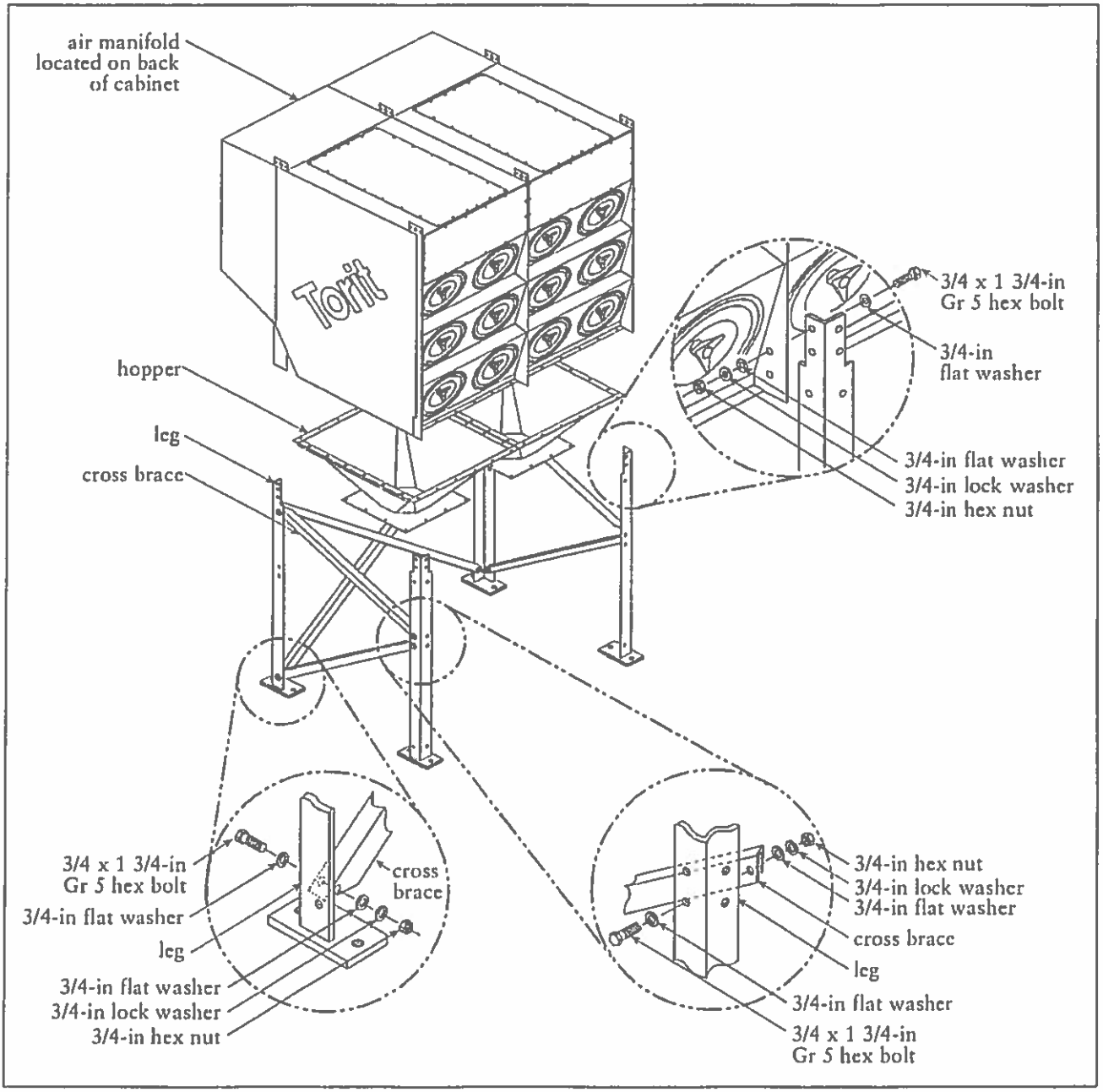

Leg and Cross Brace Assembly

Power Pack

The two types of power packs, Torit Backward Incline, TBI, and Torit Radial Blade, TRB, are installed following the same procedure. Both power packs are designed to fit on the top or side of the Downflo II.

Note: The use of a damper is required to control airflow through unit. Lack of a control damper will shorten filter life.

1. The power packs are shipped assembled and partial disassembly is required before installing.
2. Remove eight motor-mount bracket fasteners and remove the motor, motor-mount bracket, and fan wheel as an assembly as shown.
3. Turn housing over and apply sealant to the outside edge of the bolt pattern on the fan housing. Mount the fan housing to the collector using the fasteners supplied.

   Note: For a top-mounted TBI, or a TRB with a blast-gate style damper, install a spacer ring between the fan housing and the collector to provide the necessary clearance for the damper installation.
4. Apply sealant to the outside edge of the bolt pattern on the fan housing. Reinstall the motor, bracket, and fan wheel assembly. Align the tab on the fan housing with the slot in the motor-mount bracket.
5. Rotate fan wheel after installation to ensure proper clearance between the inlet cone and the fan wheel.

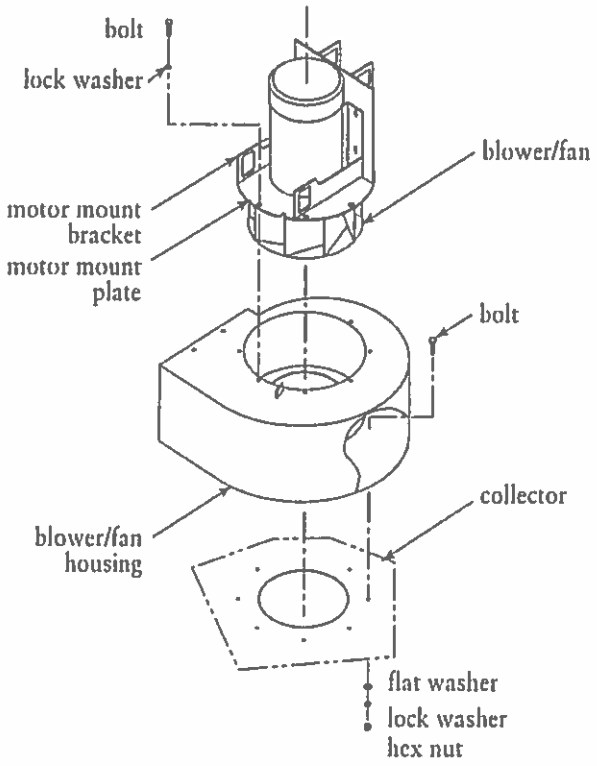

Power Pack Assembly and Installation

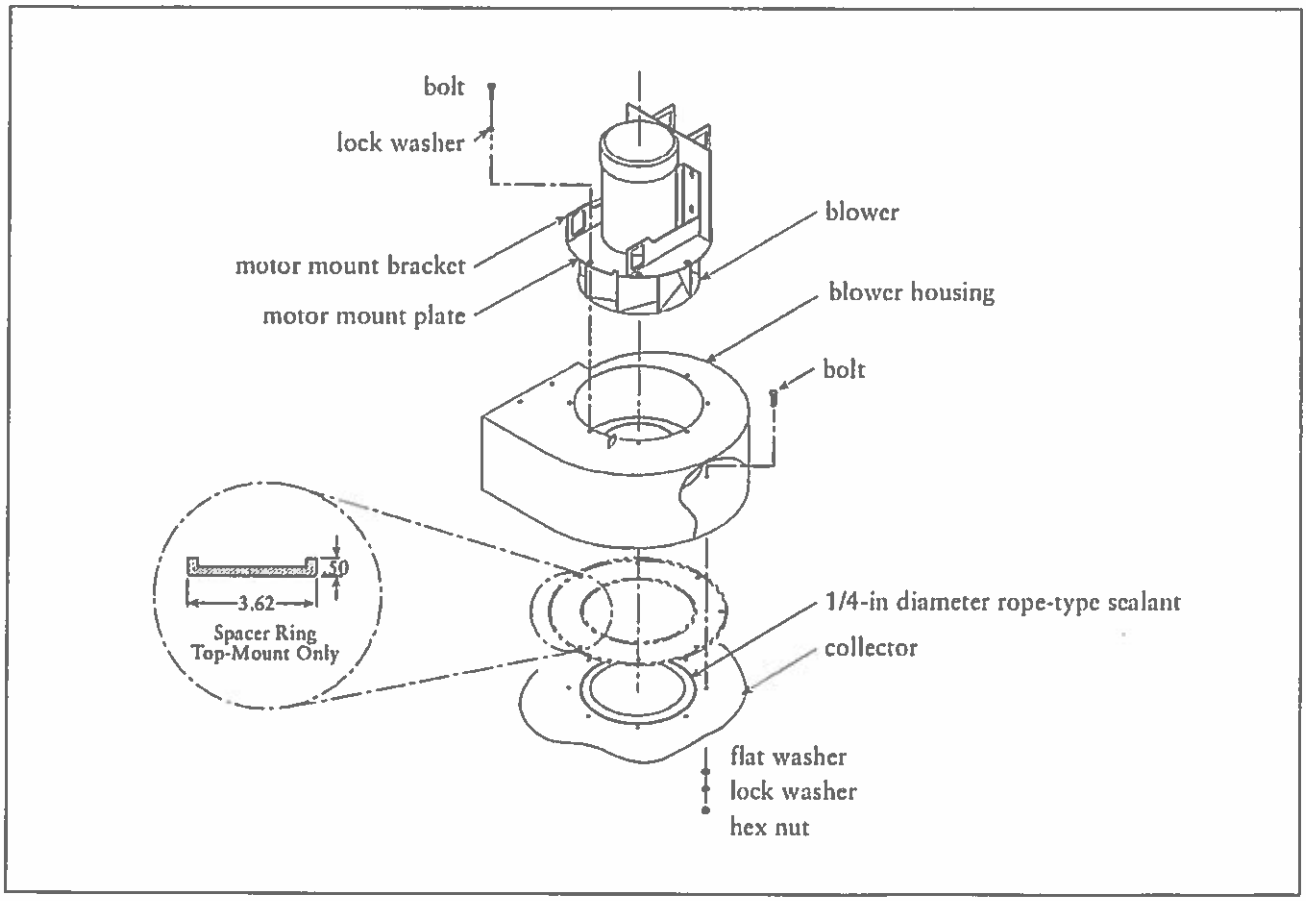

Power Pack with Spacer Ring Installation

Solid-State Timer Installation

The solid-state timer is an electronic timer used to control the filter cleaning system. Available options include 3, 6, 10, 20, and 32-pin solenoid valve control.

Note: The solid-state timer requires a 105 to 135-Volt customer-supplied power supply.

Do not mount the solid-state timer on the unit. Mechanical vibration can damage the control.

1. Using the wiring diagram supplied, wire the fan motor, fan-motor starter, solid-state timer, and solenoid valves. Use appropriate wire gauge for rated amp load as specified by local codes.
2. Plug the program lug into the pin that corresponds with the number of solenoid valves controlled.
3. With power supply ON, check the operation of the solenoid valves. The valves should open and close sequentially at factory set 10-second intervals.
4. If a Photohelic gauge or similar device is used to control the solid-state timer and the jumper on the pressure switch portion of the timer is removed, the solenoid valves pulse only when the differential pressure reaches the high-pressure setpoint. The valves continue to pulse until the low-pressure setpoint is reached.

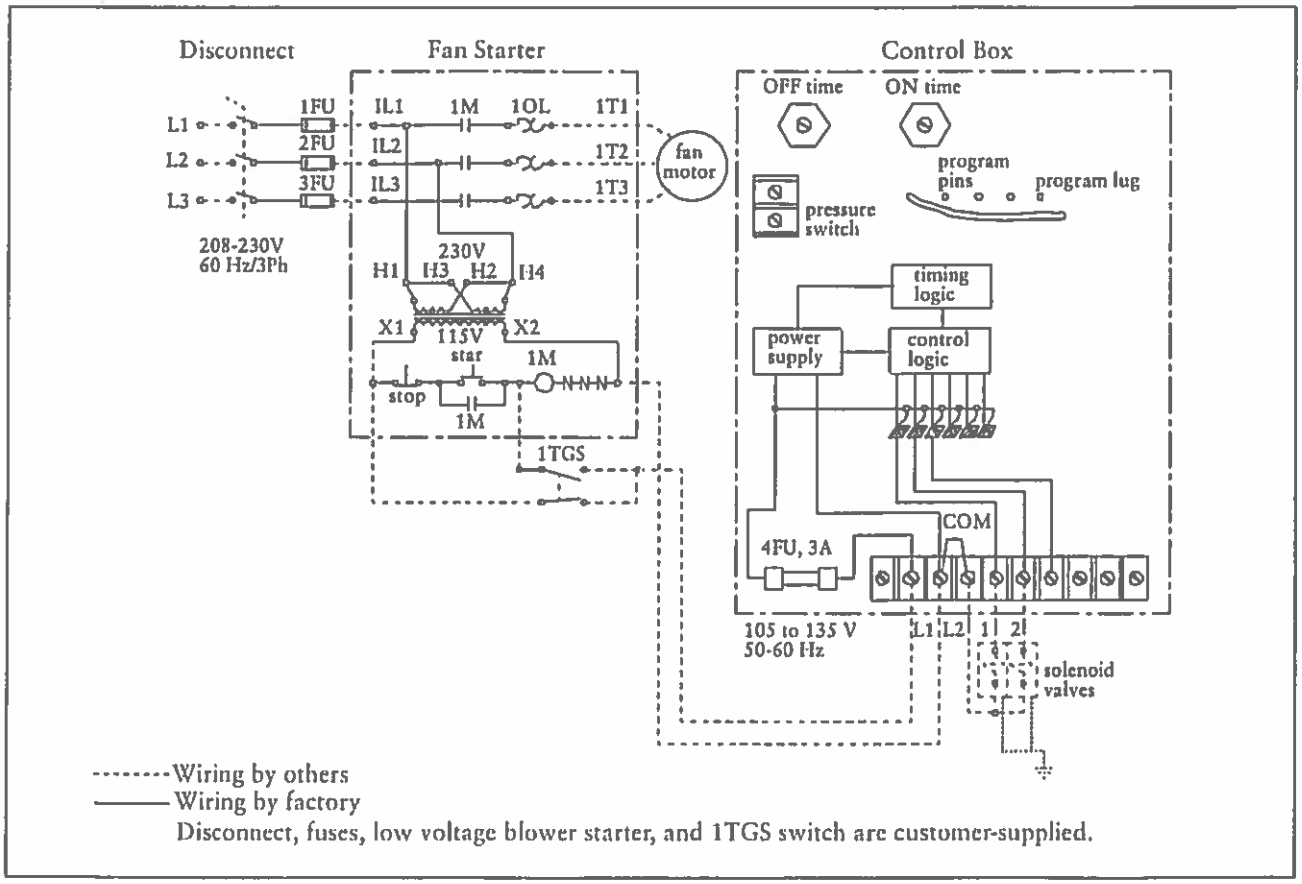

Solid-State Timer Wiring Diagram

Solenoid Connection

The unit is equipped with 115-Volt solenoid valves that control the pulse-cleaning valves, which clean the filters.

One of three types of solenoid enclosures, the weatherproof NEMA 4 with 3D2 solenoids, the explosion proof NEMA 7 with 5D2 solenoids, or the explosion proof NEMA 9 with 5D2 solenoids, is mounted near or on the unit's compressed-air manifold.

Wire the solenoids to the solid-state timer following the wiring diagram supplied with the unit. Filter life and cleaning operation will be affected if not wired correctly.

Timer and Solenoid Specifications

Power to the solid-state timer is supplied to Terminals L1 and L2, which operate in parallel with the fan starter's low-voltage coil. On fan start-up, power is supplied to the timer and the preset OFF time is initiated. At the end of the OFF time, the timer energizes the corresponding solenoid valve to provide the ON time cleaning pulse for one diaphragm valve and then steps to the next until all filters have been cleaned.

To pulse when the fan is OFF, install a toggle switch as shown on the Solid-State Timer Wiring Diagram. When the toggle switch is ON, the timer receives power and energizes the solenoid valves' pulse-cleaning operation even though the fan is turned OFF.

Input
105-135V/50-60Hz/1Ph

Output Solenoids
The load is carried and turned ON and OFF by the 200 watt maximum-load-per-output solid-state switch.

Pulse ON Time
Factory set at 100-milliseconds, or 1/10-second.

Note: *Do not* adjust pulse ON time unless the proper test equipment is available. Too much or too little ON time can cause shortened filter life.

Pulse OFF Time
Factory set at 10-seconds, adjustable from 1.5-sec minimum to maximum 30-seconds.

Operating Temperature Range
-20° F to 130° F

Transient Voltage Protection
50 kW transient volts for 20-millisecond duration once every 20 seconds, 1% duty cycle.

Solenoid Valves
115-Volt at 19.7 watts each

Compressed-Air
Set compressed-air supply at 90-psig. The timer is factory set to clean one filter or set of filters every 10-seconds.

Note: *Do not* set compressed-air pressure above 100-psig. Component damage will occur.

Delta P Control

When combined with a pulse timer, the Delta P control monitors the differential pressure between the clean- and dirty-air chambers, providing a visual display of the filter condition. Set the high-pressure ON and low-pressure OFF setpoints to control the filter cleaning system.

Note: The Delta P control is factory set for 115-Volts. To operate at 230-Volts, the jumper settings on the printed circuit board must be changed. See Optional Settings on Page 22.

Caution!

- Electrical installation must be performed by a qualified electrician and comply with all applicable national and local codes.
- Turn power OFF during installation or maintenance.
- Do not install in classified hazardous atmospheres without an enclosure rated for the application.

1. Choose a location near the unit that permits access to the keypad for adjustments and observation of the pressure drop. If possible, mount the control indoors.
2. Mount the control enclosure using four self-drilling, self-tapping screws.

   Note: Use vibration isolators in high vibration areas.
3. Install conduit between the control's enclosure, the solid-state timer, and the solenoid valve enclosure on the collector.
4. Using the wiring diagram provided with the control, make the wiring connections to the Delta P control, the solid-state timer, and the solenoid valves. Make the required connections to the motor starter's low-voltage terminals.

   Note: Use proper grounding and handling procedures to prevent permanent damage to this device. Handle the printed circuit board by the edges *only*. *Do not* touch the socketed E²PROM pins.
5. Wire the auxiliary alarm circuit, if desired. This relay activates the ALARM light on the control

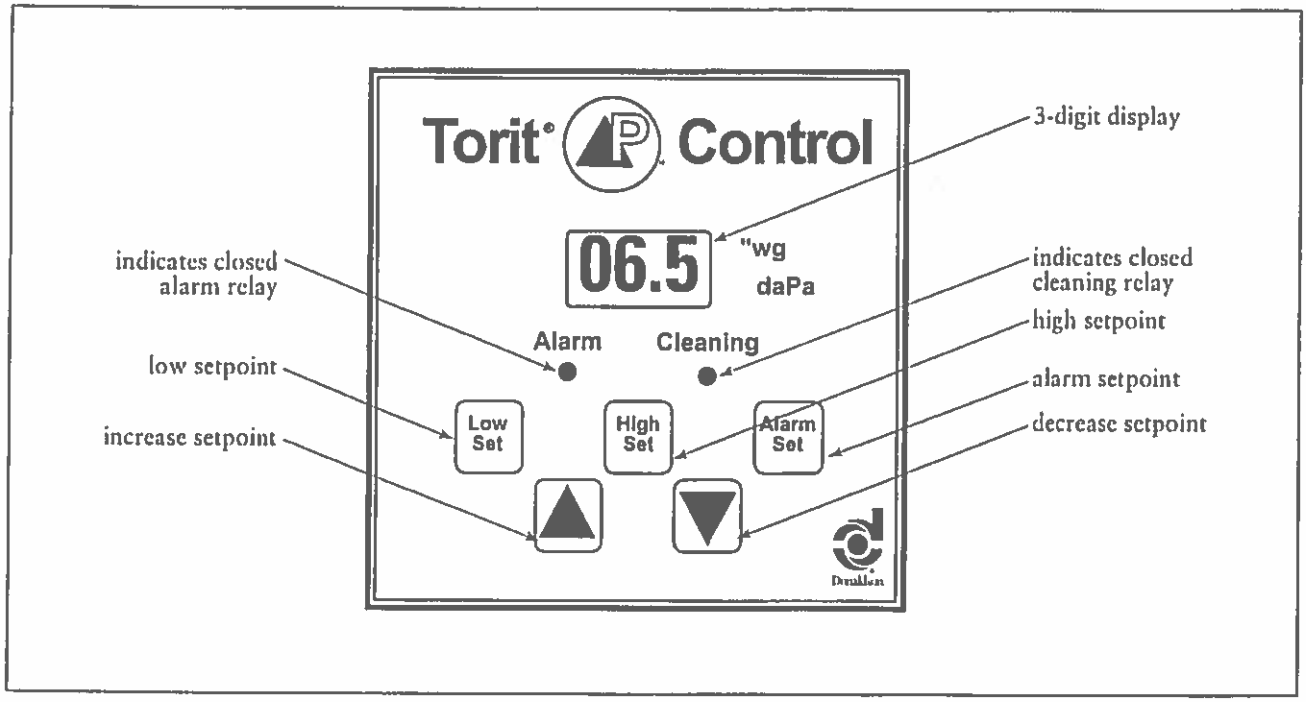

Delta P Control Display Panel

panel if the pressure drop reaches the alarm setpoint. The auxiliary relay can also be used to activate visual or audible alarms provided by others.

6. Thirty-five feet of plastic tubing is supplied with the control and must be cut in two sections. Connect one section of tubing from the control enclosure's high-pressure port to the pressure tap on the dirty-air chamber. Connect the remaining section of tubing from the control enclosure's low-pressure port to the pressure tap on the clean-air chamber. Additional tubing can be ordered from your representative.
7. Place the program wire on the solid-state timer board pin to match the number of solenoid-valve connections used.
8. Apply power to the control. Set the high- and low-pressure setpoints to start and stop the cleaning process. Set the alarm setpoint to activate the alarm display. See Delta P Control Calibration on Page 22.

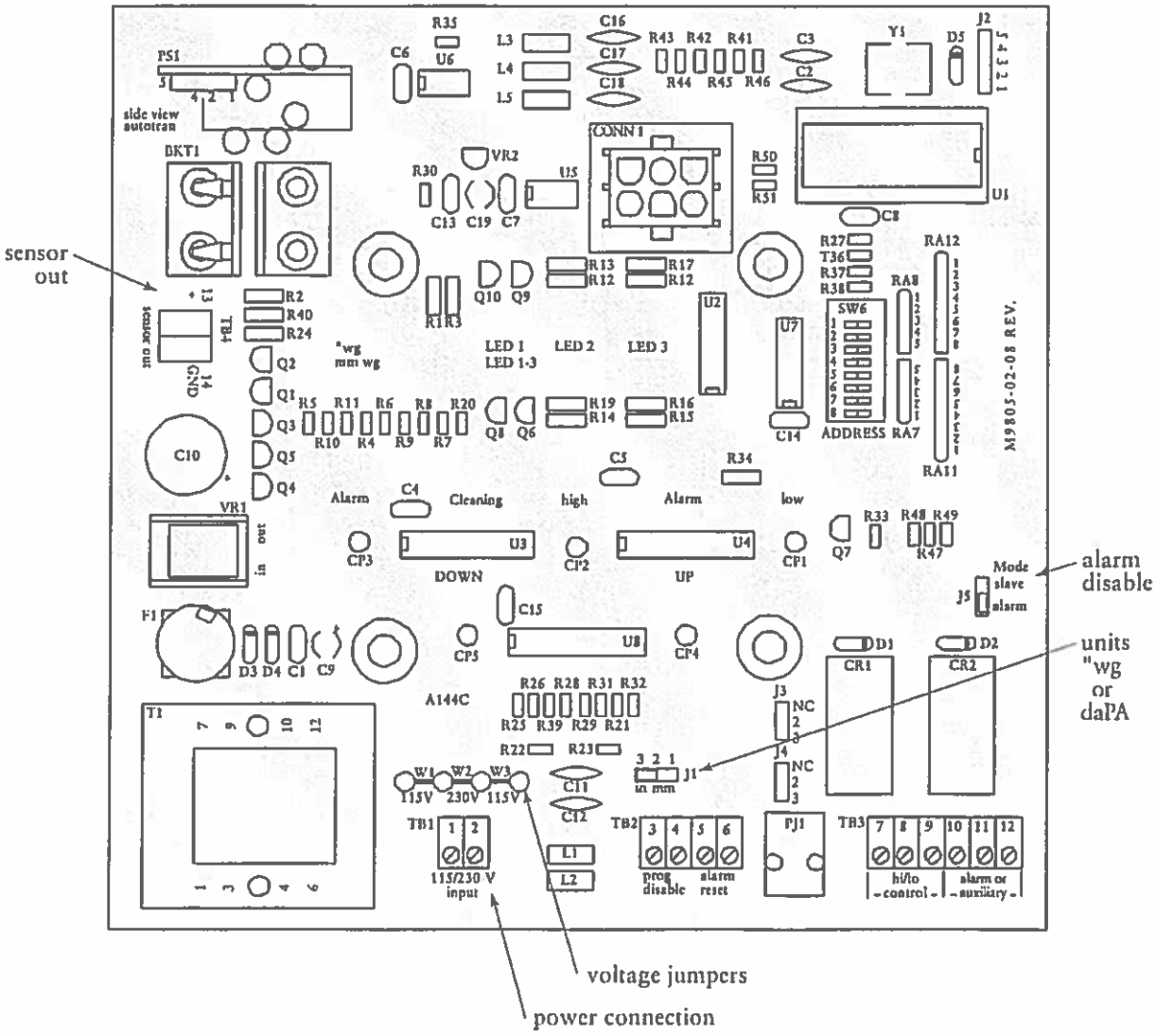

Delta P Control Printed Circuit Board

Optional Settings

230-Volt Power Supply
To operate at 230-Volt, remove two jumpers labeled W1 and W3. Reinsert one of the jumpers in position W2.

Change from English to Metric (SI) Units
On the J1 jumper block located above the PROG DISABLE terminals, move the jumper from the center and left pins 2 and 3, to the center and right pins 1 and 2.

Disable Setpoint Adjustment
To restrict setpoint changes, install a jumper wire across the PROG DISABLE terminals on Terminal Block 2, TB2. The current settings can be displayed, but no changes can be made until the jumper is removed. A key-operated, normally-closed switch installed in the enclosure door will provide temporary access to the setting functions without opening the door.

External Alarm Reset
Wire the ARM RESET terminals on Terminal Block 2, TB2, to a key-operated, normally-open switch. Closing the switch turns the alarm OFF. If alarm conditions still exist, the alarm relay re-activates in 10 seconds.

Alarm Disable
Remove the jumper on Jumper Block J5 located on the lower-right quadrant of the circuit board, from the ALARM mode position.

1. Reinstall the jumper in the SLAVE mode position to operate the AUXILIARY relay in parallel with the HI/LO CONTROL relay.
2. The AUXILIARY relay will not function if no jumper is installed.

   Note: Disabling the alarm relay reduces the alarm function to visual display only.

Analog Output
Locate the Sensor Out Terminal Block 4, TB4, in the upper-left quadrant of the circuit board. This connector provides a 1 to 5-Volt DC output proportional to the 0-to-maximum span of the pressure sensor. This circuit requires a 10,000-ohm load minimum.

Delta P Control Calibration

The only user calibration is the zero adjustment of the display. Due to slight changes in electronic components over time, or pressure differentials within the plant environment, the display may read something other than 0.0 while at rest. Use the following procedure to recalibrate the operating system.

1. Turn power to the Delta P Control ON for a minimum of 30-minutes to stabilize the operating temperature.
2. Turn power to the control OFF.
3. Press and hold the LOW SET, HIGH SET, and ALARM SET keys while turning power to the control back ON. Continue holding the keys as the control goes through its power-up sequence. The number 8 is displayed in each digit, and then the display reads 0.0.
4. Release the three keys. The new calibration is automatically stored in memory.

Compressed Air Installation

Caution!

- The compressed-air supply must be oil and moisture free. Contamination in the compressed air used to clean filters will result in poor cleaning, cleaning valve failure or poor collector performance.
- Purge compressed-air lines to remove debris before connecting to the unit's compressed-air manifold.
- Turn compressed-air supply OFF and bleed lines before performing service or maintenance work.

1. Remove the plastic pipe plug from the unit's air manifold and connect the compressed-air supply line. Use thread-sealing tape or pipe sealant on all compressed-air connections.

2. Install a customer-supplied shut-off valve, bleed-type regulator with gauge, filter, and automatic condensate valve in the compressed-air supply line.

Note: All compressed-air components must be sized to meet the maximum system requirements of 1.7 scfm at 90-psi supply pressure.

Do not increase supply pressure above 100-psi. Component damage can result.

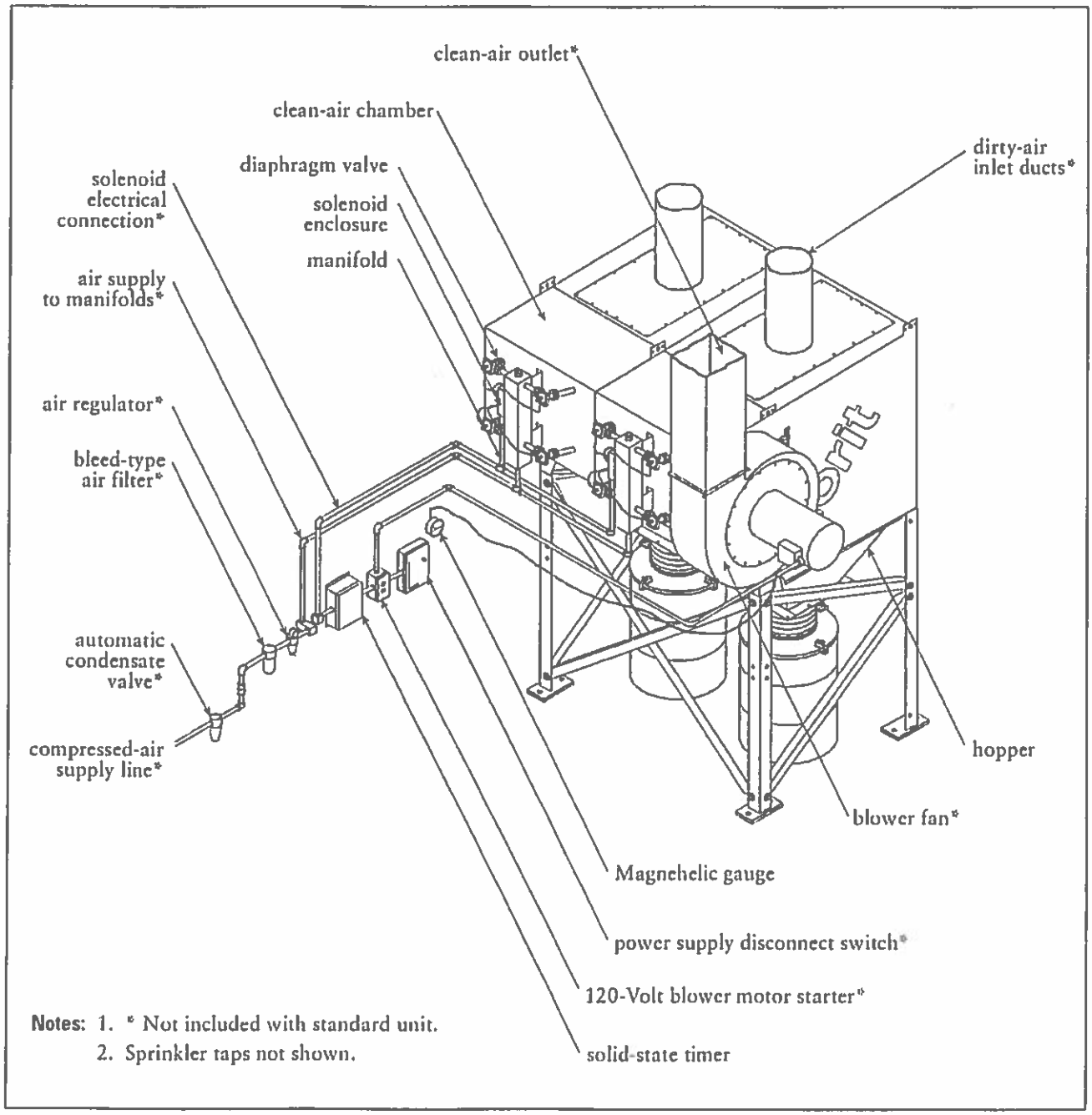

Compressed Air and Component Connections

Preliminary Start-Up

1. Check all electrical connections for tightness and contact.
2. Check for and remove all loose items in or near the inlet and outlet of the unit.
3. Check that all remote controls are wired into the control system and all service switches are in the OFF position.
4. Check that all optional accessories are installed properly and secured.
5. Check that hopper discharge is open and the storage container is sealed, if equipped. Excess airflow to the fan will cause electrical failure.
6. Turn power ON at source.
7. Turn the compressed-air supply ON. Adjust pressure regulator for 90 to 100-psig.
8. Turn the fan motor ON then OFF to check for proper rotation by referencing the rotation arrow located on the motor's mounting plate.

   To reverse rotation, single-phase power supply:

   Follow manufacturer's instructions on the motor's nameplate.

   To reverse rotation, three-phase power supply:

   Turn electrical power OFF at source and switch any two leads on the output-side of the fan-motor starter.
9. Adjust the fan for proper airflow by adjusting the volume control damper on the fan discharge and silencer, if equipped.

   Note: Excess airflow can shorten filter life, cause electrical system failure, and fan motor failure.

Caution!

Stand clear of the power pack exhaust area to avoid injury from exhausted debris.

Service Information

Operational Checklist

1. Monitor overall performance of the collector.
2. Monitor exhaust.
3. Monitor pressure drop across filters.
4. Monitor dust disposal.

Filter Installation and Replacement

Caution!

- Use proper safety and protective equipment when removing contaminants and filters.
- Dirty filters may be heavier than they appear.
- Use care when removing filters to avoid personal injury.
- Do not drop filters.

1. Turn power to unit OFF.
2. Start at the top access port.
3. Remove access cover by turning knob counterclockwise.
4. Break the seal between the filter cartridge and the sealing surface.
5. Slowly rotate the cartridge 1/2-turn to remove dust that may have accumulated on the top of the filter.
6. Slide the filter out the access port along the suspension yoke.
7. Dispose of properly.
8. Clean the sealing surface with damp cloth.

   Note: Clean dust from gasket sealing area to ensure a positive filter gasket seal.
9. Check for an accumulation of dust in the storage area and empty as necessary.

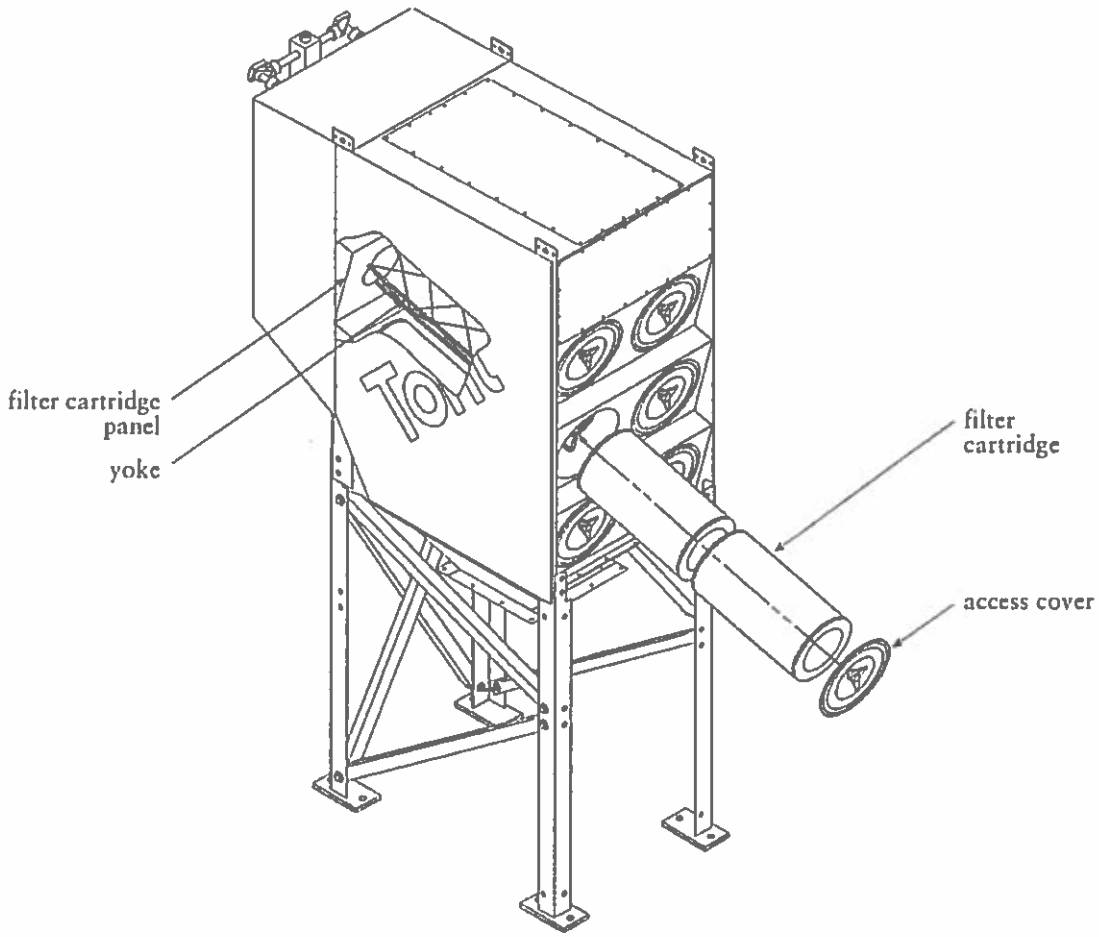

Downflo II, Model DFT 2-12

Filter Cartridge Replacement

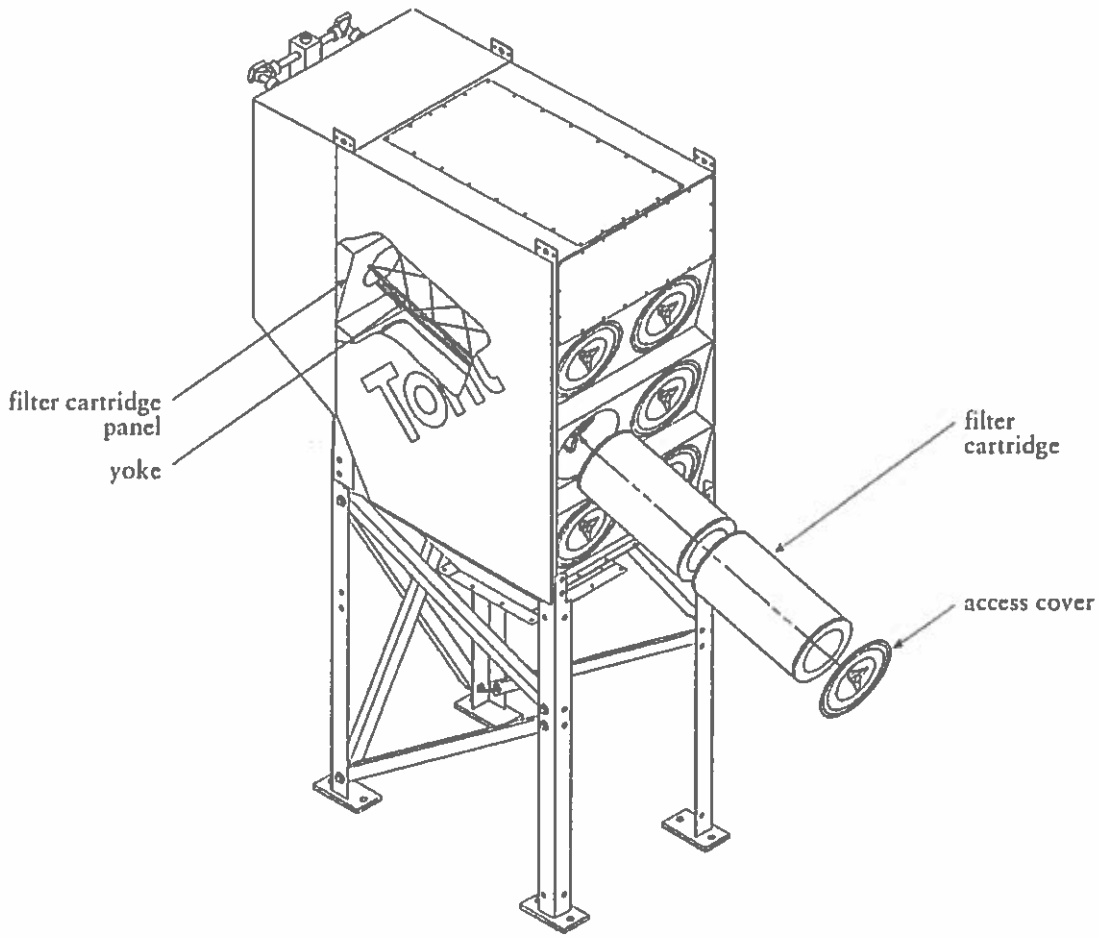

Downflo II, Model DFT 2-12

Filter Cartridge Replacement

Filter Replacement

1. Slide the new filter cartridge onto each suspension yoke.

   Note: Insert the filter with the gasket end facing the clean-air chamber.

2. Wipe cover gaskets clean and replace covers by turning the knob clockwise. Tighten securely by hand.

   Note: Tighten access covers securely by hand. Gaskets must be compressed to seal properly.

3. Turn electrical power and compressed air supply ON before starting unit.

Dust Disposal

1. Turn unit OFF and empty dust container as necessary to minimize dust in the hopper.
2. If the optional 55-gallon drum attachment is used, empty when drum is 2/3 full.
3. If optional slide gate is used, close gate before servicing drum.
4. Reinstall drum and open gate.

Compressed Air Components

1. Periodically check the compressed air components and replace compressed-air filters.
2. Drain moisture following the manufacturer's instructions.
3. With the compressed-air supply ON, check the cleaning valves, solenoid valves, and tubing for leaks. Replace as necessary.

Caution!

Turn compressed-air supply OFF and bleed lines before performing service work.

Optional Equipment

55-Gallon Drum Pack

The drum pack is designed to fit a customer-supplied, standard 55-gallon drum and provides easy access for dust removal and disposal. A flexible hose connects the drum cover and slide gate, or drum cover and adapter. Placing a pallet under the drum allows heavier product to be moved quickly using a forklift or pallet jack. If a pallet is used, the length of flexible hose may need to be shortened.

With Slide Gate

1. Place the 1/8-in gasket spacer between the hopper flange and slide gate as shown.
2. Attach the drum pack and slide gate to the hopper flange using 3/8-16 bolts, washers, and hex nuts.
3. Attach the drum cover to the 55-gallon drum.
4. Use latches to secure the cover to the drum, if equipped.
5. Connect the flexible hose between the drum cover and slide gate. Secure with hose clamps.

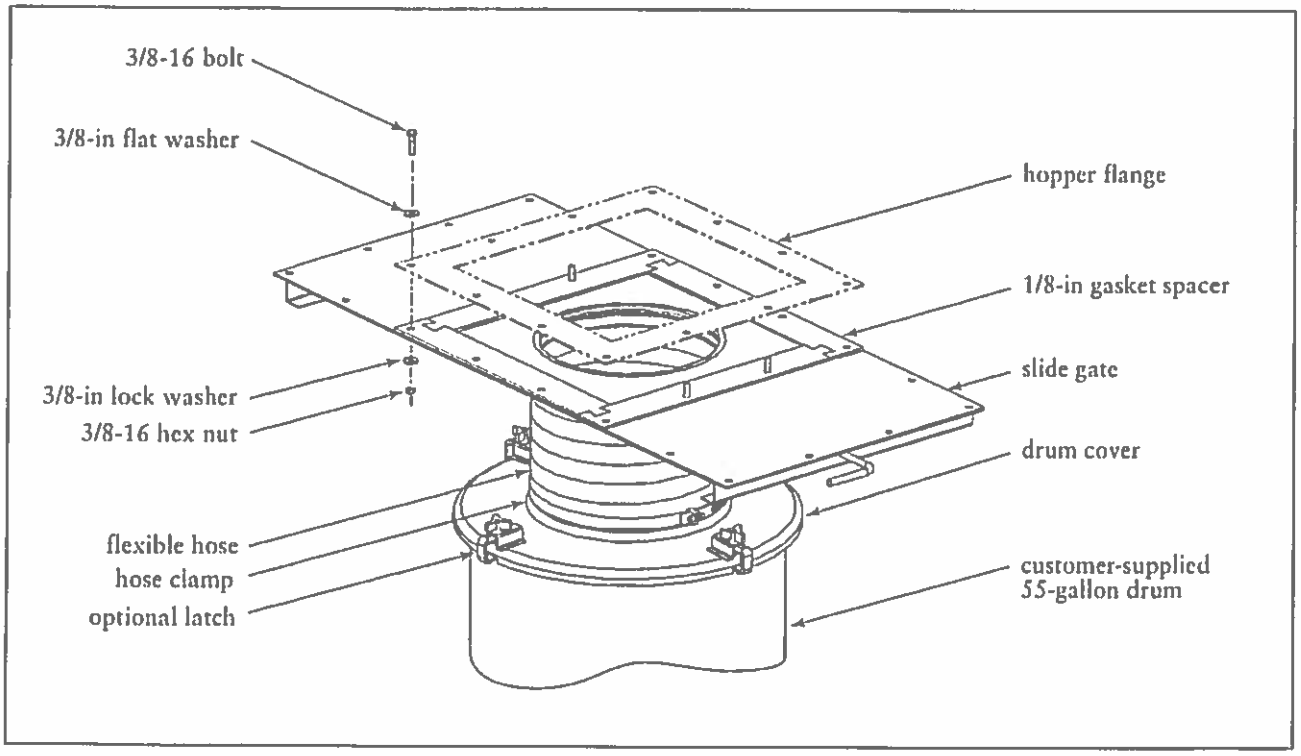

55-Gallon Drum Pack with Slide Gate

Without Slide Gate

1. Place the 1/4-in diameter rope-type sealant between the hopper flange and the adapter as shown.
2. Attach the adapter to the hopper flange using 3/8-16 bolts, washers, and hex nuts.
3. Attach the drum cover to the 55-gallon drum.
4. Use latches to secure the cover to the drum, if equipped.
5. Connect the flexible hose between the drum cover and the adapter. Secure with hose clamps.

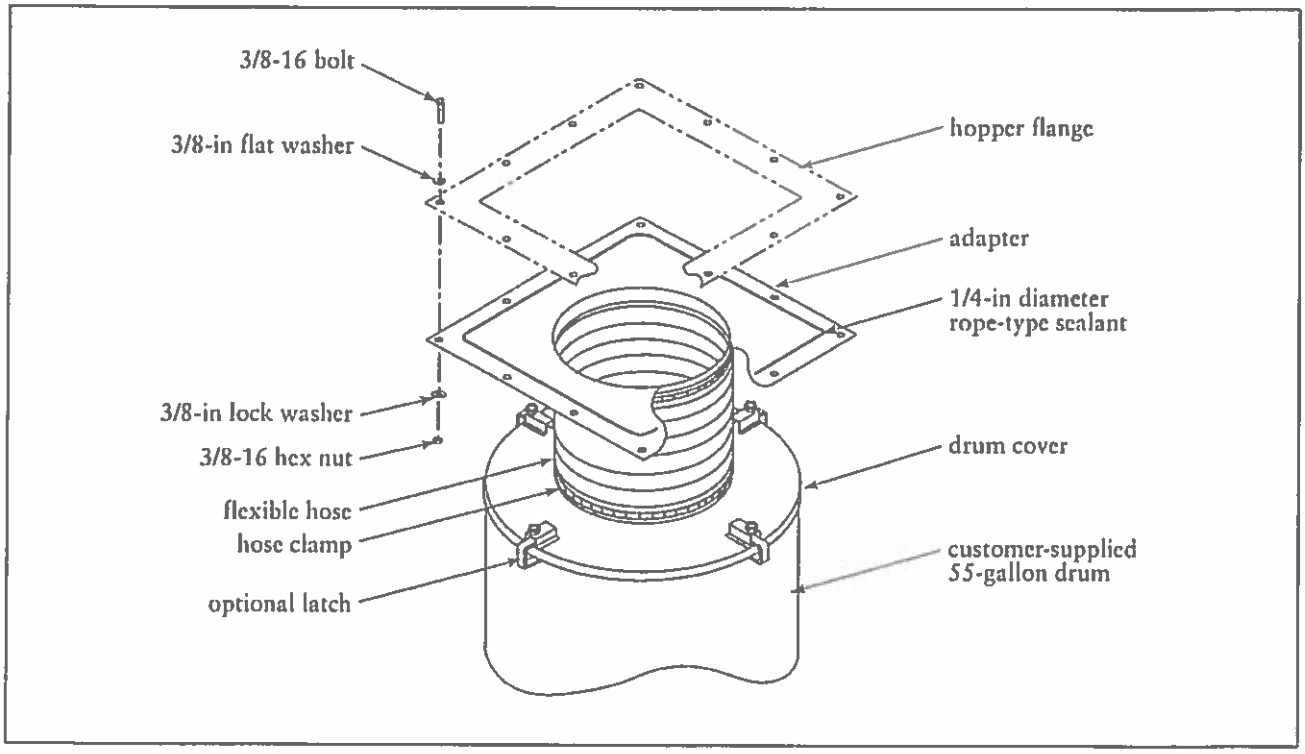

55-Gallon Drum Pack without Slide Gate

Magnehelic Gauge

The Magnehelic is a differential pressure gauge used to measure the pressure difference between the clean- and dirty-air chambers and provides a visual display of filter change requirements. The high-pressure tap is located in the dirty-air chamber and the low-pressure tap is located in the clean-air chamber.

1. Choose a convenient, accessible location on or near the unit for mounting that provides the best visual advantage.

If unit is equipped with factory-installed pressure taps, skip to Step 5.

2. Before drilling, place a piece of non-combustible cloth over the filter opening in the clean-air chamber to protect them from drilling chips.
3. Place a piece of wood behind the drill location in the dirty-air chamber to protect the filters from damage by the drill bit. Use a .406-inch diameter bit to drill the holes as shown in Magnehelic Gauge, Detail A.
4. Mount the pressure tap hardware on the clean-air chamber panel. Mount the pressure tap with the tee inside the dirty-air chamber.
5. Plug the pressure ports on the back of the gauge using two, 1/8-in NPT pipe plugs supplied. Install two, 1/8-in NPT male adapters supplied with the gauge into the high- and low-pressure ports on the side of the gauge. Attach the mounting bracket using three, #6-32 x 1/4-in screws supplied.

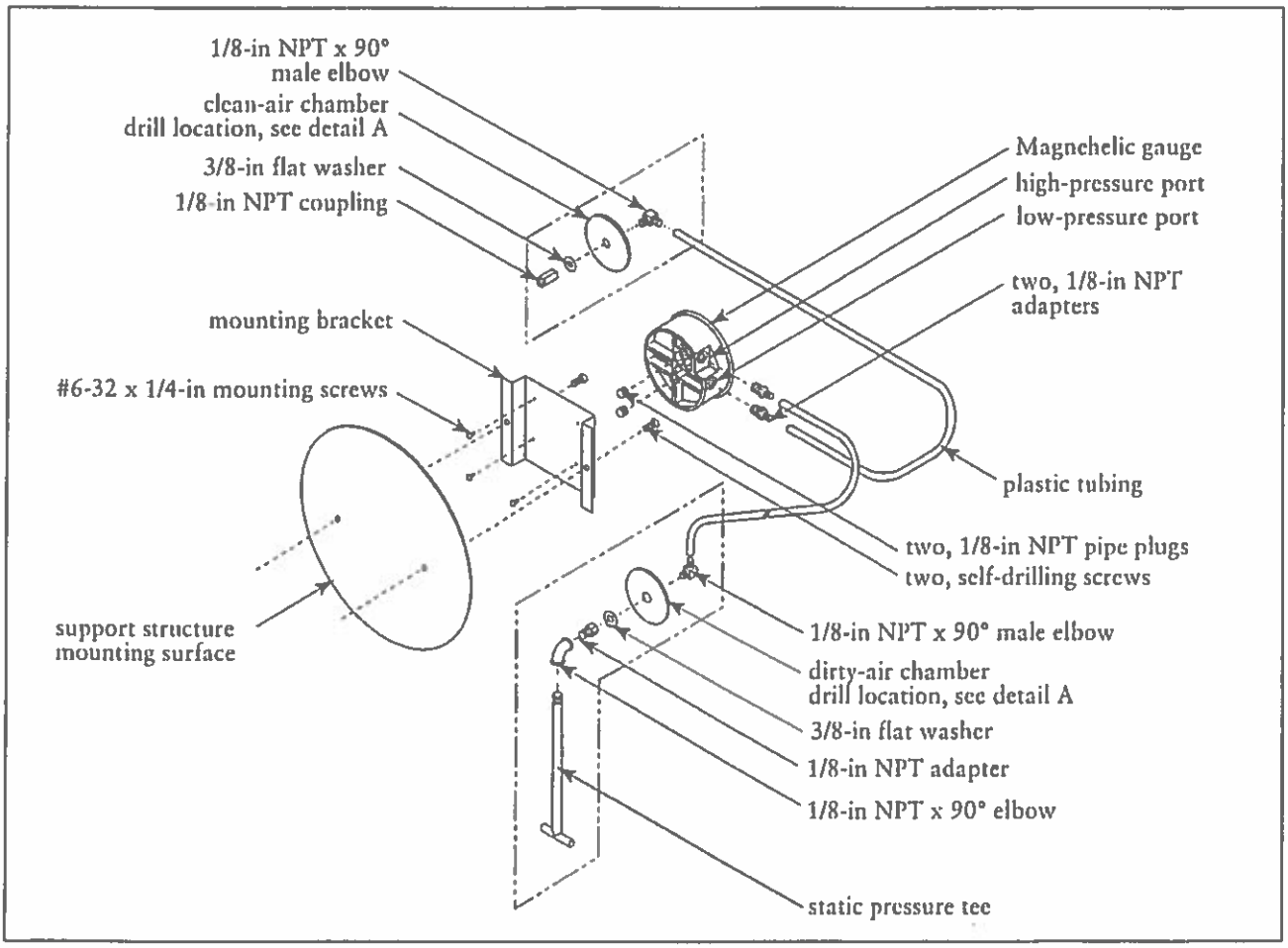

Magnehelic Gauge Installation

6. Mount the gauge and bracket assembly to the supporting structure using two, self-drilling screws.
7. Thirty-five feet of plastic tubing is supplied and must be cut in two sections. Connect one section of tubing from the gauge's high-pressure port to the pressure fitting located in the dirty-air chamber. Connect remaining tubing from the gauge's low-pressure port to the fitting in the clean-air chamber. Additional tubing can be ordered from your representative.
8. Carefully remove the cloth protecting the filters. Close access doors and tighten securely by hand.
9. Zero and maintain the gauge as directed in the manufacturer's Operating and Maintenance Instructions provided.

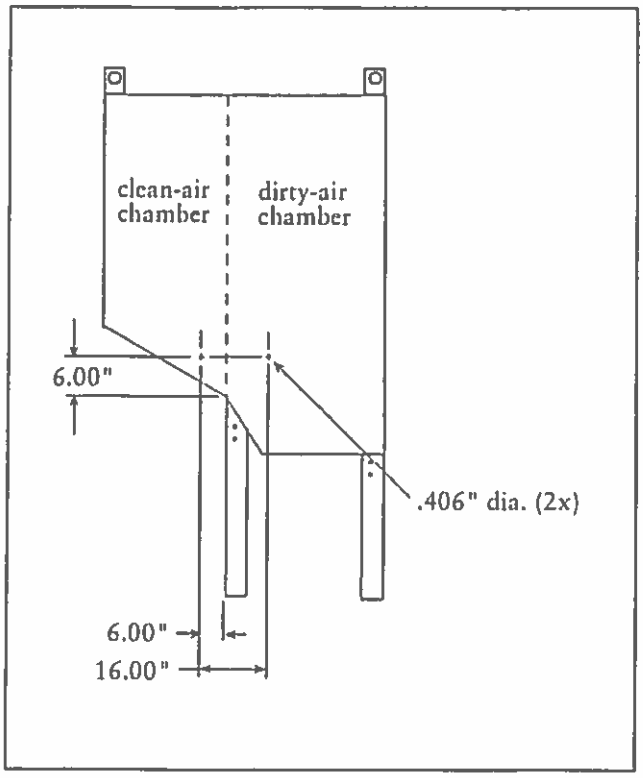

Magnehelic Gauge, Detail A

Photohelic Gauge

The Photohelic combines the functions of a differential pressure gauge and a pressure-based switch. The gauge function measures the pressure difference between the clean- and dirty-air chambers and provides a visual display of filter condition. The high-pressure tap is located in the dirty-air chamber and a low-pressure tap is located in the clean-air chamber. The pressure-based switch function provides high-pressure ON and low-pressure OFF control of the filter cleaning system.

Caution!

- Electrical installation must be performed by a qualified electrician and comply with all applicable national and local codes.
- Turn power OFF during installation or maintenance.
- Do not install in classified hazardous atmospheres without an enclosure rated for the application.

1. Choose a convenient, accessible location near the unit that provides the best visual advantage.
2. Mount the gauge to the remote panel or door using the mounting ring, retaining ring, and four #6-32 x 1 1/4-in screws. Do not tighten screws. Connect two, 1/8-in NPT x 1/4-in OD male adapters to the gauge's high- and low-pressure ports. Align the adapters to the 2.375-in hole in the right-hand side of the mounting bracket. Tighten screws.
3. On the back of the gauge, remove four #6-32 x 5/16-in screws and plastic enclosure. Set aside. Add two jumper wires supplied by customer. Remove the jumper from the pressure switch located on the timer board, if equipped. Using the 3/4-in conduit opening, wire the gauge as shown. Reassemble and fasten the enclosure securely.

4. Thirty-five feet of plastic tubing is supplied and must be cut in two sections. Connect one section of tubing from the gauge's high-pressure port to the pressure fitting located in the dirty-air chamber. Connect remaining tubing from the gauge's low-pressure port to the fitting in the clean-air chamber. Additional tubing can be ordered from your representative.
5. Zero and maintain the gauge as directed in the manufacturer's Operating and Maintenance Instructions provided.
6. To install the Photohelic Gauge mounted in a NEMA 4, Weatherproof Enclosure, follow Steps 4 and 5.

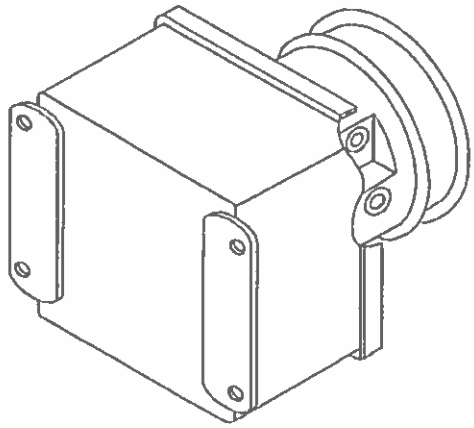

Note:
For use with solid-state timer only.
All parts, except the mounting bracket shown in the Photohelic Gauge Standard Installation drawing are included with the NEMA 4, Weatherproof Enclosure.

Photohelic Gauge in Optional NEMA 4 Weatherproof Enclosure

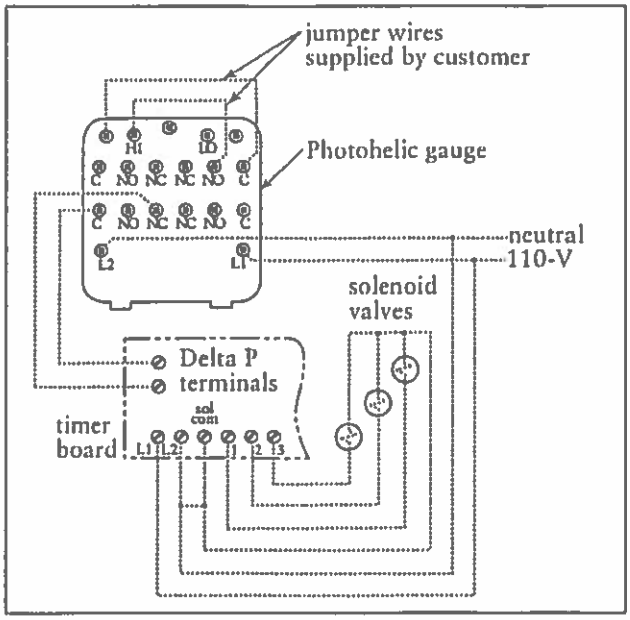

Photohelic Gauge Wiring Diagram

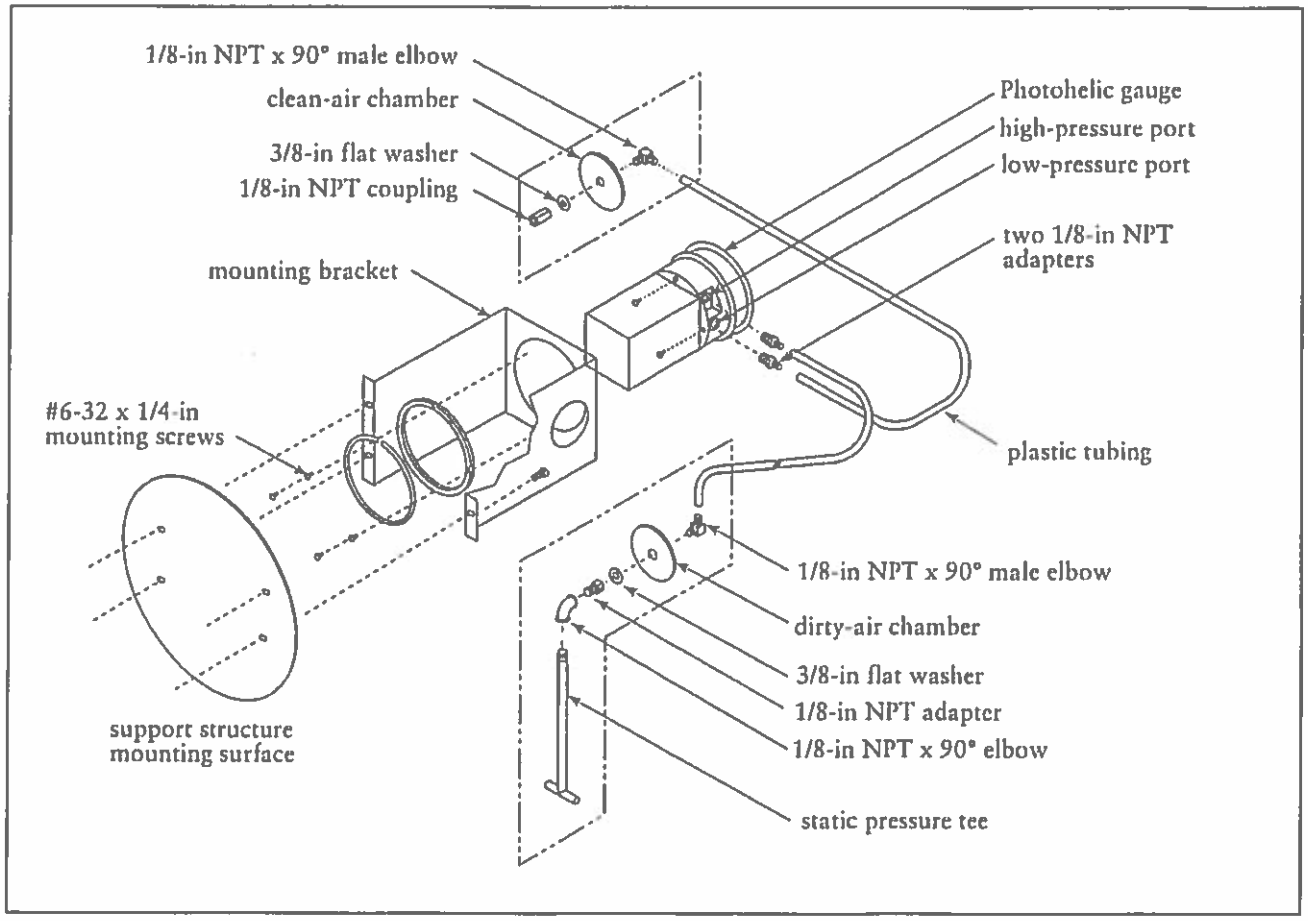

Photohelic Gauge Installation

Transition and Rotary Valve

The 7-inch tall transition is designed to connect a standard hopper and a rotary valve. Rotary valves are used as an airlock and a metering device in dust control applications. When used as an airlock, an airtight seal between the valve's inlet and outlet is maintained while allowing dust or material to pass through. Comparatively, the airlock works along the same line as a revolving door on a building; an airtight seal is maintained while people are allowed to pass through.

When used as a metering device, the valve allows a specific amount of material to pass per revolution, depending on the size and speed of the valve. Sizing is determined at time of order and based on product load. Standard sizes include 8, 10, 12, and 16-in inlets.

Caution!

Transitions are not intended or capable of supporting the weight of the airlock. Provide adequate support to prevent damage to airlock or collector.

1. Place 1/4-in diameter rope-type sealant to the inside of the transition's bolt pattern.
2. Use 3/8-16 bolts, washers, and hex nuts to fasten transition to hopper.
3. Determine the proper position required for the rotary airlock. Allow clearance for electrical connections and future maintenance.
4. Place a 1/4-in diameter rope-type sealant toward the inside edge of the airlock's top flange.
5. Fasten the airlock to the transition flange using 3/8-16 bolts, washers, and hex nuts.
6. Electrical connections must be made by a qualified electrician. Refer to the motor's nameplate for voltage, amp rating, cycle, and wiring sequence.

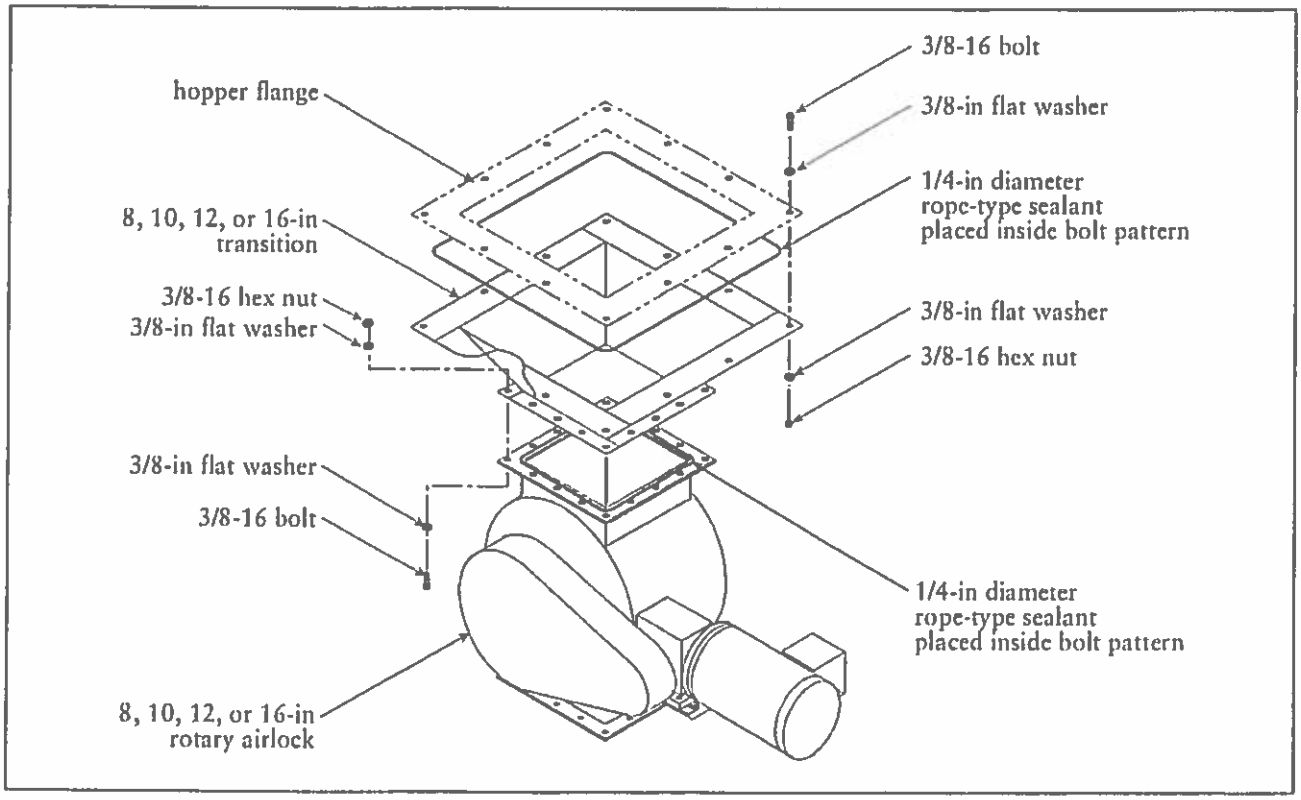

Transition and Rotary Valve Assembly

Damper and Silencer, TBI

Side and Top Mount

1. Install the power pack as described in Power Pack on Page 16.
2. Attach the damper to the fan exhaust outlet using the bolts, washers, and hex nuts supplied.
3. Attach the flange to the damper using the bolts, washers, and hex nuts supplied.
4. Apply sealant to the flange and attach silencer to flange. Tighten all hardware.
5. Loosely assemble the silencer's support brackets.

   Support Brackets, Top Mount

   a. Align the pivoting support brackets to extend a minimum of 30-inches from the collector and mark the drill locations.

   b. Drill pilot holes with a 0.339-inch bit.

   c. Secure brackets using 3/8-in thread-forming bolts.

   Support Brackets, Side Mount

   a. Align the support bracket to the underside of the silencer, flush with the cabinet wall, and mark the drill locations.

   b. Drill pilot holes with a 0.339-inch bit.

   c. Secure brackets using 3/8-in thread-forming bolts.
6. Loosen the wing nut on the damper and adjust to approximately 50% closed.

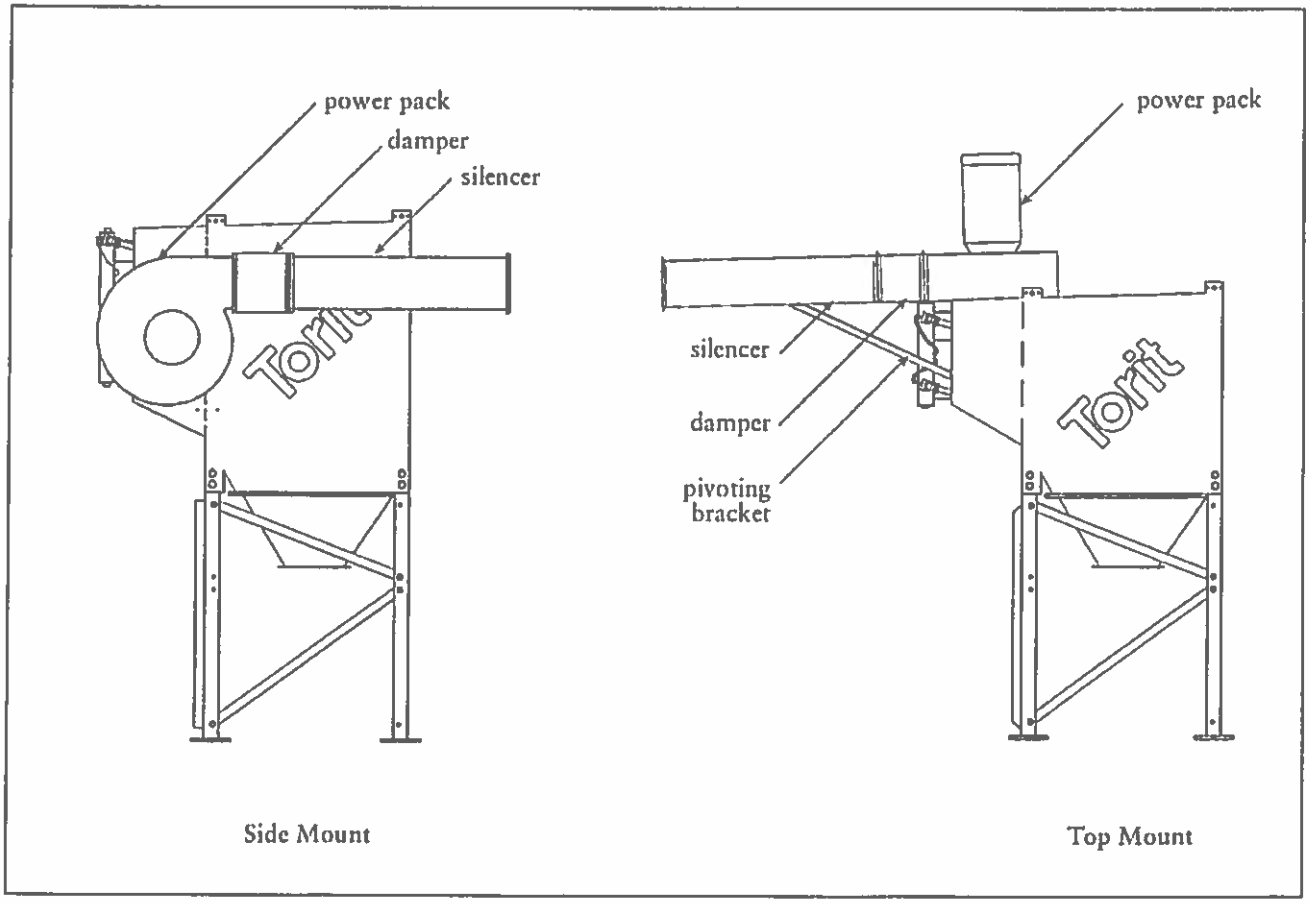

Side and Top-Mount Silencer and Damper Installation

Chamber Silencer, TRB

Top Mount

1. Apply sealant and attach the bottom panel to the collector as described on the assembly drawing shipped with the silencer. Use a combination of hardware removed from the unit and hardware supplied.
2. Install the fan and motor assembly as described in the Power Pack on Page 16 and the assembly drawing.
3. Route rigid or flexible conduit from the junction box on the motor to the outside wall of the silencer to house wiring.
4. Install the top of the silencer and attach the silencer to the base using the supplied hardware.
5. Loosen the wing nut on the damper and adjust to approximately 50% closed.

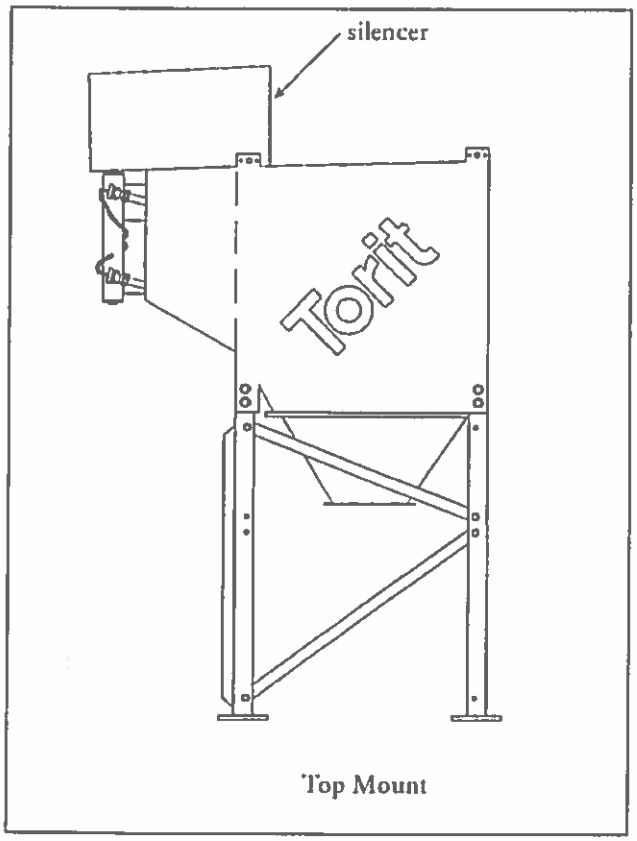

Top-Mount Chamber Silencer and Damper Installation

Inlet Collar

1. Apply sealant to the inlet collar's mounting surface.
2. Align holes on the inlet collar plate and the collector's inlet mounting surface and secure using twenty-four 5/16-18 x 1-in bolts and flat washers as shown.

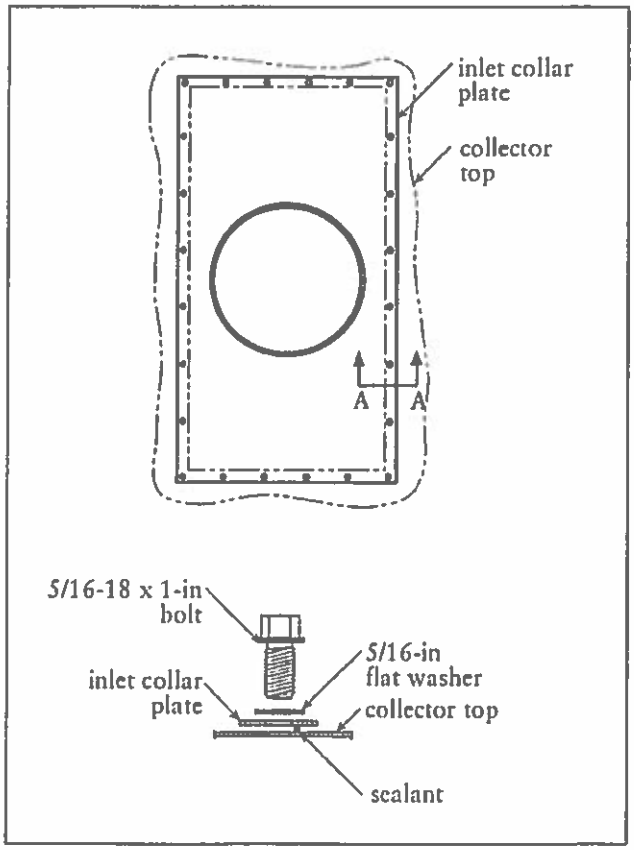

Inlet Collar Installation

Abrasion-Resistant Inlet Collar

1. Remove the unit's front cover plate. Remove excess sealant from opening.
2. Apply 1/4-in diameter rope-type sealant around the opening toward the inside edge of the bolt pattern.
3. Align the holes on the inlet collar with the holes in the unit and secure using 3/8-16 x 1-in bolts and flat washers supplied.

   Note: Elbows attached directly to the abrasion-resistant inlet should be long sweep elbows. Place the centerline of the elbow perpendicular to the front of the collector.

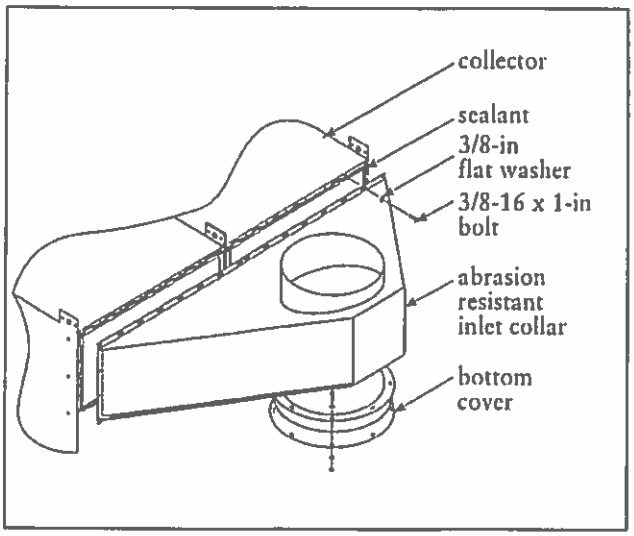

Abrasion-Resistant Inlet Collar

Extended Dirty-Air Plenum

The extended dirty-air plenum is used in applications requiring an air management module, an end inlet, or when a single inlet serves multiple modules.

When positioned as an end module, it is supplied with a standard 24 x 47-in covered opening that may be used as an access, inlet, or explosion vent area.

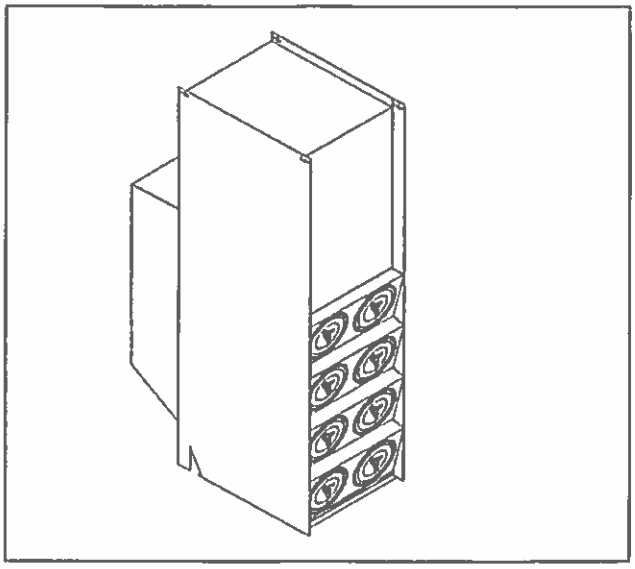

Extended Dirty-Air Plenum

Air Management Module

The air management module is used in applications involving heavy grain loading, large or abrasive particles in the airstream, or in applications when a collector with a single inlet serves multiple modules. It is equipped with a louvered panel near the bottom, which prevents re-entrainment of the dust that falls through to the hopper. This module does not contain filters and is available for use with an extended dirty-air plenum only.

When the air management module is positioned as an end module, it is supplied with a standard 24 x 47-in covered access opening.

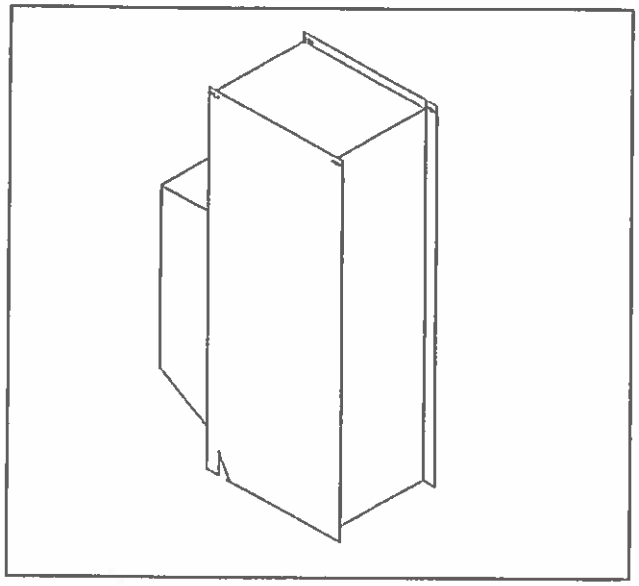

Air Management Module

Platforms and Ladders

There are two platform styles available for the Downflo II. A stationary platform is available on all single-module units, four filter wide double-module units, and two filter wide modules with an air management module. The mobile platform with brake is used on all other units. Complete installation and assembly instructions are shipped with the platform.

Caution!

- Secure the platform assembly to the crane or forklift with straps or clamps.
- Apply the brake when standing on the ladder or platform.
- *Do not* relocate the platform with people on it.

Stationary Platform

1. Pre-assemble the platform according to the instructions shipped with the platform. The hardware and placement is called out on the assembly drawing.
2. Lift the assembled platform into position and secure following the assembly drawing instructions.
3. Tighten all hardware before removing crane or forklift.
4. Check platform hardware each time the platform is used.

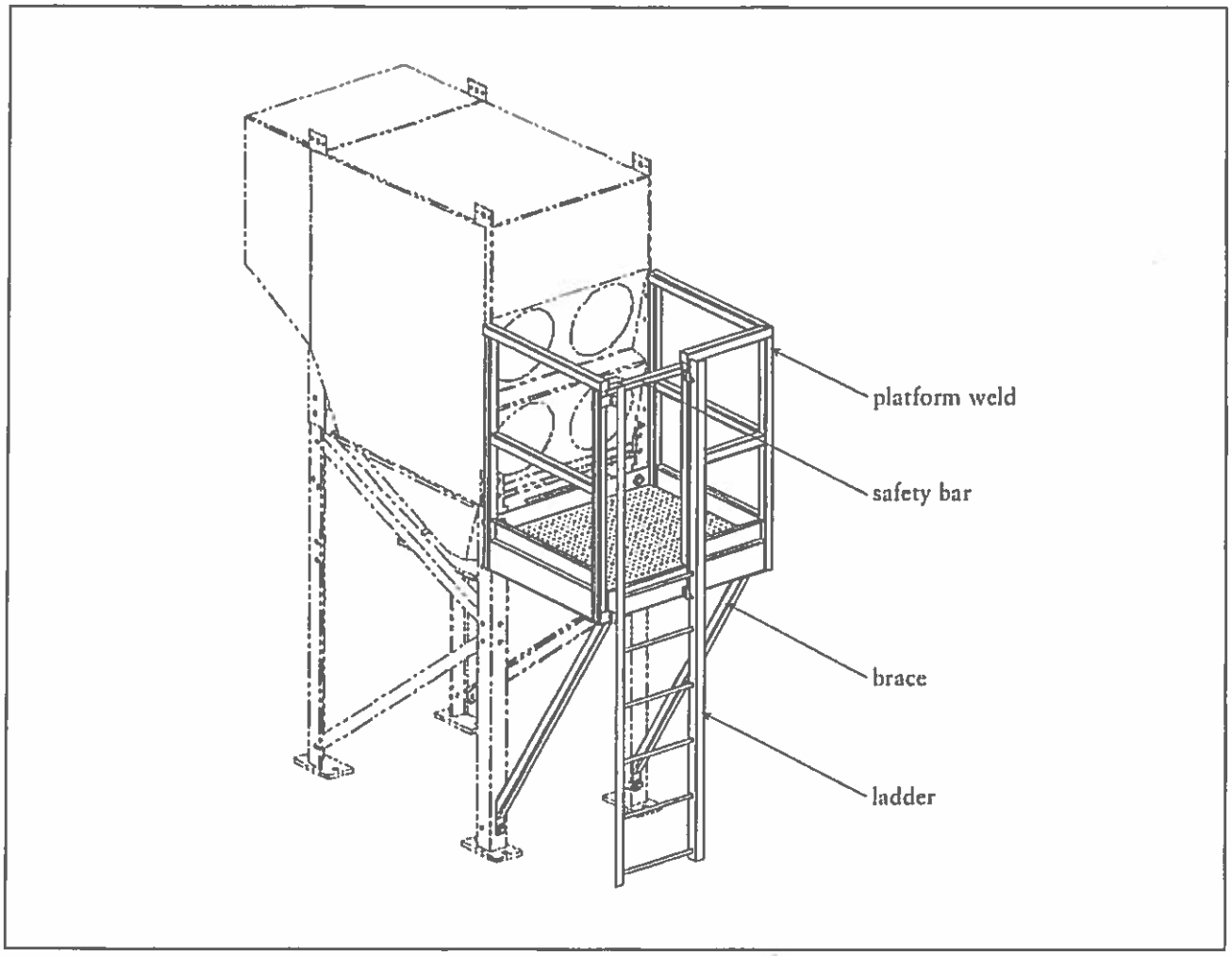

Stationary Platform

Mobile Platform

1. Attach the top and bottom rails, gussets, and retainers to the unit as shown on the installation drawing. Use hardware as directed.
2. Secure the platform assembly to the crane or forklift with straps or clamps and lift into position.
3. Hook the top of the platform with the roller over the top rail and lower until the top wheels rest in the top rail and the bottom wheels rest in the bottom rail.
4. Check that all hardware is secure and that all stops on mobile platforms are in place before removing crane or forklift.
5. Attach ladder and safety bar to platform.
6. Release the brake and move the platform slowly from one end of the unit to the other. The platform should move smoothly without interference. Apply the brake and check for movement.
7. Remove the straps or clamps.
8. Routinely check the hardware, stops, brakes, and movement of the platform.

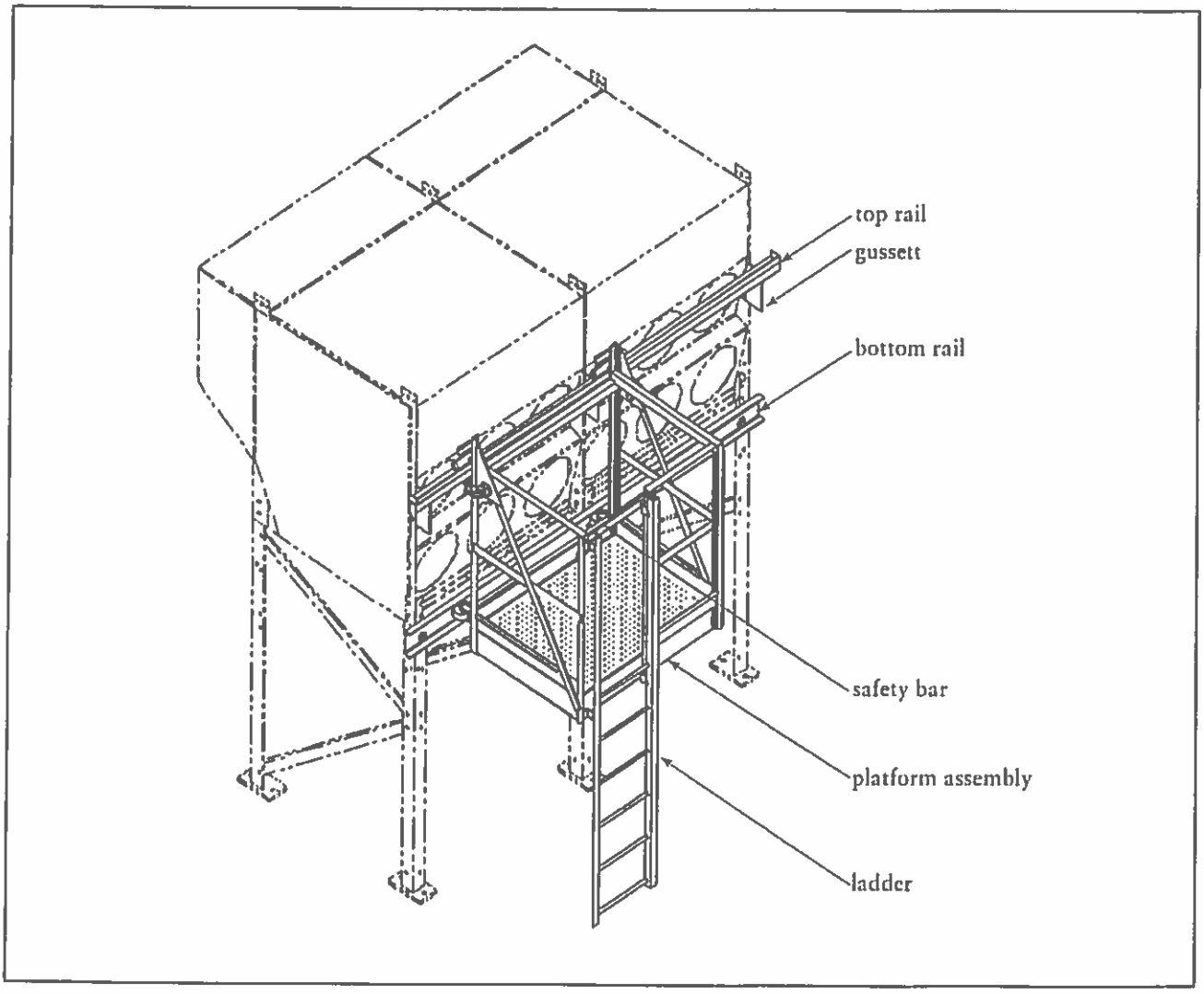

Mobile Platform

Cold Climate Kit

A cold climate kit provides heat to the pulse valves to prevent cold weather freeze up. The basic kit, for use in applications that have a moderate amount of moisture in the compressed-air supply, consists of a small heating element and thermostat installed in the solenoid enclosure. The basic kit is factory-installed and supplied with the appropriate solenoid wiring instructions.

A heavy-duty kit is available for applications that have moderate-to-high amounts of moisture in the compressed-air supply and consists of the basic kit plus a heat cable to deliver heat to the large pulse valves. This kit is customer-installed and detailed installation instructions are provided.

1. Install the power connection kit on the heat cable following the manufacturer's instructions.
2. Start with the upper right-hand valve, wrap heat cable around the valve as shown in Detail A. Pull heat cable tight.

   Note: Double wrap between round coupling and square valve cover.
3. Position a 3-in hose clamp around the double wrapped heat cable and tighten securely.
4. Wrap remaining valves using the same technique in the order shown in Detail B.
5. Drill a 1-in diameter hole in the back of the junction box. See Detail C. Assemble the power connection kit following the manufacturer's instructions.
6. Secure junction box to manifold using two 8-in hose clamps wrapped around the standoff.
7. Wrap 6-ft of pipe insulation tape around each heat-cable wrapped valve. Wrap the entire valve, double wrapping the hose-clamped heat cable. Secure with cable ties.

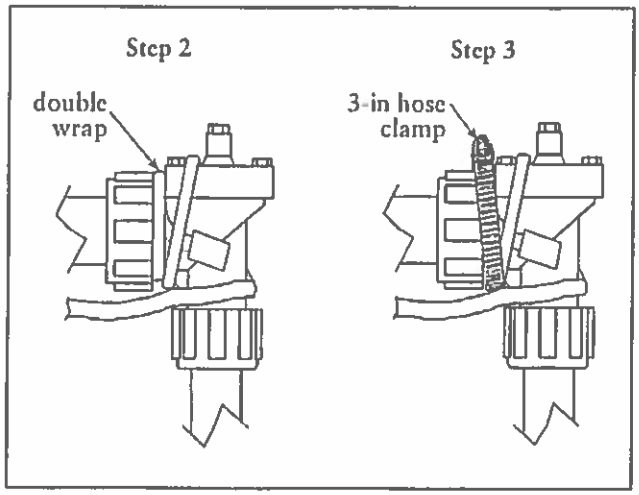

Cold Climate Kit, Detail A

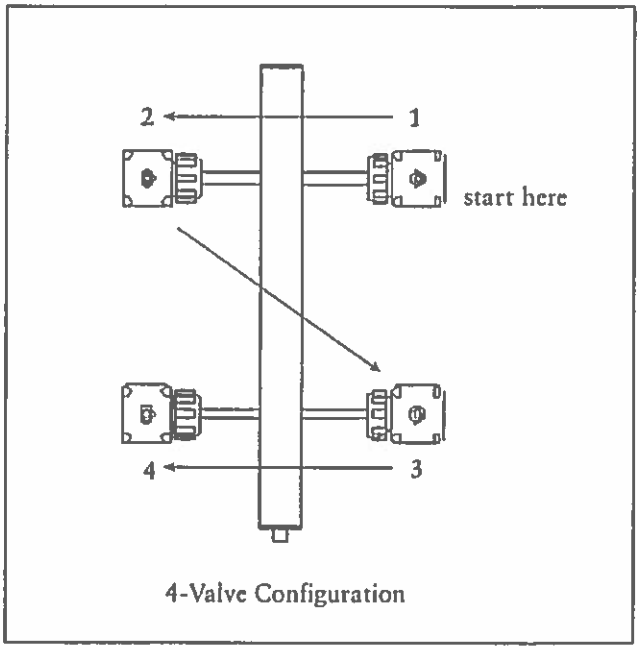

Cold Climate Kit, Detail B

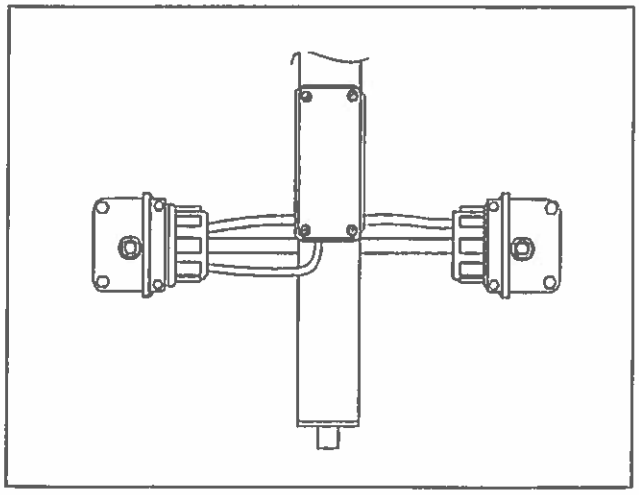

Cold Climate Kit, Detail C

Drum Sentry, Drum-Full Indicator

The drum sentry provides a visual readout of the 55-gallon drum contents. When the dust level in the drum covers the opening on the bottom of the drum sentry, the gauge indicator changes from E, empty to Full.

Note: Do not use the drum sentry on dust with low-bulk densities such as wood-dust shavings and cotton fibers.

1. Drill a 1 3/8-in diameter hole in the drum cover. Remove excess gasket material from the underside of the cover.
2. Apply silicone sealant to the top threads of the close nipple and thread into the gauge assembly hand tight.
3. Apply silicone sealant to the top of the drum cover around the 1 3/8-in diameter hole.

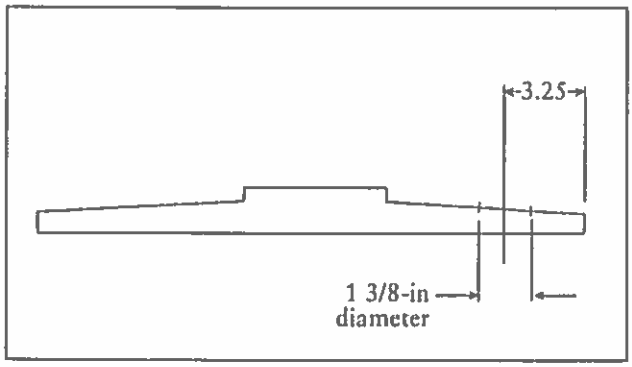

Drum Sentry Step 1

4. Place a 1/4-in thick washer on the close nipple and insert in the 1 3/8-in diameter hole.
5. Apply silicone sealant to the underside of the drum cover around the 1 3/8-in diameter hole and the threads of the close nipple.
6. Place a 1/4-in thick washer on the close nipple and thread the coupling on.
7. Use a pipe wrench to tighten coupling until the washers touch the drum cover. The gauge assembly should stand firmly upright.

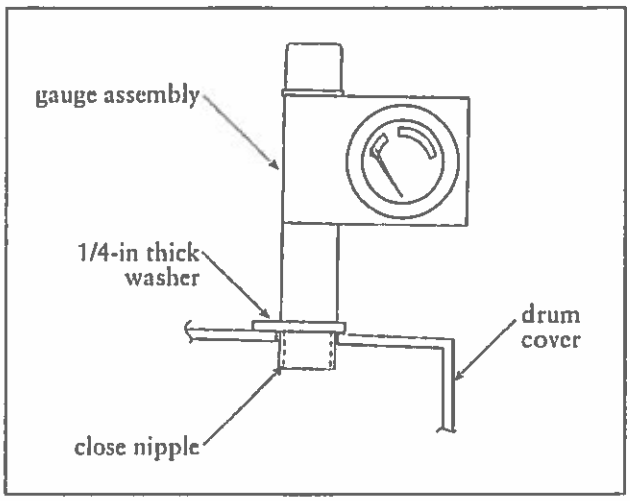

Drum Sentry Step 4

8. Apply silicone sealant to the treads of the nylon barbed nipple and thread onto the coupling hand tight.
9. Trim the 1-in diameter hose to extend into the drum at the desired drum-full level.

   Note: Dust with low-bulk density such as weld fume require the hose to be immersed a minimum of 6-in.
10. Place the cover on the drum and position under hopper.
11. Splice into the dirty-air chamber's pneumatic tubing and insert the nylon barbed tee.
12. Install 3/16-in diameter tubing between the open branch of the tee and the center barbed fitting on the gauge assembly. Trim excess tubing.

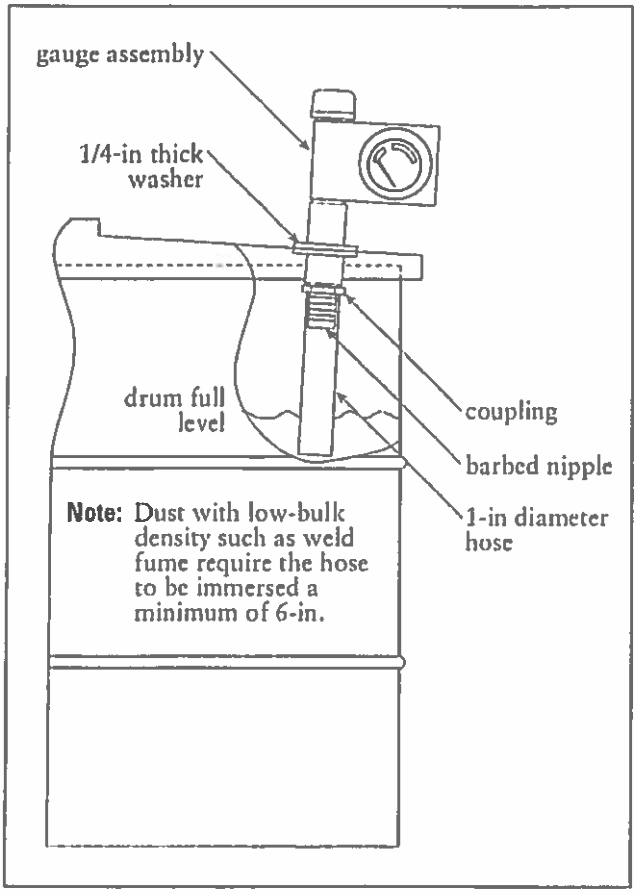

Drum Sentry Step 9

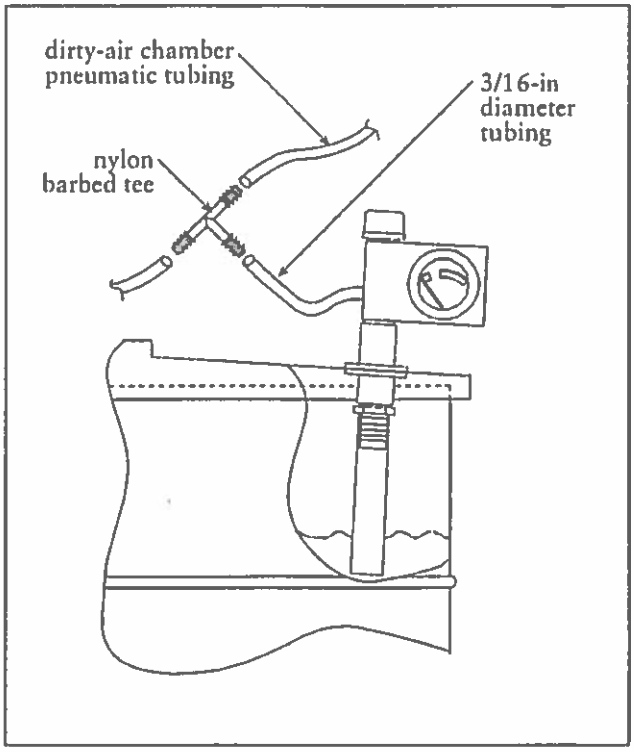

Drum Sentry Step 11

Troubleshooting

Problem	Probable Cause	Remedy
Blower fan and motor do not start	Improper motor wire size	Rewire using the correct wire gauge as specified by national and local codes.
	Not wired correctly	Check and correct motor wiring for supply voltage. See motor manufacturer's wiring diagram. Follow wiring diagram and the National Electric Code.
	Unit not wired for available voltage	Correct wiring for proper supply voltage.
	Input circuit down	Check power supply to motor circuit on all leads.
	Electrical supply circuit down	Check power supply circuit for proper voltage. Check for fuse or circuit breaker fault. Replace as necessary.
Blower fan and motor start, but do not stay running	Incorrect motor-starter installed	Check for proper motor starter and replace if necessary.
	Access doors are open or not closed tight	Close and tighten access doors. See Filter Installation on Page 24.
	Hopper discharge open	Install slide gate or drum cover arrangement to hopper discharge. See Hopper Installation on Page 13.
	Blower fan damper control not adjusted properly	Check airflow in duct. Adjust damper control until proper airflow is achieved and the blower-motor's amp draw is within the manufacturer's rated amps.
	Electrical circuit overload	Check that the power supply circuit has sufficient power to run all equipment.
Clean-air outlet discharging dust	Filter cartridges not installed correctly	See Filter Installation on Page 24.
	Filter cartridge damage, dents in the end caps, gasket damage or holes in pleated media	Replace filters as necessary. Use only genuine Donaldson replacement parts. See Filter Installation on Page 24.
	Access cover(s) loose	Tighten access doors securely. See Filter Installation on Page 24.
Insufficient airflow	Fan rotation backwards	Proper fan rotation is clockwise when looking down at the blower motor. See Preliminary Start-Up Check on Page 24.

Problem	Probable Cause	Remedy
Insufficient airflow continued	Access doors open or not closed tight	Check that all access doors are in place and secured. Check that the hopper discharge opening is sealed and that optional attachments are installed correctly. See Hopper Installation on Page 13.
	Fan exhaust area restricted	Check fan exhaust area for obstructions. Remove material or debris. Adjust damper flow control.
	Filter cartridges need replacement	Remove and replace using genuine Donaldson replacement filters. See Filter Installation on Page 24.
	Lack of compressed air	Check that a minimum of 90-psig is available. See Compressed Air Installation on Page 22.
	Pulse cleaning not energized	Use a voltmeter to check supply voltage to the timer board. Check and replace the fuse on the timer board if necessary. See Solid-State Timer Installation on Page 18.
	Dust storage area overfilled or plugged	Clean out dust storage area. See Dust Disposal on Page 27.
	Pulse valves leaking compressed air	Lock out all electrical power to the unit and bleed the compressed-air supply. Check for debris, valve wear, or diaphragm failure by removing the diaphragm cover on the pulse valves. Check for solenoid leaks or damage. If pulse valves or solenoid valves and tubing are damaged, replace.
	Solid-State Timer failure	Using a voltmeter, check supply voltage to the timer board. Check and replace the fuse on the timer board if necessary. If the fuse is good and input power is present, but output voltage to the solenoid valves is not, replace the timer board. See Solid-State Timer Installation on Page 18.
	Solid-State Timer out of adjustment	See Solid-State Timer and Solid-State Timer Wiring Diagram.
No display on the Delta P control	No power to the control	Use a voltmeter to check for voltage at Terminal TB1.
	Fuse blown	Check the fuse in the F1 fuse tower. Replace if necessary.

Troubleshooting, continued

Problem	Probable Cause	Remedy
Display on Delta P control does not read zero when at rest	Out of calibration	Disconnect pressure tubing. See Delta P Control on Page 20.
	With collector discharging outside, differential pressure is present from indoor to outdoor	Recalibrate with the pressure tubing attached as described in the Delta P Control section on Page 20.
Delta P control ON, but cleaning system does not start	Not wired to the timing board correctly	Connect the pressure switch on the timer board to Terminals 7 and 8 on TB3.
	Faulty relay	Using a multimeter, test relay for proper closure. Replace if necessary.
	Pressure tubing disconnected, ruptured, or plugged	Check tubing for kinks, breaks, contamination, or loose connections.
Pulse-cleaning never stops	Pressure switch terminals on the timer board jumpered	Remove jumper wire on solid-state timer board before wiring to the Delta P control.
	Pressure switch not wired to the timer board correctly	Connect the pressure switch on the timer board to Terminals 7 and 8 on TB3.
	High or low setpoint not adjusted for system conditions	Adjust setpoints to current conditions.
	Pressure tubing disconnected, ruptured, or plugged	Check tubing for kinks, breaks, contamination, or loose connections.
Alarm light is ON	Alarm setpoint too low	Adjust to a higher value.
	Excess pressure drop	Check cleaning system and compressed-air supply. Replace filter cartridges if filters do not clean down.
	Pressure tubing disconnected, ruptured or plugged	Check tubing for breaks, contamination, or loose connections.
Delta P arrow keys do not work	Improper operation	Press and hold one of the three setpoint keys to use arrow keys.
	Programming keys disabled	Remove the Program Disable jumper from Terminals 3 and 4 on TB2.

Problem	Probable Cause	Remedy
Cleaning light is ON, but cleaning system not functioning	Improper wiring	Check wiring between the Delta P Control and the timer board, and between the timer board and solenoid valve coils.
	Defective solenoids	Check all solenoid coils for proper operation.
	Timer board not powered	Check power ON light on timer board's LED display. If not illuminated, check the supply voltage to the timer board. Check the fuse on the timer board. Replace if necessary.
	Timer board defective	If LED is illuminated, observe the output display. Install a temporary jumper across the pressure switch terminals. Output levels should flash in sequence. Check output using a multimeter set to 150-Volt AC range. Measure from SOL COM to a solenoid output. The needle will deflect when LED flashes for that output if voltage is present. If LED's do not flash, or if no voltage is present at output terminals during flash, replace the board.

Service Notes

Date	Service Performed	Notes

Date	Service Performed	Notes

The Donaldson Torit Warranty

Donaldson Company, Inc. warrants to the original purchaser that for a period of ten (10) years from the date of shipment, the product described herein shall be free from defects in materials and workmanship if properly installed, maintained and operated under normal conditions. Donaldson Company makes no warranty against damage due to corrosion, abrasion, normal wear and tear, modification or misapplication and makes no warranty whatsoever as to any goods manufactured or supplied by others. After Donaldson Company has been given adequate opportunity to remedy any defects in material or workmanship, Donaldson Company retains the option to accept the return of the product, with return freight paid by the purchaser, and to refund the purchase price for the product after confirming the product is returned undamaged and in usable condition. Such a refund will be the full extent of Donaldson Company's liability and Donaldson Company shall not be liable for any other costs, expenses or damages whether direct, indirect, consequential or otherwise. The terms of this warranty may be modified only by a special warranty document signed by a Director, General Manager or Vice President of Donaldson Company. Failure to use genuine Donaldson replacement parts will cancel this warranty. THERE EXIST NO OTHER REPRESENTATIONS, WARRANTIES OR GUARANTEES EXCEPT AS STATED IN THIS PARAGRAPH AND ALL OTHER WARRANTIES INCLUDING MERCHANTABILITY AND FITNESS FOR A PARTICULAR PURPOSE, WHETHER EXPRESS OR IMPLIED ARE HEREBY EXPRESSLY EXCLUDED AND DISCLAIMED.

Parts and Service

For genuine Donaldson replacement filters
and parts, call the Parts Express Line

800-365-1331 USA
800-343-3639 Mexico

www.donaldsontorit.com

For faster service, have unit's model and serial number, part number, description, and quantity available.

Donaldson.
Filtration Solutions

Donaldson Company, Inc.
Industrial Air Filtration
PO Box 1299
Minneapolis, MN 55440-1299
dustmktg@mail.donaldson.com

Donaldson Company, Inc. is the leading designer and manufacturer of dust, mist, and fume collection equipment used to control industrial-air pollutants. Our equipment is designed to help reduce occupational hazards, lengthen machine life, reduce in-plant maintenance requirements, and improve product quality.

© 2002 Donaldson Company, Inc.
IOM-42726-00, Revision 9
Printed in USA
April 2002

Attachment ID 5

Fuel Analysis or Specification - Fuel Oil Certificates

Intertek

Report of Analysis

Client: Motiva Enterprises, LLC

Client Reference Number: 392296

Vessel: EVERGREEN STATE
Our Reference Number: US240-0009466
Lab Reference Number: 2016-JACK-000071

Description	Method	Test	Result	Units
CBOB Regular 13.5 20-Feb-2016 Evergreen State Composite Before Discharge				
2016-JACK-000071-001	ASTM D4052	API Gravity @ 60°F	65.2	°API
	ASTM D4176	Appearance	Clear, Bright & Free of Entrained Matter	
Premium CBOB 13.5 20-Feb-2016 Evergreen State Composite Before Discharge				
2016-JACK-000071-002	ASTM D4052	API Gravity @ 60°F	60.5	°API
	ASTM D4176	Appearance	Clear, Bright & Free of Entrained Matter	
ULSD 20-Feb-2016 Evergreen State Composite Before Discharge				
2016-JACK-000071-003	ASTM D4052	API Gravity @ 60°F	36.8	°API
	ASTM D7039	Sulfur	3.9	mg/kg
	ASTM D93	Procedure Used	A	
		Corrected Flash Point	149	°F
	ASTM D4176	Procedure Used	2	
		Testing Site	Laboratory	
		Test Temperature	70	°F
		Appearance: Clear and Bright	Clear, Bright & Free of Entrained Matter	
		Free Water and/or Particulates	No Water or Particles Present	
		Haze Rating	1	
		Special Observations	No Special Observations	

Signed: _____ Date _____

Intertek
Lyronda Major, Chemist

1708 Marshall Street, Jacksonville, Florida 32206 USA
Tel: +1 904 353 1220 Fax: +1 904 353 1230

BUCKEYE PARTNERS, L.P.
SPECIFICATIONS FOR FUNGIBLE ULTRA LOW SULFUR DIESEL (NON-ROAD)
GRADE 193

PRODUCT PROPERTY	ASTM TEST METHODS	TEST RESULTS MINIMUM	TEST RESULTS MAXIMUM	NOTE
Gravity, API @ 60°F	D287, D4052, D1298	30		
Flash Point, °F(at Origin)	D93 or D56	130		1
Color, ASTM	D1500		2.5	
Viscosity, cst @ 104°F	D445	1.9	4.1	
Cloud Point, °F (Sept thru March)	D2500, D5771, D5772,		+15 °F / -9 °C	
(April thru August)	D5773, D3117		+20 °F / -7 °C	
Pour Point, °F (Sept thru March)	D5985, D5949, D5950, D97		0 °F /-18 °C	
(April thru August)			+10°F/ -12 °C	
Total Sulfur, ppm (at receipt)	D5453, D312, D4294 D2622, D7039		11	3,7,8
Corrosion, 3 hrs. @ 122°F	D130		1	
Oxidation Stability, mg/100 ml OR	D2274		2.5	
Thermal Stability, 90 minutes 150°C Pad rating OR	DuPont		7	
Thermal Stability, Y/Green	D6468	73%		
W Unit		65%		
Carbon Residue, wt. % on 10% bottom	D524 or D4530		0.35	
Ash, wt. %	D482		0.01	
Sediment and Water, % by volume	D2709		0.05	
Cetane Number or Index	D4737,D613,D6890,D7170	40		
Aromatics (Vol%)	D1319		35.0	
or Aromatics by Cetane Index	D976	40		
Distillation, °F	D86			
50% recovered		Report		
90% recovered		540	640	
End Point			690	
or Simulated Distillation, °C(°F)	D2887			
50% recovered			Report	
90% recovered		300(572)	356(673)	
End Point			421(790)	
Haze Rating @ 77°F Procedure 2	D4176		2	
Biodiesel (FAME) %	D7371, EN14078		0.0	10,11
Color Visual		Undyed		4
Additives				5, 6
NACE	TM0172-2001	B+		9

NOTES:

1. Test method D-56 may be used as an alternate to D-93 with the same limits. Test method D-93 is the referee method. Minimum flash at delivery is 125 °F.
2. Intended to be consistent with ASTM D975 Grade No. 2 middle distillate fuels, unless otherwise noted.
3. Receipts from Wolverine Pipe Line will be accepted at a maximum of 12.0 ppm sulfur.
4. Product must exhibit no visible evidence of dye.
5. Use of static dissipater additive or conductivity improver is prohibited.
6. The use of lubricity improver additives is prohibited.
7. This product is for Non-Road use and should be designated as DNR015 in the EPA's Designate and Track system.
8. Sulfur level at delivery will vary depending upon the origin and delivery location.
9. All products (except aviation grades 152, 153, 155 and 182) must meet a minimum level of corrosion protection, indicated by a minimum rating of B+ as determined by NACE Standard Test Method TM0172-2001 (Determining Corrosive Properties of Cargoes in Petroleum Product Pipelines).
10. Biofuel Components (e.g. biodiesel, FAME) are not permitted in this product. Results must be <LDL of the test method (i.e. <1.0% per D7371, or <0.50% per EN14078). FAME limits go into effect at Linden, NJ; Booth, PA; Macungie, PA; and New Haven, CT on June 1, 2014. FAME Limits will apply to all other receipt locations on September 5, 2014.
11. Shipments of this Grade Code are limited to less than 5.0% renewable diesel. Renewable diesel is a liquid fuel derived from 100% hydrotreated biomass that meets the registration requirements for fuels and fuel additives established by the EPA under Section 211 of the Clean Air Act and the requirements of ASTM D975. Fuel containing fatty acid esters (FAME, FAEE, or other esters) is prohibited.