TECHNICAL EVALUATION

AND

PRELIMINARY DETERMINATION

El Paso Broward Energy Center

775-Megawatt Electrical Power Plant

Broward County

DEP File No. 0112545-001-AC (PSD-FL-316)

Department of Environmental Protection
Division of Air Resources Management
Bureau of Air Regulation

August 17, 2001

TECHNICAL EVALUATION AND PRELIMINARY DETERMINATION

1. APPLICATION INFORMATION

1.1 Applicant Name and Address

El Paso Merchant Energy Company
1001 Louisiana Street
Houston, Texas 77002

Authorized Representative: *William Mack, Sr., Managing Director*

1.2 Reviewing and Process Schedule

03-28-01:	Date of Receipt of Application
06-27-01:	Application Complete
08-17-01:	Distributed Intent to Issue

2. FACILITY INFORMATION

2.1 Facility Location

Refer to Figures 1 and 2 below. The El Paso Broward Energy Center will be located in Broward County near the Southeast coast of Florida. The location is approximately 67 kilometers North-northeast of the Everglades National Park. The proposed

in Deerfield Beach. The

UTM coordinates for this facility are Zone km East; km North.

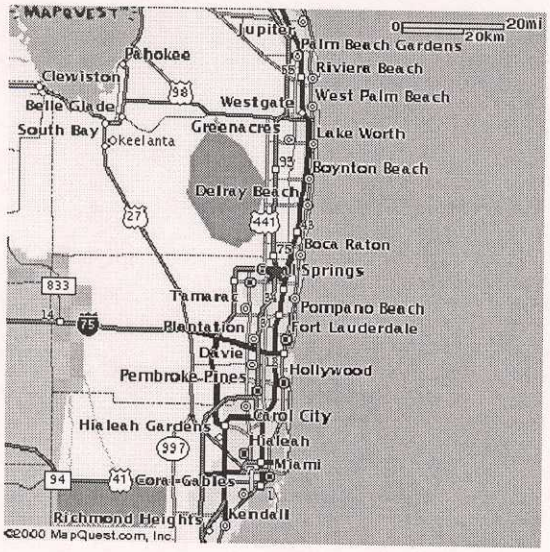

Figure 1 – Regional Location

2.2 Standard Industrial Classification Codes (SIC)

Industry Group No.	49	Electric, Gas, and Sanitary Services
Industry No.	4911	Electric Services

2.3 Facility Category

This proposed project will generate 775 megawatts (nominal MW) of electrical power. The facility is classified as a Major or Title V Source of air pollution because emissions of at least one regulated air pollutant, such as particulate matter (PM/PM_{10}), sulfur dioxide (SO_2), nitrogen oxides (NO_X), carbon monoxide (CO), or volatile organic compounds (VOC) exceeds 100 TPY.

This facility is within an industry included in the list of the 28 Major Facility Categories per Table 62-212.400-1, F.A.C. Because emissions are greater than 100 TPY for at least one criteria pollutant, the facility is also a major facility with respect to Rule 62-212.400, F.A.C., Prevention of Significant Deterioration (PSD), and a Best Available Control Technology (BACT) determination is required. Given that emissions of at least one single criteria pollutant will exceed 100 TPY, PSD Review and a BACT determination are required for each pollutant emitted in excess of the Significant Emission Rates listed in Table 62-212.400-2, F.A.C. These values are: 40 TPY for NO_X, SO_2, and VOC; 25/15 TPY of PM/PM_{10}; 7 TPY of Sulfuric Acid Mist (SAM); and 100 TPY of CO.

3. PROJECT DESCRIPTION

This permit addresses the following emissions units:

ID	Emission Unit Description
001	**Combined Cycle Unit No. CC-1** consists of a natural gas-fueled General Electric Model PG7241FA (GE 7FA) combustion turbine-electrical generator with a nominal capacity of 175 MW, an unfired heat recovery steam generator (HRSG), a separate steam turbine-electrical generator and a 135-foot stack.
002	**Simple Cycle Unit No. SC-1** consists of a natural gas-fueled GE 7FA combustion turbine-electrical generator with a nominal capacity of 175 MW and a 135-foot stack.
003	**Simple Cycle Unit No. SC-2** consists of a natural gas-fueled GE 7FA combustion turbine-electrical generator with a nominal capacity of 175 MW and a 135-foot stack.
004	**Simple Cycle Unit No. SC-3** consists of a natural gas-fueled GE 7FA combustion turbine-electrical generator with a nominal capacity of 175 MW and a 135-foot stack.
005	**Cooling Tower –** one 5-cell freshwater mechanical draft cooling tower.
006	**Other Emissions Units** including one 2600-hp diesel generator, one 250-hp diesel fire pump, one gas heater, aqueous ammonia storage tank and small diesel storage tanks.

Significant emission rate increases per Table 212.400-2, F.A.C. will occur for CO, SO_2, SAM, PM/PM_{10} and NO_X. A BACT determination is required for each of these pollutants. An air quality impact review is also required for CO, PM/PM_{10}, NO_X, and SO_2.

Each turbine will be equipped with Dry Low NO_X (DLN-2.6) combustors and evaporative inlet cooling systems. Each will have a maximum heat input rating of approximately 1,700 mmBtu per hour while operating at 100% load. El Paso proposes to operate the simple cycle units up to 5,000 hours per year per unit and to operate the combined cycle unit continuously. The key components of the GE MS 7001FA (a predecessor of the PG 7241FA) are identified in Figure 3. An exterior view is also shown. The project includes highly automated controls, described as the GE Mark VI Gas Turbine Control System to fulfill all of the gas turbine control requirements.

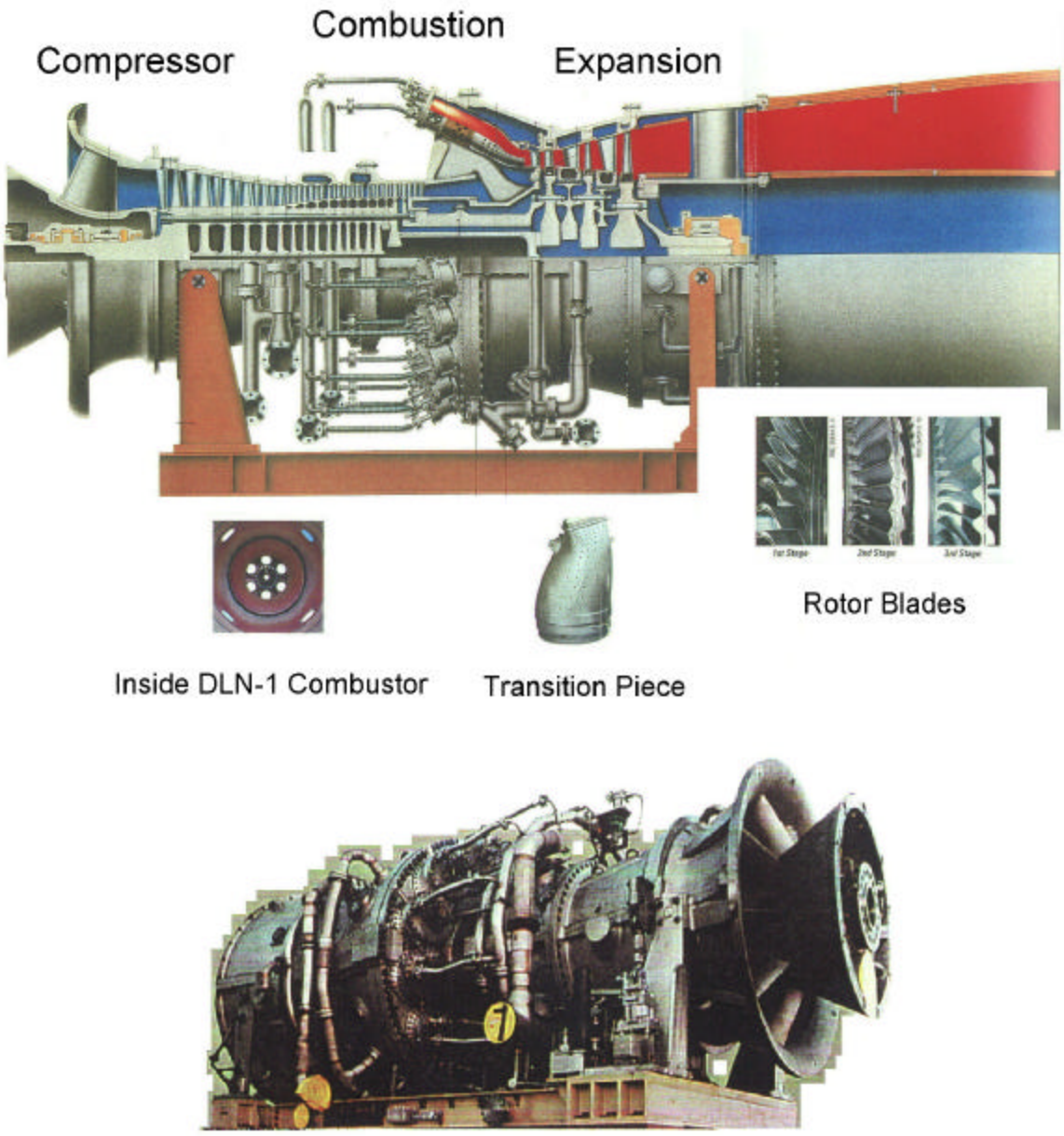

Figure 3 - Internal and External Views of Early GE 7FA

4. PROCESS DESCRIPTION

A gas turbine is an internal combustion engine that operates with rotary rather than reciprocating motion. Ambient air is drawn into the 18-stage compressor of the GE 7FA where it is compressed by a pressure ratio of about 15 times atmospheric pressure. The compressed air is then directed to the combustor section, where fuel is introduced, ignited, and burned. The combustion section consists of 14 separate can-annular combustors.

Flame temperatures in a typical combustor section can reach 3600 degrees Fahrenheit (^{o}F). Units such as the 7FA operate at lower flame temperatures, which minimize NO_X formation. The hot combustion gases are then diluted with additional cool air and directed to the turbine section at temperatures of approximately 2400 ^{o}F. Energy is recovered in the turbine section in the form of shaft horsepower, of which typically more than 50 percent is required to drive the internal compressor section. The balance of recovered shaft energy is available to drive the external load unit such as an electrical generator.

Figure 4 is a simplified process flow diagram of the proposed El Paso project. Three of the units will operate in the simple cycle mode. Cycle efficiency, defined as a percentage of useful shaft energy output to fuel energy input, is approximately 35 percent for F-Class combustion turbines in the simple cycle mode. In addition to shaft energy output, 1 to 2 percent of fuel input energy can be attributed to mechanical losses. The balance is exhausted from the turbine in the form of heat.

One of the units will operate in combined cycle mode in which the combustion turbine drives an electric generator while the exhausted gases are used to raise additional steam in a heat recovery steam generator. The steam, in-turn, drives a separate steam turbine-electrical generator producing additional electrical power. In combined cycle mode, the thermal efficiency of the 7FA can exceed 56 percent.

At high ambient temperature, the units cannot generate as much power because of lower compressor inlet air density. To compensate for the loss of output (which can be on the order of 20 MW compared to referenced temperatures), an inlet air cooler (fogger or chiller) can be installed ahead of the combustion turbine inlet. At an ambient temperature of 95 ^{o}F, roughly 15 MW of power can be regained per simple cycle unit by using a chiller to cool the inlet air to 50 ^{o}F.

Other possibilities include placing a gas-fired duct burner between the combustion turbine and the HRSG, power augmentation and peaking. Power augmentation is accomplished by injecting some steam from the HRSG into the rotor (power) section of the combustion turbine. Peaking is simply running the unit at greater than design fuel input. The additional process information related to the combustor design, and control measures to minimize pollutant emissions are given in the attached draft BACT determination.

5. RULE APPLICABILITY

The proposed project is subject to preconstruction review requirements under the provisions of Chapter 403, Florida Statutes, and Chapters 62-4, 62-204, 62-210, 62-212, 62-214, 62-296, and 62-297 of the Florida Administrative Code (F.A.C.).

This project will be located in Broward County; an area designated as attainment for all criteria pollutants in accordance with Rule 62-204.360, F.A.C. The proposed project is subject to PSD review under Rule 62-212.400, F.A.C. for the reasons given in Section 2.3, Facility Category, above.

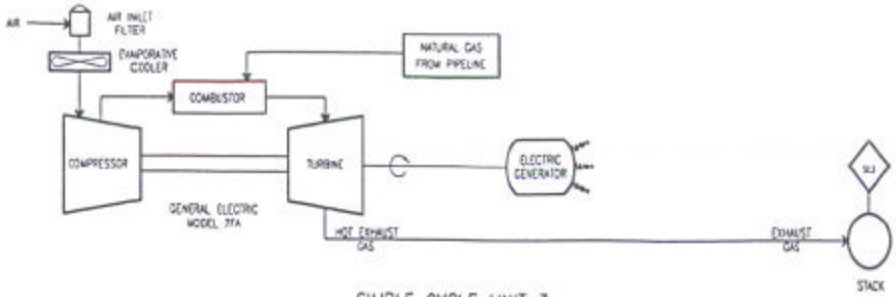

SIMPLE CYCLE UNIT 3

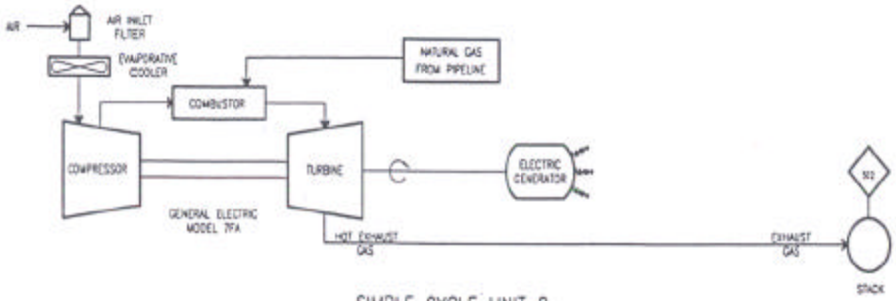

SIMPLE CYCLE UNIT 2

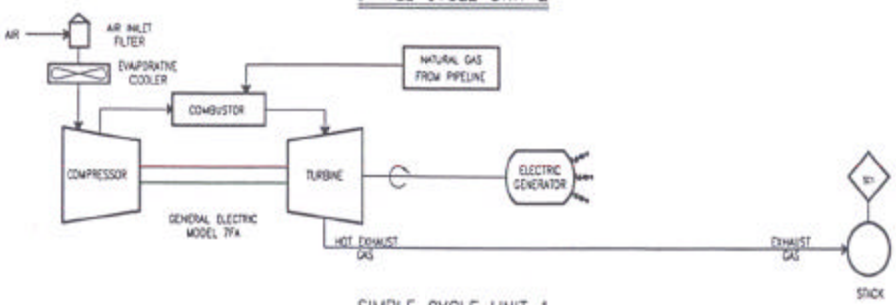

SIMPLE CYCLE UNIT 1

LEGEND

EMISSION POINT

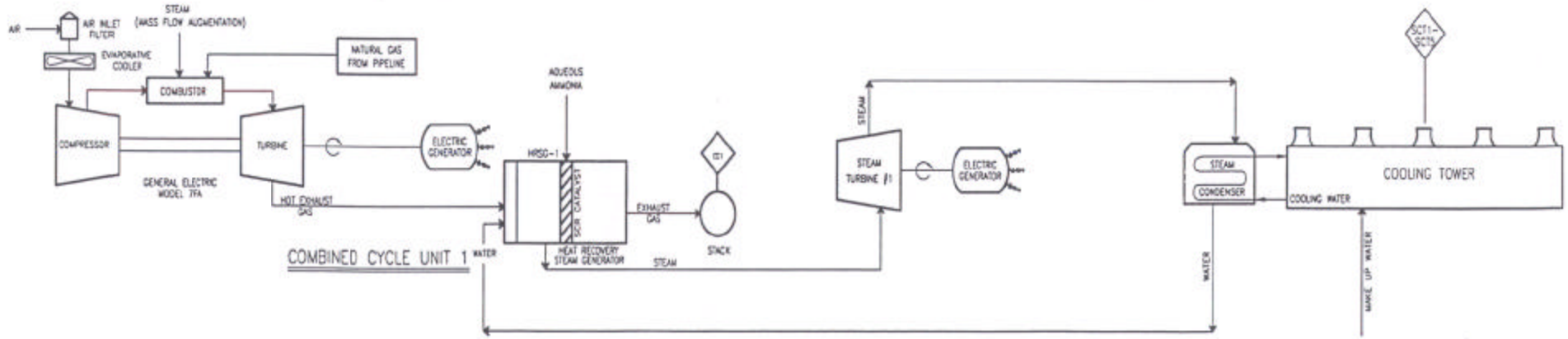

COMBINED CYCLE UNIT 1

This PSD review consists of an evaluation of resulting ambient air pollutant concentrations, and increases with respect to the National Ambient Air Quality Standards and Increments as well as a determination of Best Available Control Technology (BACT) for PM/PM_{10}, CO, SO_2, SAM and NO_X. An analysis of the air quality impact from proposed project upon soils, vegetation and visibility is required along with air quality impacts resulting from associated commercial, residential, and industrial growth

The emission units affected by this air construction permit shall comply with all applicable provisions of the Florida Administrative Code (including applicable portions of the Code of Federal Regulations incorporated therein) and, specifically, the following Chapters and Rules related to air:

5.1 State Regulations

Chapter 62-4	Permits.
Rule 62-204.220	Ambient Air Quality Protection
Rule 62-204.240	Ambient Air Quality Standards
Rule 62-204.260	Prevention of Significant Deterioration Increments
Rule 62-204.800	Federal Regulations Adopted by Reference
Rule 62-210.300	Permits Required
Rule 62-210.350	Public Notice and Comments
Rule 62-210.370	Reports
Rule 62-210.550	Stack Height Policy
Rule 62-210.650	Circumvention
Rule 62-210.700	Excess Emissions
Rule 62-210.900	Forms and Instructions
Rule 62-212.300	General Preconstruction Review Requirements
Rule 62-212.400	Prevention of Significant Deterioration
Rule 62-213	Operation Permits for Major Sources of Air Pollution
Rule 62-214	Requirements For Sources Subject To The Federal Acid Rain Program
Rule 62-296.320	General Pollutant Emission Limiting Standards
Rule 62-297.310	General Test Requirements
Rule 62-297.401	Compliance Test Methods
Rule 62-297.520	EPA Continuous Monitor Performance Specifications

5.2 Federal Rules

40 CFR 60	Applicable sections of Subpart A, General Requirements, Subparts Dc, and GG
40 CFR 72	Acid Rain Permits (applicable sections)
40 CFR 73	Allowances (applicable sections)
40 CFR 75	Monitoring (applicable sections including applicable appendices)
40 CFR 77	Acid Rain Program-Excess Emissions (future applicable requirements)

5.2 Broward County Rules

Section 27-175(g)	General Prohibitions, Cumulative Impacts
Section 27-176(c)(2)b.	Permit Application Requirements, Cumulative Impacts
Section 27-176(c)(2)c.	Permit Application Requirements, Pollution Prevention Plan
Section 27-178	Pollution Prevention Planning

6. SOURCE IMPACT ANALYSIS

6.1 Emission Limitations

The proposed project will emit the following PSD pollutants (Table 212.400-2, F.A.C.): PM/PM_{10}, SO_2, NO_X, CO, SAM, and negligible quantities of fluorides (F), mercury (Hg) and lead (Pb). The applicant's proposed annual emissions are summarized in the Table below and form the basis of the source impact review. The Department's proposed permitted allowable emissions are summarized in the Draft BACT document and Specific Condition Nos. 10-16 Section III (Combined Cycle) and Specific Condition Nos. 8-12 Section III (Simple Cycle) of Draft Permit PSD-FL-316.

6.2 Emission Summary

The annual emissions increases for all PSD pollutants as a result of the project are presented below:

PROJECT EMISSIONS (TPY) AND PSD APPLICABILITY

Pollutant	Emissions [1]	PSD Significance	PSD Review?
PM/PM_{10} (filterable plus condensable)	227	25	Yes
SO_2	87	40	Yes
NO_X	534 [2]	40	Yes
CO	420	100	Yes
Ozone (VOC)	36	40	No
Sulfuric Acid Mist	13	7	Yes
Total Fluorides	~0	3	No
Mercury	~0	0.1	No
Lead	0.3	0.6	No
HAPs	8	NA	NA

1. Based on 5,000 hours of natural gas firing per year per simple cycle unit, 8,760 hours per year for the combined cycle unit. Includes emergency diesel engines and cooling tower.
2. NO_X emissions will be 505 TPY based on Department's proposed BACT determination.

6.3 Control Technology

The PSD regulations require new major stationary sources to undergo a control technology review for each pollutant that may be potentially emitted above significant amounts. The control technology review requirements of the PSD regulations are applicable to emissions of NO_X, SO_2, CO, SAM, and PM/PM_{10}. Emissions control will be accomplished primarily by good combustion of clean natural gas. The combustors will operate in lean pre-mixed mode to minimize the flame temperature and nitrogen oxides formation potential. A selective catalytic reduction (SCR) system will be installed within the heat recovery steam generator of the single combined cycle unit to effect additional NO_X control. A full discussion is given in the separate Draft Best Available Control Technology (BACT) Determination that is incorporated into this document by reference.

6.4 Existing Air Quality in the Vicinity of the project

6.4.1 Description of Vicinity

Refer to Figures 1 and 2 above. The Broward Energy Center will be in the City of Deerfield Beach, which has a population of 50,000 to 70,000 people compared to the 1.6 million in Broward County. Deerfield Beach is located between Boca Raton and Pompano Beach and is also near the cities of Coral Springs and Coconut Creek.

Refer to Figure 5 below. The proposed site is East of the Florida Turnpike and about one mile South of the Sawgrass Expressway.

A landfill and the North Broward Resource Recovery Facility are located immediately to the South of the proposed site and include the entire quadrant bounded by the Turnpike, Hilton Road, Powerline Road and Sample Road. Pavex Asphalt, a concrete plant, and the proposed Enron and El Paso sites are located along the North side of Hilton Road (Northwest 48th Street) and across the lake from the Lakeview community. Hardrives Asphalt is located nearby on Powerline Road and South of 10th Street.

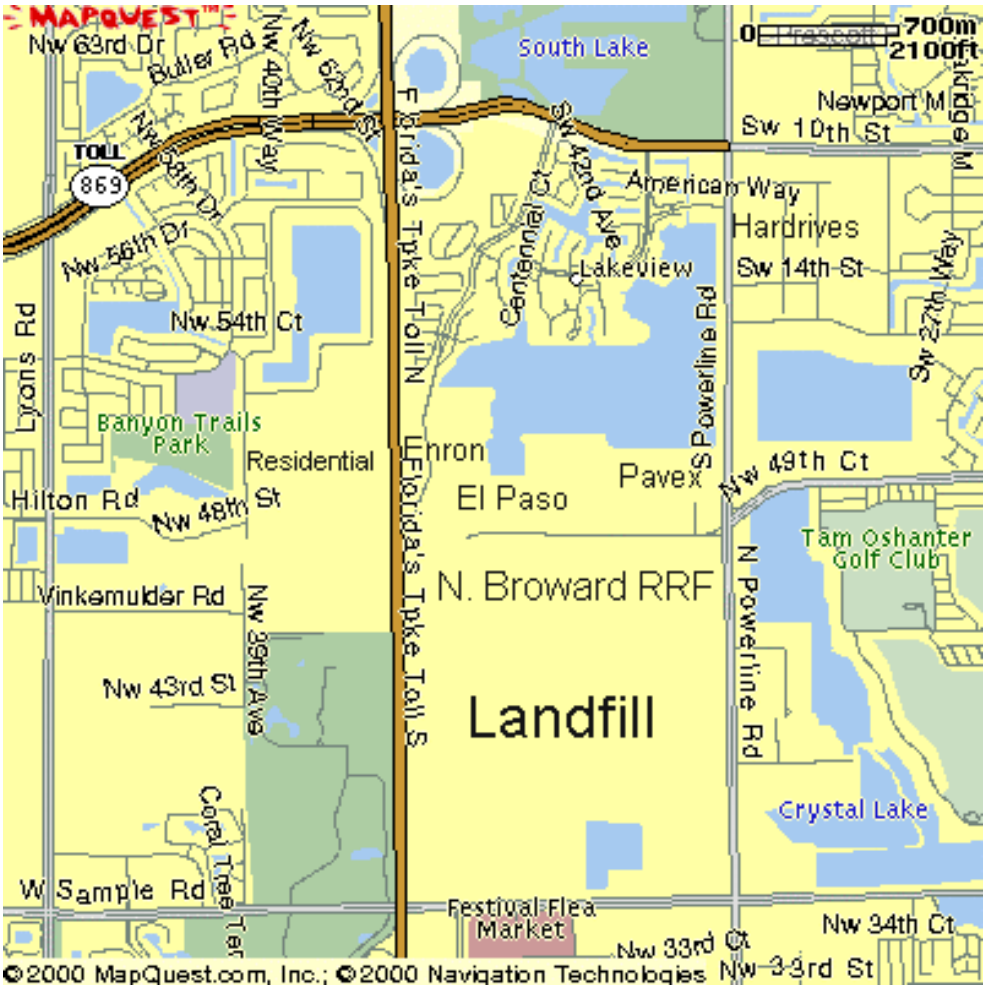

Figure 5 – Vicinity of Proposed El Paso Project

The nearest residential community is the Lakeview development immediately North of the proposed site. There are other residential communities immediately West of the Turnpike as well as East of Powerline Road. Following is a picture of the landfill and the North Broward RRF taken from the lake East of Powerline Road between Hilton Road and approximately Southwest 14th Street. The second picture was also taken from approximately the same point towards homes in Lakeview that lie on the Northwest corner of the Lake.

Figure 6 – N. Broward RRF and Landfill

Figure 7 – Lakeview from Powerline Road

6.4.2 Climate

The average annual high temperature for Deerfield Beach is 84 degrees and the average low is 66 degrees. Winds are predominately out of the East. Refer to Figure 8 below.

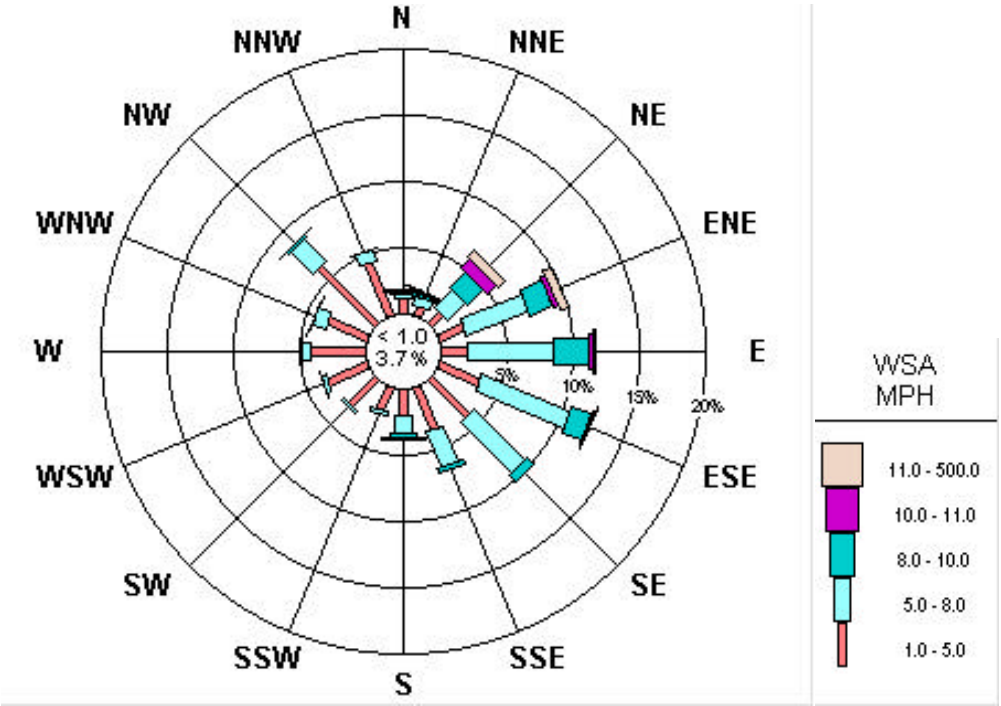

Figure 8 – Broward County Wind Rose – April 2000 to May 2001

6.4.3 Major Stationary Sources in Broward County

The current largest sources of air pollutants in Broward County are listed below:

MAJOR SOURCES OF SO_2 IN BROWARD COUNTY (1999)

Owner/Company	Site Name	Tons per year
Florida Power & Light	FP&L Port Everglades Plant	19856
Florida Power & Light	FP&L Lauderdale Plant	78
Wheelabrator S. Broward Inc.	S. Broward Resource Recovery Facility	47
Owens Corning	Owens corning Trumbull Division	38
Hardrives Asphalt Co.	Hardrives Deerfield Plant	11
Wheelabrator N. Broward, Inc	N. Broward Resource Recovery Facility	8
Waste Management Inc. of Florida	Central Sanitary Landfill & Recycling	7
East Coast Asphalt	East Coast Asphalt	6
Pavex Corporation	Pavex Corporation	6
Weekly Asphalt Paving, Inc.	Weekly Asphalt Plant No. 1	4
Enron (Future)	Pompano & Deerfield Projects	**~330**
El Paso (Future)	Broward Energy Center (Deerfield)	**~90**

MAJOR SOURCES OF NO_X IN BROWARD COUNTY (1999)

Owner/Company	Site Name	Tons per year
Florida Power & Light	FP&L Port Everglades Plant	7689
Florida Power & Light	FP&L Lauderdale Plant	3819
Wheelabrator S. Broward Inc.	S. Broward Resource Recovery Facility	1491
Wheelabrator N. Broward, Inc	N. Broward Resource Recovery Facility	1438
Waste Management Inc. of Florida	Central Sanitary Landfill & Recycling	121
S. Florida Water Mgt. District	SFWMD Pump Station S-9	65
S. Florida Water Mgt. District	SFWMD Pump Station S-8	50
Broward County	N. Regional Wastewater Treatment Plant	14
South Broward Hospital District	Memorial Regional Hospital	11
Hardrives Asphalt Co.	Hardrives Deerfield Plant	8
Enron (Future)	Pompano & Deerfield Projects	**~1145**
El Paso (Future)	Broward Energy Center (Deerfield)	**~505**

Total NO_X emissions were 191 tons per day including traffic during the 1997 ozone season.

MAJOR SOURCES OF VOC IN BROWARD COUNTY (1999)

Owner/Company	Site Name	Tons per year
Coastal Fuels Marketing, Inc.	Coastal Fuels (Belcher)	182
Florida Power & Light	FP&L Port Everglades Plant	116
Motiva Enterprises, LLC	Motiva Enterprises, Port Everglades	113
Loewenstein, Inc.	Loewenstein, Inc.	82
Marathon Ashland Petroleum, LLC	Marathon Ashland. LLC	81
Sun Graphics, Inc.	Sun Graphics, Inc.	81
Mobil Oil Corporation	Mobil Oil Corporation	75
Chevron Products Company	Chevron Products Company	65
Amerada Hess Corporation	Amerada Hess – Ft. Lauderdale Terminal	64
Transmontaigne Terminalling, Inc.	Port Everglades Terminal	48
Enron (Future)	Pompano & Deerfield Projects	**~36**
El Paso (Future)	Broward Energy Center (Deerfield)	**~36**

Total VOC emissions were 347 tons per day including traffic during the 1997 ozone season.

MAJOR SOURCES OF PM IN BROWARD COUNTY (1999)

Owner/Company	Site Name	Tons per year
Florida Power & Light	FP&L Port Everglades Plant	1629
Florida Power & Light	FP&L Lauderdale Plant	257
Continental Cement Co.	Continental Cement	24
FHP Manufacturing	FHP Manufacturing	19
Wheelabrator N. Broward, Inc	N. Broward Resource Recovery Facility	19
Steel fabricators, LLC	Steel Fabricators, LLC	13
Sun Graphics, Inc.	Sun Graphics, Inc.	11
Wheelabrator S. Broward Inc.	S. Broward Resource Recovery Facility	4
Owens Corning	Owens corning Trumbull Division	4
Pavex Corporation	Pavex Corporation	4
Enron (Future)	Pompano & Deerfield Projects	**~110**
El Paso (Future)	Broward Energy Center (Deerfield)	**~130 (EPA-5)**

6.4.4 Air Quality Monitoring in Broward County

Broward County has 26 monitors at 14 sites measuring CO, PM, ozone, lead, SO_2 and NO_2. The 2001 Broward County monitoring network is shown in Figure 9.

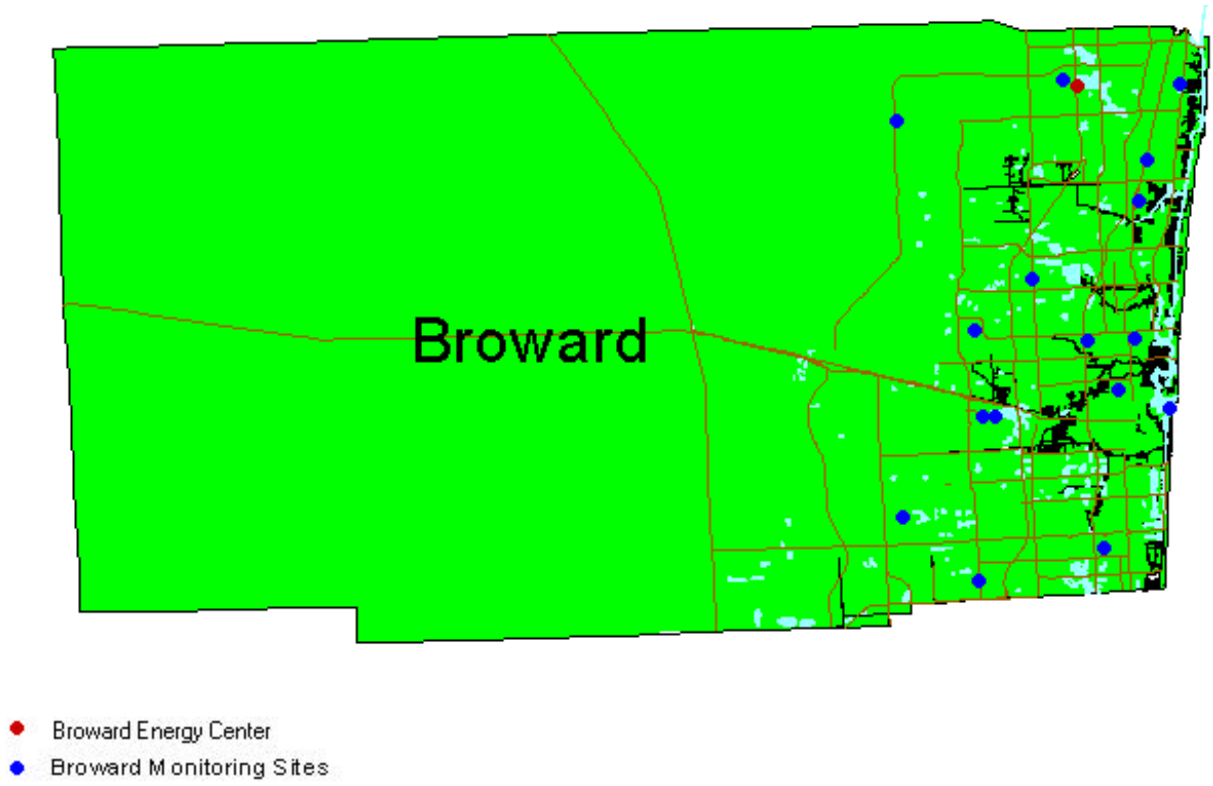

Figure 9 – Broward County Monitoring Network

6.4.5 Ambient Air Quality in Broward County

Measured ambient air quality is given in the following table. The highest measured values are all less than the respective National Ambient Air Quality Standards. The average measurements are all much less than the respective standards.

1999 AMBIENT AIR QUALITY NEAR PROJECT SITE

Pollutant	Site Location			Averaging	Ambient Concentration				
	City	Site no.	UTM	Period	1st High	2nd High	Mean	Standard	Units
PM_{10}	Coconut Creek	011-5005	17-2908.456N-582.089E	24-hour	36	31		150[c]	ug/m^3
				Annual			17	50[b]	ug/m^3
SO_2	Fort Lauderdale	011-0010	17-2890.362N-583.251E	3-hour	102	51		500[a]	ppb
				24-hour	17	15		100[a]	ppb
				Annual			3	20[b]	ppb
NO_2	Coral Springs	011-0031	17-2905.871N-570.365E	Annual			10	53[b]	ppb
CO	Pompano	011-2004	17-2899.870N-587.137E	1-hour	5	4		35[a]	ppm
				8-hour	2	2		9[a]	ppm
Ozone	Pompano	011-2003	17-2907.993N-590.166E	1-hour	0.105	0.103	0.04[d]	0.12[c]	ppm
Lead	Coconut Creek	011-5005	17-2908.456N-582.089E	24-hour	0	0	0	1.5[b]	ug/m^3

a - Not to be exceeded more than once per year.
b - Arithmetic mean.
c - Not to be exceeded on more than an average of one day per year over a three-year period.
d – Mean ozone value reflects the average daily 1-hour maximum reading.

6.5 Air Quality Impact Analysis

6.5.1 Introduction

The proposed project will increase emissions of five pollutants at levels in excess of PSD significant amounts: PM/PM_{10}, CO, NO_X, SO_2, and SAM. PM_{10}, SO_2 and NO_X are criteria pollutants and have national and state ambient air quality standards (AAQS), PSD increments, and significant impact levels defined for them. CO is a criteria pollutant and has only AAQS and significant impact levels defined for it. There are no applicable PSD increments, AAQS or de minimis monitoring levels for SAM; the BACT determination will set the emission limits for SAM.

The applicant's initial PM/PM_{10}, CO, NO_X, and SO_2 air quality impact analyses for this project predicted significant impacts only for PM_{10} in the Class II area in the vicinity of the project. Therefore, no further applicable AAQS and PSD increment impact analyses for were CO, NO_X, and SO_2 were required in the Class II area. The nearest PSD Class I area is the Everglades National Park (ENP) located about 67 km to the south. The applicant's PSD Class I air quality analysis showed no significant impacts. Therefore, a cumulative PSD Class I increment analysis was not required. Also, the maximum predicted impacts for all pollutants were below their respective *de minimis* ambient impact levels. Therefore, pre-construction monitoring at the proposed site was not required for this project. Based on the preceding discussion, the air quality analyses required by the PSD regulations for this project were the following:

- A significant impact analysis for PM_{10}, CO, SO_2, and NO_2 in the surrounding Class II Area;
- An Ambient Air Quality Standards (AAQS) and PSD increment analysis for PM_{10} in the Class II area in the vicinity of the project
- A significant impact analysis for PM_{10}, SO_2, and NO_2 in the ENP;
- An analysis of impacts on soils, vegetation, visibility, and of growth-related air quality modeling impacts.

Based on these required analyses, the Department has reasonable assurance that the proposed project, as described in this report and subject to the conditions of approval proposed herein, will not cause or significantly contribute to a violation of any AAQS or PSD increment. However, the following EPA-directed stack height language is included: "In approving this permit, the Department has determined that the application complies with the applicable provisions of the stack height regulations as revised by EPA on July 8, 1985 (50 FR 27892). Portions of the regulations have been remanded by a panel of the U.S. Court of Appeals for the D.C. Circuit in NRDC v. Thomas, 838 F. 2d 1224 (D.C. Cir. 1988). Consequently, this permit may be subject to modification if and when EPA revises the regulation in response to the court decision. This may result in revised emission limitations or may affect other actions taken by the source owners or operators." A more detailed discussion of the required analyses follows.

6.5.2 Ambient Monitoring Requirements

Preconstruction ambient air quality monitoring is required for all pollutants subject to PSD review unless otherwise exempted or satisfied. The monitoring requirement may be satisfied by using existing representative monitoring data, if available. Substantial monitoring data exist for the area as discussed in the previous sections.

An exemption to the monitoring requirement may be obtained if the maximum air quality impact resulting from the projected emissions increase, as determined by air quality modeling, is less than a pollutant-specific de minimus concentration. The table below shows that predicted impacts from the combustion turbines are substantially less than the respective de minimus levels; therefore, preconstruction ambient air quality monitoring is not required for any pollutant. Additionally, the approximate high values measured at existing ambient monitoring sites in Broward County are included for comparison purposes.

Installation of additional monitors near the proposed site will probably not show any increases from the plant because of the very low impact levels. Basically, the highest contribution from the plant would be on the order of 1 percent or less of the highest measured concentrations. This is less than the inherent measurement error in the sampling and analytical techniques.

MAXIMUM PROJECT AIR QUALITY IMPACTS FOR COMPARISON TO THE DE MINIMIS AMBIENT IMPACT LEVELS

Pollutant	Averaging Time	Max Predicted Impact (ug/m^3)	De Minimis Level (ug/m^3)	Baseline Concentrations (ug/m^3)	Impact Greater Than De Minimis?
PM_{10}	24-hour	6	10	~ 40	NO
NO_2	Annual	0.07	14	~ 10	NO
SO_2	24-hour	0.6	13	~ 45	NO
CO	8-hour	6	575	~ 2500	NO

6.5.3 Models and Meteorological Data Used in the Air Quality Analysis

PSD Class II Area

The EPA-approved Industrial Source Complex Short-Term (ISCST3) dispersion model was used to evaluate the pollutant emissions from the proposed project in the surrounding Class II Area. This model determines ground-level concentrations of inert gases or small particles emitted into the atmosphere by point, area, and volume sources. It incorporates elements for plume rise, transport by the mean wind, Gaussian dispersion, and pollutant removal mechanisms such as deposition. The ISCST3 model allows for the separation of sources, building wake downwash, and various other input and output features. A series of specific model features, recommended by the EPA, are referred to as the regulatory options. The applicant used the EPA recommended regulatory options. Direction-specific downwash parameters were used for all sources for which downwash was considered. The stacks associated with this project all satisfied the good engineering practice (GEP) stack height criteria.

Meteorological data used in the ISCST3 model consisted of a concurrent 5-year period of hourly surface weather observations and twice-daily upper air soundings from the National Weather Service (NWS) station at West Palm Beach, Florida (surface and upper air data). The 5-year period of meteorological data was from 1987 through 1991. This NWS station was selected for use in the study because it is the closest primary weather station to the study area and is most representative of the project site. The surface observations included wind direction, wind speed, temperature, cloud cover, and cloud ceiling.

PSD Class I Area

Since the PSD Class I ENP is greater than 50 km from the proposed facility, long-range transport modeling was required for the Class I impact assessment. The California Puff (CALPUFF) dispersion model was used to evaluate the potential impact of the proposed pollutant emissions on the PSD Class I increments and two Air Quality Related Values (AQRVs), regional haze and deposition of sulfur and nitrogen compounds. CALPUFF is a non-steady state, Lagrangian, long-range transport model that incorporates Gaussian puff dispersion algorithms. This model determines ground-level concentrations of inert gases or small particles emitted into the atmosphere by point, line, area, and volume sources. The CALPUFF model has the capability to treat time-varying

sources. It is also suitable for modeling domains from tens of meters to hundreds of kilometers, and has mechanisms to handle rough or complex terrain situations. Finally, the CALPUFF model is applicable for inert pollutants as well as pollutants that are subject to linear removal and chemical conversion mechanisms.

CALPUFF was first run in screen mode using ISCST3 meteorological input data. Five years of regionally representative data were used as input. The source of the surface data was the Solar and Meteorological Surface Observation Network (SAMSON) data set that has been produced by the National Climatic Data Center (NCDC). Hourly SAMSON surface data for West Palm Beach International Airport supplemented with precipitation data obtained from NCDC for the period 1987 through 1991 was used along with concurrent upper air data from West Palm Beach.

6.5.4 Significant Impact Analysis

In order to conduct a significant impact analysis, the applicant uses the proposed project's emissions at worst load conditions as inputs to the models. The highest predicted short-term concentrations and highest predicted annual averages predicted by this modeling are compared to the appropriate significant impact levels for the Class I and Class II Areas. If this modeling at worst load conditions shows significant impacts, additional modeling which includes the emissions from surrounding facilities is required to determine the project's impacts on the existing air quality and any applicable AAQS or PSD increments. If no significant impacts are shown, the applicant is exempted from doing any further modeling.

For the Class II analysis a combination of fence line, near-field and far-field receptors were chosen for predicting maximum concentrations in the vicinity of the project. The fence line receptors consisted of discrete Cartesian receptors spaced at 50 meter intervals around the facility fence line. The remaining receptor grid consisted of densely spaced Cartesian receptors at 100 meters apart starting at and extending to 1 kilometer at 100 meter spacing from the fence line. Beyond 1 kilometer, polar receptor rings (with 36 receptors per ring at 10 degree intervals) with a spacing of 100 meters were used out to 2 kilometers from the facility. From 2 to 4 kilometers, polar receptor rings with a spacing of 250 meters were used. Between 4 and 10 kilometers, polar receptor rings with a spacing of 500 meters were used.

For the Class I screening analysis two rings of receptors were centered on the facility at distances bracketing the ENP. These distances represent the nearest boundary and the farthest boundary of the ENP with respect to the proposed project. Receptors were placed at two-degree intervals over a 360-degree arc along each ring. Screening model runs showed insignificant impacts for all pollutants.

The tables below show the results of the significant impact modeling for the Class II and Class I areas:

MAXIMUM PROJECT AIR QUALITY IMPACTS FROM THE EL PASO PROJECT FOR COMPARISON TO THE PSD CLASS II SIGNIFICANT IMPACT LEVELS

Pollutant	Averaging Time	Max Predicted Impact (ug/m^3)	Significant Impact Level (ug/m^3)	Significant Impact?
SO_2	Annual	0.02	1	NO
	24-Hour	0.6	5	NO
	3-Hour	1.7	25	NO
PM_{10}	Annual	0.2	1	NO
	24-Hour	6	5	YES
CO	8-Hour	6	500	NO
	1-Hour	23	2000	NO
NO_2	Annual	0.07	1	NO

The results of the significant impact modeling show that there are significant impacts for the PM_{10} 24-hour averaging time predicted due to the emissions from this project in the vicinity of the facility; therefore, further modeling was required in the Class II area.

MAXIMUM PROJECT AIR QUALITY IMPACTS FROM THE EL PASO PROJECT COMPARED WITH PSD CLASS I SIGNIFICANT IMPACT LEVELS (ENP)

Pollutant	Averaging Time	Max. Predicted Impact at Class I Area (ug/m^3)	Class I Significant Impact Level (ug/m^3)	Significant Impact?
PM_{10}	Annual	0.01	0.2	NO
	24-hour	0.12	0.3	NO
NO_2	Annual	0.02	0.1	NO
SO_2	Annual	0.004	0.1	NO
	24-hour	0.05	0.2	NO
	3-hour	0.13	1	NO

The results of the significant impact modeling for the ENP show that there are no significant impacts predicted due to SO_2, NO_2, and PM_{10} emissions from these projects; therefore, no further modeling was required in the Class I area for these pollutants.

6.5.5 Broward County Analysis

The Broward County Code Section 27-175 and 27-176(c)(2)b prohibit major sources from allowing emissions of criteria pollutants in quantities that would reduce by more than one half the margin between the existing ambient concentrations and the applicable NAAQS. The Broward County Department of Planning and Environmental Protection (DPEP) provided 1999 ambient monitoring data to the applicant from sites throughout the County. These data were derived from eight monitoring sites for PM_{10}, one for SO_2, one for NO_2 and five for CO. The results were submitted by the applicant to DPEP for review and are tabulated below.

EL PASO BEC COMPLIANCE DEMONSTRATION FOR BROWARD COUNTY CODE SECTION 27.176(C)(2)(B)

Pollutant	Averaging Time	Baseline Concentration (ug/m^3)	Monitoring Site Number	NAAQS (ug/m^3)	½ [NAAQS-Baseline] (ug/m^3)	Maximum Predicted Impact Of Facility
SO_2	Annual	8	011-0010	80	36	0.02
	24-Hour	45	011-0010	365	160	0.6
	3-Hour	267	011-0010	1300	517	1.7
PM_{10}	Annual	17	011-5005	50	16	0.2
	24-Hour	36	011-5005	150	57	6
CO	8-Hour	2,320	011-2004	10,000	3,840	6
	1-Hour	5,800	011-2004	40,000	17,100	23
NO_2	Annual	10	011-0031	100	45	0.07

The table above shows that this project will consume much less than one-half of the margin between the maximum baseline concentration and the NAAQS. The project's impact is less than one percent of this margin for all the criteria pollutants modeled.

6.5.6 AAQS Analysis

For pollutants subject to an AAQS review, the total impact on ambient air quality is obtained by adding a "background" concentration to the maximum modeled concentration. This "background" concentration takes into account all sources of a particular pollutant that are not explicitly modeled. The results of the AAQS analysis are summarized in the table below. As shown in this table, emissions from the proposed facility are not expected to cause or contribute to a violation of an AAQS.

AMBIENT AIR QUALITY IMPACTS

Pollutant	Averaging Time	Major Sources Impact (ug/m^3)	Background Conc. (ug/m^3)	Total Impact (ug/m^3)	Total Impact Greater Than AAQS?	Florida AAQS (ug/m^3)
PM_{10}	24-hour	23	71	94	NO	150

6.5.7 PSD Class Increment Analysis for PM_{10}

The PSD increment represents the amount that new sources in an area may increase ambient ground level concentrations of a pollutant from a baseline concentration, which was established in 1977 for PM_{10} (the baseline year was 1975 for existing major sources of PM_{10}). The maximum predicted 24- hour PM_{10} PSD Class II area impacts from this project and all other increment-consuming sources in the vicinity of the BEC are shown in the following table. The table shows that the maximum predicted impacts are less than the allowable Class II PM_{10} increments.

PSD CLASS II INCREMENT ANALYSIS

Pollutant	Averaging Time	Maximum Predicted Impact (µg/m^3)	Impact Greater Than Allowable Increment?	Allowable Increment (µg/m^3)
PM_{10}	24-hr	23	NO	30

6.5.8 Additional Impacts Analysis

Impact on Soils, Vegetation, And Wildlife

Very low emissions are expected from these natural gas-fueled combustion turbines in comparison with conventional power plants generating equal power. Emissions of acid rain and ozone precursors will be very low The maximum ground-level concentrations predicted to occur for PM_{10}, CO, NO_X, and SO_2 as a result of the proposed project, including background concentrations and all other nearby sources, will be considerably less than the respective AAQS. The project impacts are just slightly greater for PM_{10} and less than the significant impact levels for all other pollutants. These values in-turn are less than the respective applicable allowable increments.

The total emissions of NO_X will be about 1.5 tons per day compared with nearly 200 tons per day from all sources in the County. SO_2 emissions will be roughly ¼ of a ton per day compared with countywide emissions of roughly 600 tons per day. The contribution to the total load of these pollutants into the air is very small and will not affect soils in any appreciable manner.

The concentrations of key pollutants are substantially less than values known to cause damage to vegetation. For example, lichens are known to be more sensitive to SO_2 than higher order leafy plants. Injury has been documented at exposures of 88 ug/m^3 according to the application. The average long-term and maximum short-term SO_2 concentrations caused by the proposed project are several orders of magnitude less (0.08 – 1.74 ug/m^3). It is also noted that, at the site of the only SO_2

station in the county, the annual average and 24-hour concentrations of SO_2 are 8 and 45 ug/m^3 respectively. Therefore, the contribution from the proposed project would be minimal.

Similar analyses apply to the other pollutants and their impacts on soil, vegetation and wildlife. The Department's conclusion is that the effects of the project on soils, vegetation, and wildlife will be minimal or insignificant.

Impact On Visibility and Regional Haze

Natural gas is a clean fuel and produces little ash. This will minimize smoke formation. The low NO_X and SO_2 emissions will also minimize plume visibility (typically zero percent opacity). The contribution to smog in the area will be minimal. The applicant submitted a regional haze analysis for the Everglades National Park. Based on NPS criteria, no adverse impacts were predicted.

Growth-Related Air Quality Impacts

There will be short-term increases in the labor force to construct the project. These temporary increases will not result in significant commercial and residential growth in the vicinity of the project. When operational, the project will generate approximately 25 jobs at the site.

The type of project proposed has a small overall physical "footprint," and the lowest air emissions per unit of electric power generating capacity for both combined cycle and simple cycle (intermittent) duty.

Hazardous Air Pollutants

The project is not a major source of hazardous air pollutants (HAPs) and is not subject to any specific industry or HAP control requirements pursuant to Section 112 of the Clean Air Act.

7. CONCLUSION

Based on the foregoing technical evaluation of the application and additional information submitted by the applicant, the Department has made a preliminary determination that the proposed project will comply with all applicable state and federal air pollution regulations. In making this preliminary determination, the Department also drafted a determination of Best Available Control Technology that may be modified based on comments from the applicant, agencies, and the public.

A. A. Linero, P.E.
Debbie Galbraith, Meteorologist