```
 _perMits_|__Events_|__Payment_|__Facility_|__partY_|__Reports_|__Help_|__eXit_
--------------------------  _Permitting_Application_  --------------------------
+------------------------------- ARMS Facility -------------------------------+
| Facility Name: GULF_COAST_CREMATORY_SER_____________  AIRS ID: 0050029      |
| County: BAY_________              Owner: GULF_COAST_CREMATORY_SER____________|
| Office: NW_Br:_PANAMA_CITY__________        Category: POINT                  |
+---------------------------------- Project ----------------------------------+
|AIR Permit #: _______-___-___       Project #: 001  CRA Reference #: 60642____|
| Permit Office: NWD_(DISTRICT)_____________________    Agency Action: Pending___
| Project Name: GULF_COAST_CREMATORY_SER_____ Desc: Gulf_Coast_Crematory_new_c
| Type/Sub/Req: AC__/1F_ Source_less_than_5_tpy_$250_______ Logged: 27-JAN-2000
|     Received: 26-JAN-2000_ Issued: ____________ Expires: ____________ OGC: _
|Fee: ____250.00 Fee Recd: ____250.00 Dele: _________ Override: NONE__________|
+----------------------------- Related Party ------------------------------+
|Role: APPLICANT_______    Begin: 27-JAN-2000   End: ____________
|Name: HICKS,_LAINA_____________________ Company: KENT_FOREST_LAWN_CEMETARY_AND_F
|Addr: 2403_HARRISON_AVE_____________________________________________________
|City: PANAMA_CITY_________________  State: FL Zip: 32405-____ Country: _______
|Phone: 850-769-3396   Fax: ___________
+---------------------------------- Processors ---------------------------------+
|Processor: MANCARELLA_O___________ Y Active: 27-JAN-2000 Inactive: ___________|
+-------------------------------------------------------------------------------+
Enter_Project_Name._____________________________________________________________
Count: *0                                                              <Replace>
```

GULF COAST CREMATORY

New IEE-PPII - Human Cremation Unit

FDEP Construction Permit Application

January - 2000

RECEIVED

JAN 2 6 2000

NORTHWEST FLORIDA
DEP

Department of Environmental Protection

Division of Air Resources Management

APPLICATION FOR AIR PERMIT - NON-TITLE V SOURCE

See Instructions for Form No. 62-210.900(3)

I. APPLICATION INFORMATION

Identification of Facility

1. Facility Owner/Company Name: **Gulf Coast Crematory**	
2. Site Name: **Gulf Coast Crematory**	
3. Facility Identification Number: [X] Unknown	
4. Facility Location: Street Address or Other Locator: **2403 Harrison Avenue** City: **Panama City** County: **Bay** Zip Code: **32405**	
5. Relocatable Facility? [ ] Yes [X] No	6. Existing Permitted Facility? [ ] Yes [X] No

New incinerator is being installed at this address.

Application Contact

1. Name and Title of Application Contact: **Mr. Bernard A. Ball, Jr., Director of Environmental Services**
2. Application Contact Mailing Address: Organization/Firm: **Central Florida Testing Laboratories, Inc.** Street Address: **12625 - 40th Street North** City: **Clearwater** State: **FL** Zip Code: **33762**
3. Application Contact Telephone Numbers: Telephone: **(727) 572-9797** Fax: **(727) 299-0023**

Application Processing Information (DEP Use)

1. Date of Receipt of Application:	
2. Permit Number:	

RECEIVED
JAN 26 2000
NORTHWEST FLORIDA
DEP

Owner/Authorized Representative

1.	Name and Title of Owner/Authorized Representative: **Ms. Laina Hicks, General Manager**
2.	Owner/Authorized Representative Mailing Address: Organization/Firm: **Kent Forest Lawn Cemetery and Funeral Home** Street Address: **2403 Harrison Avenue** City: **Panama City** State: **Florida** Zip Code: **32405**
3.	Owner/Authorized Representative Telephone Numbers: Telephone: **(850) 769-3396** Fax: **NA**
4.	Owner/Authorized Representative Statement: *I, the undersigned, am the owner or authorized representative* of the facility addressed in this application. I hereby certify, based on information and belief formed after reasonable inquiry, that the statements made in this application are true, accurate and complete and that, to the best of my knowledge, any estimates of emissions reported in this application are based upon reasonable techniques for calculating emissions. The air pollutant emissions units and air pollution control equipment described in this application will be operated and maintained so as to comply with all applicable standards for control of air pollutant emissions found in the statutes of the State of Florida and rules of the Department of Environmental Protection and revisions thereof. I understand that a permit, if granted by the Department, cannot be transferred without authorization from the Department, and I will promptly notify the Department upon sale or legal transfer of any permitted emissions unit.* Laina L. Hicks — Signature Jan. 24, 2000 — Date

* Attach letter of authorization if not currently on file.

Professional Engineer Certification

1.	Professional Engineer Name: **George C. Sinn, Jr., P.E.** Registration Number: **16911**
2.	Professional Engineer Mailing Address: Organization/Firm: **Central Florida Testing Laboratories, Inc.** Street Address: **12625 - 40th Street North** City: **Clearwater** State: **Florida** Zip Code: **33762**
3.	Professional Engineer Telephone Numbers: Telephone: **(727) 572-9797** Fax: **(727) 299-0023**

Scope of Application

Emissions Unit ID	Description of Emissions Unit	Permit Type	Processing Fee
001	Industrial Equipment & Engineering Company, Inc., Model IE43-PPII Cremation Incinerator fired on either LP Gas or Natural Gas.	AC1F	$250.00

Application Processing Fee

Check one: [**X**] Attached - Amount: $ **250.00** [ ] Not Applicable

II. FACILITY INFORMATION

A. GENERAL FACILITY INFORMATION

Facility Location and Type

1. Facility UTM Coordinates: Zone: **16** East (km): **629.03** North (km): **3341.10**			
2. Facility Latitude/Longitude: Latitude (DD/MM/SS): **30°11'47" N** Longitude (DD/MM/SS): **85°39'35" W**			
3. Governmental Facility Code: **0**	4. Facility Status Code: **A**	5. Facility Major Group SIC Code: **72**	6. Facility SIC(s): **7261**
7. Facility Comment (limit to 500 characters): **This project consists of the construction of a new Industrial Equipment & Engineering Company Model IE43-PPII cremation incinerator at Gulf Coast Crematory in Panama City, Bay County, Florida. This facility will comply with all applicable rules and regulations.**			

Facility Contact

1. Name and Title of Facility Contact: **Ms. Laina Hicks, General Manager**
2. Facility Contact Mailing Address: Organization/Firm: **Kent Lawn Cemetery and Funeral Home** Street Address: **2403 Harrison Avenue** City: **Panama City** State: **Florida** Zip Code: **32405**
3. Facility Contact Telephone Numbers: Telephone: **(850) 769-3396** Fax: **NA**

B. FACILITY POLLUTANTS

List of Pollutants Emitted

1. Pollutant Emitted	2. Pollutant Classif.	3. Requested Emissions Cap		4. Basis for Emissions Cap	5. Pollutant Comment
		lb/hour	tons/year		
PM	**B**	**0.08 gr/dscf**		**RULE**	**Concentration Limit Only**
CO	**B**	**100 ppm @ 7% O_2**		**RULE**	**Concentration Limit Only**
SO2	**B**				**Not limited by Rule**
NOX	**B**				**Not limited by Rule**
TOC	**B**				**Not limited by Rule**

III. EMISSIONS UNIT INFORMATION

A separate Emissions Unit Information Section (including subsections A through G as required) must be completed for each emissions unit addressed in this Application for Air Permit. If submitting the application form in hard copy, indicate, in the space provided at the top of each page, the number of this Emissions Unit Information Section and the total number of Emissions Unit Information Sections submitted as part of this application.

A. GENERAL EMISSIONS UNIT INFORMATION

Emissions Unit Description and Status

1. Type of Emissions Unit Addressed in This Section: (Check one)

[X] This Emissions Unit Information Section addresses, as a single emissions unit, a single process or production unit, or activity, which produces one or more air pollutants and which has at least one definable emission point (stack or vent).

[ ] This Emissions Unit Information Section addresses, as a single emissions unit, a group of process or production units and activities which has at least one definable emission point (stack or vent) but may also produce fugitive emissions.

[ ] This Emissions Unit Information Section addresses, as a single emissions unit, one or more process or production units and activities which produce fugitive emissions only.

2. Description of Emissions Unit Addressed in This Section (limit to 60 characters):
Industrial Equipment & Engineering Company, Model IE43-PPII Human Crematory

3. Emissions Unit Identification Number: ID: **001**		[ ] No ID [ ] ID Unknown
4. Emissions Unit Status Code: **C**	5. Initial Startup Date: **ASAP**	6. Emissions Unit Major Group SIC Code: **72**

6. Emissions Unit Comment: (Limit to 500 Characters)

This project consists of the construction of a new Industrial Equipment & Engineering Company Model IE43-PPII cremation incinerator at Gulf Coast Crematory in Panama City, Bay County, Florida. This facility will comply with all applicable rules and regulations.

Emissions Unit Information Section 1 of 1 .

B. EMISSION POINT (STACK/VENT) INFORMATION

Emission Point Description and Type

1. Identification of Point on Plot Plan or Flow Diagram? **IE43-PPII Crematory**	2. Emission Point Type Code: **1**

3. Descriptions of Emission Points Comprising this Emissions Unit for VE Tracking (limit to 100 characters per point):
The emission point for this emissions unit consists of a 20 inch diameter stack through the roof of the crematory building.

4. ID Numbers or Descriptions of Emission Units with this Emission Point in Common:

5. Discharge Type Code: **V**	6. Stack Height: **~16** feet	7. Exit Diameter: **20 inches or 1.67 ft.**
8. Exit Temperature: **~1139.8** °F	9. Actual Volumetric Flow Rate: **~2032** acfm	10. Water Vapor: **~12.6** %

11. Maximum Dry Standard Flow Rate: **~592** dscfm *(average)*	12. Nonstack Emission Point Height: feet

13. Emission Point UTM Coordinates:

Zone: **16** East (km): **629.03** North (km): **3341.10**

14. Emission Point Comment (limit to 200 characters):

****** The emission point flow and temperature conditions are based on the most recent stack test results on an identical unit. A copy of that test report is attached for reference.***

Emissions Unit Information Section 1 of 1 .

Pollutant Detail Information Page 1 of 5 .

D. EMISSIONS UNIT POLLUTANT DETAIL INFORMATION

Potential Emissions

1. Pollutant Emitted: **PM**		2. Pollutant Regulatory Code: **EL**
3. Primary Control Device Code: **021**	4. Secondary Control Device Code:	5. Total Percent Efficiency of Control:
6. Potential Emissions: ***(based on average dscfm)*** **0.41** lb/hour **1.78** tons/year		7. Synthetically Limited? [ ]
8. Emission Factor: **0.08 grains/dscfm** Reference: **RULE 62-296.401(5)(a), F.A.C.**		9. Emissions Method Code: **0**

10. Calculation of Emissions (limit to 600 characters):

$$E_{pm} = ((0.08 \text{ grains/dscf})(592 \text{ dscfm})(60 \text{ min/hr}))/(7000 \text{ grains/pound})$$

$$E_{pm} = 0.41 \text{ lb/hr (or 1.78 ton/yr)}$$

10. Pollutant Potential Emissions Comment (limit to 200 characters):
Potential emissions based on maximum allowable emission rate of 0.08 grains/dscf, and an average flow rate from the attached stack test of 592 dscfm. The ONLY emission limitation for particulate matter in the permit should be the concentration limit of 0.08 grains/dscf at 7% Oxygen. The hourly and yearly mass emission rates are included for reference only.

Allowable Emissions Allowable Emissions 1 of 1 .

1. Basis for Allowable Emissions Code: **RULE 62-296.401(5)(a)**	2. Future Effective Date of Allowable Emissions:
2. Requested Allowable Emissions and Units: **0.08 grains/dscf @ 7% O_2**	4. Equivalent Allowable Emissions: **0.41** lb/hour **1.78** tons/year

5. Method of Compliance (limit to 60 characters):
Compliance is demonstrated by the submission of an EPA method 5 stack test report from an identical cremation incinerator.

6. Allowable Emissions Comment (Desc. of Operating Method) (limit to 200 characters):
The ONLY emission limitation for particulate matter in the permit should be the concentration limit of 0.08 grains/dscf at 7% Oxygen. The hourly and yearly mass emission rates are included for reference only.

Emissions Unit Information Section 1 of 1 .

Pollutant Detail Information Page 3 of 5 .

D. EMISSIONS UNIT POLLUTANT DETAIL INFORMATION

Potential Emissions

1. Pollutant Emitted: **NOX**		2. Pollutant Regulatory Code: **NS**
3. Primary Control Device Code: **NA**	4. Secondary Control Device Code:	5. Total Percent Efficiency of Control:
6. Potential Emissions: ***(based on gas consumption)*** **0.17** lb/hour **0.74** tons/year		7. Synthetically Limited? [ ]
8. Emission Factor: **100 lb/1,000,000 ft^3** Reference: **Table 1.4-2 AP-42 Fifth Edition**		13. Emissions Method Code: **4**

10. Calculation of Emissions (limit to 600 characters):

$$E_{NOx} = (100 \text{ lb.}/10^6 \text{ ft}^3)(\sim 0.0017\ 10^6 \text{ ft}^3/\text{hr}) = 0.17 \text{ lb/hr}$$

$$E_{NOx} = [(0.17 \text{ lb/hr}) * (8760 \text{ hrs./year})] / (2000 \text{ lb/ton}) = 0.74 \text{ ton/yr}$$

14. Pollutant Potential Emissions Comment (limit to 200 characters):
Potential emissions of the oxides of nitrogen are below the threshold amount, and should not be limited in the permit for this crematory.

Allowable Emissions Allowable Emissions 1 of 1 .

5. Basis for Allowable Emissions Code:	2. Future Effective Date of Allowable Emissions:
6. Requested Allowable Emissions and Units:	4. Equivalent Allowable Emissions: lb/hour tons/year

5. Method of Compliance (limit to 60 characters):

6. Allowable Emissions Comment (Desc. of Operating Method) (limit to 200 characters):

Emissions Unit Information Section 1 of 1 .

Pollutant Detail Information Page 5 of 5 .

D. EMISSIONS UNIT POLLUTANT DETAIL INFORMATION

Potential Emissions

1. Pollutant Emitted: **TOC**		2. Pollutant Regulatory Code: **NS**
3. Primary Control Device Code: **NA**	4. Secondary Control Device Code:	5. Total Percent Efficiency of Control:
6. Potential Emissions: ***(based on gas consumption)*** **0.014** lb/hour **0.06** tons/year		7. Synthetically Limited? [ ]
8. Emission Factor: **8.0 lb/1,000,000 ft^3** Reference: **Table 1.4-3 AP-42 Fifth Edition**		17. Emissions Method Code: **4**

10. Calculation of Emissions (limit to 600 characters):

$$E_{TOC} = (8.0\ lb./10^6\ ft^3)(\sim 0.0017\ 10^6\ ft^3/hr) = 0.014\ lb/hr$$

$$E_{TOC} = [(0.014\ lb/hr) * (8760\ hrs./year)] / (2000\ lb/ton) = 0.06\ ton/yr$$

18. Pollutant Potential Emissions Comment (limit to 200 characters):
Potential emissions of TOC are below the threshold amount, and should not be limited in the permit for this crematory.

Allowable Emissions Allowable Emissions 1 of 1 .

9. Basis for Allowable Emissions Code:	2. Future Effective Date of Allowable Emissions:
10. Requested Allowable Emissions and Units:	4. Equivalent Allowable Emissions: lb/hour tons/year
5. Method of Compliance (limit to 60 characters):	
6. Allowable Emissions Comment (Desc. of Operating Method) (limit to 200 characters):	

G. EMISSIONS UNIT SUPPLEMENTAL INFORMATION

Supplemental Requirements

1. Process Flow Diagram [X] Attached, Document ID: III [ ] Not Applicable [ ] Waiver Requested
2. Fuel Analysis or Specification [ ] Attached, Document ID:_____ [X] Not Applicable [ ] Waiver Requested
3. Detailed Description of Control Equipment [X] Attached, Document ID: IV [ ] Not Applicable [ ] Waiver Requested
4. Description of Stack Sampling Facilities [ ] Attached, Document ID:_____ [X] Not Applicable [ ] Waiver Requested
5. Compliance Test Report [X] Attached, Document ID:_____ [ ] Previously submitted, Date:_____ [ ] Not Applicable
6. Procedures for Startup and Shutdown [ ] Attached, Document ID:_____ [X] Not Applicable [ ] Waiver Requested
7. Operation and Maintenance Plan [ ] Attached, Document ID:_____ [X] Not Applicable [ ] Waiver Requested
8. Supplemental Information for Construction Permit Application [X] Attached, Document ID:_____ [ ] Not Applicable
9. Other Information Required by Rule or Statute [ ] Attached, Document ID:_____ [X] Not Applicable
10. Supplemental Requirements Comment:

TABLE OF CONTENTS

I. AREA MAP

II. FACILITY PLOT PLAN

III. PROCESS FLOW DIAGRAM

IV. SUPPLEMENTAL INFORMATION

I. AREA MAP

GULF COAST CREMATORY

NEW IEE - POWER PAK II Human Creamtion Unit

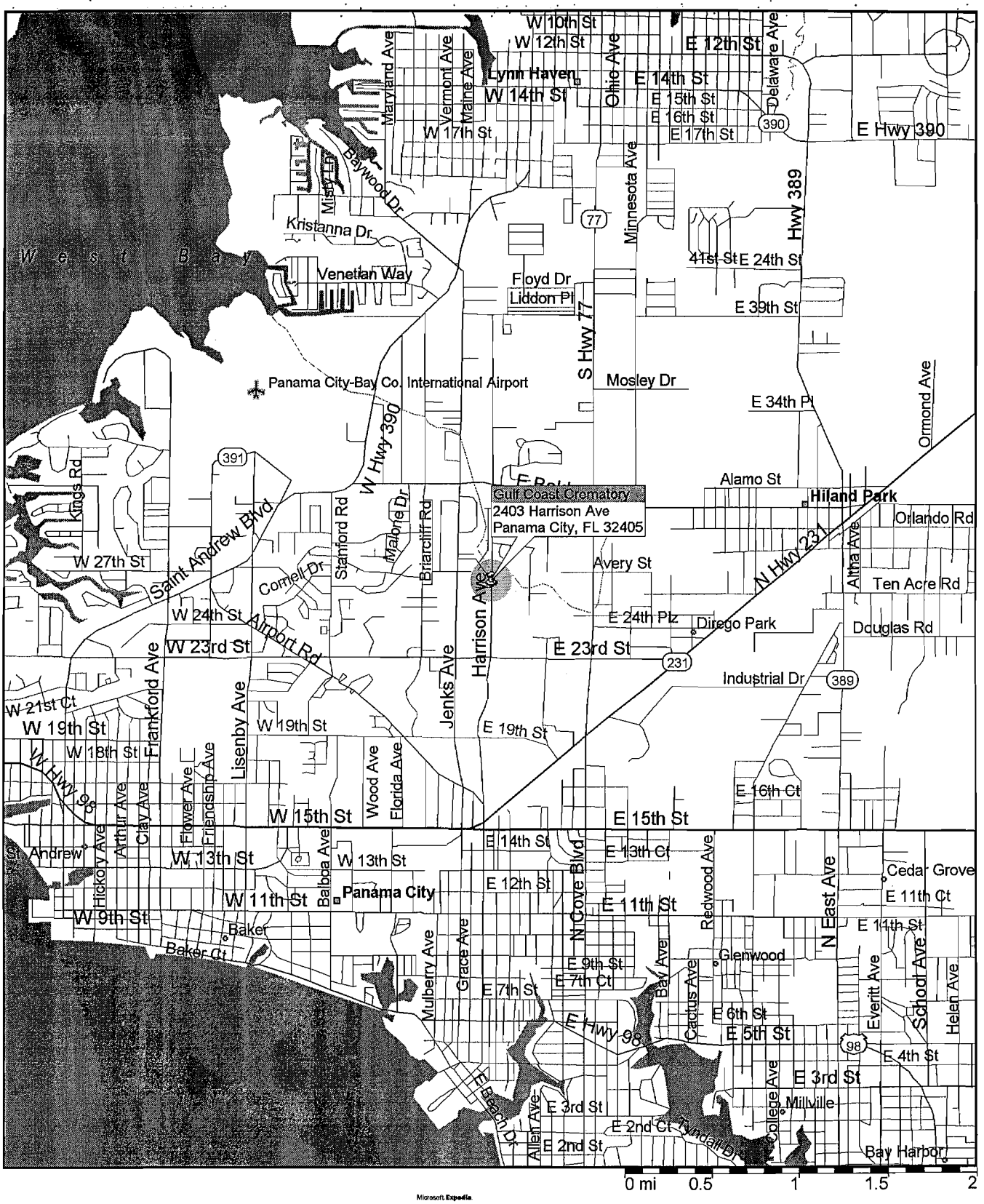

Microsoft Expedia
Streets98

Copyright © 1988-1997, Microsoft Corporation and/or its suppliers. All rights reserved. Please visit our web site at http://maps.expedia.com.

II. FACILITY PLOT PLAN

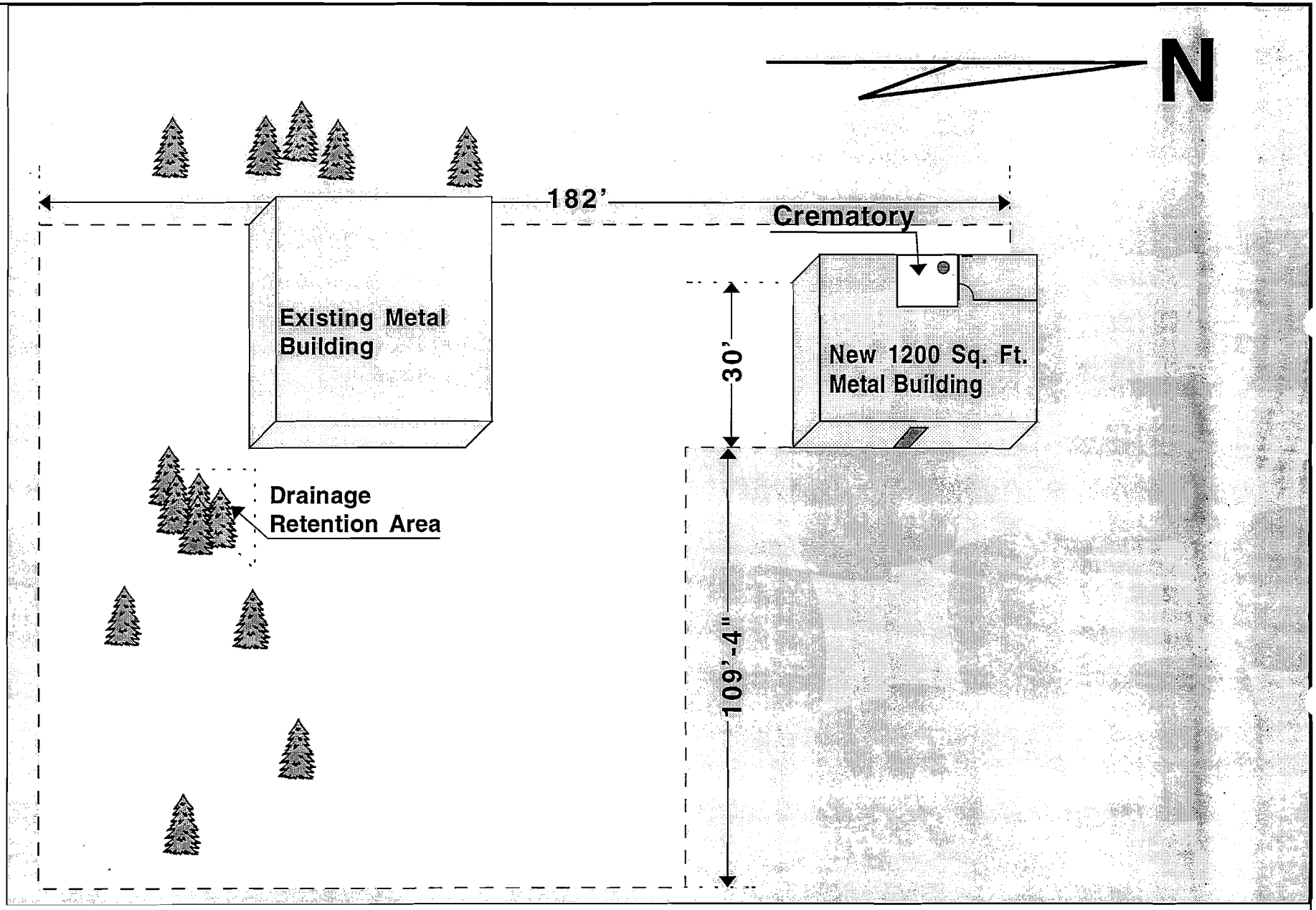

Central Florida Testing Laboratories
12625-40th Street North
Clearwater, Fl. 33762

SCALE: NTS	APPROVED BY:	DRAWN BY: C.L.B.
DATE: 1-10-2000		REVISED:

Gulf Coast Crematory
2403 Harrison Avenue - Panama City, Fl.

PLANT LAYOUT

III. PROCESS FLOW DIAGRAM

PROCESS FLOW DIAGRAM
CREMATOR

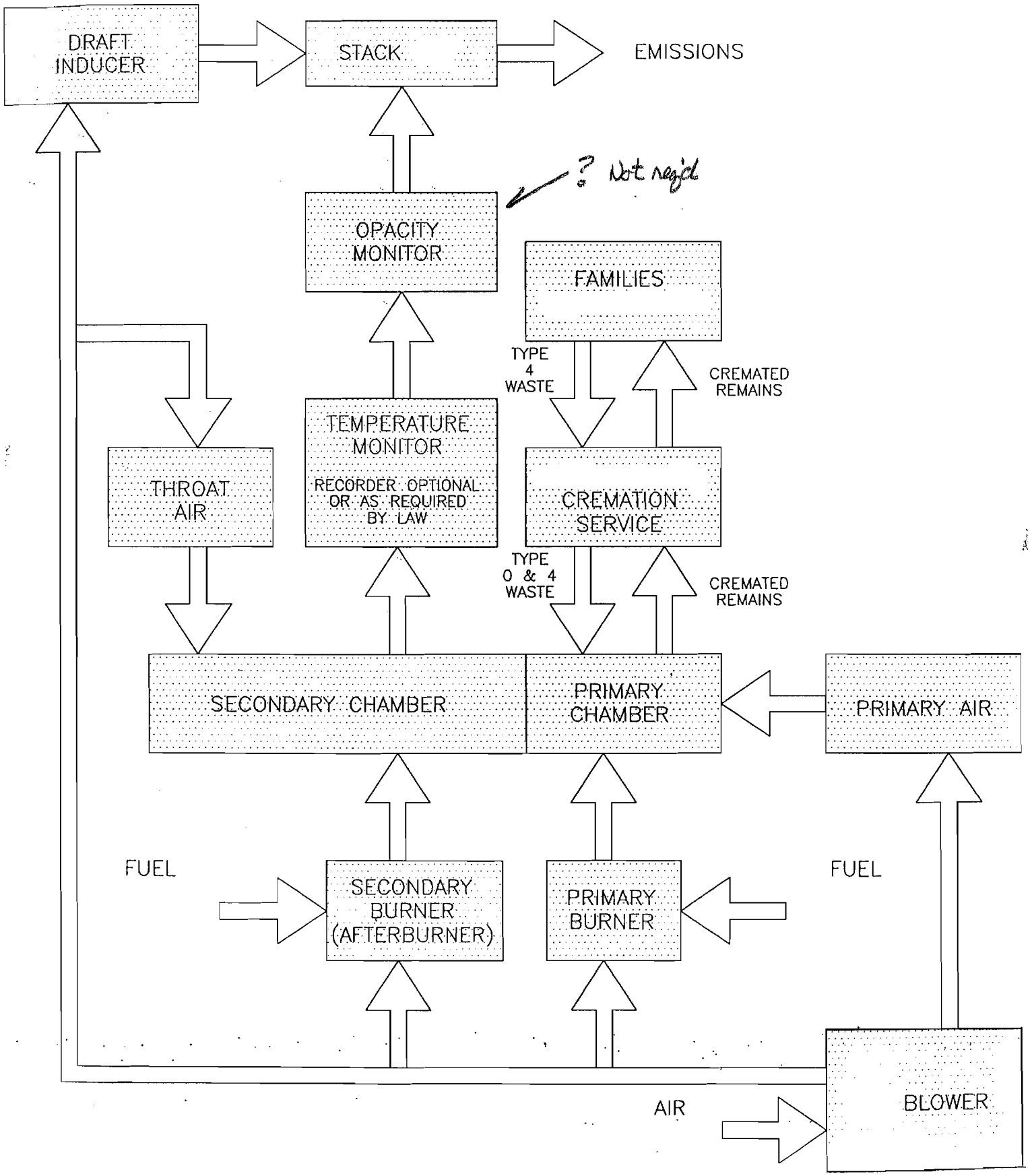

IV. SUPPLEMENTAL INFORMATION

CREMATOR MASS BALANCE

Industrial Equipment & Engineering Company
Model IE43-PPII Cremation Incinerator, Fired on Natural Gas

1800

THESE CALCULATIONS HAVE BEEN PREPARED TO EVALUATE THE COMBUSTION PROCESS IN THE MODEL IE43-PPII (POWER-PAK II) CREMATORY INCINERATOR AT A WORST CASE CONDITION WITH RESPECT TO RETENTION TIME.

THE INCINERATOR INSTITUTE OF AMERICA HAS PUBLISHED THE FOLLOWING SPECIFICATIONS COVERING AVERAGE WASTES.

WASTE TYPE	TYPE 0 (waste container)	TYPE 4 (body)
BTU PER POUND	8500	1000
POUND ASH PER POUND WASTE	0.05	0.05
POUND MOISTURE PER POUND WASTE	0.1	0.85
POUND COMBUSTIBLES PER POUND WASTE	0.85	0.1
HOURLY CONSUMPTION OF WASTE (LBS)	20	80

1. MASS OF PRODUCTS OF COMBUSTION FROM CONTAINER

A. COMBUSTION AIR

$$\frac{8500 \text{ BTU/LB}}{100 \text{ BTU/CF OF AIR*}} \times 0.075 \text{ LB/CF OF AIR} \qquad 6.38 \text{ LB/LB BURNED}$$

B. COMBUSTIBLES AND WATER VAPOR — FROM CHART ABOVE — 0.95 LB/LB BURNED

C. TOTAL FLUE PRODUCT MASS PER LB BURNED — 7.33 LB/LB BURNED

2. MASS OF PRODUCTS OF COMBUSTION FROM BODY

A. COMBUSTION AIR

$$\frac{1000 \text{ BTU/LB}}{100 \text{ BTU/CF OF AIR*}} \times 0.075 \text{ LB/CF OF AIR} \qquad 0.75 \text{ LB/LB BURNED}$$

B. COMBUSTIBLES AND WATER VAPOR — FROM CHART ABOVE — 0.95 LB/LB BURNED

C. TOTAL FLUE PRODUCT MASS PER LB BURNED — 1.70 LB/LB BURNED

SPECIFICATIONS		
PRIMARY BURNER FUEL CONSUMPTION (MMBTU/HR)	0.5	
SECONDARY BURNER FUEL CONSUMPTION (MMBTU/HR)	1.2	
ADDITIONAL SECONDARY AIR SUPPLIED (CFM)	200	
SEC. CHAMBER TEMPERATURE (°F)	1800	<= = = ACTUAL
SECONDARY CHAMBER VOLUME (CU. FT)	70.7	OPERATING TEMP.
SEC. CHAMB. CROSS-SECTIONAL AREA (SQ. FT)	2.44	IS 1600°F MINIMUM
FLAME PORT AREA (SQ. FT)	2.95	
MIXING BAFFLES AREA (SQ. FT)	1.36	

*AIR AT STANDARD CONDITIONS

3. TOTAL FLUE PRODUCTS

A. MAXIMUM PRIMARY BURNER NATURAL GAS USAGE

500,000 BTU/HR x $\frac{0.045 \text{ LBS/CF}}{1000 \text{ BTU/CF}}$ 22.5 LBS/HR

B. COMBUSTION AIR FOR PRIMARY BURNER

$\frac{500000 \text{ BTU/HR}}{100 \text{ BTU/CF AIR}}$ x x 0.075 LB/CF AIR 375 LBS/HR

C. MAXIMUM SECONDARY BURNER NATURAL GAS USAGE

1,200,000 BTU/HR x $\frac{0.045 \text{ LBS/CF}}{1000 \text{ BTU/CF}}$ 54 LBS/HOUR

D. COMBUSTION AIR FOR SECONDARY BURNER

$\frac{1200000 \text{ BTU/HR}}{100 \text{ BTU/CF AIR}}$ x 1.75 (75% E.A.) x 0.075 LB/CF AIR 1575 LBS/HOUR

E. PRODUCTS FROM TYPE 0 WASTE (CONTAINER)

7.33 LBS/LB BURNED x 20 LB/HR BURN RATE 147 LBS/HOUR

F. PRODUCTS FROM TYPE 4 WASTE (TISSUE)

1.70 LBS/LB WASTE x 80 LB/HR BURN RATE 136 LBS/HOUR

G. ADDITIONAL SECONDARY CHAMBER COMBUSTION AIR (THROAT AIR)

12000 CF/HR* x 0.075 LB/CF AIR 900 LBS/HOUR

H. TOTAL FLUE PRODUCTS 3209 LBS/HOUR

2. VELOCITY AND TIME CALCULATIONS

A. SCFM CALCULATION (PRODUCTS ASSUMED TO HAVE DENSITY CLOSE TO AIR)

3209 LBS/HR x $\frac{13.35 \text{ STD. CU. FT/LB}}{60 \text{ MIN/HR}}$ 714 SCFM

B. TOTAL PRODUCTS ACFM @ 1800 °F

$\frac{2260 \text{ °RANKINE}}{530 \text{ °RANKINE}}$ x 714.0 CFM 3045 ACFM

C. RETENTION TIME

$\frac{70.7 \text{ CU. FT}}{3045 \text{ ACFM}}$ x $\frac{60 \text{ SECONDS}}{1 \text{ MINUTE}}$ **1.39 SECONDS**

CREMATOR MASS BALANCE

Industrial Equipment & Engineering Company
Model IE43-PPII Cremation Incinerator, Fired on L.P. Gas

1800

THESE CALCULATIONS HAVE BEEN PREPARED TO EVALUATE THE COMBUSTION PROCESS IN THE MODEL IE43-PPII (POWER-PAK II) CREMATORY INCINERATOR AT A WORST CASE CONDITION WITH RESPECT TO RETENTION TIME.

THE INCINERATOR INSTITUTE OF AMERICA HAS PUBLISHED THE FOLLOWING SPECIFICATIONS COVERING AVERAGE WASTES.

WASTE TYPE	TYPE 0	TYPE 4
BTU PER POUND	8500	1000
POUND ASH PER POUND WASTE	0.05	0.05
POUND MOISTURE PER POUND WASTE	0.1	0.85
POUND COMBUSTIBLES PER POUND WASTE	0.85	0.1
HOURLY CONSUMPTION OF WASTE (LBS)	20	80

1. MASS OF PRODUCTS OF COMBUSTION FROM CONTAINER

A. COMBUSTION AIR

$$\frac{8500 \text{ BTU/LB}}{100 \text{ BTU/SCF OF AIR*}} \times 0.075 \text{ LB/SCF OF AIR} \qquad 6.38 \text{ LB/LB BURNED}$$

B. COMBUSTIBLES AND WATER VAPOR FROM CHART ABOVE 0.95 LB/LB BURNED

C. TOTAL FLUE PRODUCT MASS PER LB BURNED 7.33 LB/LB BURNED

2. MASS OF PRODUCTS OF COMBUSTION FROM BODY

A. COMBUSTION AIR

$$\frac{1000 \text{ BTU/LB}}{100 \text{ BTU/SCF OF AIR*}} \times 0.075 \text{ LB/SCF OF AIR} \qquad 0.75 \text{ LB/LB BURNED}$$

B. COMBUSTIBLES AND WATER VAPOR FROM CHART ABOVE 0.95 LB/LB BURNED

C. TOTAL FLUE PRODUCT MASS PER LB BURNED 1.70 LB/LB BURNED

SPECIFICATIONS		
PRIMARY BURNER FUEL CONSUMPTION (MMBTU/HR)	0.5	
SECONDARY BURNER FUEL CONSUMPTION (MMBTU/HR)	1.2	
ADDITIONAL SECONDARY AIR SUPPLIED (CFM)	200	
SEC. CHAMBER TEMPERATURE (°F)	1800	<= = = ACTUAL
SECONDARY CHAMBER VOLUME (CU. FT)	70.7	OPERATING TEMP.
SEC. CHAMB. CROSS-SECTIONAL AREA (SQ. FT)	2.44	IS 1600°F MINIMUM
FLAME PORT AREA (SQ. FT)	2.95	
MIXING BAFFLES AREA (SQ. FT)	1.36	

*AIR AT STANDARD CONDITIONS

3. TOTAL FLUE PRODUCTS

A. MAXIMUM PRIMARY BURNER L.P. GAS USAGE

$$500000 \text{ BTU/HR} \times \frac{0.119 \text{ LBS/SCF}}{2500 \text{ BTU/SCF}} \qquad 24 \text{ LBS/HR}$$

B. COMBUSTION AIR FOR PRIMARY BURNER

$$\frac{500000 \text{ BTU/HR} \times}{100 \text{ BTU/SCF AIR}} \times 0.075 \text{ LB/SCF AIR} \qquad 375 \text{ LBS/HR}$$

C. MAXIMUM SECONDARY BURNER L.P. GAS USAGE

$$1200000 \text{ BTU/HR} \times \frac{0.119 \text{ LBS/SCF}}{2500 \text{ BTU/SCF}} \qquad 57 \text{ LBS/HOUR}$$

D. COMBUSTION AIR FOR SECONDARY BURNER

$$\frac{1200000 \text{ BTU/HR} \times}{100 \text{ BTU/SCF AIR}} \quad \underset{(75\% \text{ E.A.})}{1.75} \times 0.075 \text{ LB/SCF AIR} \qquad 1575 \text{ LBS/HOUR}$$

E. PRODUCTS FROM TYPE 0 WASTE (CONTAINER)

7.33 LBS/LB BURNED x 20 LB/HR BURN RATE 147 LBS/HOUR

F. PRODUCTS FROM TYPE 4 WASTE (TISSUE)

1.70 LBS/LB WASTE x 80 LB/HR BURN RATE 136 LBS/HOUR

G. ADDITIONAL SECONDARY CHAMBER COMBUSTION AIR (THROAT AIR)

12000 SCF/HR* x 0.075 LB/SCF AIR 900 LBS/HOUR

H. TOTAL FLUE PRODUCTS 3213 LBS/HOUR

2. VELOCITY AND TIME CALCULATIONS

A. SCFM CALCULATION (PRODUCTS ASSUMED TO HAVE DENSITY CLOSE TO AIR)

$$3213 \text{ LBS/HR} \times \frac{13.35 \text{ STD. CU. FT/LB}}{60 \text{ MIN/HR}} \qquad 715 \text{ SCFM}$$

B. TOTAL PRODUCTS ACFM @ 1800 °F

$$\frac{2260 \text{ °RANKINE}}{530 \text{ °RANKINE}} \times 715.0 \text{ CFM} \qquad 3049 \text{ ACFM}$$

C. RETENTION TIME

$$\frac{70.7 \text{ CU. FT}}{3049 \text{ ACFM}} \times \frac{60 \text{ SECONDS}}{1 \text{ MINUTE}} \qquad \mathbf{1.39 \text{ SECONDS}}$$

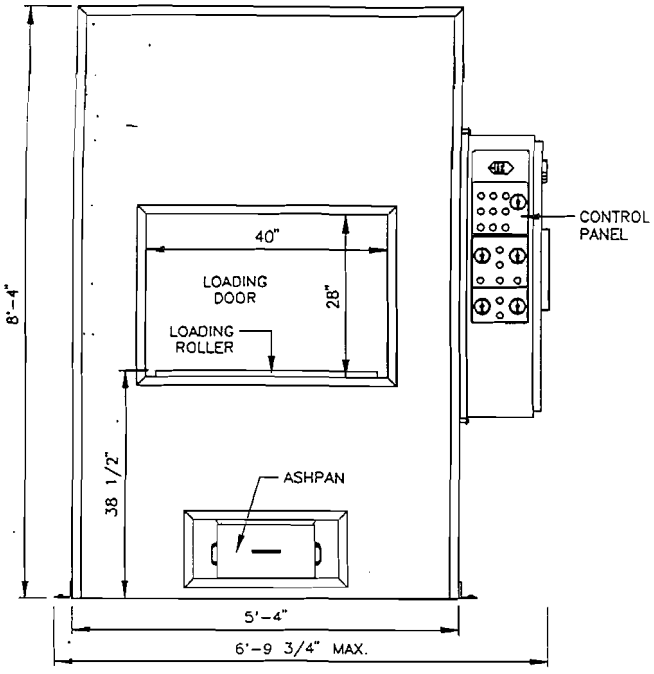

FRONT ELEVATION

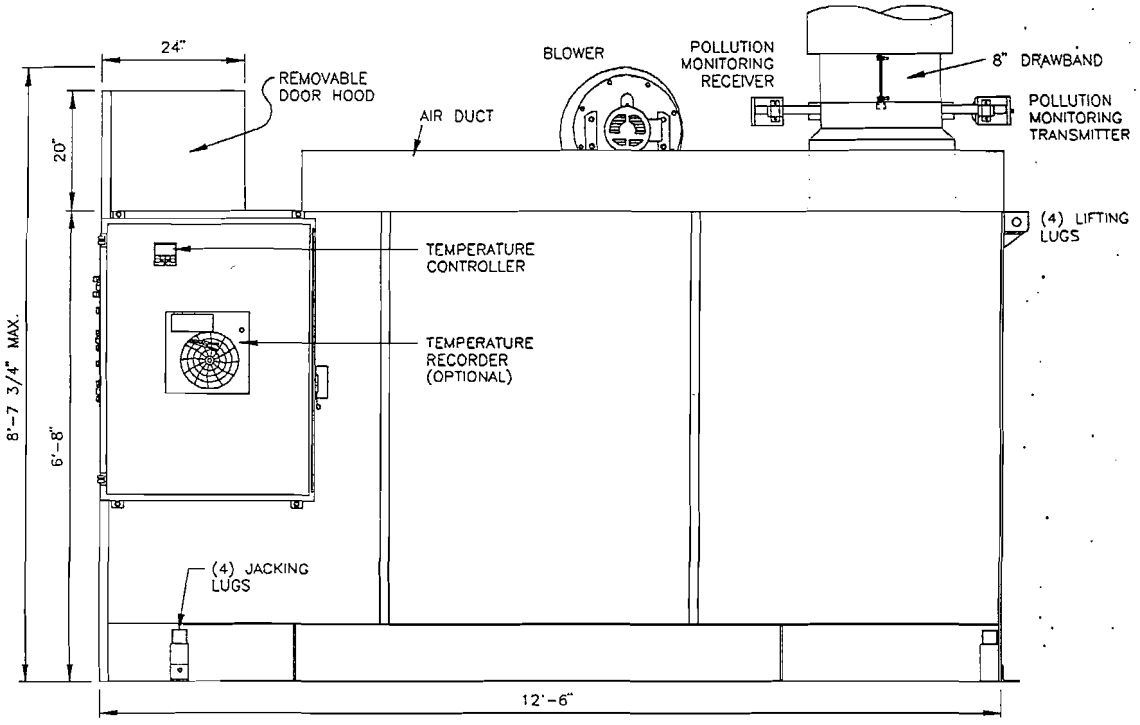

RIGHT SIDE ELEVATION

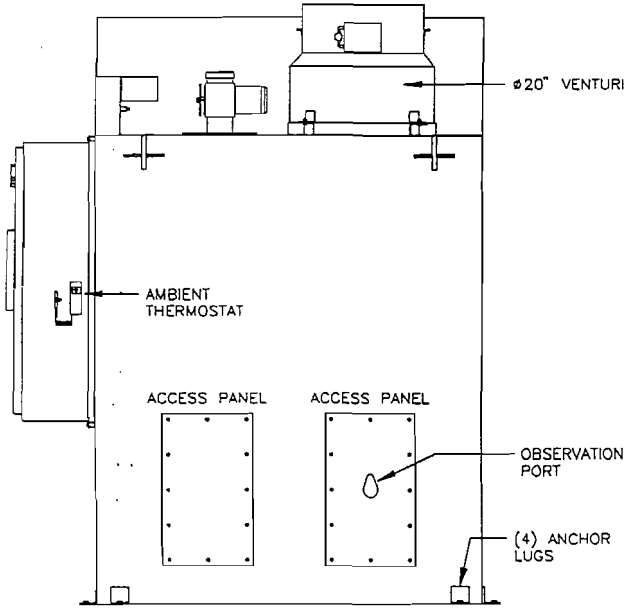

REAR ELEVATION

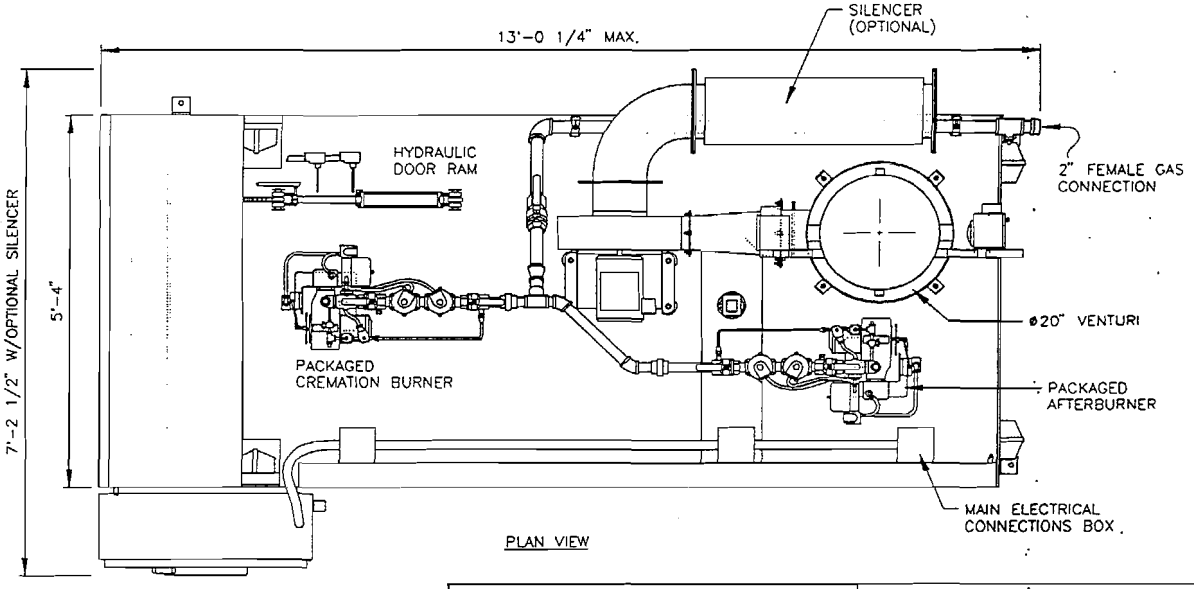

PLAN VIEW

INDUSTRIAL EQUIPMENT & ENGINEERING COMPANY

P.O. BOX 547796
ORLANDO, FLORIDA

Power-Pak II

Elevations
Eclipse Packaged Burners

DRAWN	G. BRAGUE	FILE	P2-ELVPE	SHEET NO. 1
CHECKED	R. THOMAS	DATE	07-31-96	
APPROVED	P. RAHILL	SCALE	3/8" = 1'	

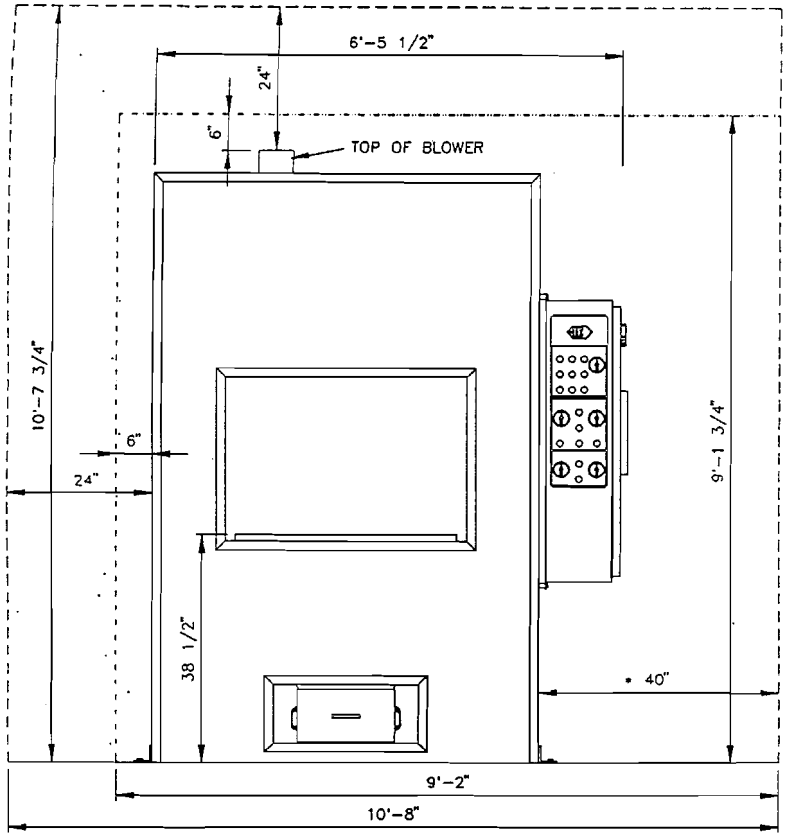

FRONT ELEVATION
(RECOMMENDED AND MINIMUM CLEARANCES)

CLEARANCES

	RECOMMENDED	MINIMUM
TOP:	2 FEET	6 INCHES
* SIDE:	2 FEET	6 INCHES
FRONT:	9 FEET	6 FEET
REAR:	3 FEET	2 FEET
STACK:	6 INCHES	6 INCHES

RECOMMENDED CLEARANCES FOR HEIGHT AND WIDTH ARE INDICATED (LEFT) BY A DASHED LINE. MINIMUM CLEARANCES ARE INDICATED BY A DOT-DASHED LINE.

* 40" SIDE CLEARANCE IS REQUIRED TO ACCESS ELECTRICAL PANEL BOX. THE BOX MAY BE POSITIONED ON EITHER SIDE (OR AS A REMOTE UNIT); RIGHT SIDE IS STANDARD.

REQUIREMENTS

FUEL-A PRESSURE REGULATOR ADJUSTED TO 7" W.C. (NATURAL GAS) OR 11" W.C. (L.P. GAS) WITH A FLOW CAPACITY OF 1.6-2.0 MILLION BTU/HR.

ELECTRICAL-230 VOLT, 3ø, 60 HERTZ FROM A 40 AMP BREAKER, OR 230 VOLT, 1ø, 60 HERTZ FROM A 70 AMP BREAKER.

AIR-PLACE A LOUVER NEAR THE REAR OF THE UNIT CAPABLE OF PASSING 2,500 CUBIC FEET/MINUTE OF FREE AIR (36" x 36").

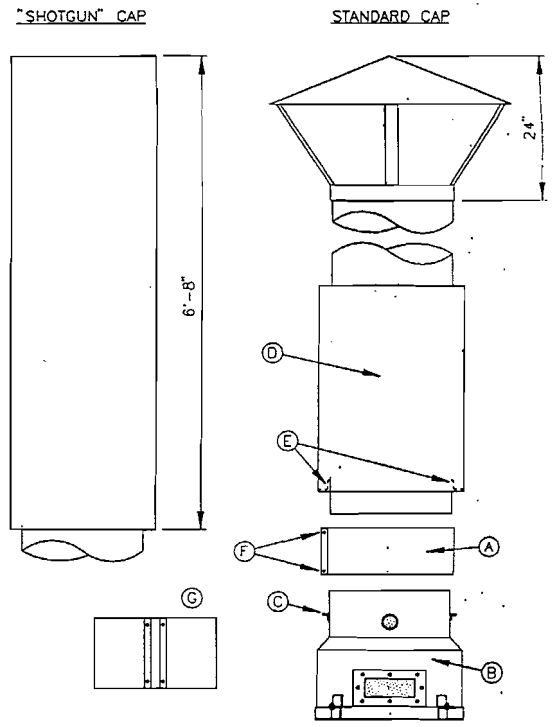

STACK ASSEMBLY DETAIL

(PHOTOCOLLAR IS ATTACHED TO CREMATOR)

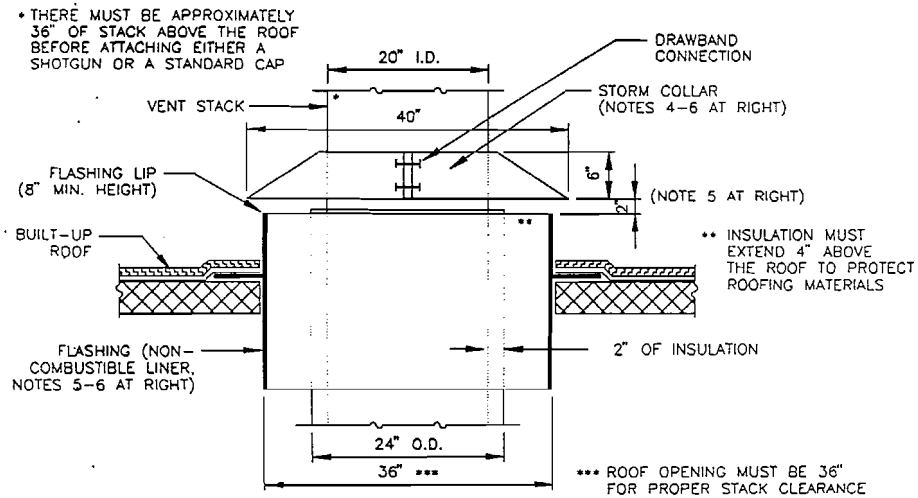

ROOF PENETRATION DETAIL
(SCALE 1/2" = 1')

STACK ASSEMBLY INSTRUCTIONS

1. SLIP THE STAINLESS STEEL DRAWBAND (A) OVER THE TOP OF PHOTOCOLLAR (B) AND SLIDE IT DOWN UNTIL IT RESTS ON THE PHOTOCOLLAR'S PROTRUDING EDGE (C).
2. LOWER THE VENT STACK (D) DOWN INSIDE THE DRAWBAND (A) UNTIL ITS SUPPORT TABS (E) REST ON THE EDGE OF THE DRAWBAND (A).
3. TIGHTEN DRAWBAND BOLTS (F) EVENLY UNTIL THEY FORM A TIGHT CONNECTION BETWEEN THE VENT STACK (D) AND THE PHOTOCOLLAR (B).
4. APPLY A 1/4" BEAD OF HIGH-TEMPERATURE SILICON (PROVIDED BY IEE) TO THE INSIDE OF THE STORM COLLAR SURFACE THAT WILL COME IN CONTACT WITH THE STACK.
5. PLACE THE STORM COLLAR WITH DRAWBAND CONNECTION ON THE UNINSULATED PORTION OF THE STACK ABOVE THE STACK INSULATION AND FLASHED ROOF HOLE. YOU MUST ALLOW 2" FOR PROPER VENTILATION, AS SHOWN IN THE ROOF PENETRATION DETAIL AT LEFT.
6. THE STORM COLLAR IS FURNISHED BY IEE. THE FLASHING (NON-COMBUSTIBLE LINER) MUST BE PROVIDED BY THE CUSTOMER.
7. A GALVANIZED COVERBAND (G) IS INCLUDED TO COVER THE STAINLESS STEEL DRAWBAND (A) AFTER IT IS TIGHTENED AND SECURE.
8. IF 50% OF THE STACK LENGTH IS ABOVE THE ROOF, GUY WIRES SHOULD BE USED.

INDUSTRIAL EQUIPMENT & ENGINEERING COMPANY
P.O. BOX 547796
ORLANDO, FLORIDA

Power-Pak II

Clearances
Eclipse Packaged Burners

DRAWN	G. BRAGUE	FILE	P2-ROMPE	SHEET NO. 2
CHECKED	R. THOMAS	DATE	08-01-96	
APPROVED	P. RAHILL	SCALE	3/8" = 1'	

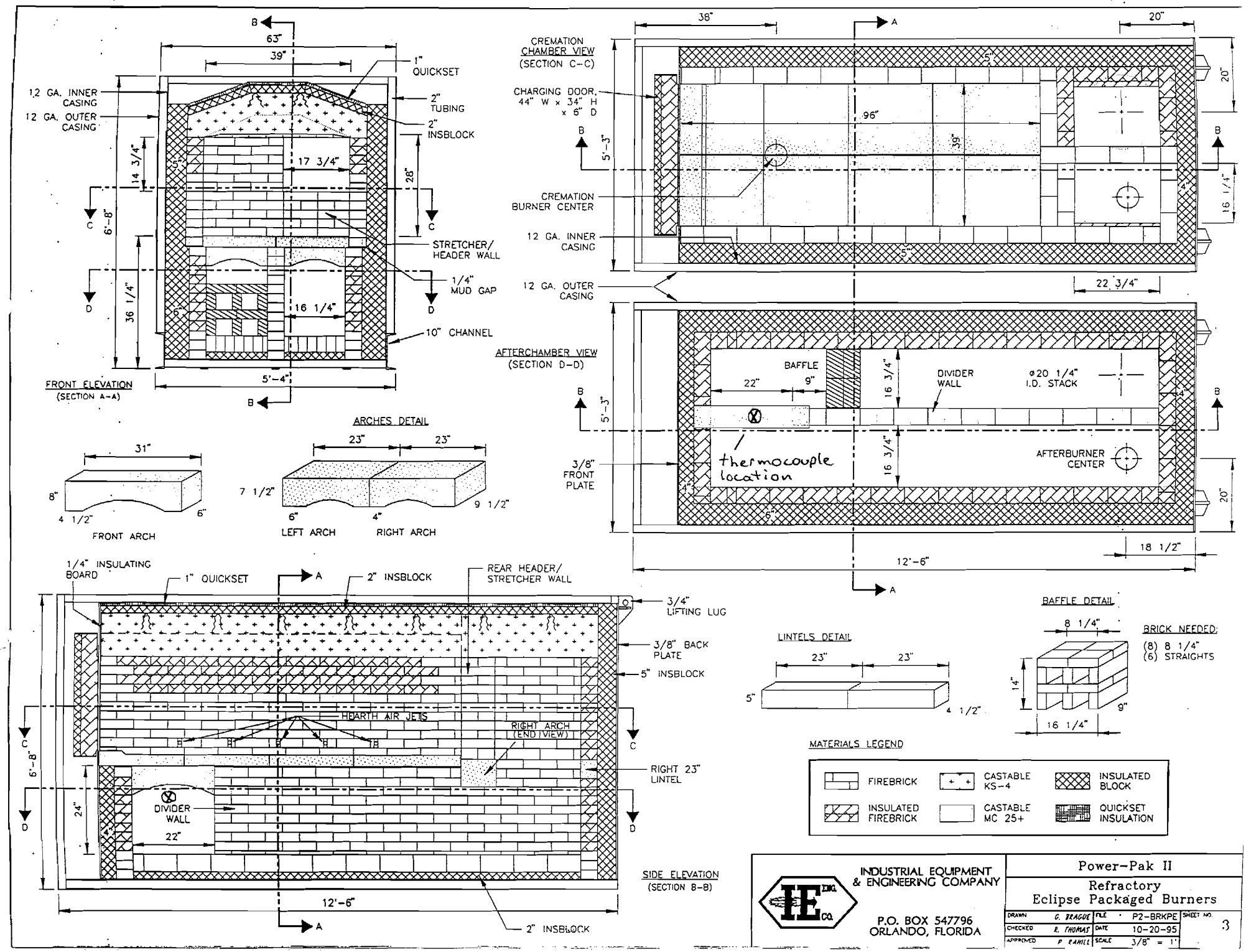
FRONT ELEVATION
(SECTION A-A)
63"
39"
1" QUICKSET
12 GA. INNER CASING
12 GA. OUTER CASING
2" TUBING
2" INSBLOCK
14 3/4"
17 3/4"
28"
6'-8"
STRETCHER/ HEADER WALL
1/4" MUD GAP
36 1/4"
16 1/4"
10" CHANNEL
5'-4"
CREMATION CHAMBER VIEW
(SECTION C-C)
38"
20"
CHARGING DOOR, 44" W x 34" H x 6" D
96"
39"
5'-3"
CREMATION BURNER CENTER
12 GA. INNER CASING
12 GA. OUTER CASING
22 3/4"
16 1/4"
AFTERCHAMBER VIEW
(SECTION D-D)
BAFFLE
22"
9"
16 3/4"
DIVIDER WALL
ø20 1/4" I.D. STACK
thermocouple location
AFTERBURNER CENTER
3/8" FRONT PLATE
18 1/2"
12'-6"
ARCHES DETAIL
31"
8"
4 1/2"
6"
FRONT ARCH
23"
23"
7 1/2"
6"
4"
9 1/2"
LEFT ARCH
RIGHT ARCH
1/4" INSULATING BOARD
1" QUICKSET
2" INSBLOCK
REAR HEADER/ STRETCHER WALL
3/4" LIFTING LUG
3/8" BACK PLATE
5" INSBLOCK
HEARTH AIR JETS
RIGHT ARCH (END VIEW)
RIGHT 23" LINTEL
DIVIDER WALL
24"
22"
SIDE ELEVATION
(SECTION B-B)
2" INSBLOCK
LINTELS DETAIL
BAFFLE DETAIL
8 1/4"
14"
9"
16 1/4"
BRICK NEEDED:
(8) 8 1/4"
(6) STRAIGHTS
MATERIALS LEGEND
FIREBRICK
CASTABLE KS-4
INSULATED BLOCK
INSULATED FIREBRICK
CASTABLE MC 25+
QUICKSET INSULATION
INDUSTRIAL EQUIPMENT & ENGINEERING COMPANY
P.O. BOX 547796
ORLANDO, FLORIDA
Power-Pak II
Refractory
Eclipse Packaged Burners
DRAWN G. BRAGUE
CHECKED R. THOMAS
APPROVED P. RAMILL
FILE P2-BRKPE
DATE 10-20-95
SCALE 3/8" = 1'
SHEET NO. 3

DR 4200 GP/EV*

Digital Circular Chart Recorders

A NEW STANDARD

Honeywell's new multi-purpose circular chart recorders, the DR 4200 GP and the DR 4200 EV, answer the need for basic function, low priced instrumentation. The GP is ideally suited to applications handled by low cost analog recorders, with accuracy requirements not exceeding 0.50%. The EV is appropriate for most high performance applications requiring accuracy not exceeding 0.25%. Some typical examples include: Dairy, textile and food machinery, industrial ovens, environmental chambers, pharmaceutical equipment, industrial furnaces and farm machinery. Both recorders use 10" charts and are available in either single or dual pen models.

The DR 4200 offers you the best of both worlds. It combines the simplicity, reliability and low cost of analog instruments with the performance superiority of digital design. It's fully field configurable, a real benefit for your multi-range/actuation requirements. You will find it uncomplicated and easy to use because it does what it has to, and no more.

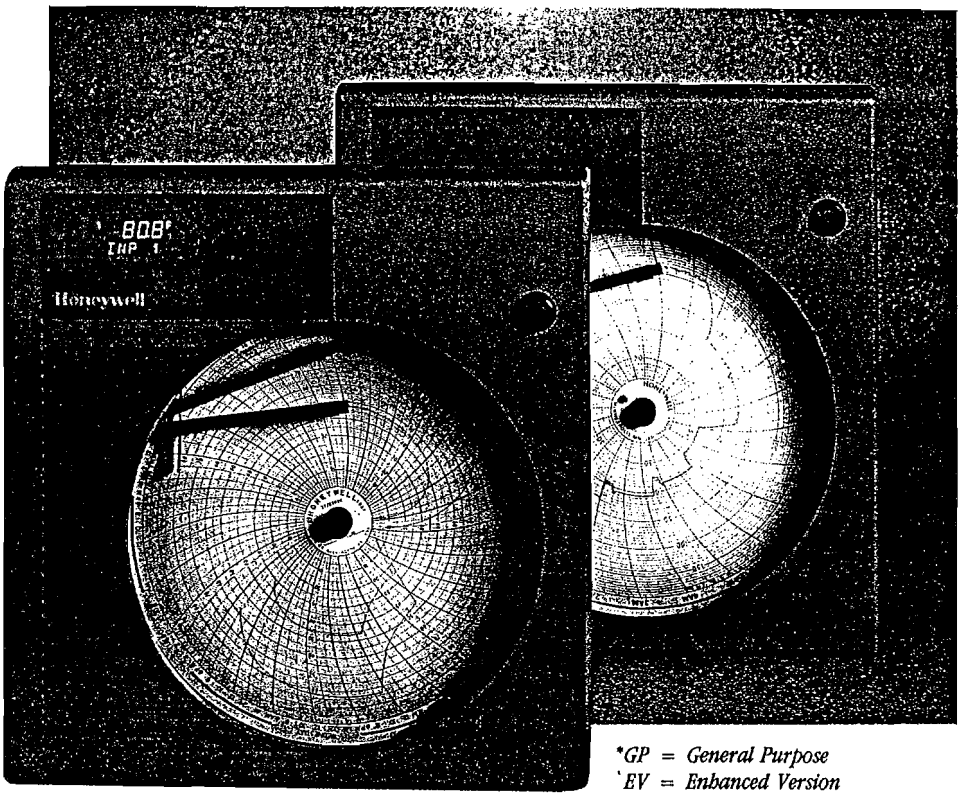

*GP = General Purpose
*EV = Enhanced Version

THE DIGITAL DIFFERENCE

The DR 4200 GP and EV are multi-application, microprocessor-based recorders for the '90s. Both models feature simple, modular construction making them easy to maintain, modify and service. Chart range and rotation speed are easily set and reset in the field. Design simplicity makes operation a snap, even for inexperienced operators.

The DR 4200 GP is set by adjusting a group of mechanical switches while the DR 4200 EV offers the convenience of a bright, digital display and a configuration keypad. Honeywell stocks over 150 pre-printed charts for use with either model. Both units are self-testing. Since there is no custom configuration required on either model, you can stock up and save money.

DR 4200 GP DIGITAL CIRCULAR CHART RECORDER

The DR 4200 GP (General Purpose) features all the essential recording capabilities at a price within everyone's reach.

- **Accuracy**
  0.50% of span
- **Built in Self Test**
- **Field Configurable**
  Set chart range and speed to meet your individual requirements.
- **Digital Electronics**
  Assures accurate, reliable operation in severe applications.
- **Actuations For The GP**
  Accepts thermocouple types J, K and T; 100 ohm DIN RTD; and the following linear actuations, 4-20 mA, 0-20 mV, 0-50 mV, 0-5 Vdc and 1-5 Vdc. Over 150 preprinted charts available.
- **UL Approval***
  Permit its use where many safety, fire and insurance codes must be observed.

* pending

- **Selected Thermocouple Burnout Protection**
  Should thermocouple fail, pen is driven upscale, safely shutting down your process. Can be field-adjusted for downscale failsafe.
- **One- or Two-Pen Recording**
  Record is drawn on a large 10" diameter chart suitable for filing. Charts may be created per shift, per day, or any other suitable schedule your process requires.
- **High or Low Manual Reset PV Limit Alarm**
  Adjustable; will energize a relay which can be used to activate an alarm or shut down a process.
- **Control Options**
  On/Off control. One or two relays per pen.

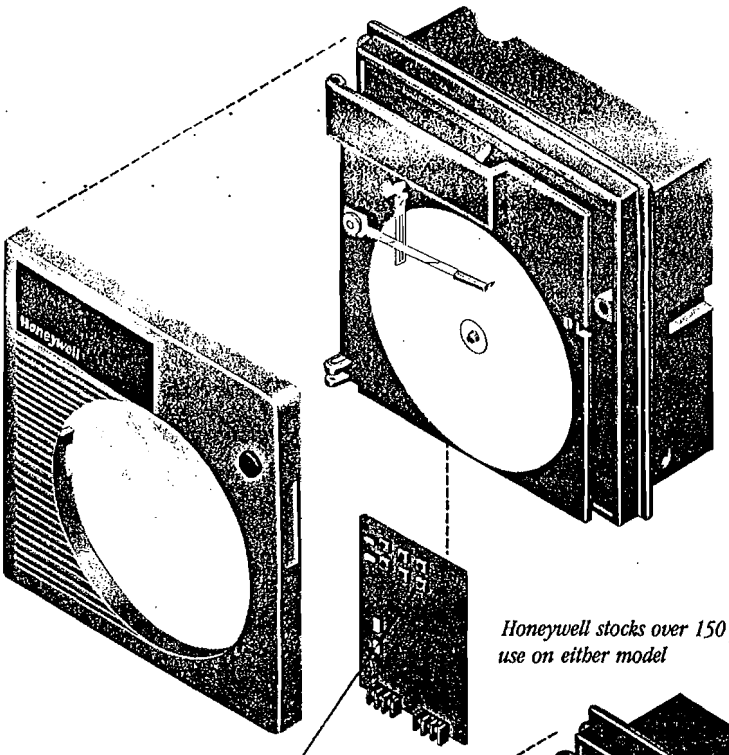

Honeywell stocks over 150 preprinted charts for use on either model

DR 4200 GP is fully user configurable via a set of mechanical switches

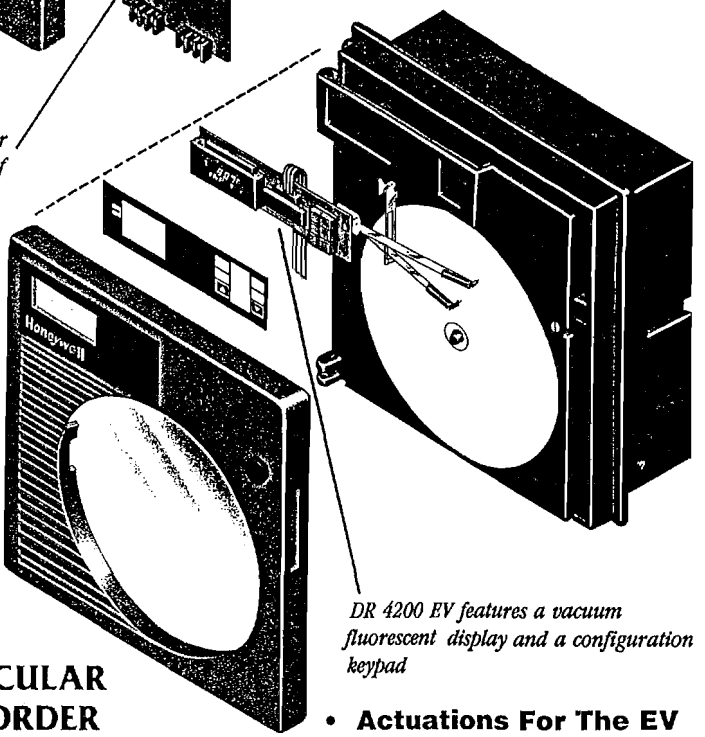

DR 4200 EV features a vacuum fluorescent display and a configuration keypad

DR 4200 EV DIGITAL CIRCULAR CHART RECORDER

The DR 4200 EV (Enhanced Version) offers all the features of the DR 4200 GP plus some high performance extras. Now you can have a digital recorder for what you'd expect to pay for an analog model.

- **Accuracy**
  0.25% of span (field calibrated)
- **Built In Self Test**
- **Digital Display**
  Bright, digital display is easy to read, even at a distance.
- **Configuration Keypad**
  All recording parameters are easily set up using plain English prompts and a simple keyboard.
- **Actuations For The EV**
  Accepts thermocouple types J, K, T, R, S, B, E, W5W26 and Ni Ni Moly; 100 ohm DIN RTD, and the following linear actuations, 4-20 mA, 0-10 mA, 0-100 mV, 0-1 Vdc, 0-5 Vdc, 1-5 Vdc and 0-10 Vdc.
- **More Sophisticated Control**
  Up to 2 loops are available with current or relay outputs. On/off, time proportioning, duplex time proportioning, plus alarm in some cases. PID A or PD/MR are available algorithms.
- **Totalization of PV's**
  Up to 2 loops available.
- **24 Volt Power Supply**
  Optional 24 volt power supply to drive transmitters.

NOW THERE ARE FOUR LEADERLINE CIRCULAR CHART RECORDERS

The DR 4200 GP and EV join two other outstanding instruments, the DR 4500 Classic and the DR 4500 Truline, to round out a complete product offering of Leaderline circular chart recorders.

While these recorders vary in functionality and accuracy, all feature the engineering excellence that created the Truline, the only circular chart recorder sophisticated enough to create its own chart as it records.

DR 4200 GP
Accuracy ± 0.50% of span
Up to 2 inputs (limited selection)
Fully user configurable
10" chart
Up to 2 control loops - on/off control only
High or low limit - 1 loop only
Limited output types

DR 4200 EV
Accuracy ± 0.50% of span (factory calibrated)
± 0.25% of span (field calibrated)
Up to 2 inputs
Fully user configurable
Digital PV display
10" chart
Up to 2 control loops - full PID control
Totalization
Optional 24 volt power supply

DR 4500 Classic
Accuracy ± 0.15% of span
Up to 2 inputs
Fully user configurable
Digital PV display
12 " chart
1 control loop - full PID control, full range of outputs
Totalization

DR 4500 Truline
Accuracy ± 0.15% of span
Up to 4 inputs
Fully user configurable
Digital PV display
12" chart
Up to 2 control loops - full PID control, full range of outputs
Totalization
Set point programming
Communications over DMCS/RS232
Prints its own charts as it records
Prints operator configured information like time, date, and process identification on chart
Message printing and multiple relays available

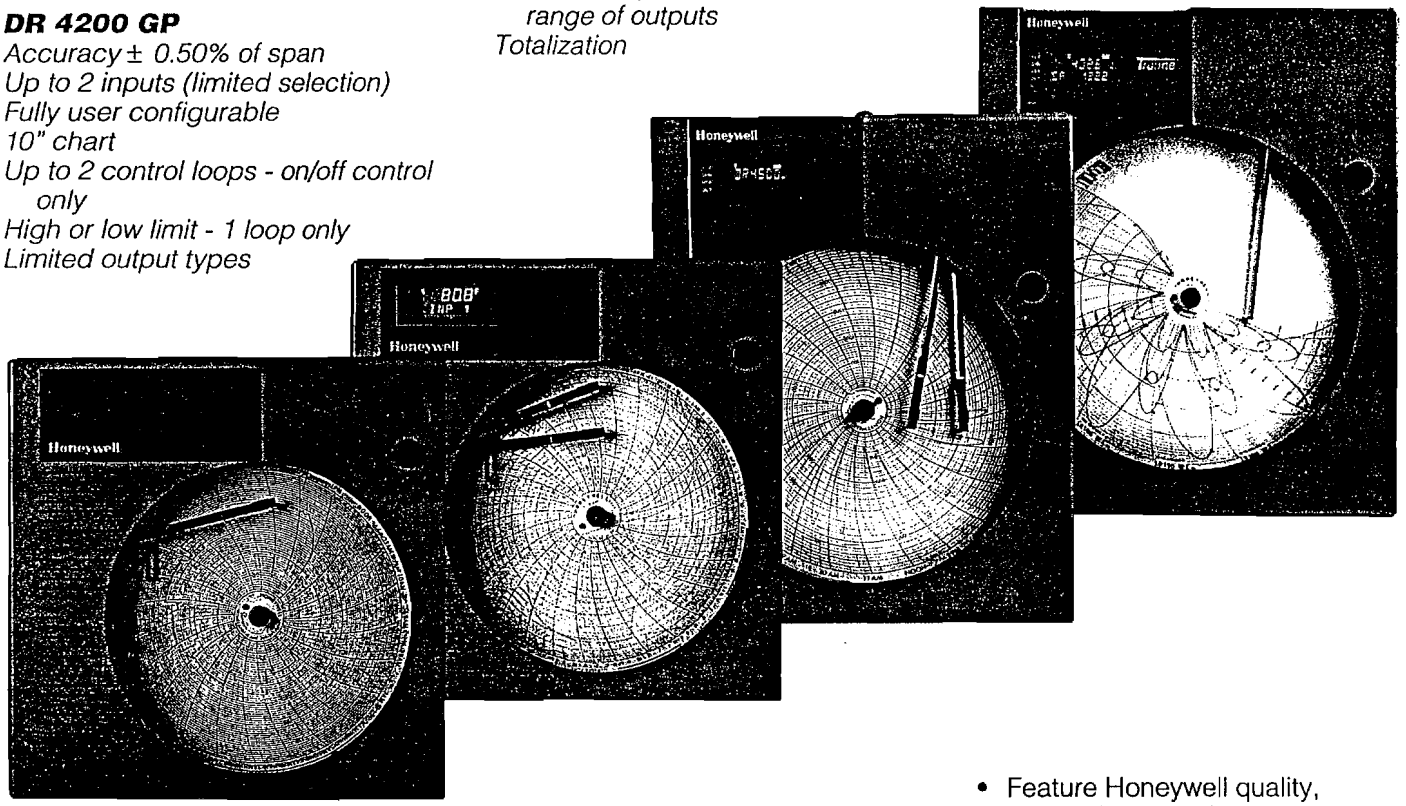

ALL LEADERLINE INSTRUMENTS:

- Offer the best price/performance ratio of any competitive instrument in their class.
- Are priced below all competitive instruments in their class.
- Feature Honeywell quality, assured by a rock-solid warranty program, an immediate replacement policy, a toll-free telephone "Help" program, and a customer support network second to none.
- Provide functionality that's targeted to market segments so that you never have to buy more capability than you need.

A COMPLETE PRODUCT OFFERING

The DR 4200 GP and DR 4200 EV are the latest additions to Honeywell's expanding line of digital instrumentation. Talk to your Honeywell distributor or sales representative for price an delivery information on the DR 4200 GP, the DR 4200 EV, and other Honeywell digital recorders.

If it's worth recording, it's worth specifying Honeywell.

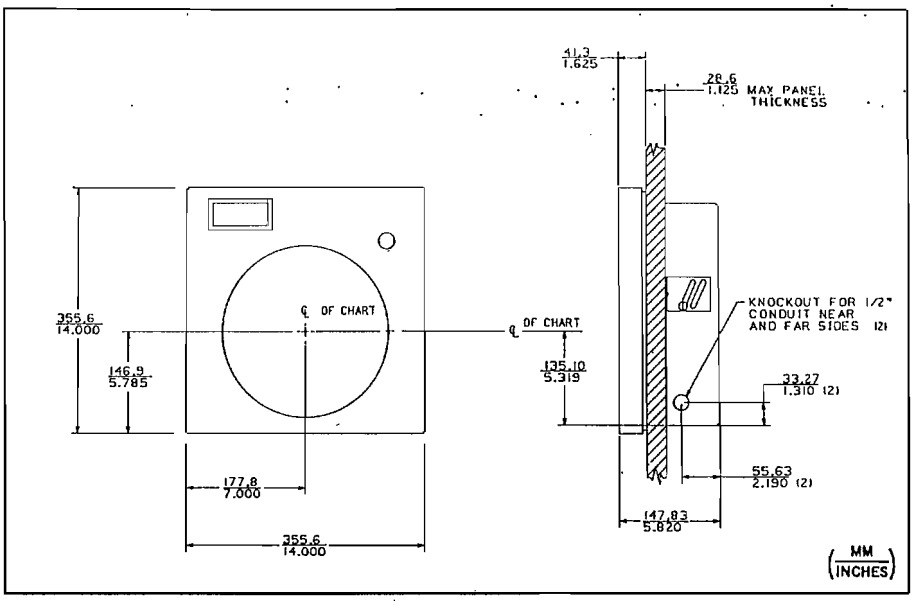

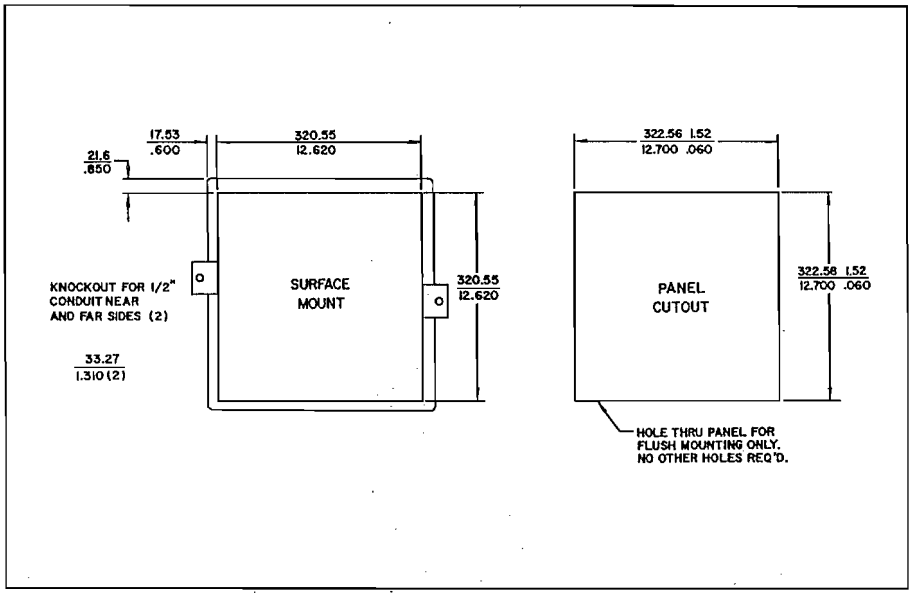

All specifications subject to change without notice.

Honeywell

HELPING YOU CONTROL YOUR WORLD

Industrial Automation And Control Division, 1100 Virginia Drive, Fort Washington, PA 19034

44-01-58-03 (20M) 8/90 ©HONEYWELL INC. PRINTED IN U.S.A

TEMPERATURE CONTROL CORPORATION

CONTROL CORPORATION
6800 EDGEWATER COMMERCE PARKWAY
EDGEWATER NORTH COMMERCE PARK
ORLANDO, FLORIDA 32810
407/292-6800 FAX 407/292-6819

Limits of Error for Thermocouples and Thermocouple Wire

Reference Junction 0°C (32°F)

Thermocouple Type	Temperature Range	Limits of Error Standard	Limits of Error Special
T	0 to 133°C (32 to 270°F) 133 to 350°C (270 to 662°F)	±1°C (2°F) ±.75%	±.5°C (1°F) ±.4%
J	0 to 293°C (32 to 559°F) 293 to 750°C (559 to 1382°F)	±2.2°C (4°F) ±.75%	±1.1°C (2°F) ±.4%
E	0 to 340°C (32 to 644°F) 340 to 900°C (644 to 1652°F)	±1.7°C (3°F) ±.5%	±1°C (2°F) ±.4%
K	0 to 293°C (32 to 559°F) 293 to 1250°C (550 to 2282°F)	±2.2°C (4°F) ±.75%	±1.1°C (2°F) ±.4%
R, S	0 to 600°C (32 to 1112°F) 600 to 1450°C (1112 to 2642°F)	±1.5°C (3°F) ±.25%	±.6°C (1°F) ±.1%
B	800 to 1700°C (1472 to 3092°F)	±.5%	—
T*	−200 to −66°C (−328 to −87°F) −66 to 0°C (−87 to +32°F)	±1°C (2°F) ±1.5%	—
E*	−200 to −100°C (−328 to −148°F) −100 to 0°C (−148 to +32°F)	±1.1°C (3°F) ±1%	—
K*	−200 to −110°C (−328 to −166°F) −110 to 0°C (−166 to +32°F)	±2.2°C (4°F) ±2%	—

*Thermocouples and thermocouple materials are normally supplied to meet the limits of error specified in the table for temperatures above 0°C (32°F). The same materials, however, may not fall within the sub-zero limits of error given in the second section of the table. If materials are required to meet the sub-zero limits, the purchase order must so state. Selection of materials usually will be required. Little information is available to justify establishing special limits of error for sub-zero temperatures. Limited experience suggests the following limits for types E and T thermocouples:

Type E	−200 to 0°C (−328 to +32°F)	1°C or .5%
Type T	−200 to 0°C (−328 to +32°F)	.5°C or .8%

These limits are given only as a guide for information purposes. Due to the characteristics of the materials, sub-zero limits of error for Type J thermocouples and special sub-zero limits for Type K thermocouples are not listed.

Limits of Error for Thermocouple Extension Wire

Reference Junction 0°C (32°F)

Extension Wire Type	Temperature Range	Limits of Error Standard	Limits of Error Special
KX	0 to 200°C (32 to 392°F)	±2.2°C (4°F)	—
JX	0 to 200°C (32 to 392°F)	±2.2°C (4°F)	±1.1°C (2°F)
EX	0 to 200°C (32 to 392°F)	±1.7°C (3°F)	—
TX	−60 to +100°C (−76 to 212°F)	±1.0°C (2°F)	±.5°C (1°F)

Limits of Error for Thermocouple Compensating Extension Wire

Reference Junction 0°C (32°F)

Thermocouple Type	Compensating Wire Type	Temperature Range	Limits of Error
R, S	SX‡	0 to 200°C (32 to 392°F)	±5°C (9°F)
B	BX#	0 to 100°C (32 to 212°F)	0°C or F −3.7°C (6.7°F)

†Due to the non-linearity of the types R, S, and B temperature-emf curves, the error introduced into a thermocouple system by the compensating wire will be variable when expressed in degrees. The degree C limits of error are based on the following measuring junction temperatures:

Type Wire	Measuring Junction Temperature
SX	Greater than 870°C (1598°F)
BX	Greater than 1000°C (1832°F)

‡Copper (+) versus copper nickel alloy (−)

#Copper versus copper compensating extension wire, usable to 100°C (212°F) with maximum errors as indicated, but with no significant error over 0 to 50°C (32 to 122°F) range. Matched proprietary alloy compensating wire is available for use over the range 0 to 200°C (32 to 392°F) with claimed limits of error ±3.7°C†.

Color Coding

Standard ANSI color coding is used on all insulated thermocouple wire and extension wire when type of insulation permits. In color coding, the right is reserved to include a tracer to distinguish the calibration.

ANSI Type	Magnetic			Single	ANSI Color Code Over-all Extension Wire	Over-all T/C Wire
T/C	Single	Yes	No			
T	TP TN		● ●	Blue Red	Blue	Brown
J	JP JN	● 	 ●	White Red	Black	Brown
E	EP		● ●	Purple Red	Purple	Brown
K	KP KN	 ●	●	Yellow Red	Yellow	Brown
R, S	RP, SP RN, SN		● ●	Black Red	Green	—
B	BP BN		● ●	Grey Red	Grey	—

ANSI LETTER DESIGNATIONS Thermocouple and extension wires are now generally ordered and specified by ANSI letter designations for calibration. Popular generic and trade name examples are Chromel/Alumel-ANSI Type K; Iron/Constantan-ANSI Type J; Copper/Constantan-ANSI Type T; Chromel/Constantan-ANSI Type E; Platinum/Platinum 10% Rhodium-ANSI Type S; Platinum/Platinum 13% Rhodium-ANSI Type R, and Platinum 6% Rhodium/Platinum 30% Rhodium-ANSI Type B. Positive and negative legs are identified by the appropriate letter suffixes P and N, respectively. Those not familiar with this system will find the table helpful:

ANSI Letter Designations	Generic or Trade Names
JP	Iron
JN, EN, or TN	Constantan, Cupron, Advance
TP	Copper
KP or EP	Chromel, Tophel, T_1, Thermokanthal KP
KN	Alumel, Nial, T_2, Thermokanthal KN
RP	Platinum 13% Rhodium
SP	Platinum 10% Rhodium
RN or SN	Pure Platinum
BN	Platinum 6% Rhodium
BP	Platinum 30% Rhodium

Trade names: Cupron, Nial and Tophel—Wilbur B. Driver Co. • Advance, T_1 and T_2—Driver-Harris Co. • Chromel and Alumel—Hoskins Mfg. Co. • Thermokanthal KP and Thermokanthal KN—The Kanthal Corporation

Emissions Testing

IE43-PPII, Power-Pak II Cremator

Southeastern Crematory / Family Funeral Care
Hudson, Florida

November 3, 1999

Project Participants

Byron E. Nelson
Kenneth M. Roberts
Sean P. McGinnis

Emissions Testing

IE43-PPII, Power-Pak II Cremator

Southeastern Crematory / Family Funeral Care
Hudson, Florida

November 3, 1999

Table of Contents

		Page
1.0	INTRODUCTION	1
2.0	SUMMARY OF RESULTS	1
3.0	PROCESS DESCRIPTION	3
4.0	SAMPLING PROCEDURES	5
	4.1 Methods	5
	4.2 Sampling Locations	5
	4.3 Sampling Trains	6
	4.4 Sample Collection	6
	4.5 Sample Recovery	9
5.0	ANALYTICAL PROCEDURE	9
	5.1 Pretest Preparation	9
	5.2 Analysis	9
APPENDIX		10

Project Participants
Certification
Visible Emissions Evaluation
Process Weight Statement
Temperature Chart
Laboratory Data
Particulate Data Sheets
Gas Analysis Sheets
CO Strip Charts
Calibration Data
Calculations and Symbols

1.0 INTRODUCTION

Southern Environmental Sciences, Inc. conducted emissions testing of the Industrial Equipment & Engineering Company Model IE43-PPII, Power-Pak II cremator on November 3, 1999. Unit B at the facility was tested. The unit is located at 13011 U.S. Highway 19, Hudson, Florida. Testing was conducted for the particulates, carbon monoxide, and visible emissions. Oxygen (O_2) concentrations were measured in order to correct results to 7% O_2.

2.0 SUMMARY OF RESULTS

The equipment was found to be in compliance with all applicable emission limiting standards. Results of the particulate and carbon monoxide testing are summarized in Table 1.

The average measured particulate emission concentration was 0.031 grains per dry standard cubic foot (corrected to 7% O_2).

The average measured carbon monoxide emission concentration was 10.7 parts per million by volume (corrected to 7% O_2).

A visible emissions evaluation was conducted over a 60 minute period. The maximum three minute average opacity was 0 percent.

The testing personnel detected no objectionable odor during the stack test.

TABLE 1. EMISSIONS TEST SUMMARY

Company: Southeastern Crematory/Family Funeral Care
Source: Human Crematory Unit B

	Run 1	Run 2	Run 3	
Date of Run	11/03/99	11/03/99	11/03/99	
Process Weight (lbs., body + container)	275	170	220	
Start Time (24-hr. clock)	1043	1410	1647	
End Time (24-hr. clock)	1146	1512	1750	
Vol. Dry Gas Sampled Meter Cond. (DCF)	34.711	32.093	30.966	
Gas Meter Calibration Factor	1.015	1.015	1.015	
Barometric Pressure at Barom. (in. Hg.)	30.24	30.19	30.17	
Elev. Diff. Manom. to Barom. (ft.)	0	0	0	
Vol. Gas Sampled Std. Cond. (DSCF)	34.696	31.351	30.459	
Vol. Liquid Collected Std. Cond. (SCF)	4.894	4.130	4.894	
Moisture in Stack Gas (% Vol.)	12.4	11.6	13.8	
Molecular Weight Dry Stack Gas	29.63	29.53	29.58	
Molecular Weight Wet Stack Gas	28.19	28.19	27.98	
Stack Gas Static Press. (in. H2O gauge)	-0.04	-0.03	-0.03	
Stack Gas Static Press. (in. Hg. abs.)	30.24	30.19	30.17	
Average Square Root Velocity Head	0.174	0.152	0.147	
Average Orifice Differential (in. H2O)	0.935	0.766	0.700	
Average Gas Meter Temperature (Deg. F)	83.1	91.4	90.3	
Average Stack Gas Temperature (Deg. F)	1128.6	1145.2	1145.7	
Pitot Tube Coefficient	0.84	0.84	0.84	
Stack Gas Vel. Stack Cond. (ft./sec.)	17.04	14.94	14.59	
Effective Stack Area (sq. ft.)	2.18	2.18	2.18	
Stack Gas Flow Rate Std. Cond. (DSCFM)	657	574	545	
Stack Gas Flow Rate Stack Cond. (ACFM)	2,231	1,956	1,909	
Net Time of Run (min.)	60	60	60	
Nozzle Diameter (in.)	0.601	0.601	0.601	
Percent Isokinetic	97.6	101.4	103.1	
Oxygen (%)	10.3	10.2	10.0	
				Average
Particulate Collected (mg.)	32.0	47.4	67.4	49.0
Particulate Emissions (lb./hr.)	0.080	0.114	0.160	0.118
Particulate Emissions (gr./DSCF)	0.014	0.023	0.034	0.024
Particulate Emissions (gr./DSCF @ 7% O2)	0.019	0.030	0.043	0.031
Allowable Part. Emissions (gr./DSCF @ 7% O2)				0.080
CO Emissions (lb./hr.)	0.051	0.005	0.012	0.023
CO Concentration (ppm)	17.9	1.8	5.0	8.2
CO Concentration (ppm @ 7% O2)	23.4	2.3	6.4	10.7
Allowable CO Concentration (ppm @ 7% O2)				100

Note: Standard conditions 68 Deg F, 29.92 in. Hg

3.0 PROCESS DESCRIPTION

The IE43-PPII, Power-Pak II cremator has a multiple chamber design with a 100 pound per hour nominal burning capacity. A human body enclosed in a wooden or cardboard container or animal tissue is loaded into the primary chamber. The afterburner ignites and heats the secondary chamber to the required temperature. A process controller that automatically modulates the gas supply to the afterburner maintains the secondary chamber temperature.

After the secondary chamber has been heated sufficiently, the cremation burner ignites and the cremation process is initiated. A typical cremation takes 90 to 150 minutes, but the time may vary depending on the body weight and various other factors.

A gas flow schematic is shown in Figure 1. Process rates for the test are included in the appendix.

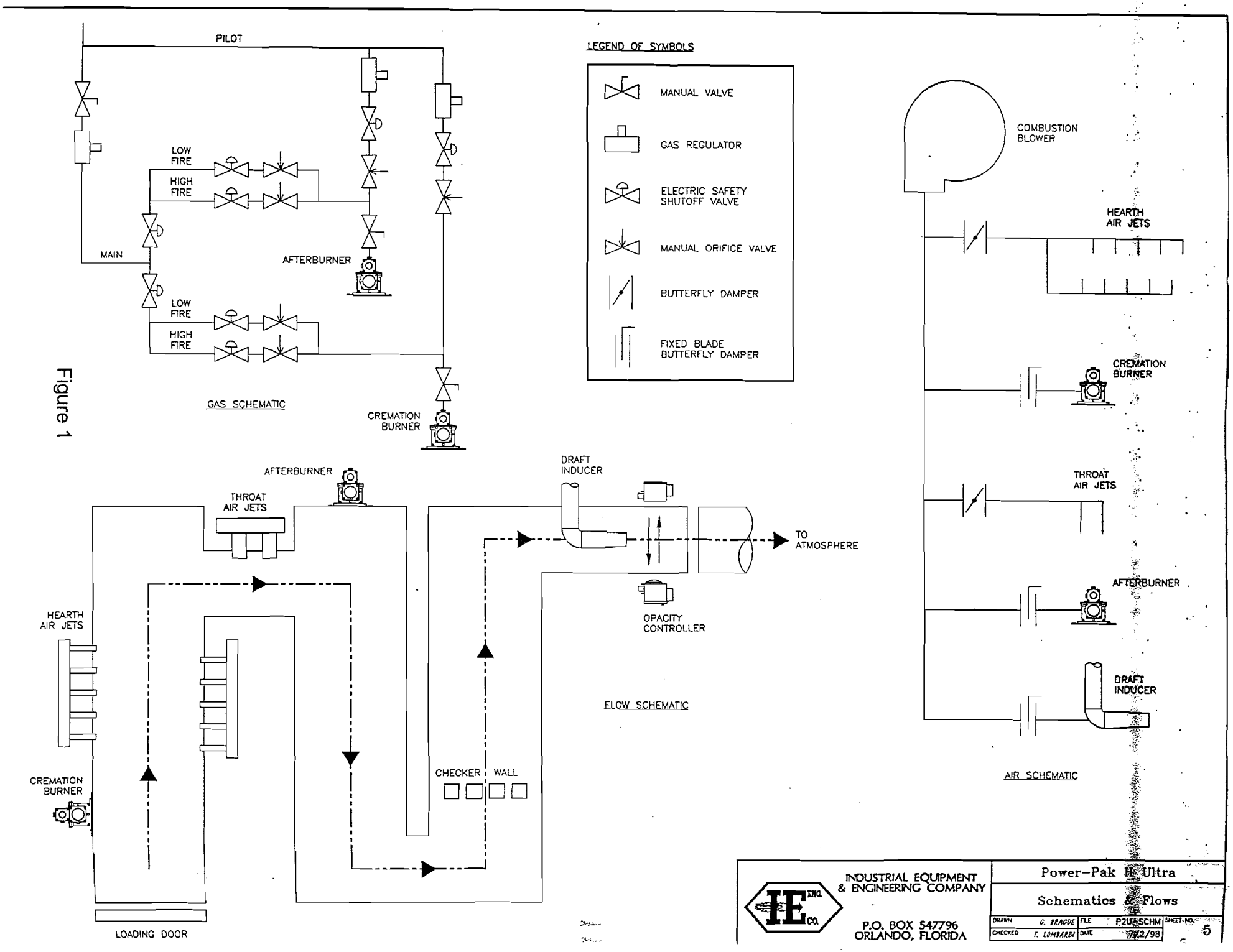
PILOT
LOW FIRE
HIGH FIRE
MAIN
AFTERBURNER
LOW FIRE
HIGH FIRE
GAS SCHEMATIC
CREMATION BURNER
LEGEND OF SYMBOLS
MANUAL VALVE
GAS REGULATOR
ELECTRIC SAFETY SHUTOFF VALVE
MANUAL ORIFICE VALVE
BUTTERFLY DAMPER
FIXED BLADE BUTTERFLY DAMPER
COMBUSTION BLOWER
HEARTH AIR JETS
CREMATION BURNER
THROAT AIR JETS
AFTERBURNER
DRAFT INDUCER
AIR SCHEMATIC
AFTERBURNER
THROAT AIR JETS
DRAFT INDUCER
TO ATMOSPHERE
OPACITY CONTROLLER
HEARTH AIR JETS
CREMATION BURNER
CHECKER WALL
FLOW SCHEMATIC
LOADING DOOR
INDUSTRIAL EQUIPMENT & ENGINEERING COMPANY
P.O. BOX 547796
ORLANDO, FLORIDA
Power-Pak II Ultra
Schematics & Flows
DRAWN G. BRAGUE
CHECKED T. LOMBARDI
FILE P2U-SCHM
DATE 7/2/98
SHEET NO. 5

Figure 1

4.0 SAMPLING PROCEDURES

4.1 Methods

Particulate sampling and analyses were conducted in accordance with EPA Method 5 - Determination of Particulate Emissions from Stationary Sources, 40 CFR 60, Appendix A. Carbon monoxide emissions were conducted in accordance with EPA Method 10 - Determination of Carbon Monoxide Emissions from Stationary Sources, 40 CFR 60, Appendix A. The visible emissions evaluation was performed in accordance with EPA Method 9 - Visual Determination of the Opacity of Emissions from Stationary Sources, 40 CFR 60, Appendix A. The oxygen content of the stack was determined in accordance with EPA Method 3 - Gas Analysis for Carbon Dioxide, Oxygen, Excess Air, and Dry Molecular Weight, 40 CFR 60, Appendix A.

4.2 Sampling Locations

Locations of the sample ports and stack dimensions are shown in Figure 2. Particulate sampling was accomplished by conducting horizontal traverses through each of two ports located on the stack at a 90° angle from one another. Twenty-four sample points were chosen in accordance with EPA Method 1 - Sample and Velocity Traverses for Stationary Sources, 40 CFR 60, Appendix A. Carbon monoxide and oxygen sampling were performed from the same sampling ports as the particulate sampling.

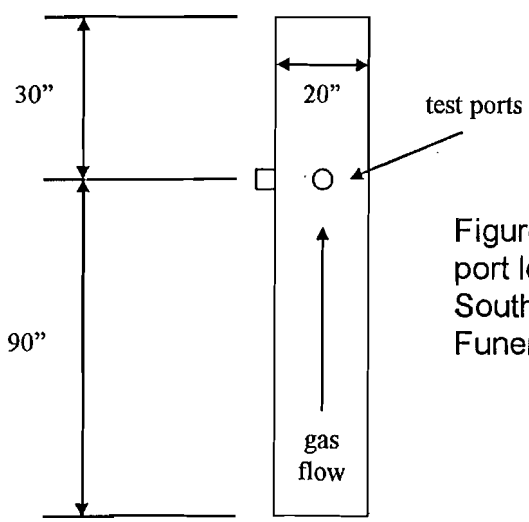

Figure 2. Stack dimensions and test port locations for IE43-PPII cremator at Southeastern Crematory / Family Funeral Care.

4.3 Sampling Trains

The particulate sampling train consisted of a Nutech Corporation 3 foot water-cooled probe utilizing a heated stainless steel liner, heated glass fiber filter, and four impingers arranged as shown in Figure 3. Flexible tubing was used between the heated filter and the impingers. The first two impingers were each charged with 100 milliliters of water, the third served as a dry trap, and the fourth impinger was charged with indicating silica gel desiccant. The impingers were cooled in an ice and water bath during sampling. A Nutech Corporation control console was used to monitor the gas flow rates and stack conditions during sampling.

The carbon monoxide sampling train consisted of a stainless steel probe, teflon sample line, condenser, silica gel and ascarite tubes, and a Thermo Environmental Instruments, Inc. Model 48 Gas Filter Correlation Carbon Monoxide Analyzer. This sampling train is shown in Figure 4.

The oxygen sampling train consisted of a probe, sample line, tedlar bag in a rigid container, valve, vacuum pump and flow meter.

4.4 Sample Collection

Prior to particulate sampling, the pitot tubes were checked for leaks and the manometers were zeroed. A pretest leak check of the particulate sampling train was conducted by sealing the nozzle and applying a 15" Hg. vacuum. A leak rate of less than 0.02 cubic feet per minute was considered acceptable. Particulate sample was collected isokinetically for two and one half minutes at each of the points sampled.

The carbon monoxide analyzer was calibrated immediately before the beginning and after the end of the test by introducing known gases into the instrument through the sampling train. Zero and calibration gases were also introduced after each run.

The tedlar bag used for obtaining an integrated oxygen sample was leak checked prior to the test by pressurizing it to 2 to 4 in. H_2O and allowing it to stand overnight. A deflated bag indicated a leak. A one hour integrated sample was obtained at a rate of 0.5 liters per minute for each run.

Carbon monoxide and oxygen sampling were conducted simultaneously with particulate sampling.

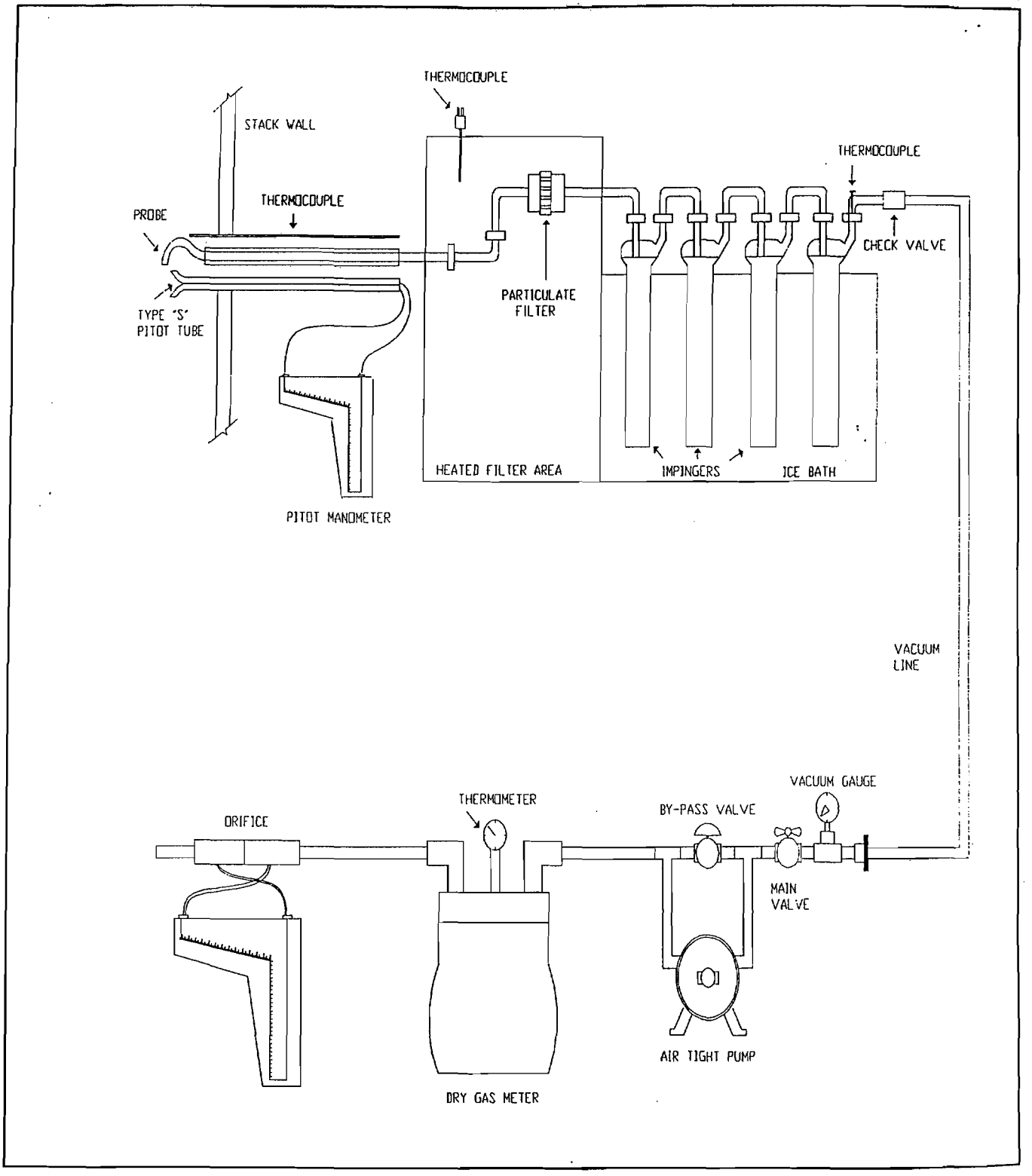

Method 5 Sampling Train.

Figure 3

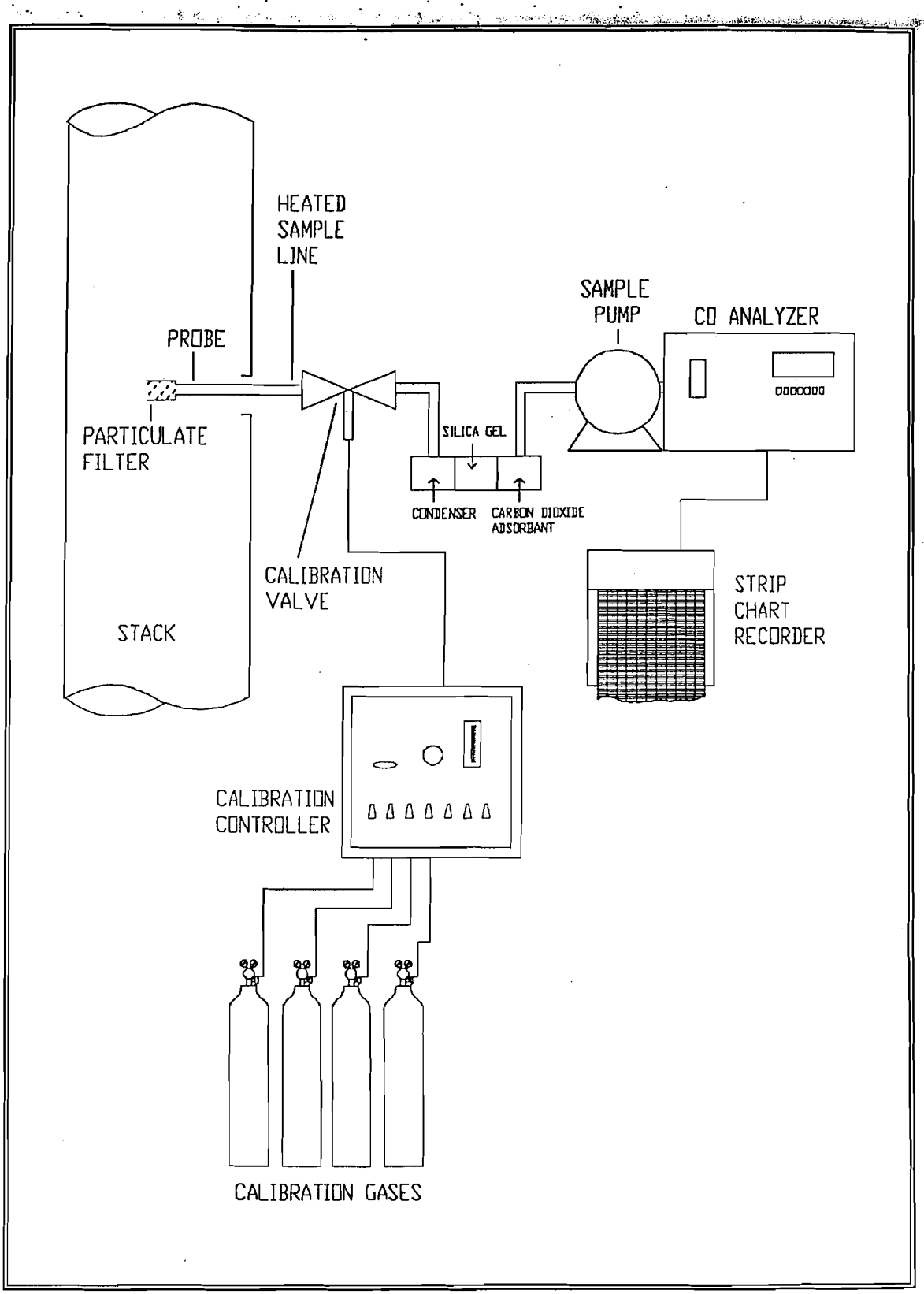

EPA Method 10 Sampling Train

Figure 4

4.5 Sample Recovery

A post test leak check of the particulate sampling train was performed at the completion of each run by sealing the nozzle and applying a vacuum equal to or greater than the maximum value reached during the sample period. A leak rate of less than 0.02 CFM or 4 percent of the average sampling rate (whichever was less) was considered acceptable. The nozzle and probe were brushed and rinsed with reagent grade acetone and the washings were placed in clean polyethylene containers and sealed. The glass fiber filter was removed from the holder with forceps and placed in a covered petri dish for return to the laboratory. The front half of the filter holder was rinsed with acetone and the washings were added to the nozzle and probe wash. The contents of the first three impingers were measured volumetrically and the silica gel in the fourth impinger was weighed to the nearest 0.1 gram for determination of moisture content.

Two calculations of the moisture content of the stack gas were made for each run, one from the impinger analysis and one from the assumption of saturated conditions based upon the average stack gas temperature and a psychrometric chart as described in EPA Method 4 - Determination of Moisture Content in Stack Gases, 40 CFR 60, Appendix A. The lower of the two values of moisture content was considered to be correct.

5.0 ANALYTICAL PROCEDURE

5.1 Pretest Preparation

The glass fiber filters for the particulate train were numbered, oven dried at 105° C for three hours, desiccated and weighed to a constant weight in preparation for the test. Results were recorded to the nearest 0.1 milligram. Filters were loaded into holders and a filter was set aside as a control blank. The impingers were charged as described in section 4.3 and the contents of the fourth impinger were weighed to the nearest 0.1 gram.

5.2 Analysis

Upon return to the laboratory, the particulate filters were removed from the containers with forceps, dried at 105° C for three hours, desiccated and weighed to a constant weight. Results were recorded to the nearest 0.1 milligram. The probe and nozzle washes and an acetone blank were measured volumetrically and transferred to clean, tared evaporating dishes and evaporated to dryness over low heat. The evaporating dishes were then oven dried at 105° C for three hours, desiccated and weighed to a constant weight. Results were recorded to the nearest 0.1 milligram. The total particulate reported is the sum of the filter weight gain and the weight gain of the evaporating dishes, corrected for the acetone blank.

APPENDIX

Project Participants

Certification

Visible Emissions Evaluation

Process Weight Statement

Laboratory Data

Gas Analysis Data Forms

Field Data Sheets

Calibration Data

Calculations and Symbols

PROJECT PARTICIPANTS AND CERTIFICATION

SOUTHEASTERN CREMATORY/FAMILY FUNERAL CARE
Human Crematory Unit B
Hudson, Florida

November 3, 1999

Project Participants:

Byron E. Nelson Kenneth M. Roberts Sean P. McGinnis	Conducted the field testing.
Kenneth M. Roberts	Performed visible emissions evaluation.
Dale Walter (IEE)	Provided process rates.
Sean P. McGinnis	Performed laboratory analysis.
Kenneth M. Roberts	Prepared the final test report.

Certification:

I certify that to my knowledge all data submitted in this report is true and correct.

Byron E. Nelson, CIH

SOUTHERN ENVIRONMENTAL SCIENCES, INC.

1204 North Wheeler Street, Plant City, Florida 33566 (813)752-5014

VISIBLE EMISSIONS EVALUATION

COMPANY Southeastern Crematory / Family Funeral Care	
UNIT Crematory Unit B	
ADDRESS 13011 US19	
Hudson, FL	
PERMIT NO.	COMPLIANCE? YES ☑ NO ☐
AIRS NO.	EU NO.
PROCESS RATE body+cont. 170lb	PERMITTED RATE Adult size body
PROCESS EQUIPMENT IE43-PPII Crematory	
CONTROL EQUIPMENT 1600° Afterburner	
OPERATING MODE Natural Gas	AMBIENT TEMP. (°F) START 70 STOP 70
HEIGHT ABOVE GROUND LEVEL START ~20' STOP ✓	HEIGHT REL. TO OBSERVER START ~20' STOP ✓
DISTANCE FROM OBSERVER START ~75' STOP ✓	DIRECTION FROM OBSERVER START 28° STOP 32
EMISSION COLOR None	PLUME TYPE NA CONTIN. ☐ INTERMITTENT ☐
WATER DROPLETS PRESENT NO ☑ YES ☐	IS WATER DROPLET PLUME NA ATTACHED ☐ DETACHED ☐
POINT IN THE PLUME AT WHICH OPACITY WAS DETERMINED START Stack Exit STOP ✓	
DESCRIBE BACKGROUND START Sky STOP ✓	
BACKGROUND COLOR START Blue STOP ✓	SKY CONDITIONS START Clear STOP ✓
WIND SPEED (MPH) START 5-18 STOP ✓	WIND DIRECTION START North STOP ✓
AVERAGE OPACITY FOR HIGHEST PERIOD 0%	RANGE OF OPAC. READINGS MIN. 0% MAX. 0%

SOURCE LAYOUT SKETCH — DRAW NORTH ARROW

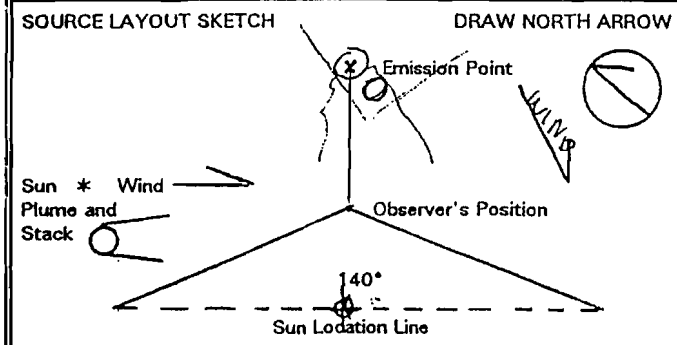

COMMENTS

OBSERVATION DATE	START TIME	STOP TIME
11/3/99	1410	1510

SEC / MIN	0	15	30	45	SEC / MIN	0	15	30	45
0	0	0	0	0	30	0	0	0	0
1	0	0	0	0	31	0	0	0	0
2	0	0	0	0	32	0	0	0	0
3	0	0	0	0	33	0	0	0	0
4	0	0	0	0	34	0	0	0	0
5	0	0	0	0	35	0	0	0	0
6	0	0	0	0	36	0	0	0	0
7	0	0	0	0	37	0	0	0	0
8	0	0	0	0	38	0	0	0	0
9	0	0	0	0	39	0	0	0	0
10	0	0	0	0	40	0	0	0	0
11	0	0	0	0	41	0	0	0	0
12	0	0	0	0	42	0	0	0	0
13	0	0	0	0	43	0	0	0	0
14	0	0	0	0	44	0	0	0	0
15	0	0	0	0	45	0	0	0	0
16	0	0	0	0	46	0	0	0	0
17	0	0	0	0	47	0	0	0	0
18	0	0	0	0	48	0	0	0	0
19	0	0	0	0	49	0	0	0	0
20	0	0	0	0	50	0	0	0	0
21	0	0	0	0	51	0	0	0	0
22	0	0	0	0	52	0	0	0	0
23	0	0	0	0	53	0	0	0	0
24	0	0	0	0	54	0	0	0	0
25	0	0	0	0	55	0	0	0	0
26	0	0	0	0	56	0	0	0	0
27	0	0	0	0	57	0	0	0	0
28	0	0	0	0	58	0	0	0	0
29	0	0	0	0	59	0	0	0	0

Observer: Kenneth Roberts

Certified by: FDEP Certified at: Orlando

Date Certified: 8/19/99 Exp. Date: 2/18/2000

I certify that all data provided to the person conducting the test was true and correct to the best of my knowledge:

Signature: See Process Weight

Title: statement

HONEYWELL
24001560-000
FT. WASHINGTON, PA.
0 TO 2400 °F K T/C
NOON
1PM
2PM
3PM
4PM
5PM
6PM
7PM
8PM
9PM
10PM
11PM
MIDNIGHT
1AM
2AM
3AM
4AM
5AM
6AM
7AM
8AM
9AM
10AM
11AM
500
1000
1500
2000
Start
Stack test 11-3-55

PROCESS WEIGHT STATEMENT

DATE 11/3/99 SAMPLING TIME : FROM 10:43 A.M. TO 5:50 P.M.

STATEMENT OF PROCESS WEIGHT

COMPANY:	Southeastern Crematory / Family Funeral Care
MAILING ADDRESS	
SOURCE IDENTIFICATION	Human Crematory Unit B
SOURCE LOCATION	Hudson, Florida

DATA ON OPERATING CYCLE TIME

START OF OPERATION, TIME		
END OF OPERATION, TIME		
ELAPSED TIME		
IDLE TIME DURING CYCLE		
DESIGN PROCESS RATING	PROCESS WEIGHT RATE (INPUT)	
	PRODUCT (OUTPUT)	

DATA ON ACTUAL PROCESS RATE DURING OPERATION CYCLE

MATERIAL	Human Remains / WOODEN CASKET	RATE	Run1 275lb 225 +50
MATERIAL	Human Remains / cardboard	RATE	Run2 170lb 160 +10
MATERIAL	Human Remains / cardboard	RATE	Run3 220lb 210 +10
	AVERAGE PROCESS WEIGHT	RATE	
PRODUCT		RATE	
PRODUCT		RATE	
PRODUCT		RATE	

I certify that the above information is true and correct to the best of my knowledge.

Name (PLEASE PRINT) Dale E Walter

Signature Dale E Walter

Title

SOUTHERN ENVIRONMENTAL SCIENCES, INC.

PARTICULATE MATTER COLLECTED

Plant: SOUTHEASTERN CREMATORY/FAMILY FUNERAL CARE
Unit No. Human Crematory, Unit B
Test Date: 11/03/99 Analyzed by:

Acetone blank container no.	18	Filter blank no.	5435
Acetone blank volume, ml.,(Va)	150	Filter blank tare weight, g.	0.3420
Acetone blank final weight, g.	105.6502	Filter blank final weight, g.	0.3419
Acetone blank tare weight, g.	105.6497	Filter weight diff., g.	-0.0001
Acetone blank weight diff.,g.,(ma)	0.0005		

Run No.	1
Filter No.	5425
Liquid lost during transport, ml.	0
Acetone wash container no.	1w
Acetone wash volume, ml. (Vaw)	150
Acetone wash residue, g. (Wa)	0.0005

Container Number	WEIGHT OF PARTICULATE COLLECTED		
	Final Weight	Tare Weight	Weight Gain
1 (Filter)	0.3690	0.3464	0.0226
2 (Wash)	101.6147	101.6048	0.0099
		TOTAL	0.0325
		Less acetone blank, g. (Wa)	0.0005
		Weight of particulate matter, g.	0.0320

Run No.	2
Filter No.	5426
Liquid lost during transport, ml.	0
Acetone wash container no.	2d
Acetone wash volume, ml. (Vaw)	200
Acetone wash residue, g. (Wa)	0.0007

Container Number	WEIGHT OF PARTICULATE COLLECTED		
	Final Weight	Tare Weight	Weight Gain
1 (Filter)	0.3800	0.3452	0.0348
2 (Wash)	112.1367	112.1234	0.0133
		TOTAL	0.0481
		Less acetone blank, g. (Wa)	0.0007
		Weight of particulate matter, g.	0.0474

Run No.	3
Filter No.	5434
Liquid lost during transport, ml.	0
Acetone wash container no.	4
Acetone wash volume, ml. (Vaw)	200
Acetone wash residue, g. (Wa)	0.0007

Container Number	WEIGHT OF PARTICULATE COLLECTED		
	Final Weight	Tare Weight	Weight Gain
1 (Filter)	0.3934	0.3420	0.0514
2 (Wash)	103.1124	103.0957	0.0167
		TOTAL	0.0681
		Less acetone blank, g. (Wa)	0.0007
		Weight of particulate matter, g.	0.0674

SOUTHERN ENVIRONMENTAL SCIENCES, INC.

MOISTURE COLLECTED

Plant Southeastern Crematory/Family Funeral Care

Unit Human Crematory, Unit B
Date 11/3/99
Run No. 1

Impinger Number	1	2	3	4	Weighed by:
Final Weight (grams):	194.0	102.0	0	251.7	BSN
Initial Weight (grams):	100.0	100.0	0	243.9	BSN
Difference (grams):	94.0	2.0	0	7.8	
Total Condensate (grams):				103.8	

Unit Human Crematory Unit B
Date 11/3/99
Run No. 2

Impinger Number	1	2	3	4	Weighed by:
Final Weight (grams):	180.0	102.0	0	246.4	BSN
Initial Weight (grams):	100.0	100.0	0	240.8	BSN
Difference (grams):	80	2.0	0	5.6	
Total Condensate (grams):				87.6	

Unit Human Crematory Unit B
Date 11/3/99
Run No. 3

Impinger Number	1	2	3	4	Weighed by:
Final Weight (grams):	196.0	103.0	0	247.0	BSN
Initial Weight (grams):	100.0	100.0	0	242.2	BSN
Difference (grams):	96.0	3.0	0	4.8	
Total Condensate (grams):				103.8	

SOUTHERN ENVIRONMENTAL SCIENCES, INC.

FIELD DATA SHEET

Company: Southeastern Crematory/Family Funeral Care
Source: Human Crematory Unit B
Operator(s): B. Nelson/S. McGinnis

Run Number: 1
Date: 11/3/99
24 hr Time at Start: 1043
24 hr Time at End: 1146
Filter No(s).: 5425
Barometric Press. ("Hg): 30.24
Elev.Diff. Mano. to Barom. (ft): 0
Ambient Temperature (°F): 55

Dimensions Dia.☒
L x W☐: 20"
Stack Static Press. ("H_2O): -0.035
Meter Box No.: 001
Meter ΔH@: 1.543
Meter Correction Factor: 1.015
Pitot Cp: 0.84
Nozzle ID: .6 Qtz
Nozzle Dia. (inches): 0.601
Probe Length/Liner: 3'/Qtz

Assumptions:

% Moisture	15	15
Stack Temp.	1100	1150
Meter Temp.	75	90
Md/Ms	1.06	1.06
K Factor	30.77	30.65

Sample Train Leak Check:

Initial 0.010 CFM@ 15 "Hg
Final 0.008 CFM@ 7.0 "Hg
Initial Pitot Tube (-) ✓ (+) ✓
Final Pitot Tube (-) ✓ (+) ✓

Point No.	Sample Time (min.)	Meter Vol. Vm (ft^3)	Velocity Head, ΔP ("H_2O)	Orifice Diff., ΔH ("H_2O)	Stack Temp., Ts (°F)	Meter Temp., Tm (°F)	Hot Box Temp. (°F)	Exit Temp. (°F)	Pump Vacuum ("Hg)	Other
1	0	236.741	.015	.46	992	64	253	50	2.0	
2	2.5	237.82	.025	.77	1062	56	254	46	3.0	
3	5.0	239.07	.025	.77	1082	67	257	45	3.0	
4	7.5	240.31	.030	.92	1098	68	260	45	3.5	
5	10.0	241.66	.030	.92	1134	70	259	45	3.5	
6	12.5	243.14	.035	1.08	1167	74	261	46	4.0	
7	15.0	244.67	.035	1.08	1189	77	263	47	4.0	
8	17.5	246.40	.035	1.08	1192	79	265	48	4.0	
9	20.0	247.89	.035	1.08	1180	81	264	48	4.0	
10	22.5	249.37	.030	.92	1138	84	264	49	4.0	
11	25.0	250.65	.030	.92	1120	86	263	49	4.0	
12	27.5	252.20	.025	.77	1068	87	262	49	3.5	
13	30.0	253.47	.030	.92	1099	87	255	50	4.5	
14	32.5	254.87	.030	.92	1188	89	252	50	4.5	
15	35.0	256.32	.035	1.08	1148	91	254	49	5.5	
16	37.5	257.91	.035	1.08	1155	91	257	49	5.5	
17	40.0	259.47	.030	.92	1162	92	262	50	5.5	
18	42.5	260.99	.035	1.08	1171	93	264	51	6.0	
19	45.0	262.53	.035	1.07	1172	93	267	52	6.0	
20	47.5	264.06	.030	.92	1165	93	265	52	5.5	
21	50.0	265.59	.030	.92	1150	93	264	52	5.5	
22	52.5	267.25	.030	.92	1135	93	263	53	5.5	
23	55.0	268.60	.030	.92	1097	93	262	53	5.5	
24	57.5	270.15	.030	.92	1052	94	259	53	6.0	
	60.0	271.452								

SOUTHERN ENVIRONMENTAL SCIENCES, INC.

FIELD DATA SHEET

Company: Southeastern Crematory/Family Funeral Care
Source: Human Crematory Unit B
Operator(s): B. Nelson/S. McGinnis

Run Number: 2
Date: 11/3/99
24 hr Time at Start: 1410
24 hr Time at End: 1512
Filter No(s).: 5426
Barometric Press. ("Hg): 30.14
Elev.Diff. Mano. to Barom. (ft): 0
Ambient Temperature (°F): 70

Dimensions Dia.☒ / L x W☐: 20"
Stack Static Press. ("H_2O): -0.025
Meter Box No.: 001
Meter ΔH@: 1.543
Meter Correction Factor: 1.015
Pitot Cp: 0.84
Nozzle ID: .160 Qtz
Nozzle Dia. (inches): 0.601
Probe Length/Liner: 3'/Qtz

Assumptions:
% Moisture: 13
Stack Temp.: 1100
Meter Temp.: 95
Md/Ms: 1.05
K Factor: 33.13

Sample Train Leak Check:
Initial 0.004 CFM@ 15 "Hg
Final 0.004 CFM@ 8 "Hg
Initial Pitot Tube (-) ✓ (+) ✓
Final Pitot Tube (-) ✓ (+) ✓

Point No.	Sample Time (min.)	Meter Vol. Vm (ft^3)	Velocity Head, ΔP ("H_2O)	Orifice Diff., ΔH ("H_2O)	Stack Temp., Ts (°F)	Meter Temp., Tm (°F)	Hot Box Temp. (°F)	Exit Temp. (°F)	Pump Vacuum ("Hg)	Other
1	0	273.184	.025	.83	1084	74	255	62	3.0	
2	2.5	274.61	.025	.83	1154	75	259	57	3.0	
3	5.0	276.00	.025	.83	1176	75	264	53	3.0	
4	7.5	277.36	.025	.83	1202	77	268	52	3.0	
5	10.0	278.72	.030	.99	1217	79	265	52	3.5	
6	12.5	281.22	.030	.99	1225	80	263	52	4.0	
7	15.0	281.72	.025	.83	1225	82	265	52	3.5	
8	17.5	283.09	.025	.83	1222	83	265	53	3.5	
9	20.0	284.48	.025	.83	1198	85	266	53	3.5	
10	22.5	286.00	.020	.66	1150	87	265	53	3.0	
11	25.0	287.16	.025	.83	1148	89	265	53	3.5	
12	27.5	288.51	.020	.66	950	90	264	53	3.0	
13	30.0	289.77	.025	.83	1095	91	262	55	3.5	
14 2	32.5	291.13	.025	.83	1147	94	263	54	4.0	
15	35.0	292.54	.025	.83	1146	96	264	53	4.0	
16 4	37.5	293.96	.020	.66	1158	98	266	53	3.0	
17	40.0	295.24	.025	.83	1160	100	267	53	3.5	
18 6	42.5	296.55	.025	.83	1167	102	268	53	4.0	
19	45.0	297.95	.020	.66	1176	104	270	54	3.5	
20 8	47.5	299.22	.020	.66	1180	106	269	54	3.5	
21	50.0	300.50	.020	.66	1161	107	267	54	3.5	
22 10	52.5	301.78	.020	.66	1144	108	265	54	4.0	
23	55.0	303.05	.015	.50	1035	107	263	54	3.5	
24 12	57.5	304.19	.015	.50	965	105	261	55	3.0	

SOUTHERN ENVIRONMENTAL SCIENCES, INC.

FIELD DATA SHEET

Company: Southeastern Crematory/Family Funeral Care
Source: Human Crematory Unit B
Operator(s): B. Nelson / S. McGinnis

Run Number: 3
Date: 11/3/99
24 hr Time at Start: 1647
24 hr Time at End: 1750
Filter No(s).: 5434
Barometric Press. ("Hg): 30.17
Elev.Diff. Mano. to Barom. (ft): 0
Ambient Temperature (°F): 70

Dimensions Dia.⌀:
L x W□: 20"
Stack Static Press. ("H_2O): -0.025
Meter Box No.: 001
Meter ΔH@: 1.543
Meter Correction Factor: 1.015
Pitot Cp: 0.84
Nozzle ID: .6 Qtz
Nozzle Dia. (inches): 0.601
Probe Length/Liner: 3' / Qtz

Assumptions:
% Moisture: 13
Stack Temp.: 1150
Meter Temp.: 90
Md/Ms: 1.05
K Factor: 32.10

Sample Train Leak Check:
Initial 0.004 CFM@ 15 "Hg
Final 0.001 CFM@ 5 "Hg
Initial Pitot Tube (-) ✓ (+) ✓
Final Pitot Tube (-) ✓ (+) ✓

Point No.	Sample Time (min.)	Meter Vol. Vm (ft^3)	Velocity Head, ΔP ("H_2O)	Orifice Diff., ΔH ("H_2O)	Stack Temp., Ts (°F)	Meter Temp., Tm (°F)	Hot Box Temp. (°F)	Exit Temp. (°F)	Pump Vacuum ("Hg)	Other
1	0	306.422	.025	.80	1075	75	239	64	3.0	
2	2.5	307.78	.025	.80	1100	75	243	58	3.0	
3	5.0	309.12	.025	.80	1135	76	243	55	3.0	
4	7.5	310.45	.025	.80	1172	78	246	53	3.0	
5	10.0	311.77	.025	.80	1182	80	249	53	3.0	
6	12.5	313.08	.025	.80	1193	81	252	53	3.0	
7	15.0	314.45	.030	.96	1222	84	260	53	4.0	
8	17.5	316.00	.030	.96	1236	87	265	53	3.5	
9	20.0	317.38	.025	.80	1205	89	268	53	3.5	
10	22.5	318.76	.025	.80	1210	91	268	53	3.5	
11	25.0	320.03	.020	.64	1150	93	269	53	3.5	
12	27.5	321.40	.015	.48	1090	95	269	53	3.5	
13	30.0	322.64	.020	.64	1113	96	265	56	3.5	
14	32.5	323.92	.020	.64	1151	98	262	54	3.5	
15	35.0	325.20	.020	.64	1151	99	260	54	3.5	
16 4	37.5	326.34	.020	.64	1158	100	259	53	3.5	
17	40.0	327.59	.020	.64	1168	99	259	53	3.5	
18 6	42.5	328.90	.020	.64	1163	98	258	53	3.5	
19	45.0	330.09	.020	.64	1167	97	260	53	4.0	
20 8	47.5	331.36	.020	.64	1171	97	261	53	4.0	
21	50.0	332.53	.015	.48	1179	96	261	53	3.5	
22 10	52.5	333.67	.015	.48	1123	95	261	53	3.5	
23	55.0	334.81	.020	.64	1040	95	259	53	4.5	
24 12	57.5	336.10	.020	.64	943	94	257	53	4.5	
	60.0	337.388								

SOUTHERN ENVIRONMENTAL SCIENCES, INC.

GAS ANALYSIS DATA FORM

Plant Southeastern Crematory / Family Funeral Care	
Unit Crematory Unit B	Test No. 1
Date 11/2/99	Sampling Location Stack
Sampling Time (24-hr Clock) 1043 – 1143	
Sample Type: Continuous ☐ Integrated Bag ☒	Grab ☐
Analytical Method ORSAT	Ambient Temperature 60°F
Operator K. Roberts	

RUN →	1		2		3		Average Net Volume	Multiplier	Molecular Weight of Stack Gas (Dry Basis) (Md)
GAS ↓	Actual Reading	Net	Actual Reading	Net	Actual Reading	Net			
CO_2	7.6	7.6	7.6	7.6	7.5	7.5	7.6	.44	3.344
O_2 (NET IS ACTUAL O_2 READING MINUS ACTUAL CO_2 READING)	17.9	10.3	17.9	10.3	17.9	10.4	10.3	.32	3.296
CO (NET IS ACTUAL CO READING MINUS ACTUAL O_2 READING)							82.1	.28	22.988
N_2 (NET IS 100 MINUS ACTUAL CO READING)								.28	
								TOTAL	29.628

SOUTHERN ENVIRONMENTAL SCIENCES, INC.

GAS ANALYSIS DATA FORM

Plant Southeastern Crematory / Family Funeral Care	
Unit Crematory Unit B	Test No. 2
Date 11/3/99	Sampling Location Stack
Sampling Time (24-hr Clock) 1410-1510	
Sample Type: Continuous ☐ Integrated Bag ☑	Grab ☐
Analytical Method ORSAT	Ambient Temperature 65°F
Operator K. Roberts	

RUN →	1		2		3		Average Net Volume	Multiplier	Molecular Weight of Stack Gas (Dry Basis) (Md)
GAS ↓	Actual Reading	Net	Actual Reading	Net	Actual Reading	Net			
CO_2	7.0	7.0	7.0	7.0	7.0	7.0	7.0	.44	3.08
O_2 (NET IS ACTUAL O_2 READING MINUS ACTUAL CO_2 READING)	17.2	10.2	17.2	10.2	17.2	10.2	10.2	.32	3.264
CO (NET IS ACTUAL CO READING MINUS ACTUAL O_2 READING)							82.8	.28	23.184
N_2 (NET IS 100 MINUS ACTUAL CO READING)								.28	
								TOTAL	29.528

SOUTHERN ENVIRONMENTAL SCIENCES, INC.

GAS ANALYSIS DATA FORM

Plant Southeastern Crematory / Family Funeral Care	
Unit Crematory Unit B	Test No. 3
Date 11/3/99	Sampling Location Stack
Sampling Time (24-hr Clock) 1647 – 1747	
Sample Type: Continuous ☐ Integrated Bag ☒	Grab ☐
Analytical Method ORSAT	Ambient Temperature 70°F
Operator K. Roberts	

RUN →	1		2		3		Average Net Volume	Multiplier	Molecular Weight of Stack Gas (Dry Basis) (Md)
GAS ↓	Actual Reading	Net	Actual Reading	Net	Actual Reading	Net			
CO_2	7.4	7.4	7.4	7.4	7.4	7.4	7.4	.44	3.256
O_2 (NET IS ACTUAL O_2 READING MINUS ACTUAL CO_2 READING)	17.4	10.0	17.4	10.0	17.4	10.0	10.0	.32	3.2
CO (NET IS ACTUAL CO READING MINUS ACTUAL O_2 READING)							82.6	.28	23.128
N_2 (NET IS 100 MINUS ACTUAL CO READING)								.28	
								TOTAL	29.584

Southeastern Crematory/Family Funeral Care
Human Crematory Unit B
11/3/99
Carbon Monoxide
0- 200 PPM scale, 6 cm/hr chart speed
Page 1 of 2

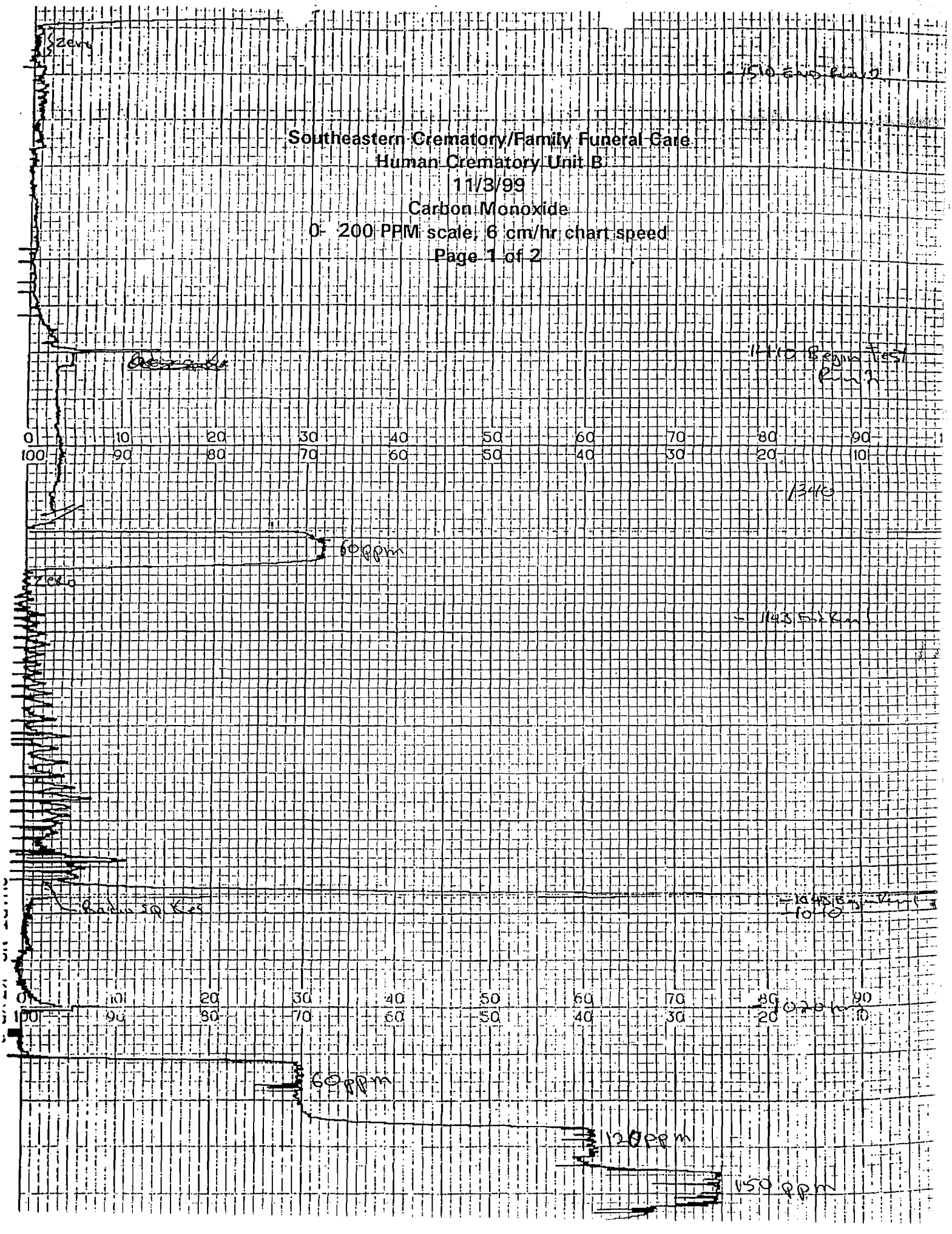

Southeastern Crematory/Family Funeral Care
Human Crematory Unit B
11/3/99
Carbon Monoxide
0- 200 PPM scale, 6 cm/hr chart speed

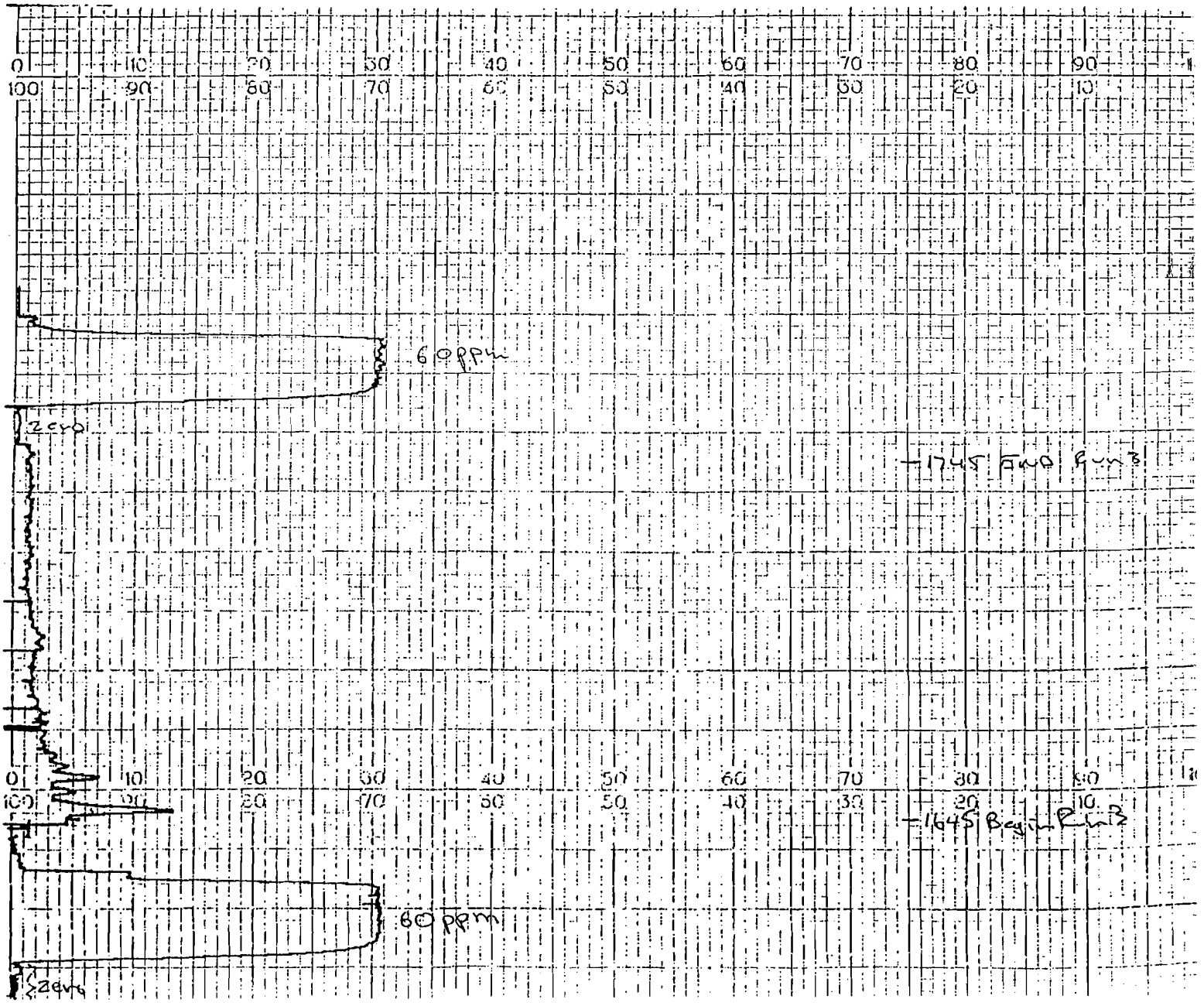

SOUTHERN ENVIRONMENTAL SCIENCES, INC.

Dry Gas Meter Calibration

Meter Box Number : 001 Barometric Pressure: 30.12
Date: 11/24/98 Wet Test Meter # : P-576

Orifice Manometer Setting (DELTA H) in. H2O	Gas Volume		Temperature		Time (Theta) min	Yi	Delta H@i in. H2O
	Wet Test Meter (Vw) ft.^3	Dry Gas Meter (Vd) ft.^3	Wet Test Meter (Tw) Deg F	Dry Gas Meter (Td) Deg F			
0.50	5.000	5.055	73.0	83.0	11.73	1.006	1.515
1.00	5.000	5.092	73.0	87.5	8.47	1.006	1.567
1.50	10.000	10.142	73.0	87.5	13.68	1.009	1.533
2.00	10.000	9.862	74.0	81.0	11.80	1.022	1.545
3.00	10.000	9.978	73.0	87.0	9.68	1.021	1.537
4.00	10.000	10.040	73.0	93.5	8.50	1.024	1.561
						1.015	**1.543**

Delta H@	Acceptable Range	1.743	to	1.343
Yi	Acceptable Range	1.035	to	0.995

$$Yi = \frac{Vw\ Pb\ (td + 460)}{Vd\ (Pb + Delta\ H/13.6)\ (Tw + 460)}$$

$$Delta\ H@ = \frac{.0317\ (Delta\ H)}{Pb\ (td+460)} \quad [(tw+460)\ (theta)\ /\ Vw]^2$$

where:

Vw= Gas Volume passing through the std test meter, ft.^3.

Vd = Gas Volume passing through the dry gas meter, ft^3

Tw = Temperature of the gas in the std test meter, deg. F.

Td = Average temperature of the gas in the dry gas meter, Deg F.

Delta H = Pressure differential across orifice, in. H20.

Yi = Ratio of accuracy of std test meter to dry gas meter for each run.

Y = Average ratio of accuracy of std test meter to dry gas meter.

Pb = Barometric pressure, in. Hg.

SOUTHERN ENVIRONMENTAL SCIENCES, INC.

POSTTEST DRY GAS METER CALIBRATION FORM

Meter Box Number: 001 Wet Test Meter #: P-576
Date: 11/15/99 Pretest Y: 1.015
Barometric Pressure: 29.90

Orifice Manometer setting (Delta H) in. H2O	Gas volume		Temperature		Time (Theta) min	Vacuum Setting in. Hg	Yi
	Wet Test Meter (Vw) ft.^3	Dry Gas Meter (Vd) ft.^3	Wet Test Meter (Tw) Deg F	Dry Gas Meter (Td) Deg F			
2.00	10.000	10.633	74.00	92.50	12.32	10.00	0.968
2.00	10.000	10.648	74.50	96.00	12.31	10.00	0.972
2.00	10.000	10.679	75.50	98.00	12.32	10.00	0.971
						Average	0.970

Acceptable Limits 0.964 to 1.07

$$Yi = \frac{Vw\ Pb\ (td + 460)}{Vd\ (Pb + Delta\ H/13.6)\ (Tw + 460)}$$

Where:

Vw = Gas Volume passing through the wet test meter, ft.^3.
Vd = Gas volume passing through the dry gas meter, ft^3.
Tw = Temperature of the gas in the wet test meter, deg F.
Tdi = Temperature of the inlet gas of the dry gas meter, Deg F.
Tdo = Temperature of the outlet gas of the dry gas meter, Deg F.
Td = Average temperature of the gas in the dry gas meter, Deg F.
Delta H = Pressure differential across orifice, in. H2O.
Yi = Ratio of accuracy of wet test meter to dry gas meter for each run.
Y = Average ratio of accuracy of wet test meter to dry gas meter for all three runs; tolerance = pretest Y +/- 0.05Y.
Pb = Barometric pressure, in. Hg.
Theta = Time of calibration run, min.

THERMOMETER CALIBRATIONS

Ref.	Wet Test Meter		Dry Gas Meter	
deg F	Inlet deg F	Outlet deg F	Inlet deg F	Outlet deg F
73.0	n/a	72.0	n/a	74.0
Difference	n/a	-1.0	n/a	1.0

Quality Control Limits +/- 5 deg F

SOUTHERN ENVIRONMENTAL SCIENCES, INC.
NOZZLE CALIBRATION

Date: 11/3/99 by: B Nelson

Nozzle ID	Run No.	D_1 (INCHES)	D_2 (INCHES)	D_3 (INCHES)	ΔD (INCHES)	D_{AVG} (INCHES)
.6 0+2	1-3	.599	.602	.601	.003	.601

where: D_1, D_2, D_3 = Nozzle diameter measured on a different diameter (inches).
Tolerance = 0.001 inches

ΔD = Maximum difference in any two measurements (inches).
Tolerance = 0.004 inches

D_{avg} = Average of D_1, D_2, D_3

****

SAMPLE POINT LOCATIONS

Company: Southeastern Crematory

Source: Human Crematory Unit B

Date: 11/3/99

Stack/Duct Dimensions: 20"

Port Length: N/A

Points corrected for port length?
Yes ☐ No ☒

Sketch of Stack/Duct

Point No.	Distance from Duct Wall (inches)
1	0.5
2	1.3
3	2.4
4	3.5
5	5.0
6	7.1
7	12.9
8	15.0
9	16.5
10	17.6
11	18.7
12	19.5

Southern Environmental Sciences, Inc.

TYPE S PITOT TUBE INSPECTION FORM

PITOT TUBE ID NUMBER	003-Inc.
INSPECTION DATE	4/12/99
INSPECTED BY	

PITOT TUBE ASSEMBLY LEVEL?	YES	NO
PITOT TUBE OPENINGS DAMAGED?	YES (explain below)	NO

ANGLE	MEASUREMENT	LIMITS
$\alpha 1$	0°	<10°
$\alpha 2$	2°	<10°
$\beta 1$	0°	<5°
$\beta 2$	0°	<5°
γ	0°	
θ	2°	
A	.627 inches	
$z = A \sin \gamma$	.000 inches	< 1/8 inch
$w = A \sin \theta$	.022 inches	< 1/32 inch
P_A	.313 inches	
P_B	.313 inches	
D_T	.241 inches	

COMMENTS: _____

CALIBRATION REQUIRED?	YES	NO

SOUTHERN ENVIRONMENTAL SCIENCES, INC.
THERMOMETER CALIBRATIONS

Calibrated By: C. Boss Date: 05/28/99 ALL TEMPERATURES ARE IN DEGREES RANKIN

			ICE BATH			TEPID WATER			BOILING WATER			HOT OIL		
ID No.	Type	Range	STD. Temp	Therm. Temp	Deg. or % Diff.	STD. Temp	Therm. Temp	Deg. or % Diff.	STD. Temp	Therm. Temp	Deg. or % Diff.	STD. Temp	Therm. Temp	Deg. or % Diff.
2.5' PA	PT	2000	496	494	0.4%	538	536	0.4%	670	670	0.0%	825	828	0.2%
2.5' PB	PT	2000	498	498	0.0%	537	538	0.2%	672	675	0.4%	837	836	0.6%
3'P	PT	2000	496	498	0.4%	537	537	0.0%	672	676	0.6%	832	837	0.6%
3' INC	PT	2000	498	498	0.0%	536	537	0.2%	672	678	0.9%	834	828	0.7%
5'PA	PT	2000	499	503	0.8%	536	537	0.2%	672	676	0.6%	840	843	0.4%
5'PB	PT	2000	499	500	0.2%	536	536	0.0%	672	673	0.2%	840	843	0.4%
5' PC	PT	2000	498	496	0.4%	538	536	0.4%	674	672	0.3%	760	758	0.3%
5' INC	PT	2000	497	499	0.4%	537	537	0.0%	670	674	0.6%	810	816	0.7%
5' VP	PT	2000	497	501	0.8%	537	537	0.0%	670	675	0.7%	828	822	0.7%
8'PA	PT	2000	497	496	0.2%	538	536	0.4%	672	669	0.4%	820	825	0.6%
8' PB	PT	2000	498	495	0.6%	538	539	0.2%	672	669	0.4%	820	824	0.5%
10' P	PT	2000	498	494	0.8%	538	535	0.6%	674	671	0.4%	799	795	0.5%
15' BP	PT	2000	498	496	0.4%	538	535	0.6%	675	672	0.4%	802	799	0.4%
15' AP	PT	2000	498	495	0.6%	538	536	0.4%	671	668	0.4%	806	803	0.4%
SS300	PT	2000	494	496	0.4%	537	536	0.2%	670	675	0.7%	820	822	0.2%
SS301	PT	2000	494	497	0.6%	537	537	0.0%	670	674	0.6%	820	823	0.4%
SS110	BM	680	494	496	2	537	536	1	670	672	2			
I5	BM	680	493	490	3	535	532	3	670	671	1			
LAB I4	BM	680	494	494	0	534	533	1	670	670	0			
T1	PT	2000	494	496	0.4%	538	538	0.0%	670	675	0.7%	824	826	0.2%
T2	PT	2000	494	497	0.6%	537	537	0.0%	670	674	0.6%	818	823	0.6%
T3	PT	2000	494	498	0.8%	537	538	0.2%	670	675	0.7%	824	822	0.2%
T4	PT	2000	494	495	0.2%	538	538	0.0%	671	676	0.7%	824	830	0.7%
T5	PT	2000	494	496	0.4%	537	538	0.2%	670	675	0.7%	818	825	0.9%
T6	PT	2000	494	496	0.4%	537	538	0.2%	671	676	0.7%	816	820	0.5%
T7	PT	2000	494	497	0.6%	538	538	0.0%	670	675	0.7%	820	825	0.6%
T8	PT	2000	494	496	0.4%	538	539	0.2%	670	675	0.7%	822	827	0.6%
T9	PT	2000	494	497	0.6%	538	538	0.0%	672	672	0.7%	828	832	0.5%
T10	PT	2000	494	497	0.6%	538	538	0.0%	670	676	0.9%	837	841	0.5%

QUALITY CONTROL LIMITS: Impinger Thermometers +/- 2 deg, Bimetallic Thermometers (BM) +/- 5 deg, Pyrometers/Thermocouples (PT) +/- 1.5%

SOUTHERN ENVIRONMENTAL SCIENCES, INC.

1204 North Wheeler Street Plant City, Florida 33566 (813) 752-5014

INSTRUMENT CALIBRATION

TEST DATA

Date	11/03/99
Company	Southeastern Crematory/Family Funeral Home
Source	Human Crematory Unit B
Parameter	Carbon Dioxide

INSTRUMENT DATA

	MONITOR	RECORDER
Manufacture	Thermoenvironmental	Kip & Zonen
Model No	48	BD111
Serial No	48-27158-228	BD1119411740
Range (ppm)	200	6 CM/HR

CALIBRATION GAS DATA

Supplier	Air Products	Air Products	Air Products
Cylinder #	SDG162845	SG915182	SG9136062
Concentration	6000.00%	120	150
Expiration Date	07/10/2001	07/20/2001	07/20/2001

CALIBRATION

Point	Observed Conc.	Actual Conc.	Percent Diff
1	0	0	0.0
2	149	150	-0.5
3	122	120	1.0
4	59	60	-0.5

Regression Output:

Constant		-0.1864
Std Err of Y Est		1.7222
R Squared		0.9996
No. of Observations		4
Degrees of Freedom		2
X Coefficient(s)	1.0023	
Std Err of Coef.	0.0149	

KEN ROBERTS
Technician

For Technical Information Call
1-800-752-1597

Air Products

ir Products and Chemicals, Inc. * Rural Route #1, Tamaqua, PA 18252

ISO CERTIFICATION: 9002

CERTIFICATE OF ANALYSIS: EPA PROTOCOL GAS STANDARD

PERFORMED ACCORDING TO EPA TRACEABILITY PROTOCOL FOR ASSAY AND CERTIFICATION OF GASEOUS CALIBRATION STANDARDS (PROCEDURE #G1)

istomer:
PCI-LARGO
900 118TH AVENUE NORTH
ARGO FL 34643-

Order No: CSS-738247-01
Batch No: 255-0769B
PO:
Release:

Cylinder No: SG9136062BAL
Bar Code No: DHP197
Cylinder Pressure*: 2000 psig
Certification Date: 07/21/97
Expiration Date: 07/21/00

CERTIFIED CONCENTRATION		REFERENCE STANDARDS			ANALYTICAL INSTRUMENTATION			
Component	Certified Concentration	Cylinder Number	Standard Type	Standard Concentration	Instrument Make/Model	Serial Number	Last Calibration	Measurement Principal
CARBON MONOXIDE	150±0.35 PPM	SG9121007	GMIS	250.2 PPM	Hewlett Packar	2518A052	06/24/97	GC-FID
NITROGEN	Balance Gas							

STANDARD SHOULD NOT BE USED BELOW 150 PSIG

Analyst: Michael Koval /KW
Michael Koval

Approved By: K Roubik /KW
Ken Roubik

For Technical Information Call
1-800-752-1597

Air Products

ir Products and Chemicals, Inc. * Rural Route #1, Tamaqua, PA 18252

ISO CERTIFICATION: 9002

CERTIFICATE OF ANALYSIS: EPA PROTOCOL GAS STANDARD

PERFORMED ACCORDING TO EPA TRACEABILITY PROTOCOL FOR ASSAY AND CERTIFICATION OF GASEOUS CALIBRATION STANDARDS (PROCEDURE #G1)

ustomer:
APCI-LARGO
7900 118TH AVENUE NORTH
LARGO FL 34643-

Order No: CSS-738303-01
Batch No: 255-0765B
PO:
Release:

Cylinder No: SG9151826BAL
Bar Code No: DFQ300
Cylinder Pressure*: 2000 psig
Certification Date: 07/21/97
Expiration Date: 07/21/00

CERTIFIED CONCENTRATION		REFERENCE STANDARDS			ANALYTICAL INSTRUMENTATION			
Component	Certified Concentration	Cylinder Number	Standard Type	Standard Concentration	Instrument Make/Model	Serial Number	Last Calibration	Measurement Principal
CARBON MONOXIDE	120±0.35 PPM	SG9121007	GMIS	250.2 PPM	Hewlett Packar	2518A052	06/24/97	GC-FID
NITROGEN	Balance Gas							

* STANDARD SHOULD NOT BE USED BELOW 150 PSIG

Analyst: Michael Koval /KN
Michael Koval

Approved By: K Roubik /KN
Ken Roubik

AIR PRODUCTS AND CHEMICALS, INC.
7900 118TH AVENUE NORTH
LARGO, FL 33773
TELEPHONE (800) 224-2724

DATE: 07/21/98
TIME: 16:49
PAGE: 1

41

****
* CERTIFICATE OF ANALYSIS *
****

SOUTHERN ENVIRONMENTAL SCIENCES INC
MR. BYRON NELSON
1204 NORTH WHEELER STREET
PLANT CITY FL 33566-

CUSTOMER ACCOUNT : U9107
CUSTOMER ORDER NO : 0602
CUST ORD LINE/REL :
ORDER NO : CSS-990844-02
SHIPPER NUMBER : 851-C-02704

REMARKS : The information provided on this Certificate of Analysis conforms to the requirements of the Purchase Order listed above. In accordance with our internal work instruction A-3, products below are traceable to NIST.

PRIMARY GAS MIXTURE : CARBON MONOXIDE IN NITROGEN

BATCH NO	FILL\ ANALYSIS DATE	BAR CODE	CYLINDER NO	COMPONENT REQUESTED	CAS NUMBER	CONCENTRATION REQUESTED	ANALYTICAL RESULT	ANALYTICAL+ ACCURACY (+/-)	UNIT OF MEASURE	LAB MET
55-17296		Jacksonville, FL (Spec Gas)								
	07/10/98	DRA975	SG916Z845BAL	CARBON MONOXIDE	630-08-0	60	60	1%	MOLAR PPM	15
				NITROGEN	7727-37-9		Balance			

+ Analytical Accuracy may vary for mixtures containing components which present adsorption, stability, or other blending problems.

LIST OF LAB METHODS USED :
15 GRAVIMETRIC

CERTIFICATION

THIS ANALYSIS HAS BEEN PERFORMED UTILIZING APPROVED ANALYTICAL METHOD(S) AND IS CORRECT TO WITHIN THE ANALYTICAL ACCURACIES OF THIS (THESE) METHOD(S).

Nancy Brown
AUTHORIZED SIGNATURE

AIR PRODUCTS AND CHEMICALS, INC.
7900 113TH AVENUE NORTH
LARGO, FL 33773
TELEPHONE (800) 224-2724

DATE: 03/25/98
TIME: 14:22
PAGE: 1

48

CERTIFICATE OF ANALYSIS

SOUTHERN ENVIRONMENTAL SCIENCES INC
MR. BYRON NELSON
1204 NORTH WHEELER STREET
PLANT CITY FL 33566-

CUSTOMER ACCOUNT : U9107
CUSTOMER ORDER NO : 0596
ORDER NO : CSS-930556
ORDER DETAIL SEQ : 1
SHIPPER NUMBER : 851-C-99562

REMARKS : The information provided on this Certificate of Analysis conforms to the requirements of the Purchase Order listed above. In accordance with our internal work instruction A-2, products below are traceable to NIST.

PRODUCT : AIR
GRADE : UHP/ZERO

BATCH NO	FILL ANALYSIS DATE	SAR CODE	CYLINDER NO	IMPURITY	SPEC SPECIFICATION	UNIT OF MEASURE	ANAL FREQ*		ANALYTICAL RESULT	UNIT OF MEASURE	PHASE CODE
16582	03/16/98	DHJ362	E354570A	Total Hydrocarbons	0.5	PPMV	B	<	0.1	PPMV	V
				Water	3.5	PPMV	B	<	0.15	PPMV	V

* ANAL FREQ: I = CONTAMINANT INDIVIDUALLY TESTED B = CONTAMINANT BATCH TESTED S = SOURCE ANALYSIS.

CERTIFICATION

THIS ANALYSIS HAS BEEN PERFORMED UTILIZING APPROVED ANALYTICAL METHOD(S) AND IS CORRECT TO WITHIN THE ANALYTICAL ACCURACIES OF THIS (THESE) METHOD(S).

AUTHORIZED SIGNATURE

CO EMISSION TEST CALCULATIONS

COMPANY: **SOUTHEASTERN CREMATORY/FAMILY FUNERAL CARE**
SOURCE: **Human Crematory Unit B**
TEST DATE: **11/03/99**
Data analyst: **Ken Roberts**

Run No.	Average CO (ppm)	Average O2 (%)	Average CO @ 7% O2 (ppm)	Stack Flowrate (dscfm)	Emissions mg/m3	Emissions lbs/ft3	Emissions lbs/hr
1	17.9	10.3	23.4	657	20.8	1.30E-06	0.051
2	1.8	10.2	2.3	574	2.1	1.31E-07	0.005
3	5.0	10.0	6.4	545	5.8	3.63E-07	0.012
Averages	8.2	10.2	10.7	592	9.6	5.98E-07	0.023

FORMULAS: CO @ 7% O2 = Actual CO x (14/(21-%02)

mg/m3 = ppm x .041573 x molecular wt.

$$lb/ft3 = \frac{mg/m3}{35.31\ ft^3/m^3 \times 1000mg/g \times 453.59\ g/lb}$$

lb/hr = lb/ft3 x flowrate x 60 min/hr

where: Pstd = 29.92 "Hg
Tstd = 528 deg R

SOUTHERN ENVIRONMENTAL SCIENCES, INC.

EMISSIONS TEST CALCULATIONS

Plant: Southeastern Crematory/Family Funeral Care
Unit: Human Crematory Unit B
Run No: 2

Test Date: 11/03/99
Data Input By: K. Roberts

Pbar = (Pbar at barom.) - (Elev. diff. barom. to manom., ft.) x (.1/100)
= 30.19 - 0 x (0.1/100) = **30.19**

$$Pm = Pbar + \frac{Delta\ H}{13.6} = 30.19 + \frac{0.766}{13.6} = \mathbf{30.25}$$

$$Vm(std) = (Vm) \times (Y) \times \frac{(Tstd, deg\ R) \times (Pm)}{(Tm, deg\ R) \times (Pstd)}$$

$$= 32.093 \times 1.015 \times \frac{528 \times 30.25}{551.4 \times 29.92} = \mathbf{31.531}$$

Vw(std) = Vlc x (.04715) = 87.6 x 0.04715 = **4.130**

$$Bws = \frac{Vw(std)}{Vw(std) + Vm(std)} = \frac{4.130}{4.130 + 31.531} = \mathbf{0.116}$$

Bws @ saturation = **0.99**
1 - Bws = **0.884** USE LOWER BWS

Md = 0.44(%CO2) + .32(%O2) + .28(%N2+%CO)
= .44 x 7 + .32 x 10.2 + 0.28 78
= **assume** **29.528**

Ms = Md(1-Bws) + 18(Bws) = 29.528 * 0.884 + 18 * 0.116
= **28.19**

$$Ps = Pbar + \frac{(Pg, in.\ H2O)}{13.6} = 30.19 + \frac{-0.035}{13.6} = \mathbf{30.19}$$

Vs = 85.49 x (Cp) x (avg sqrt delta P) x sqrt[(Ts,~R)/(Ps)(Ms)]
= 85.49 x 0.84 x 0.152 x sqrt 1605.2 / 30.19 x 28.19
= **14.94**

$$An = \frac{[(Nozzle\ diam, in./12)^2 \times 3.14159]}{4} = \frac{[(0.601/12)^2 \times 3.14159]}{4} = \mathbf{0.002}$$

Southern Environmental Sciences, Inc.
1204 North Wheeler Street ☐ Plant City, Florida 33566-2354 ☐ (813) 752-5014

NOMENCLATURE USED IN STACK SAMPLING CALCULATIONS

A_n = Cross-sectional area of nozzle, ft^2

A_s = Cross-sectional area of stack, ft^2

B_{ws} = Water vapor in gas stream, proportion by volume

C_p = Pitot coefficient

C_s = Pollutant concentration, gr/DSCF

F_d = Ratio of gas generated to heat value of fuel, DSCF/mm BTU

ΔH = Average pressure differential across orifice, in. H_2O

%I = Isokinetic variation, %

M_d = Molecular weight of dry gas

M_n = Total amount of pollutant collected, mg

M_s = Molecular weight of stack gas

N = Normality of barium perchlorate titrant

$\sqrt{\Delta P_{avg}}$ = Average of the square roots of the velocity heads

P_{bar} = Barometric pressure at the sampling site, in. Hg

P_g = Stack gas static pressure, in. H_2O

P_m = Absolute pressure at the dry gas meter, in. Hg

P_s = Absolute stack pressure, in. Hg

PMR = Pollutant mass rate, lb/hr

P_{std} = Standard absolute pressure, 29.92 in. Hg

θ = Total sampling time, minutes

Southern Environmental Sciences, Inc.
1204 North Wheeler Street ☐ Plant City, Florida 33566-2354 ☐ (813) 752-5014

NOMENCLATURE USED IN STACK SAMPLING CALCULATIONS
(Continued)

Q = Stack gas flowrate, ACFM

Q_{std} = Stack gas flowrate, DSCFM

T_m = Absolute average meter temperature, °R

T_s = Absolute average stack gas temperature, °R

T_{std} = Standard absolute temperature, 528 °R

V_a = Volume of sample aliquot titrated, ml

V_{lc} = Liquid collected in impingers and silica gel, grams

V_m = Sample volume at meter conditions, DCF

$V_{m(std)}$ = Sample volume at standard conditions, DSCF

V_s = Stack gas velocity, ft/sec

V_{soln} = Total volume of solution, ml

V_t = Volume of barium perchlorate titrant used for the sample, ml

V_{tb} = Volume of barium perchlorate titrant used for the blank, ml

$V_{w(std)}$ = Volume of water vapor in sample corrected to standard conditions, SCF

Y = Dry gas meter calibration factor

13.6 = Specific gravity of mercury

********** -COMM. JOURNAL- ********** DATE OCT-18-1999 ***** TIME 12:00 *** P.01

MODE = MEMORY TRANSMISSION START=OCT-18 11:59 END=OCT-18 12:00

FILE NO.= 034

STN NO.	COM	ABBR NO.	STATION NAME/TEL.NO.	PAGES	DURATION
001	OK	5	18137446458	001/001	00:00'25"

********** - - ***** - - *********

INDUSTRIAL EQUIPMENT & ENGINEERING CO.

via facsimile [(813) 744 6458] and Federal Express

October 18, 1999

Mr. Andrew Thuy Nguyen
Air Compliance Engineer
Florida Department of Environmental Protection
3804 Coconut Palm Drive
Tampa, FL 33619

Re: Compliance test on crematory incinerator unit B at Southeastern Crematory / Family Funeral Care- Hudson, FL
Permit No. 1010042-003-GP

Dear Mr. Nguyen:

This letter is to serve as notification that a compliance test for particulate matter, carbon monoxide, and visible emissions is scheduled for the above source on November 3, 1999. Testing will begin at approximately 9 AM.

Southern Environmental Sciences, Inc. of Plant City, Florida will perform the testing.

Although the facility is not required to perform the testing for compliance at this time, we will be having the test performed for research purposes and would like to use the results in the future for compliance at this facility as well as other facilities with identical units.

Special attention will be given to the accuracy and reliability of the temperature recorder in order to correct the problem that arose during the previous test at this facility.

If you have any questions please do no hesitate to call me at (407) 886-5533.

Sincerely,

Dale Walter
Engineer

Federal Express Corporation
Customer Support
Domestic Trace
3976 Airways Boulevard
Module H, 4th Floor
Memphis, TN 38116

U.S. Mail: PS Box 727
Memphis, TN 38194-4643

Telephone 901-369-3600

FedEx
Federal Express

October 21,1999

Dale Walter
(407) 886-5990

Dear Dale Walter:

This is in response to your request for proof of delivery for package tracking number 815426803176. You will find the delivery information below.

SHIPMENT INFORMATION:

Billing Reference Information: 70-949004
Tracking No: 815426803176 Ship Date: October 18, 1999

Shipper: DALE WALTER
INDUSTRIAL EQUIP/ALL
CREMATORY
2045 SPRINT BLVD
APOPKA, FL 327037762

Recipient: ANDREW THUY NGUYEN
FLORIDA DEPT OF
ENVIRONMENTAL
3804 COCONUT PALM DR
TAMPA, FL 33619

DELIVERY INFORMATION:

Signed For By: J.BECK

JBeck

Delivered to: 3804 COCONUT PALM DR

Delivery Date: October 19, 1999

Delivery Time: 10:11 AM

Your business is greatly appreciated and we look forward to the opportunity of serving your future express shipping needs.

Federal Express Corporation
Worldwide Customer Service
1-800-GO-FEDEX
Reference No: R1999102100013443193

DAILY CREMATORY LOG

Date: 11/3/99 Operator: Louie

Cremation Unit: A (B) Body size: child (adult) obese

Estimated body and container weight: 275 Start time: 10:40

List any special procedures performed: —

Min. secondary chamber temperature during cremation: 1628

Cremation Unit: A (B) Body size: child (adult) obese

Estimated body and container weight: 170 Start time: 2:10

List any special procedures performed: —

Min. secondary chamber temperature during cremation: 1630

Cremation Unit: A (B) Body size: child (adult) obese

Estimated body and container weight: 220 Start time: 4:50

List any special procedures performed: —

Min. secondary chamber temperature during cremation: 1620

Describe any maintenance performed (what, why, by whom):

—