Florida Rock Industries, Inc.

Newberry, Florida

FABRIC FILTER OPERATION AND MAINTENANCE PLAN

Updated August 29, 2006

Table of Contents

1. Introduction..... 5

2. Purpose..... 5

3. Baghouse (Dust Collector) Operating Principle..... 6

4. Gas/Air Flow..... 8

5. Cleaning Cycle..... 8

6. Timer & Controls..... 9

7. Differential Pressure Switch..... 9

8. Pulse Valve..... 9

9. Compressed Air Header..... 10

10. Blow Tube..... 10

11. Initial Baghouse Start-Up..... 10

12. Baghouse Shut Down Sequence..... 11

13. Filter Bag Replacement..... 11
    - 13.1 Pulse Jet Baghouse – Bag Replacement
    - 13.2 Reverse Jet Collector – Filter Replacement

14. Weekly Baghouse Checks 15

15. Monthly Baghouse Checks..... 15

16. Quarterly and Yearly Baghouse Checks..... 15

17. Visible emissions/Opacity..... 16

18. Corrective Measures..... 17

19. Troubleshooting Quick Reference..... 18
A. Excessive Pressure Drop
B. Extremely Low Pressure Drop
C. Dusting (Dirty Exhaust Air/Visible Emissions)

List of Figures

Figure 1 ..... Pulse-Jet Baghouse Components

Figure 2 ..... Typical Bag Installation

Figure 3 ..... Bag Collar/Snap Ring

Figure 4 ..... Gage/ Venturi Assembly

Figure 5 ..... Filter Bag/Cage Installation

Attachments

Baghouse Inspection Forms..... Attachment 1

Baghouse Mapping Forms..... Attachment 2

Facility Baghouse Listing ..... Attachment 3

Maintenance Troubleshooting..... Attachment 4

Method 22 Visible Emission Forms (Pre-filled)..... Attachment 5

Visible Emission Form (Method 9)..... Attachment 6

Record of Maintenance on Air-Pollution Control Device..... Attachment 7

1. Introduction

Florida Rock Industries, Inc. (FRI) operates a limestone quarry and a cement production facility at this location. Limestone is mined /stockpiled and then mixed with other raw materials that provide an additional source of iron and aluminum, in designed proportions, to produce a ground mixture of kiln feed. The additional raw materials used will include coal ash, sand and mill scale. The kiln feed will have sufficient chemical properties to produce clinker when it is subjected to the high temperatures in the preheater stages, precalciner and rotary kiln. The clinker produced by the pyroprocess process is ground into finished cement. As the clinker is introduced into the finish (grinding) mill a small percentage of gypsum is added to produce Portland cement.

FRI is committed to operating the facility in a manner that will comply with applicable federal, state, and local environmental regulations and in harmony with the surrounding community. FRI expects to operate at this location for many years. To accomplish this, FRI has made regulatory compliance a corporate commitment. This commitment is vigorously disseminated throughout the company, from the top down.

2. Purpose

The purpose of this plan is to effectively operate and maintain baghouse; emission control systems to meet or exceed the requirements of federal state and local environmental regulations.

It is a regulatory requirement for FRI to develop and implement a baghouse Operations & Maintenance Plan (O&M Plan) to ensure the effective operation of the fabric filter emission control systems throughout the facility. The routine monitoring and maintenance of emission control units is essential for the optimum performance/capture efficiency of the units. The O&M plan will describe the measures and procedures that must be followed to ensure that the emission control units will achieve their designed operating efficiency throughout the life of the units.

The facility has several permitted point sources (emission points), the majority of which are fabric-filter dust collectors (baghouses). Baghouses are designed to capture fine dust particles in various process gas streams and potential emissions from material handling operations. Each baghouse system has been designed with sufficient cloth area, airflow and captures velocities to control emission at specific locations throughout the facility. While there are several mechanisms involved in removing dust from the gas stream, the primary removal mechanism is filtration. Particles are filtered from the gas stream by the filter fabric and a thin layer of dust is formed on the surface of the fabric. The dust that accumulates on the fabric is periodically removed or cleaned from the surface of the filter bags. Dust captured in the emission control units is returned to the process by totally enclosed conveying mechanisms.

The maintenance required for the mechanical aspects of the baghouse, and the associated material handling devices, is incorporated into the plant wide preventative maintenance (PM) program. This program has been established based on manufacturer's suggested maintenance and the process experience of FRI personnel.

3. Baghouse (Dust Collector) Operating Principle

Baghouses work on the principle of filtration and they are mechanically straight foreword in design. Conceptually, baghouses operate with a "clean side" and a "dirty side" in terms of air handling. Keep them separate and the unit will perform up to its maximum efficiency. Baghouses have a typical collection efficiency of 99+%. The dirty side of the bag is the side exposed to the incoming gas stream as it enters the unit and the clean side is the side of the bag exposed to the gas stream, as it exists the bag/unit. The filtered/clean air is discharged to the atmosphere.

As the dust-laden gas enters the unit, the gas stream slows down and a baffle causes dispersion of the particles and turbulence in the gas stream. Larger particle will settle out due to velocity reduction, impingement, and directional changes. The finer dust particles will follow the gas stream and impact on the filter bag outer surface of the bags. The primary and most efficient filtering of the gas stream is accomplished by a thin dust coating on the surface of the bag, not the bag itself. For this reason, new filter bags can initially have an excess emission or "bleed through" of sub-micron size particles even with proper start-up procedures. However, this bleed through will typically be short lived and will decrease as a dust cake is formed on the filtering surface of the bag. This thin layer of dust cake will not, and should not, be removed during the normal cleaning process. Excessive cleaning may partially remove this dust cake and cause bleed through of sub-micron size particles.

All of the baghouses in the facility are pulsejet type units (Figure 10.) Pulsejet type units clean the bags by allowing a jet of compressed air to blow through a tube (blow tube) with outlet holes that are centered above each bag in the row of bags along the tube. The jet of air enters the bag through a venturi, which increases the velocity of the air. The jet of air expands/flexes the bag, in a wave motion, down the length of the bag causing accumulated dust to be dislodged from the bag's surface. There is some additional cleaning of dust-laden surfaces caused by the sonic and ultrasonic sound produced by the jet of compressed air. The compressed air is supplied through a header attached to the blow tubes. The blow tube/header connection has a diaphragm that controls the release of compressed air into each blow tube, via a timer. The on and off time of the cleaning cycles and the duration of the pulsejet for each row of bags, is controlled by a timer and solenoids. This method of cleaning is continuous and only the row(s) being cleaned are momentarily offline.

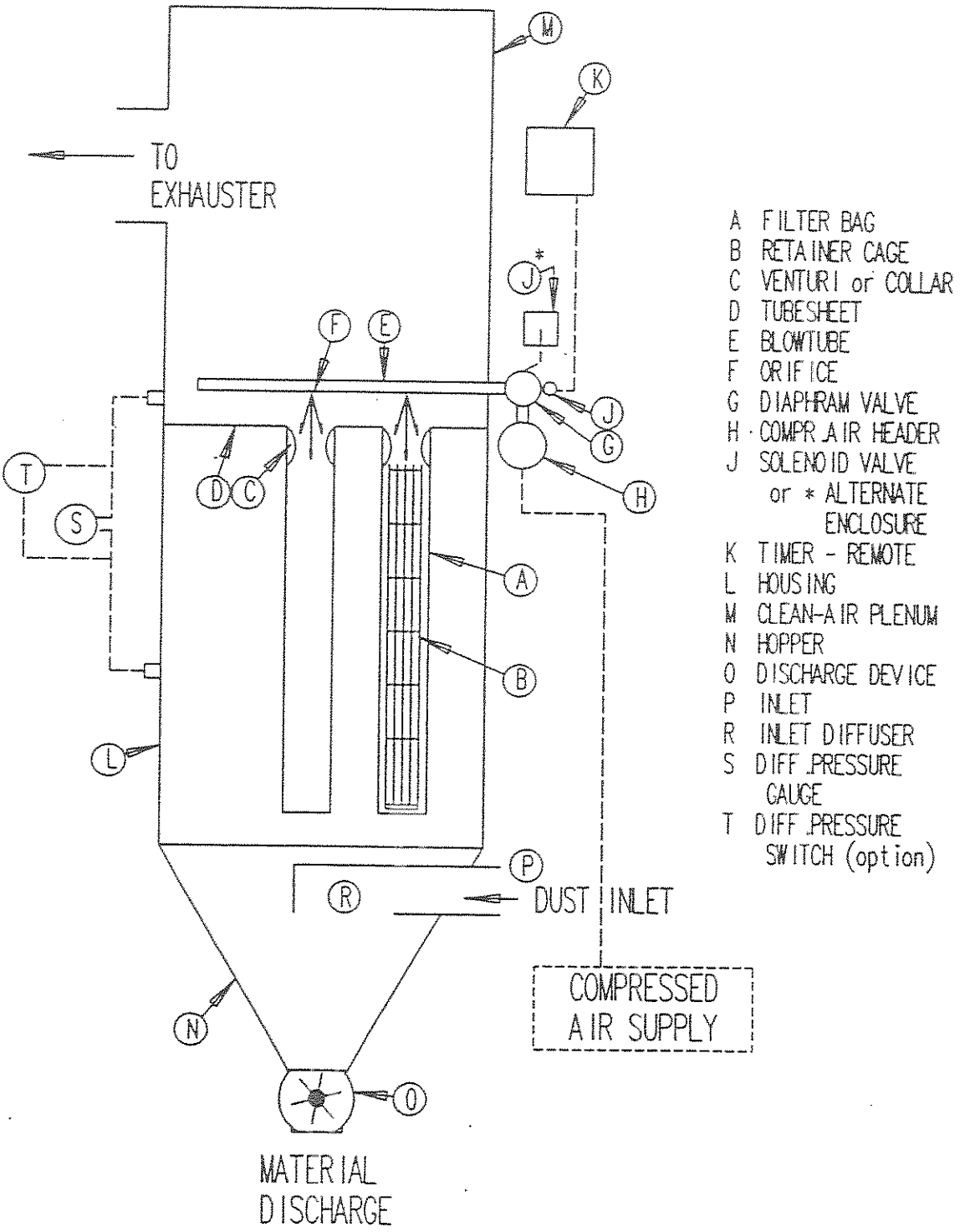

Figure 1. Pulsejet Baghouse Components

4. Gas/Air Flow

Gas/air is moved through a dust collector by either of two methods, suction or pressure. In a suction system, a fan is installed downstream of the baghouse to draw or induce gas flow through the dust collector from the ventilated source(s). In a pressure system, a fan immediately upstream of the baghouse draws air from the ventilated point(s) and forces (forced draft) the gas through the dust collector. FRI baghouses are equipped with suction or induced draft (ID) fans, where the fan is downstream of the baghouse. The ID fan system is preferable because it maintains a negative pressure (vacuum) on the entire system upstream of the fan and air will be drawn into the system at any point of potential leakage. Where the forced draft system will blow air/dust out at any point of leakage, downstream of the fan.

5. Cleaning Cycle

The cleaning cycle is very important to the effectiveness of a dust collector. If the bags of a dust collector are not periodically cleaned the dust collector will gradually lose its ability to capture emission as the airflow through the system decreases. All of the baghouses at the facility are self-cleaning, pulsejet type units. Through this self-cleaning capability, the equipment is able to operate continuously, without losing collection efficiency, because, only a row or a limited number of rows, at any given time, will be off-line during the cleaning cycle. When the cleaning cycle is initiated, the pulse valve/diaphragm on one or more rows opens to inject a short blast of compressed air through blow tubes and down into the bags from the clean airside. This pulse of compressed air sends shock wave along the length of the filter bag surfaces, flexing and expanding each bag to break loose accumulated dust on the outer surface. The duration of this pulse is extremely brief, typically less than 100 milliseconds.

The cleaning cycle will continue from row to row, preferably non-sequentially, until all rows have been cleaned. The frequency with which the cleaning cycle is repeated is a function of settings made at the timer and of the external controls connected to the timer. The row(s) out of service during the cleaning cycle will be out of service for only milliseconds. The other rows remain in operation and the filtering process continues without interruption. The total time that is required to clean a complete dust collector is dependent upon the number of rows in the baghouse and the time interval between the cleaning of each row or rows. The frequency of cleaning cycle will be a function of the system air volume, process conditions, characteristics of dust and grain loading. After the baghouse has operated, with factory setting, in its normal environment, the differential pressure gauge (Magnehelic or Photohelic) should be observed for correct pressure drop. The timer on/off setting may be adjusted as necessary to obtain the desired results. A typical range of operating pressure drop is two (2") inches to ten (10") inches across the baghouse. However, there are, many process variables that may cause the baghouse to operate out side this range and still effectively control emissions.

6. Timer, Control & Differential Pressure Gauge

The function of the timer is (1) to automatically sequence the cleaning of the rows in the dust collector, (2) to control the time-period that a pulse valve is open and (3) to control the time interval between cleaning cycles. In performing its function, the timer activates the solenoid(s), which controls a pulse valve, on a predetermined time-period. The timer can be connected to operate in either of two modes: (1) On a continuous cycling basis (standard), or (2) in conjunction with a differential pressure switch. In the first mode, the timer operates on a predefined cycle, continuously, as long as power is applied to the timer.

In the second mode, the cleaning cycle is controlled by a differential pressure switch (Photohelic), which determines when the cleaning cycles is activated and deactivated based on the pressure drop of the unit. The cleaning cycle is activated whenever the pressure drop across the dust collector exceeds a preset value (high set point) on the photohelic. The cleaning cycle will continue until the differential pressure across the baghouse is sufficiently lowered to close the contacts of the low set point. This cycle will be repeated each time the high set point contacts are closed.

The taps for the connections of either type of gauge, negative and positive, are located directly above and below the tube sheet of the baghouse. Tubing is used to connect these taps to the gauges and indicate the differential during operation. These gauges can indicate unusual differential pressure conditions, which may be the first signal of unit operational problems. The Magnehelic gauge is an indicator only; it has no capacity to control the operation of the timer/cleaning cycle.

7. Differential Pressure Switch

A differential pressure switch or gauge/switch combination device (Photohelic) is installed on two of baghouses for the coal grinding operation. The Photohelic is equipped with dual set points, a high and a low. It will automatically activate the timer to initiate a cleaning cycle whenever the differential pressure (Delta P) across the dust collector reaches high set point and activates the time/cleaning cycle and deactivate the timer when the Delta P reaches the low set point. Once activated the timer functions to clean rows of the unit until specified low-pressure differential is reached and high set point contacts open to shut off the timer. A switch of this type is normally used when the dust loading is intermittent, not heavy enough to require continuous cleaning or when the unit also functions as a material surge bin. Merrick baghouses on coal grinding system are equipped with Photohelic gauges.

8. Pulse Valve/Diaphragm

The pulse valve, of a pulsejet baghouse, introduces the blast of compressed air through the blow tube and into the clean airside of the bags to dislodge the dust from the outer surface of the bags. The timer determines on/off cycling of the valve and the duration of the pulse. The pulse valve is an internally ported diaphragm

valve. Control air acts on the larger, upper surface of the diaphragm to keep the valve closed against the air from the compressed air manifold. When the solenoid is energized, the control air on the topside of the valve is vented to the atmosphere and the force is no longer sufficient to hold the valve closed against the air acting from below. The diaphragm is forced to the open position and the air blasts through the valve into the blow tube. When the timer de-energizes the solenoid, the topside of the valve is no longer vented, so the pressure immediately increases to close the diaphragm and stop the flow of compressed air through the blow tube. The operation takes place in a fraction of a second. Solenoids that control the pulse valves are typically located in a common junction box or boxes.

9. Compressed Air Header

The function of the compressed air header is to distribute an adequate supply of compressed air to the blow tubes when the pulse valve opens. The header for each unit has been designed to be compatible, in size, with the compressed air demand for each unit and is located as close as possible to the pulse valves to minimize the pressure drop from the header to the points of use. The air header is equipped with a pressure gauge and a drain valve. Compressed air supply for the header should be relatively dry and at approximately 80 - 100 psi.

10. Blowtube

The blow tube is a length of pipe located at the discharge side of the pulse valve/air header, centered above a row of bags, with orifice holes spaced equally along the pipe the under side of the pipe at the approximate center of each bag. When the pulse valve diaphragm opens, a surge of compressed air is expelled into the blow tube and discharges through the orifice holes at high velocities. This high velocity air from each orifice sets up an induced secondary airflow as it passes through the venturi. The airflow into the bag causes a combination of an instantaneous shock wave and reverse airflow down the length of the bag releasing the collected dust. In a top-access dust collector, the blow tubes are removable to permit installation or removal of the filter bags and cages.

11. Initial Baghouse Start-Up (With New Filter Bags)

After an inspection of baghouse system has verified all bags are installed, covers, doors, access hatches are in place, the compressed air is supplied is on and the ID (induced draft) is operable; the start-up sequence may begin. The baghouse materials handling devices should be started first. Where system is equipped with dampers, inlet and or outlet, the flow should be controlled to no more than 25% of design, if practical, but no more that 50% percent open during start-up. This allows the bags to gradually build a dust cake and prevent impingement of dust particles into the fabric and excessive bleed through, due the low resistance to flow of the new bags. When Delta P across baghouse reaches one (1) to two (2) inches pressure drop, the dampers may gradually be opened to the desired position.

The use of dampers or blast gates would be the desired method of airflow reduction even if they must be installed. Furthermore, a dust collection system with multiple and/or remote pick-up points may require such devices to balance the air flow(s) for maximum capture efficiency. Obviously, this procedure would need to be completed under low process material flow/output conditions. The start-up sequence may be completed prior to process start-up by manually introducing a pre-coat material into the system immediately upstream of the baghouse inlet.

During either of the above start-up sequences, the timer should be turned off until desired pressure drop is achieved and the unit is operating at the expected flow rate. If the bags have been pre-coated, the baghouse system would not require any stepped sequence for start-up other than those associated with process/operation start -up sequence.

12. Baghouse Shutdown Sequence

The shut down sequence is the reverse of the start-up. The process/material flow should be shut down first and baghouse system is shut down last. Under a controlled shut down, when the potential for process emissions have sufficiently diminished the baghouse should be allowed to run, with the cleaning cycle turned off, for approximately one (1) hour, where the is system venting an operation that has the potential to produce a steam plum and approximately 15-minutes on other units, where practical. This will allow the system sufficient time to evacuate any moisture-laden gases that may cause condensation and possible bag damage and/or increased pressure. If a prolonged shut down period is anticipated, material-conveying devices should be emptied.

13. Filter Bag Replacement

Filter bags, in the correct application, may have a useful life of one (1) to four (4) years, depending on the chemical and physical nature on the gas stream. However, bag wear is usually gradual and through routine inspections, you must establish the expected bag life for specific baghouse units. Premature bag failure is usually attributable to either chemical attack, degradation due to high temperature, physical damage or imperfection in the bag material. Abnormal wear can be caused by a number of factors. It may be due to vary abrasive materials, excessive cleaning, or incorrect fabric type. Operating a baghouse with broken/failed bags will not only allow excess emission into the atmosphere, it will also cause abrading/failure of adjacent bags and may damage the ID fan. Once the expected bag life of each unit has been determined, through operating experience, the bags in the units can be changed out on a predetermined schedule to minimize the potential of bag failure due to age alone. Prior to a scheduled bag change out, of the entire unit, damaged or broken bags will changed/replaced as needed.

Established safety precautions should always be taken during the replacement of bags and/or baghouse entry. Precautions must be taken to minimize employee exposure to potential hazards.

13.1 Pulse Jet Baghouse – Bag Replacement

The pulsejet baghouses have top entry/access for the inspection and/or replacement of filter bags. To inspect for bag leakage or bag replacement the doors/covers at the access point of the unit must be opened or removed for access to the bags.

To remove and/or replace a bag the blow tube must be removed. When a bag is replaced, care must be taken to insure that the bag collar is properly seated in the tube sheet (see Figure 2, Top-Access) to prevent dust leaks during operation. In the pulse jet units, the edge of the opening in the tube sheet must fit firmly into the groove in the bag collar. Each bag is seated in the tube sheet by a snap ring that is sewn into the bag collar. This snap ring must be flexed inward to remove or replace a bag. The bag cage for the pulse jet units, which keeps the bag from collapsing, has a built-in venturi. The cage must be removed to replace the bag. When a bag is installed, the bag is inserted into the hole of the tub sheet and slowly fed down until the collar of the bag is at the tube sheet opening.

The new bag is flat when it is unrolled and should be folded together to minimize scraping the surface of the bag on the edges of the tube sheet opening, as you feed it into the hole. When the collar of the bag reaches the tube sheet, flex the snap ring inward to allow the collar to fit into the hole of the tube sheet, however, you should always set the seam of the bag against the tube sheet when the snap ring is flexed. The snap ring has a small grove that must mate with the edge of the tube sheet as you release the flex in the snap ring (see Figure 3). The collar of the bag must fit snugly against the entire circumference of the tub sheet opening, if not the dirty air will leak through to the clean air side/plenum. The snap ring-tube sheet interface is the dirty air seal between the baghouse interior and the clean air plenum. If the snap ring does not fit snugly against the tube sheet, (has a small bulge in the snap ring) tap on the inside surface of the snap ring with your hand or a small rubber mallet to force the snap ring against the tube sheet. After the bag(s) is installed and properly seated in the tube sheet the cage may be inserted into the bag (see Figure 4 & 5). If the cage is difficult to insert into the bag it is likely that the snap ring is not properly seated and the opening at the bag collar is too small for the cage to fit. When the cage is installed, lower the cage gently into the bag until the flange of the cage is in contact with the tube sheet.

13.2 Reverse Jet Collector – Filter Replacement

The envelope-style filter is fitted over the wire-frame and held in place with a snap ring. The filter/frame assembly is lowered and secured in the seal-frame's recessed slots.

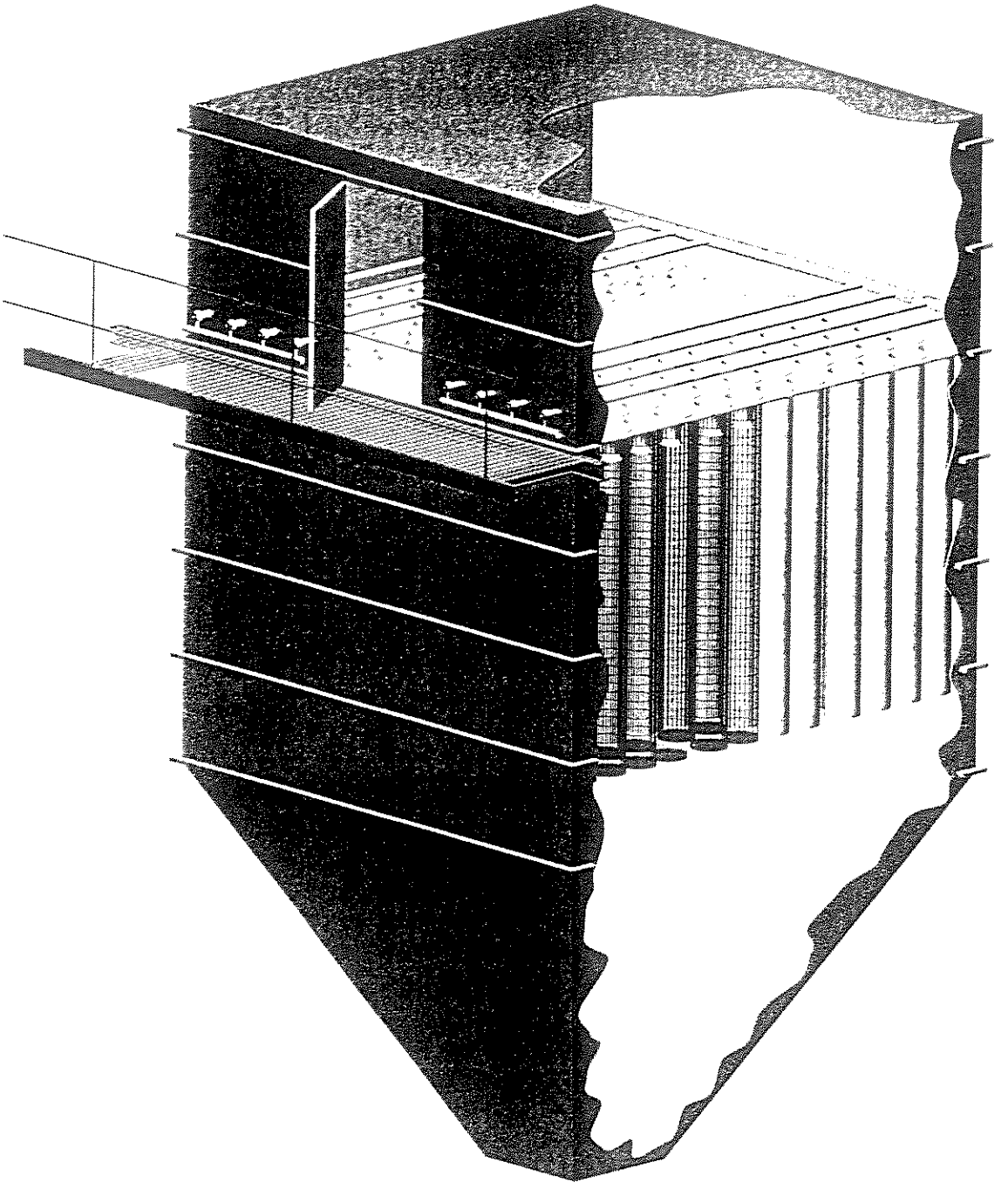

Figure 2. Typical Bag Installation

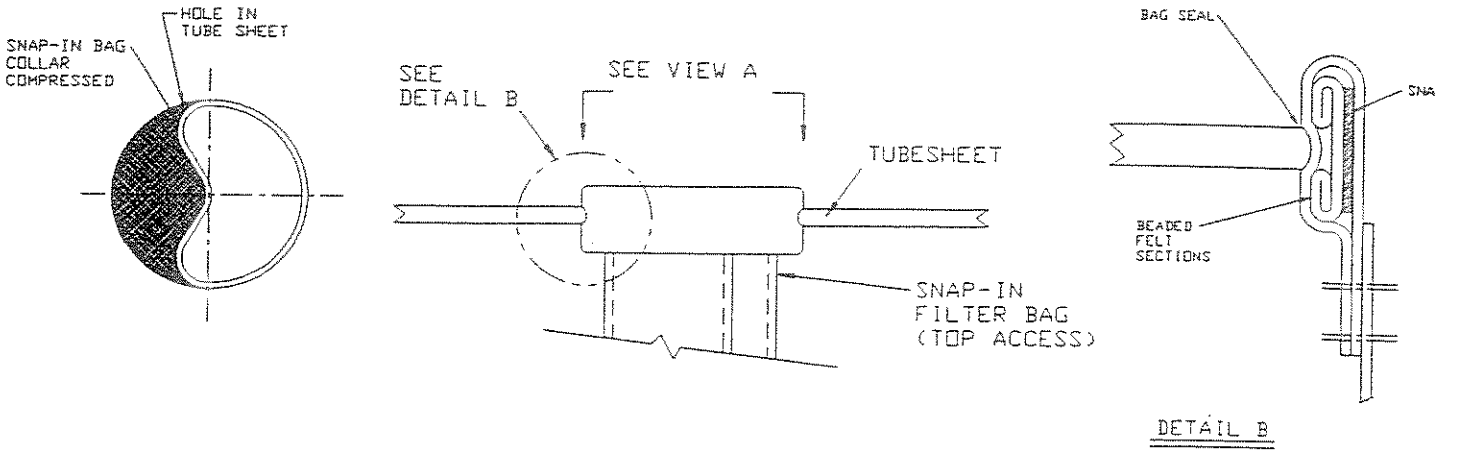

Figure 3. Snap-In Pulsejet Bag Installation

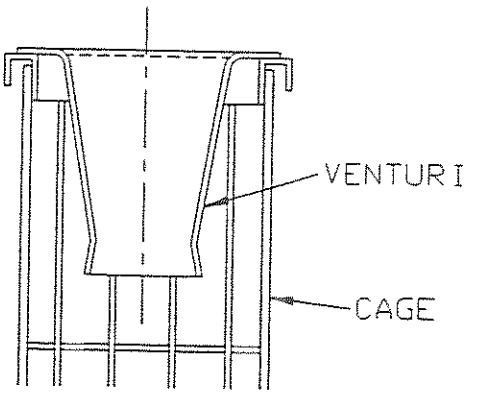

Figure 4. Typical Cage w/Venturi Assembly

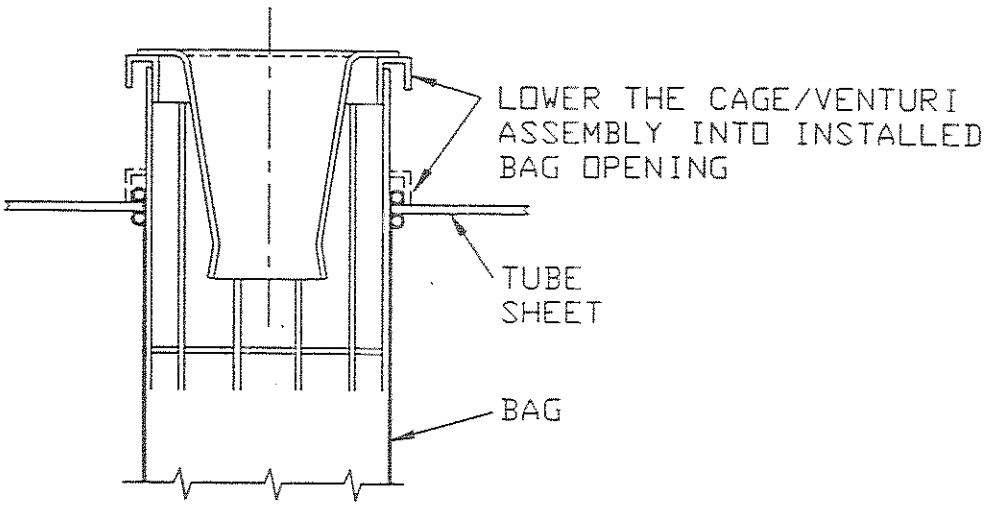

Figure 5. Filter Bag/Cage Installation

14. Weekly Baghouse Inspection

The units should be checked a minimum of once weekly for performance and operation effectiveness. At a minimum, the inspection should include noting the differential pressure (Delta P) across the baghouse, operation of timer sequence, solenoid operation, diaphragm valve operation, hopper discharge, and stack visible emissions (VE). During the inspection, also listen for the pulsing of the blow tubes to verify diaphragm operation. You should also listen for unusual noises and/or vibration from the fan. A zero Delta P reading on an operating baghouse may be an indication of a plugged line, typically on the dirty side of the baghouse, the upstream or underside of the tub sheet. When both lines are clear and the gauge is, operating normally there will be a slight positive deflection in the reading each time a row is cleaned/pulsed.

During the inspection also check the pressure at the compressed air header, bleed/drain the compressed air header, and verifying that the hopper is empty. Hoppers without a bindicator/level indicator must be sounded by tapping on the hopper/access door with a metal object to determine the presence of material build up. If the unit is insulated you may sound the area of the hopper discharge, screw conveyor inlet point, or check the flop gates (where applicable).

15. Monthly Baghouse Check

At least once monthly, you should check the access doors/hatches for leaks, check air lines and fittings for leaks, and verify the operation of the rotary airlock, screw conveyor or other associated dust removal devices. Since these are typically enclosed systems, check to see that the airlock/motor is turning and the tilt or flop gates are allowing material removal from the hopper. Check the screw conveyor and drive motor for operation. Where practical, you should check the screw conveyor at both ends to verify that a shaft or coupling is not broken, although such a condition may be indicated by an over heating or high Amp condition of the drive motor.

16. Quarterly and Yearly Baghouse Checks

The baghouse should be checked quarterly and yearly for leaks and/or corrosion of the housing (interior and exterior), check the tube sheet for material build up and deterioration, condition of bags, alignment of blowpipe, dampers and the condition and tension of drive belts on the fan and material removal devices. You should also verify the cleaning cycle of the baghouse, i.e. is each solenoid firing and that each row in the unit is being cleaned.

Make a general check of the baghouse support structure, access ladders/cages, the platforms/baghouse roof, and the handrails.

17. Visible Emission/Opacity

A baghouse system will usually lack sufficient moisture/water vapor to cause a steam plume and should otherwise have virtually no visible emissions (VE) from the baghouse discharge point. However, even with low moisture, hot stacks gas, relative to ambient conditions, there can be a detached steam plume during conditions of low ambient temperature and sufficient humidity. Otherwise, the baghouse discharge will remain clear (no VE) unless there is a failure in the filter medium or a leak occurs between the clean and dirty sides of the unit.

The opacity/visible emission (VE) allowable for all baghouses is five (5) percent. Opacity is essentially a measurement or indication of the amount of light obscured/scattered by particles in the exit gas stream. The measurement of opacity is made either by an in stack-monitoring device or by the unaided human eye, for baghouse opacity determinations it will be the latter. Opacity is measured over a range of zero (0) to one hundred (100) percent. A trained observer can make opacity determinations over a wide percentage range. However, observations in the ten (10) percent and below range can be very subjective. Furthermore, when observing opacity in the low ranges factors such as sunlight, background color, and the position of the observer relative to the source can greatly bias the results.

Compliance of a point source with an opacity standard is determined by averaging six- minute observations, over a ½ or 1 hour period, taking a reading at a rate of four per minute, which will allow the observer to detect potential changes in opacity due to process variations and/or cleaning events. Particularly for pulse jet baghouses, it is not out of the ordinary to see an increase in opacity after a cleaning event takes place even with the system in good condition. However, this increase sometimes may not be perceptible by the observer.

On each day that the finish mill is operated, a 6-minute-long VE (EPA Method 22 test) must be conducted of the air separator and mill sweep baghouses. And in each month, a 1-minute-long VE (EPA Method 22 test) must be conducted for each of the baghouses except the finish mill's air sweep and air separator. This method is used only to determine the presence of visible emissions and not the opacity of the emissions; therefore, the observer does not have to be certified for VE testing. An employee familiar with the process and the principles of baghouse operation can perform the observation.

The employee should position himself at least 15 feet from the emission point and where the sun is not directly in the eyes of the observer. Fill in the pre-drawn observation form and note the start time. Observe the emission point continuously for the required period, then note the end time of the observation. You will need two stopwatches for this method. Use one stopwatch to monitor the duration. If there must be a break in the observation period, then stop the watch without

resetting the elapsed time. Restart the watch when the observation period begins again. The second stopwatch will be used to record the duration of visible emissions, if any. Start the second stopwatch when you observe visible emissions and stop the watch when the visible emissions stop. Repeat this procedure each time you observe visible emissions. At end of the observation period, the time accumulated on this second watch shows the total time that emissions were seen.

If visible emissions are observed during a Method 22 test, then a 6-minute-long Method 9 test must be conducted on the unit within one hour of the observed emissions. The production shift supervisor and production coordinator maintain certification to complete this Method 9 test.

18. Corrective Measures

When a baghouse is continuously over the opacity limit (5%) it is imperative that it and the process it controls is taken off line as soon as possible, so that the source of the problem can be determined and corrected. In the cement-manufacturing process, due to the particle size of the material captured, a one-quarter (1/4) inch hole is a single bag can cause an opacity that is excess of 5%. When a unit is out of compliance, it should be taken off line within thirty (30) minutes, where the process conditions allow.

With the top-entry type of baghouse, the general area of the bag(s) failure may be determined, relatively quickly, by a visual inspection of the tube sheet. The area of the failure may be indicated by an unusual accumulation of dust on the tube sheet. Failures that produce opacity in the 5% range may not be easily detected with a visual inspection of the tube sheet. You may need a trace dye and a black light to pinpoint less obvious/minor bag leaks and dirty side to clean side breaches. The trace dye must be introduced into the baghouse, upstream of the unit, while it is in operation. Before or immediately after the baghouse and/or the associated process are taken off-line, the Production Manager and/or the Plant Manager should be notified.

Once the decision is made to take the unit off-line the appropriate amount of trace dye should introduced into the inlet ductwork of the baghouse (see trace dye instructions). For the best results, the typical recommended usage for the trace dye is 0.1 lbs. for every 100 square feet of filter cloth or 1 lbs./1000 ft^2 of cloth. Then you may initiate the associated process shut down. Baghouse operation should continue until the process emissions have ceased/stabilized. When process emissions are minimized, the baghouse can be shut down to perform a check of the clean side of the tube sheet, using the black light. With the black light, you may see traces of the dye over a significant area if the bag leak is a large one. However, by shining the black into the bags or along the bag surface, the bag (s) with the leak/hole will have substantial coating/glow from the trace dye at a hole or breach.

When the bag(s)/cage(s) with the indicated leak have been removed, any accumulated dust near the tube sheet cell opening should be pushed into the opening(s) or otherwise removed. It is recommended that the remainder of the dust on the tube sheet be vacuumed up prior to closing the unit for start up. Be sure to remove all old bags and any other objects and materials used during the bag change out to avoid the potential of something being pulled into the fan or plugging material outlets. Before the doors are closed, make sure that the seal areas for the doors are free of dust build up and channels between door areas are cleaned.

With the bags replaced and the clean up activities complete, the baghouse may be closed. The baghouse mapping forms are then updated for future reference (Attachment 1.) Be sure to tighten all of the hold-downs for the doors and covers. When the baghouse is brought back on line the doors and hatches should be checked for signs of leakage. When the process is back on line, allow the system to run approximately one (1) hour, if the unit is not obviously out of compliance, to allow the new bags to become coated and clear out any remaining dust, from the initial leak, downstream of the baghouse. At this point, if the opacity at the baghouse exit is not continuously greater than 5% you should then conduct a ten-(10) minute VE observation. If the unit is in compliance, other than documenting the event and notifying the appropriate manager(s), no further action is needed. If the unit is not in compliance, you must repeat the corrective measures.

19. Troubleshooting (Quick Reference)

The main indicator of potential baghouse problems is the Magnahelic (differential pressure) gauge. Depending on factors such as grain loading, gas temperature, and air-to-cloth ratio, the operating rage for pressure drop across the unit will typically be two (2) to six (6) inches of pressure drop. In most cases, a Delta P outside this range will be an indication that an operational may problem exists. However, a baghouse with new bags or very low grain loading may have a differential pressure of less than one (1). The following is a brief summary of items or condition to check when a baghouse is not functioning as it should.

A. Excessive Pressure Drop

- -Check the line connections at the differential pressure gauge and at the baghouse.
- -Clean out the lines by blowing compressed air through the lines.
- -Check the timer for proper operation/initiation of the cleaning cycle(s).
- -Check compressed air header for correct pressure (80 to 100 PSI)
- -Check solenoid valves for function and sequencing
- -Check for loose wiring
- -Check for dirt in solenoid valve
- -Check diaphragm valve for dirt or ruptured diaphragm
- -Check for excessive moisture in the compressed air system or in the gas

steam from condensation or ambient sources (rain or high humidity).

-Check the temperature of the baghouse. (Operating below the dew point of the gas stream will cause condensation.)

B. Extremely Low Pressure Drop

-Check the line connections at the differential pressure gauge and at the baghouse.

-Clean out the lines by blowing compressed air through the lines.

-Check the fan for proper operation and flow

-Check for leaks in the system, particularly on the clean airside.

-If the VE on the stack/exit point is in question or excessive, there may be broken bag(s) in the unit or improperly installed bags.

C. Secondary Dusting (Dirty Exhaust Air/Visible Emissions)

-At initial start up, if unit is not brought online by the prescribed procedure, there may be secondary dusting for several hours after start up. This condition will subside as the dust cake is established on the bags.

-Check bags for proper installation and or broken bags.

For additional measures, see Attachment 1 (Maintenance Troubleshooting).

Attachment 1

Maintenance Troubleshooting

LUBRICATION

For convenience and to avoid oversights, a check list identifying all points of lubrication and the lubricants to be used should be prepared for all equipment requiring lubrication. The list should also include the procedures and sequences to be followed. Establish a lubrication schedule in accordance with the manufacturer's recommendations and with experience gained from the specific installation and application. The required information is provided on the equipment itself or in the associated documentation. Consult the factory representative if unusual problems are encountered.

AIR HEADER DRAINAGE

Periodically open the drain valve on the compressed air header to blow out accumulated moisture. The frequency required will vary depending on the quality of the compressed air, but the amount of water collected in the header should not be allowed to exceed 1/4 of the volume of the header. It is not necessary to stop the equipment because quantity of air lost over the timer interval required will not reduce the operating pressure sufficiently to hinder operation. For ease of maintenance, it is desirable to extend the pipe and valve down to grade of easy access to draining.

BAG WEAR

Bag wear is usually gradual and, depending on the application, the life of a bag ranges from one to four years. Premature bag failure is usually attributable to either a chemical attack, degradation due to high temperature or physical damage. Should such an event occur, contact the factory for advice.

Abnormal wear can be caused by a number of factors. In some instances, very abrasive materials can cause wear at the bottom of the bags. An increase in system volume can cause a higher velocity and thereby increase abrasion. Contact the factory for advice.

Gas temperatures exceeding the maximum allowed for a given fabric will cause deterioration. The maximum operating temperature for polypropylene is 200°F; for polyester it is 275°F; for Nomex it is 400°F; for fiberglass it is 500°F. The dust collector should not

be operated with broken bags. In addition to letting dust get through to the atmosphere, operating with broken bags for a period of time permits a quantity of dust to accumulate in the clean gas plenum. The compressed air from the pulse valves drives this dust into other bags, abrading them from the top, and hastening general bag failure throughout the collector.

BAG REPAIR

When a bag becomes worn in small areas it can be patched using part of an old bag or a piece of new material of the same type. The patch is made by cementing the material over the worn area using a silicone rubber compound which is compatible with the temperature of the operation and the chemical characteristics of the dust.

BAG REMOVAL AND REPLACEMENT

Access to the bags is through the top plenum door for top-access units or on the side of the dust collector for bottom-access units, after the dust collector system is shut down and the timer is turned off.

TOP ACCESS BAG REMOVAL

Loosen the coupling nuts and remove the blowtubes above the bags which must be removed. Lift the cage assemblies out of the bags using care when handling to avoid bag damage. Grip the bag collar with both hands and squeeze it into a kidney shape to release tension and then pull up on the bag. Lift the bag out when the bag collar is free of the hole in the tube sheet.

Replace the bags in the manner detailed in the paragraph entitled BAG INSTALLATION.

BOTTOM ACCESS BAG REMOVAL

Remove the clamp which secures the bag to the collar. The bag and cage can now be removed from the collar and taken out of the collector. Replacing bags is accomplished in the manner detailed in the paragraph entitled BAG INSTALLATION.

TIMER

The solid-state timer does not usually require any scheduled maintenance.

DIFFERENTIAL PRESSURE GAUGE

If the differential pressure reading is higher or lower than normal, the connecting lines should be checked to be sure they are not plugged with dust. A plugged line can also be detected if the gauge needle does not move when a row is being cleaned. If its diaphragm or working parts are broken, replace the gauge according to the instructions supplied.

DIFFERENTIAL PRESSURE SWITCH

Maintenance of the differential pressure switch is performed in accordance with instructions provided by its manufacturer. In the event of malfunction, verify that the lines are not obstructed and that there are no leaks at any of the connections.

SOLENOID VALVES

Maintenance on the solenoid valves for the pulse valves is to be performed in accordance with instructions provided by the manufacturer.

PULSE VALVE

The pulse valve is a diaphragm valve in which the diaphragm and spring are the only operating parts. To replace them, the high pressure air supply must be shut off and timer de-energized before attempting to service valves. Disconnect the air line between diaphragm valve and solenoid valve. Remove cap screws which secure the bonnet to the body. Lift bonnet from body. A cross-section drawing is provided for reference.

Reassembly the valve with a new diaphragm and spring, secure the bonnet and connect the air line. Supply high pressure air, energize the timer, and check valve operation.

GENERAL

The following paragraphs identify the common indications of trouble which may be encountered and serve as a guide for taking corrective action.

LOSS OF VENTILATION

A complete loss of ventilation usually indicates that the fan is not operating. Check for a motor overload condition or the loss of main power.

EXCESSIVE PRESSURE DROP

An excessive pressure drop can cause a loss of ventilation attributable to some condition at the dust collector. The probable causes are that:

- A pulse valve is not operating.
- There is a timer malfunction
- The air pressure is too low, thus causing insufficient pulse cleaning.
- Moisture is blinding the filter bags.
- Gas flow is greater than system design.

INOPERATIVE PULSE VALVE

The failure of a pulse valve to operate can have several causes. If it is totally inactive, check the solenoid coil on the control valve, the timer, and related connections. Check the pressure gauge at the compressed air header to see if air pressure is being maintained at an adequate level or is under a constant, excessive drain. Low pressure at the header could indicate trouble in the compressed air supply to the dust collector. A constant drain may indicate a broken diaphragm, and this usually can be heard at the faulty valve. However, the problem is usually attributable to the orifices in the control valve having become plugged with dirt coming through the compressed air lines. In this case, the valve will have to be disassembled and cleaned in the manner detailed in the paragraph entitled PULSE VALVE.

DUST IN EXHAUST

Generally, dust in the exhaust is an indication of broken bags. Inspect the bags in each row to locate failures. Replace broken bags in accordance with the procedure defined in the installation section. Continuous dust-laden exhaust can result from improper bag seal allowing dust-laden air to seep between the bag and the tube sheet into the clean air plenum. Refer to the BAG INSTALLATION paragraph for instructions.

It is not uncommon to notice a slight haze in the filtered gas at start-up, after new bags have been installed, or after a row has been cleaned. Some fabrics when new or freshly cleaned allow fine dust particles to pass through for a brief period. This bleed-through can sometimes be seen as a haze in the clean gas discharge. The condition is momentary and requires no corrective action.

MOISTURE INFILTRATION

A dust collector is a dry collection device. Care must be taken to prevent the entrance of moisture. Particularly dust collectors which operate with negative static pressure, moisture will enter at any point that is not sealed. If an area becomes suspect, it should be cleaned and caulked with an epoxy or silicone rubber building sealant. Moisture or condensation can also occur if the gas temperature is allowed to drop below the dew point. This condition should be avoided.

HIGH TEMPERATURE CONDITIONS

The operation of high temperature systems tends to be critical. Usually, they involve filtering gases that are the products of combustion and contain moisture and other vapors which could condense on the bags under certain adverse conditions. When such condensation occurs, the bags can no longer filter the gas flow stops, and the pressure differential increases drastically. Contact Fuller-Kovako if such problems arise for recommendations.

In addition, the relationship between the fan and its operating temperature, the static pressure, and the gas temperature require special consideration. If imbalances or variations beyond those expected occur, problems such as inadequate ventilation, excessive pressure on the dust collector housing, or overloading of the bags and fan motor are possibilities. Contact Fuller-Kovako if deviations from the design conditions appear to be creating problems in performance.

TROUBLESHOOTING GUIDE

SYMPTOM	PROBABLE CAUSE	CORRECTION
No a-c power	Fuse blown	Replace the fuse
	Control circuit open	Control circuits must be closed
	Differential pressure	Jumper pressure switch terminals until the differential pressure switch can be replaced.
No pulse output	Timer board has bad triac	Replace timer board
	OFF TIME	Check resistance 0-1 megohm
One row does not clean	Solenoid valve	Without disconnecting lead to solenoid valve use test light or voltmeter to determine if output is available. Output should be 115 volts when turned on and 0 volts when turned off
		Apply 115 volts from terminal L1 to determine if solenoid valve is working.
Erratic time cycle	Timer board	Move potentiometers through complete range several times.

Attachment 2

Facility Baghouse Listing

TSB Baghoues Specifications & Design Data

Emission Control Unit		Equip. No.	Unit Model No.	Bag Material All 16 Oz./Yard	No. of Bags	Bag Size	Bag Area	Cloth Area	Design ACFM	A-C Ratio	Temp. Deg. F	INWG
Finish mill Baghouse No. 1 (W) *	1	NO9-01	2M1088TA10	Duo-Density Poly.	2,176	5" X 10'	13.09	28,484	128,600	4.51	175	21
Finish mill Baghouse No. 2 (E)	2	N12-01	608TA10	Duo-Density Poly.	608	5" X 10'	13.09	7,959	26,500	3.33	111	15
Finish mill Baghouse No. 3 (S)	3	N91-01	100TA10	Polyester	100	5" X 10'	13.09	1,309	6,000	4.58	200	10
Aeroplo @ Homogenizing Silo	4	E28-01	48TA10	Singed Nomex	48	5" X 10'	13.09	628	3,000	4.77	300	10
Homogenizing Silo, Inlet	5	G07-01	224TA10	Singed Polyester	224	5" X 10'	13.09	2,932	15,000	5.12	200	10
Poldos, Homogen. Silo Outlet	6	H08-01	48TA10	Singed Polyester	48	5" X 10'	13.09	628	3,000	4.77	200	10
Coal Mill No. 1, North	7	S17-01	980183	Singed Ploy. Ept.	144	6" X 14'	21.99	3,167	12,000	3.79	150	16
Coal Mill No. 2, South	8	S17-01	980183	Singed Ploy. Ept.	144	6" X 14'	21.99	3,167	12,000	3.79	150	16
Coal Mill No. 3, East	9	S21-01	52FR8TA	Polyester	52	5" X 8'	10.47	545	2,000	3.67	150	10
Clinker Cooler Conveyor	10	LO3-01	48TA10	Singed Nomex	48	5" X 10'	13.09	628	3,000	4.77	300	10
Clinker Silo 1, Inlet	11	LO6-01	64TA10	Singed Nomex	64	5" X 10'	13.09	838	4,000	4.77	300	10
Clinker Silo 2, Inlet	12	LO8-01	064C	Singed Polyester	64	5" X 10'	13.09	838	4,000	4.77	212	10
Lime/Gyp. Conveyor Discharge	13	MO8-01	64TA10	Singed Polyester	64	5" X 10'	13.09	838	4,000	4.77	212	10
Cement Silo Input No. 1 (E)	14	Q25-01	168TA10	Singed Polyester	168	5" X 10'	13.09	2,199	12,000	5.46	150	10
Cement Silo Input No. 2 (W)	15	Q26-01	168TA10	Singed Polyester	168	5" X 10'	13.09	2,199	12,000	5.46	150	10
Truck Load-out No. 1 (N)	16	Q14-01	48TA10	Singed Polyester	48	5" X 10'	13.09	628	3,000	4.77	150	8
Truck Load-out No. 2 (S)	17	Q17-01	48TA10	Singed Polyester	48	5" X 10'	13.09	628	3,000	4.77	150	8
Railcar Load-out	18	Q21-01	81TA10	Singed Polyester	81	5" X 10'	13.09	1,060	3,000	2.83	150	8
Bagging Operation	19	R12-01	168TA10	Singed Polyester	168	5" X 10'	13.09	2,199	12,000	5.46	150	10
				Totals	**4,465**			**60,874**				

The visible emissions (VE) limit on all baghouses is 5%

Coal Mill No. 1 & No. 2 have Stainless Steel cages and venturi's and Singed Polyester Eptropic (Grounded) Bags

Bag Area Square Feet=(Dia." X 3.1416 X Length")/144 In^2/Ft^2

Attachment 3

Baghouse Inspection Forms

Daily Baghouse Inspection

Date: _____ Inspected By: _____

Baghoues	Equip. No.	Delta P Reading	Emission Point VE	Solenoid Valves * OK	Diaphragm Valves * OK	Material Discharge OK	Fan Oper.
Finish Mill No. 1 (East)	NO9						
Finish Mill No. 2 (West)	N12						
Finish Mill No. 3 (South)	N91						
Aeropol @ Homogenizing Silo	E28						
Homogenizing Silo No. 1 - Inlet	G07						
Homogenizing Silo No. 2 - Outlet	H08						
Coal Mill No. 1 - North	S17						
Coal Mill No. 2 - South	S17						
Coal Mill No. 3 - East	S21						
Clinker Cooler Discharge	L03						
Clinker Silo - Inlet	L06						
Lime/Gyp. Conveyor Discharge	M08						
Cement Silo Inlet No. 1 (East)	Q25						
Cement Silo Inlet No. 2 (West)	Q26						
Truck Load-Out No.1 (North)	Q14						
Truck Load-Out No.2 (South)	Q17						
Railcar Load-Out	Q21						
Packing Plant	R12						
Clinker-to Railcar/Truck Loadout	M19-04						

* - Spot check, not for each row of unit

During the inspection you must note required readings and verify the operation of the items listed and enter check marks as appropriate. For any item not operating or functioning as it should enter "No" and follow up with the area/shift supervisor so that appropriate action and/or repairs may be initiated.

Coal Mill baghouses discharge into the Clinker Cooler Stack

Notes: _____

_____

File: BH Daily.xls

Weekly Baghouse Inspection

Date: _____ Inspected By: _____

Baghouse	Equip. No.	Air Header PSI	Water In Filter/Trap "Yes" or "No"	Filter/Trap Emptied	Hopper Bindicator OK	Access Doors OK
Finish Mill No. 1 (East)	NO9					
Finish Mill No. 2 (West)	N12					
Finish Mill No. 3 (South)	N91					
Aeropol @ Homogenizing Silo	E28					
Homogenizing Silo No. 1 - Inlet	G07					
Homogenizing Silo No. 2 - Outlet	H08					
Coal Mill No. 1 - North	S17					
Coal Mill No. 2 - South	S17					
Coal Mill No. 3 - East	S21					
Clinker Cooler Discharge	L03					
Clinker Silo - Inlet	L06					
Lime/Gyp. Conveyor Discharge	M08					
Cement Silo Inlet No. 1 (East)	Q25					
Cement Silo Inlet No. 2 (West)	Q26					
Truck Load-Out No.1 (North)	Q14					
Truck Load-Out No.2 (South)	Q17					
Railcar Load-Out	Q21					
Packing Plant	R12					
Clinker-to Railcar/Truck Loadout	M19-04					

During the inspection you must verify the operation of the items listed and enter check marks or Yes or No; as appropriate. For any item not operating or functioning as it should enter "No" and follow up with the area/shift supervisor so that appropriate action and/or repairs may be initiated.

Notes: _____

_____

_____

File: BH Weekly.xls

Monthly Baghouse Inspection

Date: _____ Inspected By: _____

Baghouse	Equip. No.	Rotary Air Lock "OK"	Screw Conveyor "OK"	Flop Gate "OK"	Air Slide OK	Damper "OK"	Conveying Device Covers "OK"
Finish Mill No. 1 (East)	NO9						
Finish Mill No. 2 (West)	N12						
Finish Mill No. 3 (South)	N91						
Aeropol @ Homogenizing Silo	E28						
Homogenizing Silo No. 1 - Inlet	G07						
Homogenizing Silo No. 2 - Outlet	H08						
Coal Mill No. 1 - North	S17						
Coal Mill No. 2 - South	S17						
Coal Mill No. 3 - East	S21						
Clinker Cooler Discharge	L03						
Clinker Silo - Inlet	L06						
Clinker Silo 2 - Inlet	L08						
Lime/Gyp. Conveyor Discharge	M08						
Cement Silo Inlet No. 1 (East)	Q25						
Cement Silo Inlet No. 2 (West)	Q26						
Truck Load-Out No.1 (North)	Q14						
Truck Load-Out No.2 (South)	Q17						
Railcar Load-Out	Q21						
Packing Plant	R12						
Clinker-to Railcar/Truck Loadout	M19-04						

During the inspection you must verify the operation of the items listed and enter check marks or Yes or No; as appropriate. For any item not operating or functioning as it should enter "No" and follow up with the area/shift supervisor so that appropriate action and/or repairs may be initiated. Enter "N/A" for items not a part of the unit.

Notes: _____

_____

_____

File: BH Monthly.xls

Quarterly Baghouse Inspection

	Emission Control Unit	Equip. No.	Baghouse Structure*	Condition Of Bags	Condition Of Tubesheet	Blowtube Alignment	Inlet Duct(s)	Outlet Duct	Fan	Fan & Housing	Drive Belts
1	Finish Mill Baghouse No.1 (E)	N09-01									
2	Finish Mill Baghouse No.2 (W)	N12-01									
3	Finish Mill Baghouse No. 3 (S)	N91-01									
4	Aeropol @ Homogenizing Silo	E28-01									
5	Homogenizing Silo No. 1, Inlet	G07-01									
6	Homogenizing Silo No. 2, Outlet	H08-01									
7	Coal Mill No. 1, North	S17-01									
8	Coal Mill No. 2, South	S17-01									
9	Coal Mill No. 3, East	S21-01									
10	Clinker Cooler Conveyor	LO3-01									
11	Clinker Silo 1, Inlet	LO6-01									
12	Clinker Silo 2, Inlet	LO8-01									
13	Lime/Gyp. Conveyor Discharge	MO8-01									
14	Cement Silo Input No. 1 (E)	Q25-01									
15	Cement Silo Input No. 2 (W)	Q26-01									
16	Truck Load-out No. 1 (N)	Q14-01									
17	Truck Load-out No. 2 (S)	Q17-01									
18	Railcar Load-out	Q21-01									
19	Packing Plant	R12-01									
20	Clinker-to Railcar/Truck Loadout	M19-04									

* - If baghouse is insulated inspect the condition of sheet metal

The coal mill baghouses are explosion proof and do not afford ready access. The interior inspection of these units will conducted when bag replacement is required or other major repairs or replacements require that access to the interior of the unit(s).

Attachment 4

Baghouse Mapping Forms

Baghouse Bag Installation Maps - 1

Installed By: _____ Date: _____

Comp. Air Header

O	O	O	O	O	O	A	Position
O	O	O	O	O	O	B	
O	O	O	O	O	O	C	
O	O	O	O	O	O	D	
O	O	O	O	O	O	E	
O	O	O	O	O	O	F	
O	O	O	O	O	O	G	
O	O	O	O	O	O	H	
Row No.	1	2	3	4	5	6	

48 - Bag	Unit No.
Aeropol @ Blend Silo	E28-01
Clinker Cooler Conv./Breaker	L03-01
Poldos	H08-01
Truck Load-out (N)	Q14-01
Truck Load-out (S)	Q17-01

Installed By: _____ Date: _____

Comp. Air Header

O	O	O	O	O	O	O	O	A	Position
O	O	O	O	O	O	O	O	B	
O	O	O	O	O	O	O	O	C	
O	O	O	O	O	O	O	O	D	
O	O	O	O	O	O	O	O	E	
O	O	O	O	O	O	O	O	F	
O	O	O	O	O	O	O	O	G	
O	O	O	O	O	O	O	O	H	
Row No.	1	2	3	4	5	6	7	8	

64 - Bag	Unit No.
Clinker Silo No. 1 (N)	L06-01
Clinker Silo No. (S)	L08-01
Limestone/Gyp Conveyor	M08-01

"X" out the bag(s) replaced and indicate the unit(s) in which the change took place
If bags in multiple units of the same size are changed on the same day, use a separate sheet for each unit

Bag Replacement Maps - 2

Installed By: _____ Date: _____

Comp. Air Header

O	O	O	O	O	O	O	O	O	O	A	Position
O	O	O	O	O	O	O	O	O	O	B	
O	O	O	O	O	O	O	O	O	O	C	
O	O	O	O	O	O	O	O	O	O	D	
O	O	O	O	O	O	O	O	O	O	E	
O	O	O	O	O	O	O	O	O	O	F	
O	O	O	O	O	O	O	O	O	O	G	
O	O	O	O	O	O	O	O	O	O	H	
O	O	O	O	O	O	O	O	O	O	I	
O	O	O	O	O	O	O	O	O	O	J	
Row No.	1	2	3	4	5	6	7	8	9	10	

100 - Bags	Unit
Finish Mill No. 3 (E)	N91-01

Installed By: _____ Date: _____

Comp. Air Header

O	O	O	O	O	O	O	O	A	Position
O	O	O	O	O	O	O	O	B	
O	O	O	O	O	O	O	O	C	
O	O	O	O	O	O	O	O	D	
O	O	O	O	O	O	O	O	E	
O	O	O	O	O	O	O	O	F	
O	O	O	O	O	O	O	O	G	
O	O	O	O	O	O	O	O	H	
O	O	O	O	O	O	O	O	I	
O	O	O	O	O	O	O	O		
							O	J	
Row No.	1	2	3	4	5	6	7	8	

81 - Bags	Unit
Railcar Loadout	Q21-01

"X" out the bag(s) replaced and indicate the unit(s) in which the change took place

If bags in multiple units of the same size are changed on the same day, use a separate sheet for each unit

File: Bag Replacement Maps-2.xls

Baghouse Bag Installation Maps - 3

Installed By: _____ Date: _____

168 - Bags	Unit No.
Cement Silo No. 1 (E)	Q25-01
Cement Silo No. 2 (W)	Q26-01
Bagging Operation	R12-01

Comp. Air Header

														Position
	O	O	O	O	O	O	O	O	O	O	O	O	1	
	O	O	O	O	O	O	O	O	O	O	O	O	2	
	O	O	O	O	O	O	O	O	O	O	O	O	3	
	O	O	O	O	O	O	O	O	O	O	O	O	4	
	O	O	O	O	O	O	O	O	O	O	O	O	5	
	O	O	O	O	O	O	O	O	O	O	O	O	6	
	O	O	O	O	O	O	O	O	O	O	O	O	7	
	O	O	O	O	O	O	O	O	O	O	O	O	8	
	O	O	O	O	O	O	O	O	O	O	O	O	9	
	O	O	O	O	O	O	O	O	O	O	O	O	10	
	O	O	O	O	O	O	O	O	O	O	O	O	11	
	O	O	O	O	O	O	O	O	O	O	O	O	12	
	O	O	O	O	O	O	O	O	O	O	O	O	13	
	O	O	O	O	O	O	O	O	O	O	O	O	14	
Row No.	1	2	3	4	5	6	7	8	9	10	11	12		

"X" out the bag(s) replaced and indicate the unit(s) in which the change took place

File: Bag Replacement Maps-3.xls

Blend Silo Bag Map

Installed By: _____ Date: _____

224 - Bags	Unit No.
Homogenizing Silo, Inlet	G07-01

Comppressed Air Header

	O	O	O	O	O	O	O	O	O	O	O	O	O	O	1	Position
	O	O	O	O	O	O	O	O	O	O	O	O	O	O	2	
	O	O	O	O	O	O	O	O	O	O	O	O	O	O	3	
	O	O	O	O	O	O	O	O	O	O	O	O	O	O	4	
	O	O	O	O	O	O	O	O	O	O	O	O	O	O	5	
	O	O	O	O	O	O	O	O	O	O	O	O	O	O	6	
	O	O	O	O	O	O	O	O	O	O	O	O	O	O	7	
	O	O	O	O	O	O	O	O	O	O	O	O	O	O	8	
	O	O	O	O	O	O	O	O	O	O	O	O	O	O	9	
	O	O	O	O	O	O	O	O	O	O	O	O	O	O	10	
	O	O	O	O	O	O	O	O	O	O	O	O	O	O	11	
	O	O	O	O	O	O	O	O	O	O	O	O	O	O	12	
	O	O	O	O	O	O	O	O	O	O	O	O	O	O	13	
	O	O	O	O	O	O	O	O	O	O	O	O	O	O	14	
	O	O	O	O	O	O	O	O	O	O	O	O	O	O	15	
	O	O	O	O	O	O	O	O	O	O	O	O	O	O	16	
Row No.	1	2	3	4	5	6	7	8	9	10	11	12	13	14		

"X" out the bag(s) replaced and indicate the unit(s) in which the change took place

File: Blend Silo Bag Map.xls

Coal Mill Baghouse Bag Installation Map

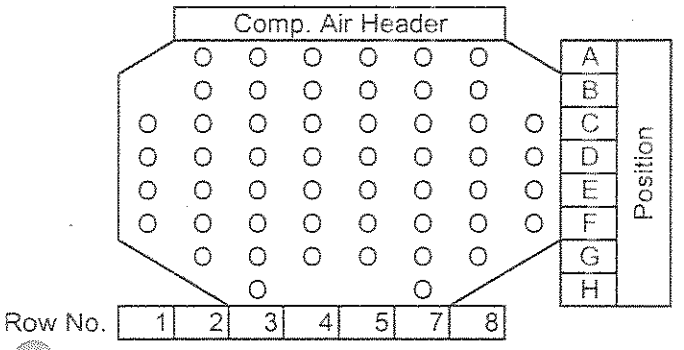

Installed By: _____

Date: _____

52 - Bag	Unit No.
Coal Mill No. 3 East	S21-01

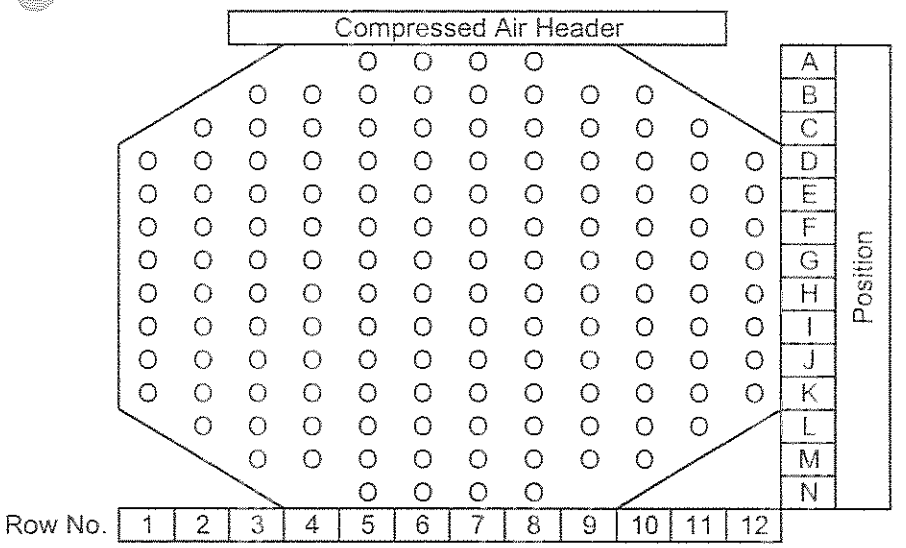

Installed By: _____

Date: _____

144 - Bag	Unit No.
Coal Mill No. 1 North	S17-01

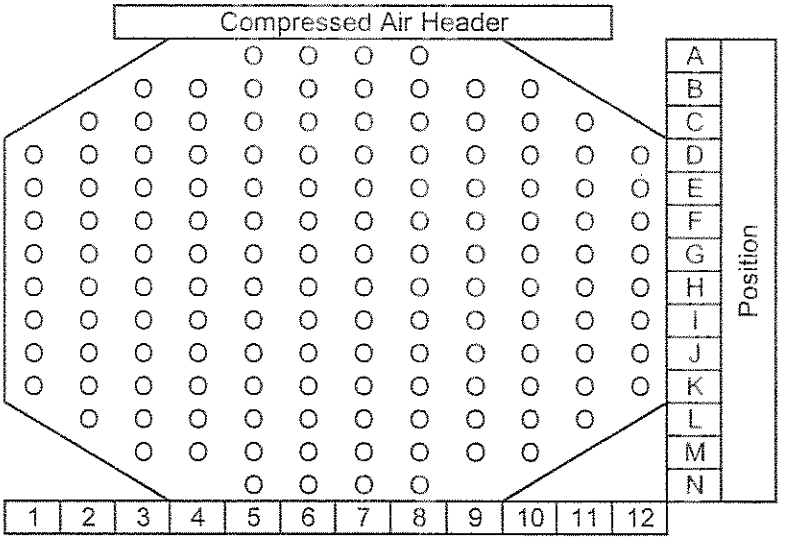

Installed By: _____

Date: _____

144 - Bag	Unit No.
Coal Mill No. 2 South	S17-01

"X" out the bag(s) replaced and indicate the unit(s) in which the change took place

File: Coal Mill BH Bag Maps.xls

Finish Mill No. 2 (S) Bag Installation Map

Compressed Air Header

| | | |

Finish Mill No. 1 Bag Installation Map

2,176 Bags, 1,088/Side	Unit No.
Finish Mill No. 2 (N)	N09-01

Date: _____

Compressed Air Header

Position

	8	9	10	11	12	13	14	15	16	17	18	19	20	21	22	23	24	25	26	27	28	29	30	31	32	33	34	35	36	37	38	39	40	41	42	43	44	45	46	47	48	49	50	51	52	53	54	55	56	57	58	59	60	61	62	63	64
A	O	O	O	O	O	O	O	O	O	O	O	O	O	O	O	O	O	O	O	O	O	O	O	O	O	O	O	O	O	O	O	O	O	O	O	O	O	O	O	O	O	O	O	O	O	O	O	O	O	O	O	O	O	O	O	O	O
B	O	O	O	O	O	O	O	O	O	O	O	O	O	O	O	O	O	O	O	O	O	O	O	O	O	O	O	O	O	O	O	O	O	O	O	O	O	O	O	O	O	O	O	O	O	O	O	O	O	O	O	O	O	O	O	O	O
C	O	O	O	O	O	O	O	O	O	O	O	O	O	O	O	O	O	O	O	O	O	O	O	O	O	O	O	O	O	O	O	O	O	O	O	O	O	O	O	O	O	O	O	O	O	O	O	O	O	O	O	O	O	O	O	O	O
D	O	O	O	O	O	O	O	O	O	O	O	O	O	O	O	O	O	O	O	O	O	O	O	O	O	O	O	O	O	O	O	O	O	O	O	O	O	O	O	O	O	O	O	O	O	O	O	O	O	O	O	O	O	O	O	O	O
E	O	O	O	O	O	O	O	O	O	O	O	O	O	O	O	O	O	O	O	O	O	O	O	O	O	O	O	O	O	O	O	O	O	O	O	O	O	O	O	O	O	O	O	O	O	O	O	O	O	O	O	O	O	O	O	O	O
F	O	O	O	O	O	O	O	O	O	O	O	O	O	O	O	O	O	O	O	O	O	O	O	O	O	O	O	O	O	O	O	O	O	O	O	O	O	O	O	O	O	O	O	O	O	O	O	O	O	O	O	O	O	O	O	O	O
G	O	O	O	O	O	O	O	O	O	O	O	O	O	O	O	O	O	O	O	O	O	O	O	O	O	O	O	O	O	O	O	O	O	O	O	O	O	O	O	O	O	O	O	O	O	O	O	O	O	O	O	O	O	O	O	O	O
H	O	O	O	O	O	O	O	O	O	O	O	O	O	O	O	O	O	O	O	O	O	O	O	O	O	O	O	O	O	O	O	O	O	O	O	O	O	O	O	O	O	O	O	O	O	O	O	O	O	O	O	O	O	O	O	O	O
I	O	O	O	O	O	O	O	O	O	O	O	O	O	O	O	O	O	O	O	O	O	O	O	O	O	O	O	O	O	O	O	O	O	O	O	O	O	O	O	O	O	O	O	O	O	O	O	O	O	O	O	O	O	O	O	O	O
J	O	O	O	O	O	O	O	O	O	O	O	O	O	O	O	O	O	O	O	O	O	O	O	O	O	O	O	O	O	O	O	O	O	O	O	O	O	O	O	O	O	O	O	O	O	O	O	O	O	O	O	O	O	O	O	O	O
K	O	O	O	O	O	O	O	O	O	O	O	O	O	O	O	O	O	O	O	O	O	O	O	O	O	O	O	O	O	O	O	O	O	O	O	O	O	O	O	O	O	O	O	O	O	O	O	O	O	O	O	O	O	O	O	O	O
L	O	O	O	O	O	O	O	O	O	O	O	O	O	O	O	O	O	O	O	O	O	O	O	O	O	O	O	O	O	O	O	O	O	O	O	O	O	O	O	O	O	O	O	O	O	O	O	O	O	O	O	O	O	O	O	O	O
M	O	O	O	O	O	O	O	O	O	O	O	O	O	O	O	O	O	O	O	O	O	O	O	O	O	O	O	O	O	O	O	O	O	O	O	O	O	O	O	O	O	O	O	O	O	O	O	O	O	O	O	O	O	O	O	O	O
N	O	O	O	O	O	O	O	O	O	O	O	O	O	O	O	O	O	O	O	O	O	O	O	O	O	O	O	O	O	O	O	O	O	O	O	O	O	O	O	O	O	O	O	O	O	O	O	O	O	O	O	O	O	O	O	O	O
O	O	O	O	O	O	O	O	O	O	O	O	O	O	O	O	O	O	O	O	O	O	O	O	O	O	O	O	O	O	O	O	O	O	O	O	O	O	O	O	O	O	O	O	O	O	O	O	O	O	O	O	O	O	O	O	O	O
P	O	O	O	O	O	O	O	O	O	O	O	O	O	O	O	O	O	O	O	O	O	O	O	O	O	O	O	O	O	O	O	O	O	O	O	O	O	O	O	O	O	O	O	O	O	O	O	O	O	O	O	O	O	O	O	O	O
Q	O	O	O	O	O	O	O	O	O	O	O	O	O	O	O	O	O	O	O	O	O	O	O	O	O	O	O	O	O	O	O	O	O	O	O	O	O	O	O	O	O	O	O	O	O	O	O	O	O	O	O	O	O	O	O	O	O

Compressed Air Header

Position

	64	63	62	61	60	59	58	57	56	55	54	53	52	51	50	49	48	47	46	45	44	43	42	41	40	39	38	37	36	35	34	33	32	31	30	29	28	27	26	25	24	23	22	21	20	19	18	17	16	15	14	13	12	11	10	9	8
A	O	O	O	O	O	O	O	O	O	O	O	O	O	O	O	O	O	O	O	O	O	O	O	O	O	O	O	O	O	O	O	O	O	O	O	O	O	O	O	O	O	O	O	O	O	O	O	O	O	O	O	O	O	O	O	O	O
B	O	O	O	O	O	O	O	O	O	O	O	O	O	O	O	O	O	O	O	O	O	O	O	O	O	O	O	O	O	O	O	O	O	O	O	O	O	O	O	O	O	O	O	O	O	O	O	O	O	O	O	O	O	O	O	O	O
C	O	O	O	O	O	O	O	O	O	O	O	O	O	O	O	O	O	O	O	O	O	O	O	O	O	O	O	O	O	O	O	O	O	O	O	O	O	O	O	O	O	O	O	O	O	O	O	O	O	O	O	O	O	O	O	O	O
D	O	O	O	O	O	O	O	O	O	O	O	O	O	O	O	O	O	O	O	O	O	O	O	O	O	O	O	O	O	O	O	O	O	O	O	O	O	O	O	O	O	O	O	O	O	O	O	O	O	O	O	O	O	O	O	O	O
E	O	O	O	O	O	O	O	O	O	O	O	O	O	O	O	O	O	O	O	O	O	O	O	O	O	O	O	O	O	O	O	O	O	O	O	O	O	O	O	O	O	O	O	O	O	O	O	O	O	O	O	O	O	O	O	O	O
F	O	O	O	O	O	O	O	O	O	O	O	O	O	O	O	O	O	O	O	O	O	O	O	O	O	O	O	O	O	O	O	O	O	O	O	O	O	O	O	O	O	O	O	O	O	O	O	O	O	O	O	O	O	O	O	O	O
G	O	O	O	O	O	O	O	O	O	O	O	O	O	O	O	O	O	O	O	O	O	O	O	O	O	O	O	O	O	O	O	O	O	O	O	O	O	O	O	O	O	O	O	O	O	O	O	O	O	O	O	O	O	O	O	O	O
H	O	O	O	O	O	O	O	O	O	O	O	O	O	O	O	O	O	O	O	O	O	O	O	O	O	O	O	O	O	O	O	O	O	O	O	O	O	O	O	O	O	O	O	O	O	O	O	O	O	O	O	O	O	O	O	O	O
I	O	O	O	O	O	O	O	O	O	O	O	O	O	O	O	O	O	O	O	O	O	O	O	O	O	O	O	O	O	O	O	O	O	O	O	O	O	O	O	O	O	O	O	O	O	O	O	O	O	O	O	O	O	O	O	O	O
J	O	O	O	O	O	O	O	O	O	O	O	O	O	O	O	O	O	O	O	O	O	O	O	O	O	O	O	O	O	O	O	O	O	O	O	O	O	O	O	O	O	O	O	O	O	O	O	O	O	O	O	O	O	O	O	O	O
K	O	O	O	O	O	O	O	O	O	O	O	O	O	O	O	O	O	O	O	O	O	O	O	O	O	O	O	O	O	O	O	O	O	O	O	O	O	O	O	O	O	O	O	O	O	O	O	O	O	O	O	O	O	O	O	O	O
L	O	O	O	O	O	O	O	O	O	O	O	O	O	O	O	O	O	O	O	O	O	O	O	O	O	O	O	O	O	O	O	O	O	O	O	O	O	O	O	O	O	O	O	O	O	O	O	O	O	O	O	O	O	O	O	O	O
M	O	O	O	O	O	O	O	O	O	O	O	O	O	O	O	O	O	O	O	O	O	O	O	O	O	O	O	O	O	O	O	O	O	O	O	O	O	O	O	O	O	O	O	O	O	O	O	O	O	O	O	O	O	O	O	O	O
N	O	O	O	O	O	O	O	O	O	O	O	O	O	O	O	O	O	O	O	O	O	O	O	O	O	O	O	O	O	O	O	O	O	O	O	O	O	O	O	O	O	O	O	O	O	O	O	O	O	O	O	O	O	O	O	O	O
O	O	O	O	O	O	O	O	O	O	O	O	O	O	O	O	O	O	O	O	O	O	O	O	O	O	O	O	O	O	O	O	O	O	O	O	O	O	O	O	O	O	O	O	O	O	O	O	O	O	O	O	O	O	O	O	O	O
P	O	O	O	O	O	O	O	O	O	O	O	O	O	O	O	O	O	O	O	O	O	O	O	O	O	O	O	O	O	O	O	O	O	O	O	O	O	O	O	O	O	O	O	O	O	O	O	O	O	O	O	O	O	O	O	O	O
Q	O	O	O	O	O	O	O	O	O	O	O	O	O	O	O	O	O	O	O	O	O	O	O	O	O	O	O	O	O	O	O	O	O	O	O	O	O	O	O	O	O	O	O	O	O	O	O	O	O	O	O	O	O	O	O	O	O

) Bag Map.xls

"X" out the bag(s) replaced and indicate the unit(s) in which the change took place

Attachment 5

Method 22 Visible Emission Forms (Pre-filled)

METHOD 22 VE INSTRUCTIONS

Subpart LLL—Daily and Monthly Observations of Visible Emissions (VE)

Daily, 6-minute observations are required of the finish mill's air sweep and separator baghouses (N09 and N12) during normal production periods. Monthly, 1-minute observations are required of each baghouse's vent; each conveyor-transfer point (unless completely enclosed); each bagging system; and each truck- and railcar-loadout spout while the equipment is in operation. Sites requiring 1-minute observations are:

-G07 (Blend-silo BH)	-E28 (Aeropol BH)	-H08 (Poldos BH)
-L03 (Cl. breaker BH)	-S21 (Coal-bin BH)	-L06 (N. Cl. silo BH)
-L08 (S. Cl. silo BH)	-M08 (Gyp. conv. BH)	-N91 (FM BH#3)
-Q25 (W. Cement silo BH)	-Q26 (E. Cement silo BH)	-Q14 (S. Truck L/O BH)
-Q17 (N. Truck L/O BH)	-Q21 (Railcar L/O BH)	-R12 (Bagging system BH)
-R06 (Cement-bag-filling machine)	-Q20 (Railcar L/O spout)	-Q16 (N. truck L/O spout)
-M19-04 (Clinker-to-Railcar/Truck L/O BH)		-Q13 (S. truck L/O spout)

Method 22—Instructions for Subpart LLL VE Determination

1. Select a position that enables a clear view of the potential emission point or of the opening of the building that contains the potential emission point. The position may be from 15 feet to 1300 feet away. Sunlight must not shine directly into the observer's eyes. (Note: If a potential emission point is inside a building but the opening of the building is used as the potential emission point, then each opening of that building must be observed and a Method 22 form completed for each.)
2. On the Method 22 form, sketch the potential emission point or building-opening that is under observation; fill in name, date, weather, and other information at the form's top. For indoor observations, indicate the lighting intensity on the form.
3. Record the clock start time; observe the potential emission point for one minute (monthly VE check) or for six minutes (daily VE check of finish mill).
4. At the end of the observation period, indicate on the form whether or not any visible emission (excluding condensed water vapor) was seen. Check the form for completeness.
5. Place the finished Method 22 form into the "Subpart LLL VE Records" notebook.
6. If a visible emission was seen, inform the maintenance and environmental managers immediately. If a VE was seen, the following actions are required:
   (a) Regarding the monthly VE, a 6-minute Method 9 observation must be made of the emission point within one hour to see if opacity exceeds 10% limit of Subpart LLL.
   (b) Regarding the daily VE of the finish mill, within one hour the corrective actions identified in the O&M plan must be initiated. Within 24 hours of the first Method 22 observation, a follow-up 6-minute observation must be made. If emissions are still observed, a Method 9 observation must be conducted for 30 minutes.

Florida Rock Industries, Inc.--Thompson S. Baker Cement Plant
Method 22 Visible Emissions Form

Process/Unit: Raw Mill System (EU 002, EP 01) Date: _____

Source Equipment No. & Description: E28---Aeropol baghouse exhaust

Sky Conditions:	Clear		Partly Sunny		Partly Cloudy		Over-Cast	

Precipitation:	Yes			No		Wind Speed ~MPH:	
Temperature		Deg. F				Direction To Source:	W

Layout Sketch:

Sketch the process unit and indicate observer position relative to the source and the sun. Also, indicate the potential/actual emission point of the unit and draw an arrow showing wind direction.

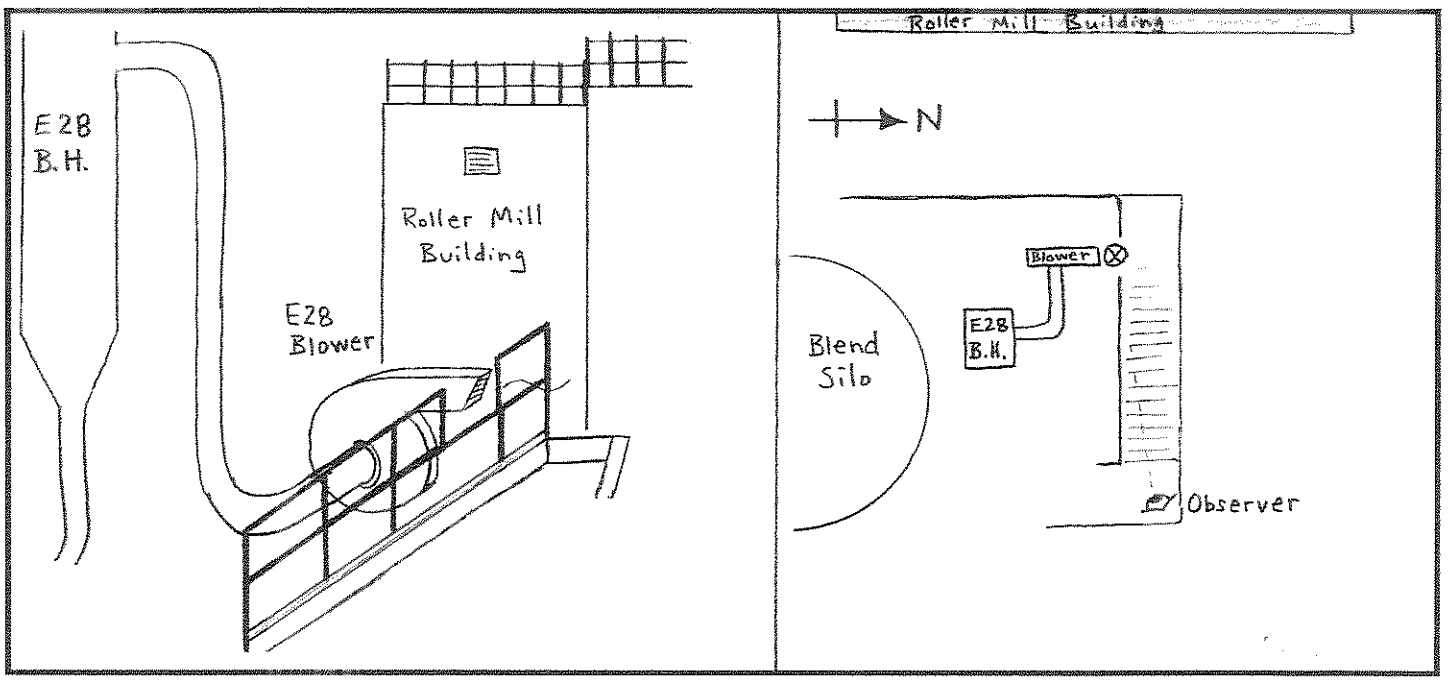

Clock start time of 1-minute observation period: _____ (Indicate a.m. or p.m.)

Was equipment in normal operation? Yes ☐ No ☐

Were visible emissions (except water vapor) observed? Yes ☐ No ☐

(Note: If emissions were observed, notify maintenance and environmental managers immediately.)

Signature of person completing 1-minute observation: _____

Printed name of person completing 1-minute observation: _____

Florida Rock Industries, Inc.--Thompson S. Baker Cement Plant
Method 22 Visible Emissions Form

Process/Unit: Raw Mill System (EU 002, EP 03) Date: _____

Source Equipment No. & Description: G07---Blend-silo baghouse exhaust

Sky Conditions:	Clear		Partly Sunny		Partly Cloudy		Over-Cast	

Precipitation:	Yes		No		Wind Speed ~MPH:	

Temperature		Deg. F	Direction To Source:	N

Layout Sketch:
Sketch the process unit and indicate observer position relative to the source and the sun. Also, indicate the potential/actual emission point of the unit and draw an arrow showing wind direction.

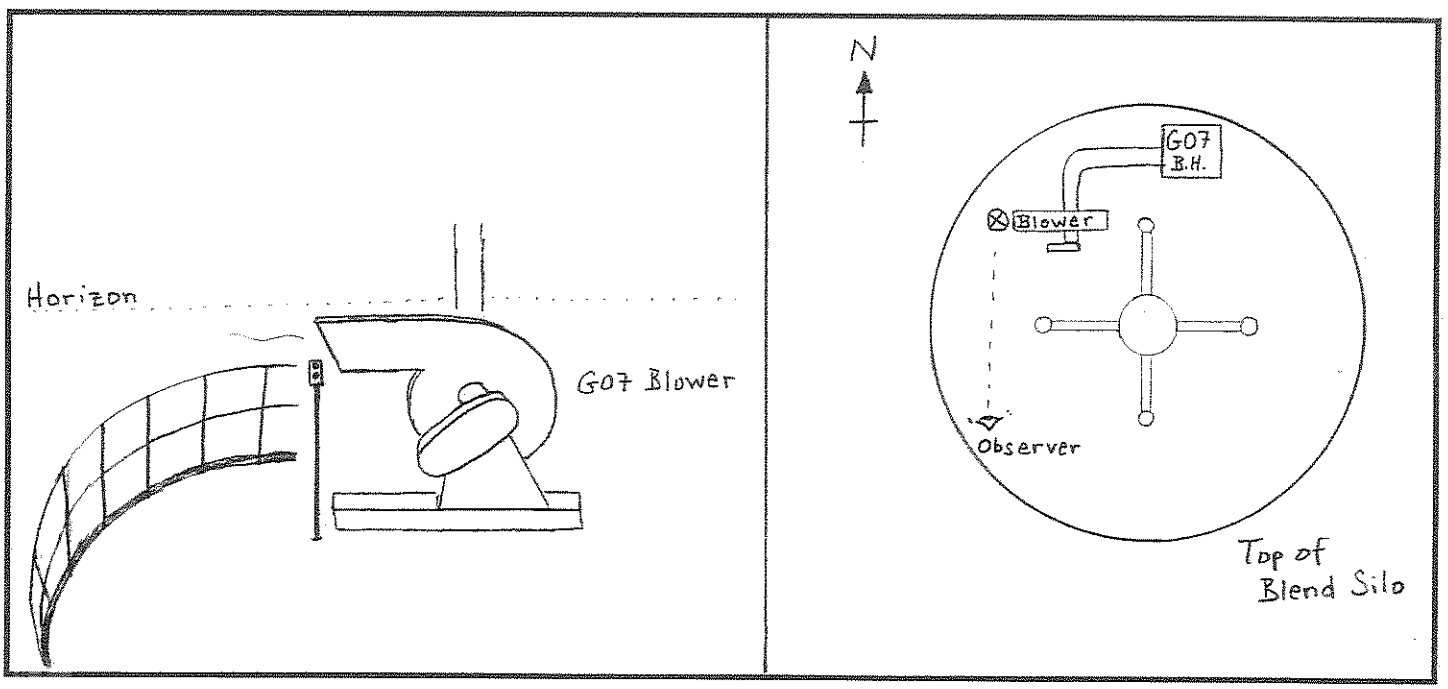

Clock start time of 1-minute observation period: _____ (Indicate a.m. or p.m.)

Was equipment in normal operation? Yes ☐ No ☐

Were visible emissions (except water vapor) observed? Yes ☐ No ☐
(Note: If emissions were observed, notify maintenance and environmental managers immediately.)

Signature of person completing 1-minute observation: _____

Printed name of person completing 1-minute observation: _____

Florida Rock Industries, Inc.--Thompson S. Baker Cement Plant
Method 22 Visible Emissions Form

Process/Unit: Raw Mill System (EU 002, EP 04) Date: _____

Source Equipment No. & Description: H08---Poldos baghouse exhaust

Sky Conditions:	Clear		Partly Sunny		Partly Cloudy		Over-Cast	

Precipitation:	Yes		No		Wind Speed ~MPH:	

Temperature		Deg. F	Direction To Source:	N

Layout Sketch:
Sketch the process unit and indicate observer position relative to the source and the sun. Also, indicate the potential/actual emission point of the unit and draw an arrow showing wind direction.

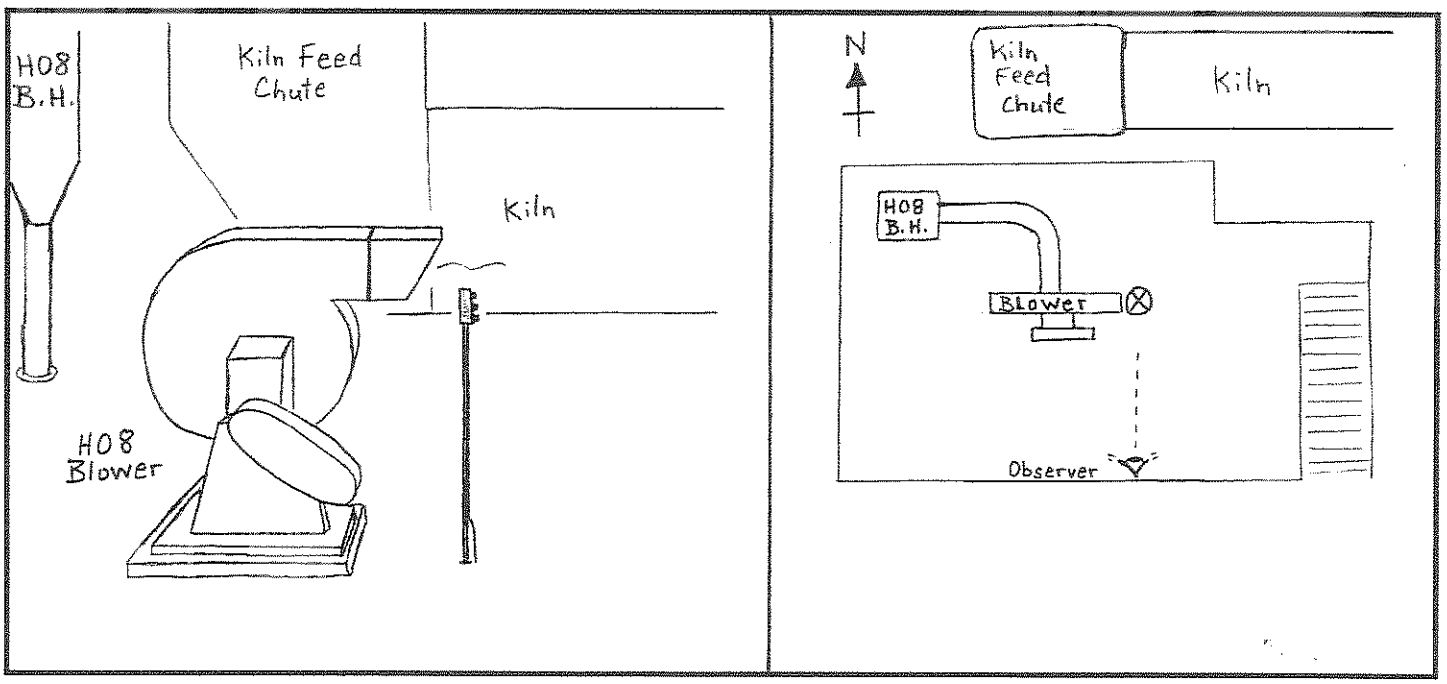

Clock start time of 1-minute observation period: _____ (Indicate a.m. or p.m.)

Was equipment in normal operation? Yes ☐ No ☐

Were visible emissions (except water vapor) observed? Yes ☐ No ☐
(Note: If emissions were observed, notify maintenance and environmental managers immediately.)

Signature of person completing 1-minute observation: _____

Printed name of person completing 1-minute observation: _____

Florida Rock Industries, Inc.--Thompson S. Baker Cement Plant
Method 22 Visible Emissions Form

Process/Unit: Clinker Handling (EU 004, EP 01) Date: _____

Source Equipment No. & Description: L03---Clinker-cooler-discharge baghouse exhaust

Sky Conditions:	Clear		Partly Sunny		Partly Cloudy		Over-Cast	

Precipitation:	Yes			No		Wind Speed ~MPH:	

Temperature		Deg. F	Direction To Source:	N

Layout Sketch:

Sketch the process unit and indicate observer position relative to the source and the sun. Also, indicate the potential/actual emission point of the unit and draw an arrow showing wind direction.

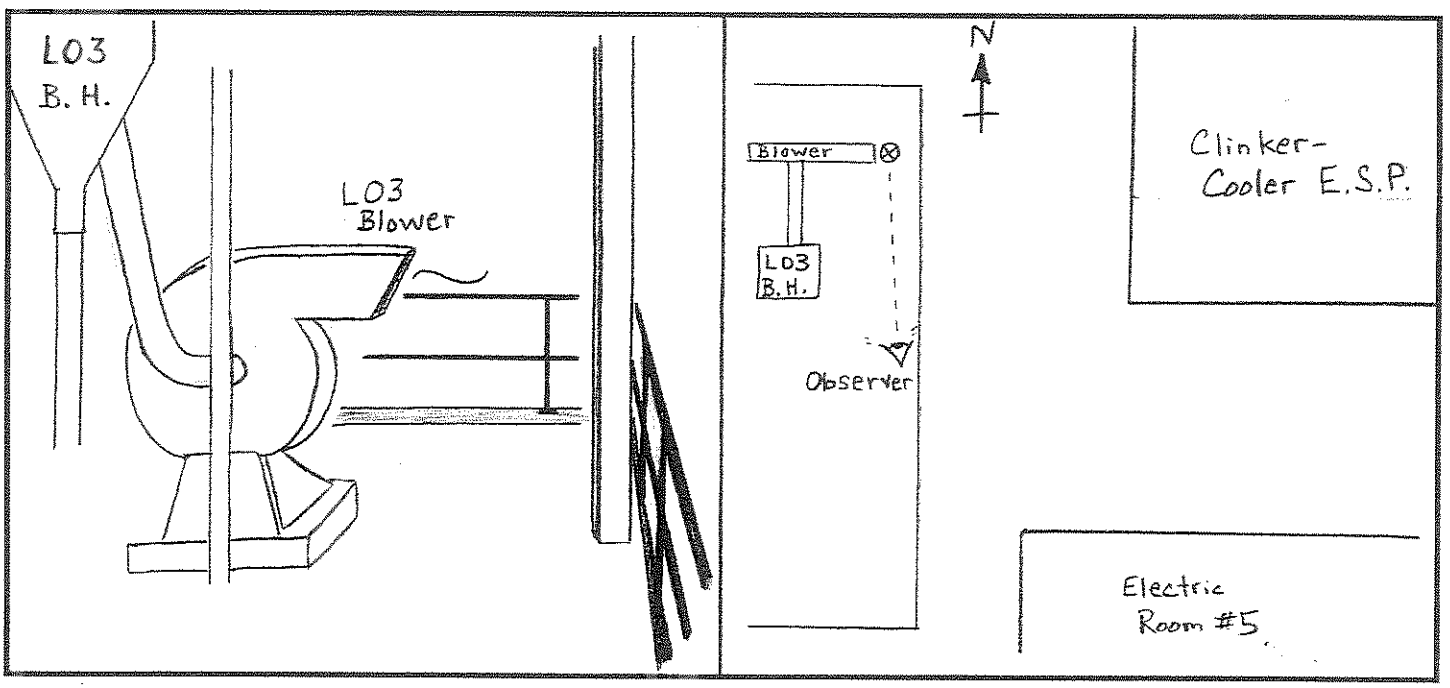

Clock start time of 1-minute observation period: _____ (Indicate a.m. or p.m.)

Was equipment in normal operation? Yes ☐ No ☐

Were visible emissions (except water vapor) observed? Yes ☐ No ☐

(Note: If emissions were observed, notify maintenance and environmental managers immediately.)

Signature of person completing 1-minute observation: _____

Printed name of person completing 1-minute observation: _____

Florida Rock Industries, Inc.--Thompson S. Baker Cement Plant
Method 22 Visible Emissions Form

Process/Unit: Clinker Handling (EU 004, EP 02) Date: _____

Source Equipment No. & Description: L06---Clinker silo #1 baghouse exhaust

Sky Conditions:	Clear		Partly Sunny		Partly Cloudy		Over-Cast	

Precipitation:	Yes			No		Wind Speed ~MPH:	
Temperature		Deg. F				Direction To Source:	N

Layout Sketch:

Sketch the process unit and indicate observer position relative to the source and the sun. Also, indicate the potential/actual emission point of the unit and draw an arrow showing wind direction.

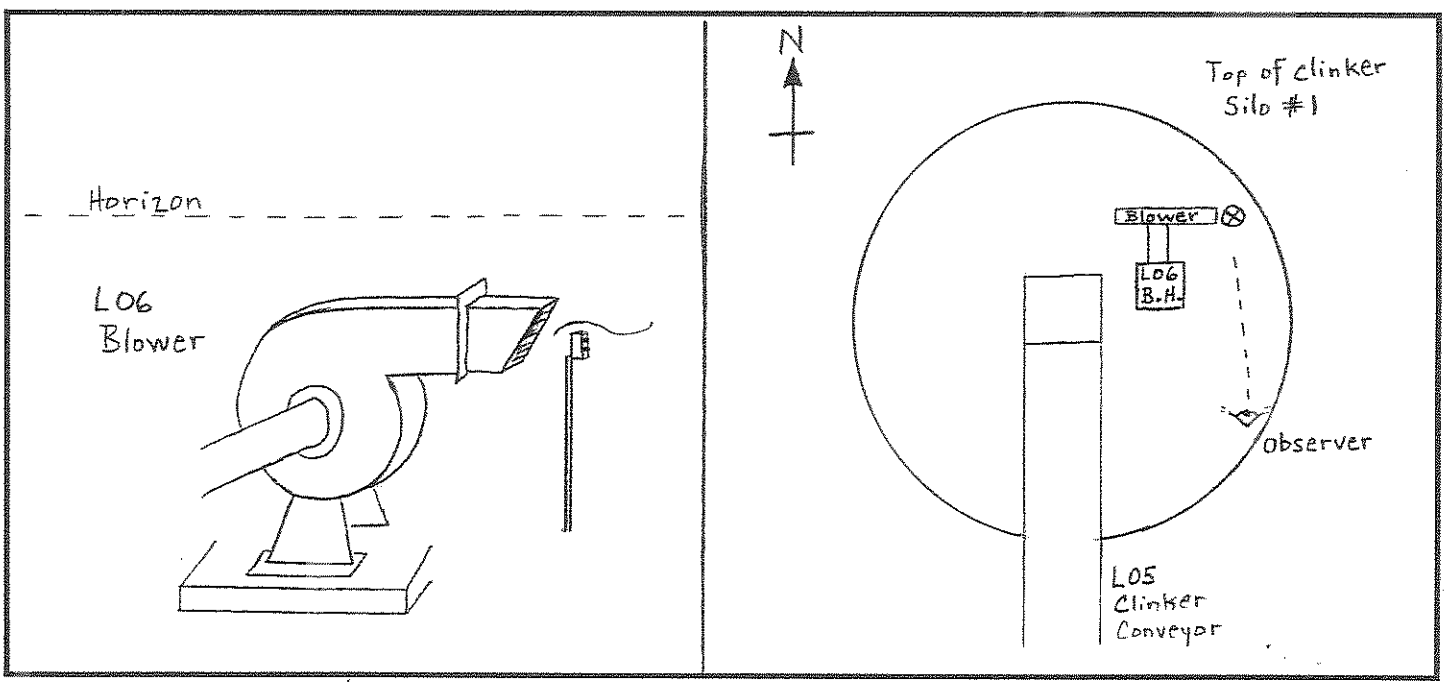

Clock start time of 1-minute observation period: _____ (Indicate a.m. or p.m.)

Was equipment in normal operation? Yes ☐ No ☐

Were visible emissions (except water vapor) observed? Yes ☐ No ☐

(Note: If emissions were observed, notify maintenance and environmental managers immediately.)

Signature of person completing 1-minute observation: _____

Printed name of person completing 1-minute observation: _____

Florida Rock Industries, Inc.--Thompson S. Baker Cement Plant
Method 22 Visible Emissions Form

Process/Unit: Clinker Handling (EU 004, EP 04) Date: _____

Source Equipment No. & Description: L08---Clinker-silo #2 baghouse exhaust

Sky Conditions:	Clear		Partly Sunny		Partly Cloudy		Over-Cast	

Precipitation:	Yes		No		Wind Speed ~MPH:	

Temperature		Deg. F	Direction To Source:	SSE

Layout Sketch:

Sketch the process unit and indicate observer position relative to the source and the sun. Also, indicate the potential/actual emission point of the unit and draw an arrow showing wind direction.

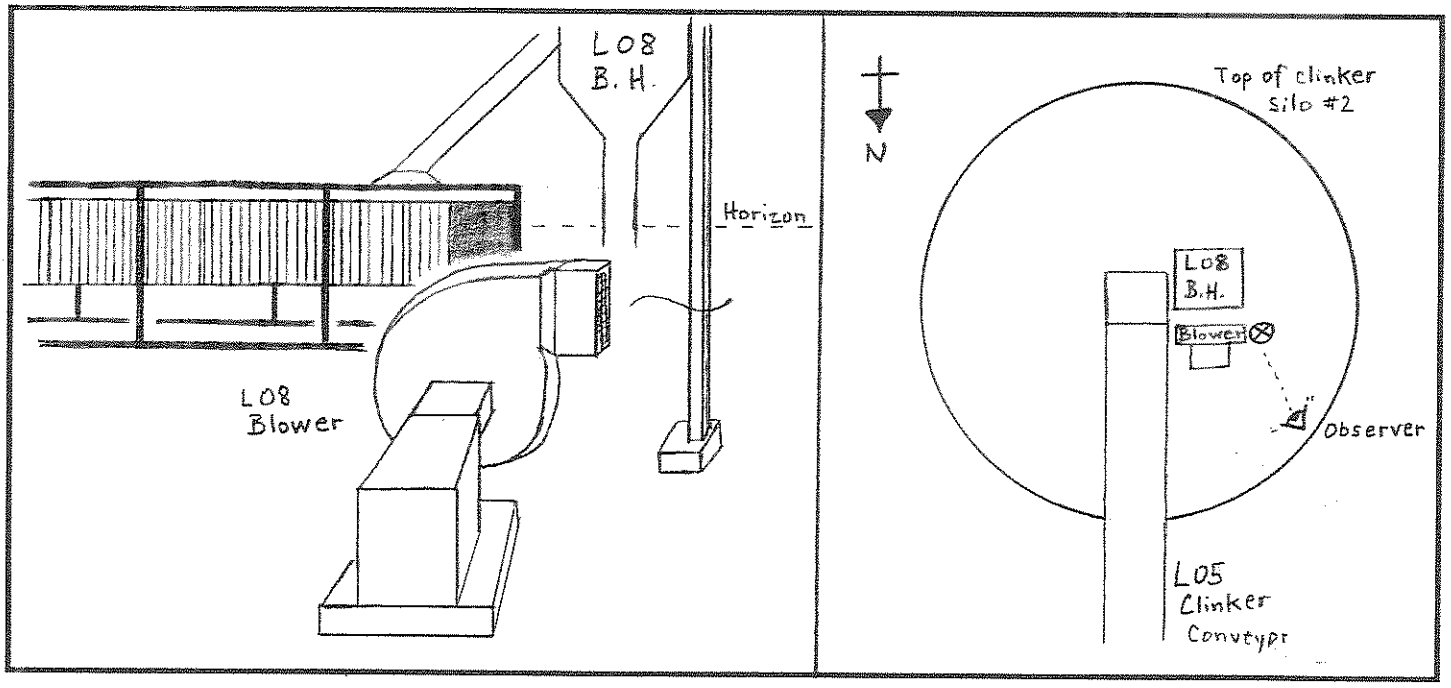

Clock start time of 1-minute observation period: _____ (Indicate a.m. or p.m.)

Was equipment in normal operation? Yes ☐ No ☐

Were visible emissions (except water vapor) observed? Yes ☐ No ☐

(Note: If emissions were observed, notify maintenance and environmental managers immediately.)

Signature of person completing 1-minute observation: _____

Printed name of person completing 1-minute observation: _____

Florida Rock Industries, Inc.--Thompson S. Baker Cement Plant
Method 22 Visible Emissions Form

Process/Unit: Finish Grinding Operations (EU 005, EP 02) Date: _____

Source Equipment No. & Description: M08---Gypsum-conveyor baghouse exhaust

Sky Conditions:	Clear		Partly Sunny		Partly Cloudy		Over-Cast	

Precipitation:	Yes			No	

Wind Speed ~MPH:	

Temperature		Deg. F

Direction To Source:	E

Layout Sketch:
Sketch the process unit and indicate observer position relative to the source and the sun. Also, indicate the potential/actual emission point of the unit and draw an arrow showing wind direction.

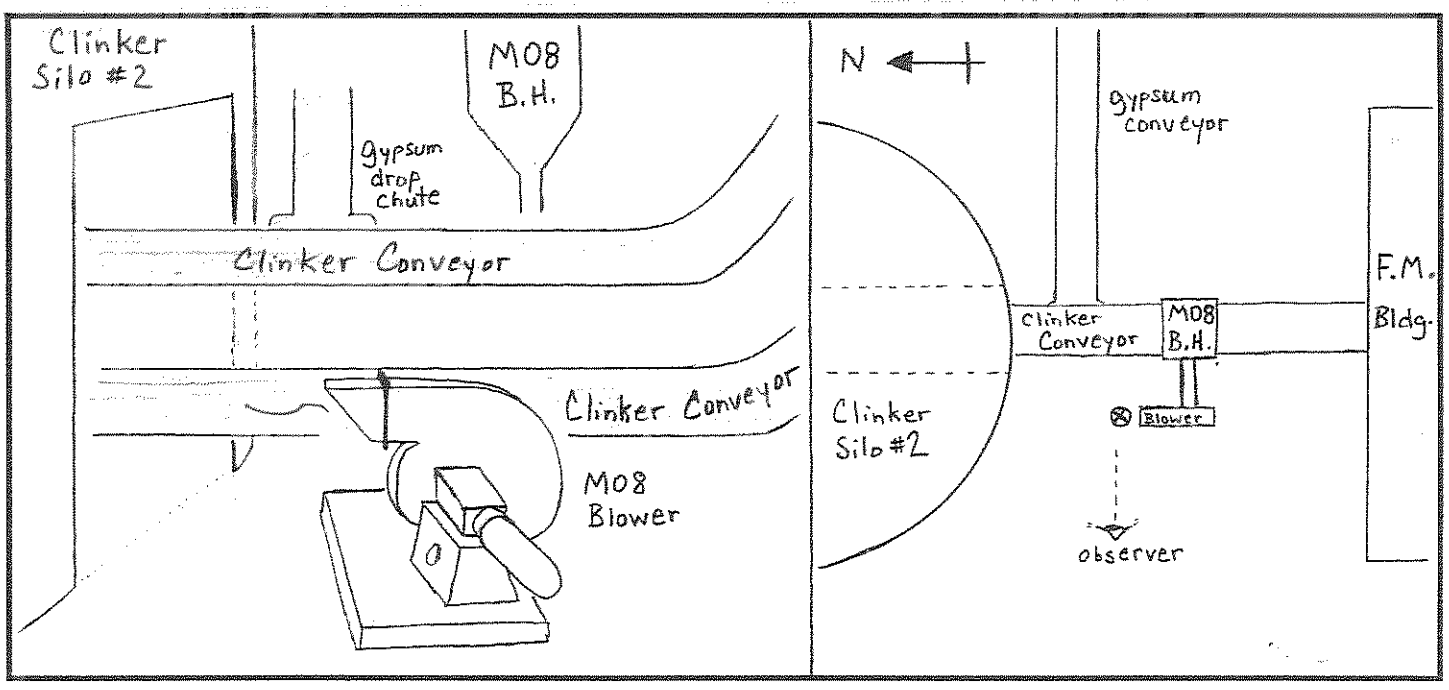

Clock start time of 1-minute observation period: _____ (Indicate a.m. or p.m.)

Was equipment in normal operation?	Yes		No	
Were visible emissions (except water vapor) observed?	Yes		No	

(Note: If emissions were observed, notify maintenance and environmental managers immediately.)

Signature of person completing 1-minute observation: _____

Printed name of person completing 1-minute observation: _____

Florida Rock Industries, Inc.--Thompson S. Baker Cement Plant
Method 22 Visible Emissions Form--Finish Mill

Process/Unit: Finish Mill (Emission Unit No. 005) Date: _____

Source Equipment No.: N09 & N12 (Mill air sweep and separator baghouses)

Sky Conditions:	Clear		Partly Sunny		Partly Cloudy		Over-Cast	

Precipitation:	Yes		No	

Wind Speed ~MPH:	

Temperature		Deg. F

Direction To Source:	~ N.E.

Layout Sketch:

Sketch the process unit and indicate observer position relative to the source and the sun. Also, indicate the potential/actual emission point of the unit and draw an arrow showing wind direction.

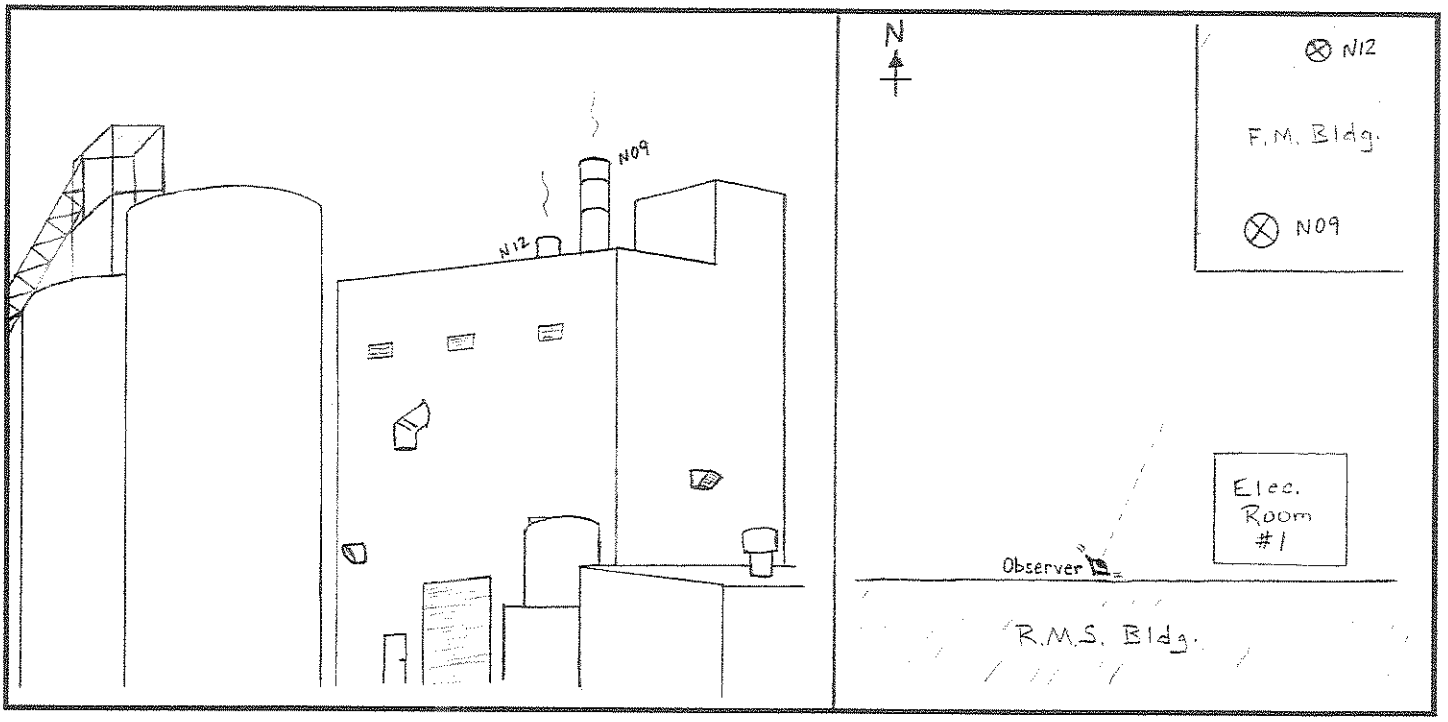

Clock start time of 6-minute observation period: _____ (Indicate a.m. or p.m.)

Was finish mill in normal production?		Yes		No
Were visible emissions (except water vapor) observed?	N09:	Yes		No
	N12:	Yes		No

(Note: If emissions were observed, notify production and environmental managers immediately.)

Signature of person completing 6-minute observation: _____

Printed name of person completing 6-minute observation: _____

Florida Rock Industries, Inc.--Thompson S. Baker Cement Plant
Method 22 Visible Emissions Form

Process/Unit: Finish Grinding Operations (EU 005, EP 06) Date: _____

Source Equipment No. & Description: N91---Bucket-elevator baghouse exhaust

Sky Conditions:	Clear		Partly Sunny		Partly Cloudy		Over-Cast	

Precipitation:	Yes			No		Wind Speed ~MPH:	
Temperature		Deg. F				Direction To Source:	W

Layout Sketch:

Sketch the process unit and indicate observer position relative to the source and the sun. Also, indicate the potential/actual emission point of the unit and draw an arrow showing wind direction.

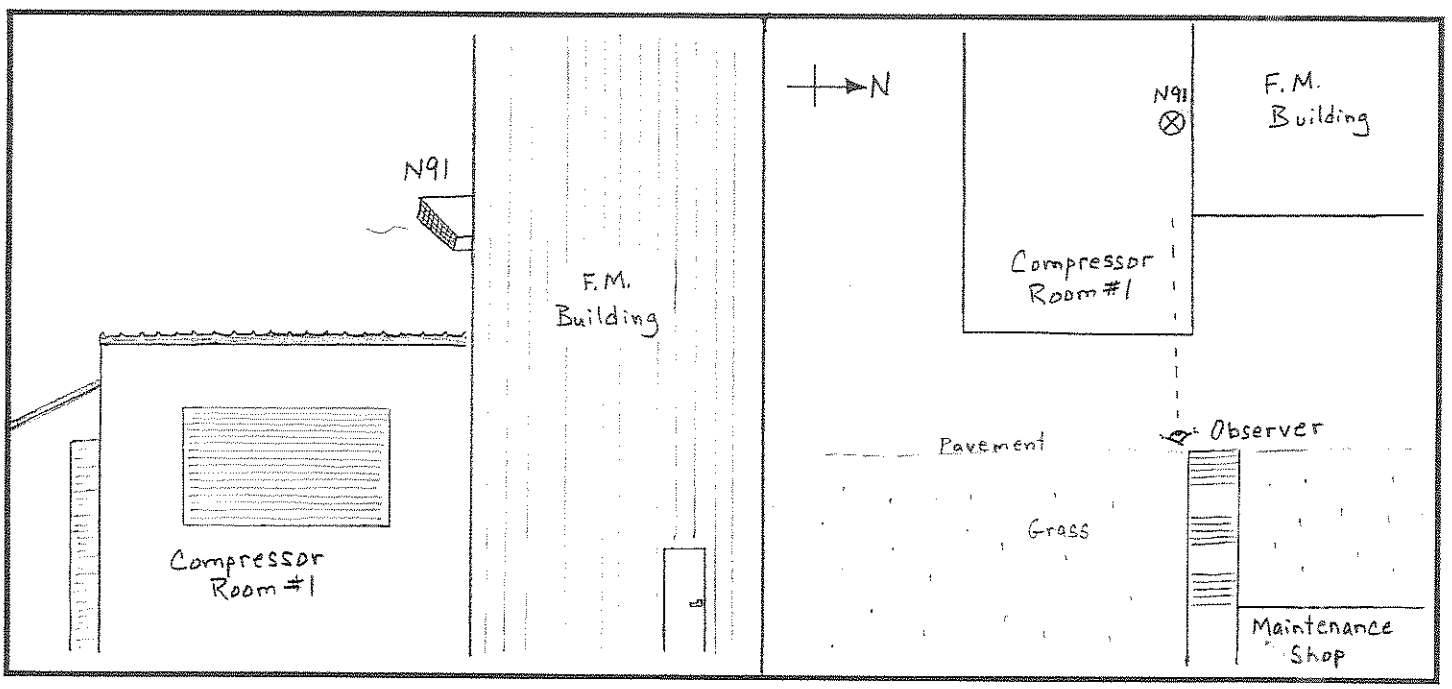

Clock start time of 1-minute observation period: _____ (Indicate a.m. or p.m.)

Was equipment in normal operation? Yes ☐ No ☐

Were visible emissions (except water vapor) observed? Yes ☐ No ☐

(Note: If emissions were observed, notify maintenance and environmental managers immediately.)

Signature of person completing 1-minute observation: _____

Printed name of person completing 1-minute observation: _____

Florida Rock Industries, Inc.--Thompson S. Baker Cement Plant
Method 22 Visible Emissions Form

Process/Unit: Finish Grinding Ops. (EU 005, EPs 06 & 07) Date: _____

Source Equipment No. & Description: Q25 &Q26---E. and W. cement-silo baghouses

Sky Conditions:	Clear		Partly Sunny		Partly Cloudy		Over-Cast	

Precipitation:	Yes			No		Wind Speed ~MPH:	
Temperature		Deg. F				Direction To Source:	ENE

Layout Sketch:

Sketch the process unit and indicate observer position relative to the source and the sun. Also, indicate the potential/actual emission point of the unit and draw an arrow showing wind direction.

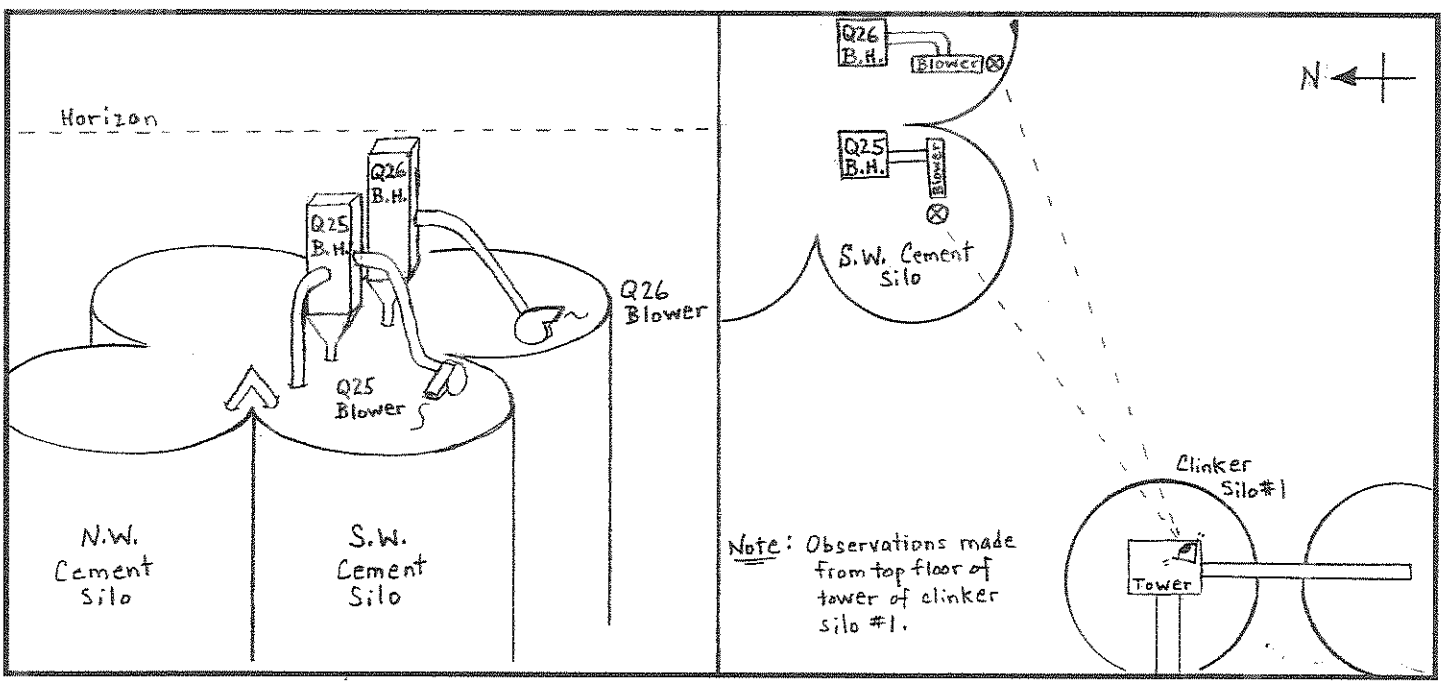

Clock start time of 1-minute observation period: _____ (Indicate a.m. or p.m.)

Was equipment in normal operation? Yes ☐ No ☐

Were visible emissions (except water vapor) observed? Yes ☐ No ☐

(Note: If emissions were observed, notify maintenance and environmental managers immediately.)

Signature of person completing 1-minute observation: _____

Printed name of person completing 1-minute observation: _____

Florida Rock Industries, Inc.–Thompson S. Baker Cement Plant
Method 22 Visible Emissions Form

Process/Unit: Cement Handling (EU 006, EP 01) Date: _____

Source Equipment No. & Description: E. exit of S. truck loadout (Q14 baghouse and Q13 loadout spout).

Sky Conditions:	Clear		Partly Sunny		Partly Cloudy		Over-Cast	

Precipitation:	Yes		No		Wind Speed ~MPH:	

Temperature		Deg. F	Direction To Source:	S

Layout Sketch:

Sketch the process unit and indicate observer position relative to the source and the sun. Also, indicate the potential/actual emission point of the unit and draw an arrow showing wind direction.

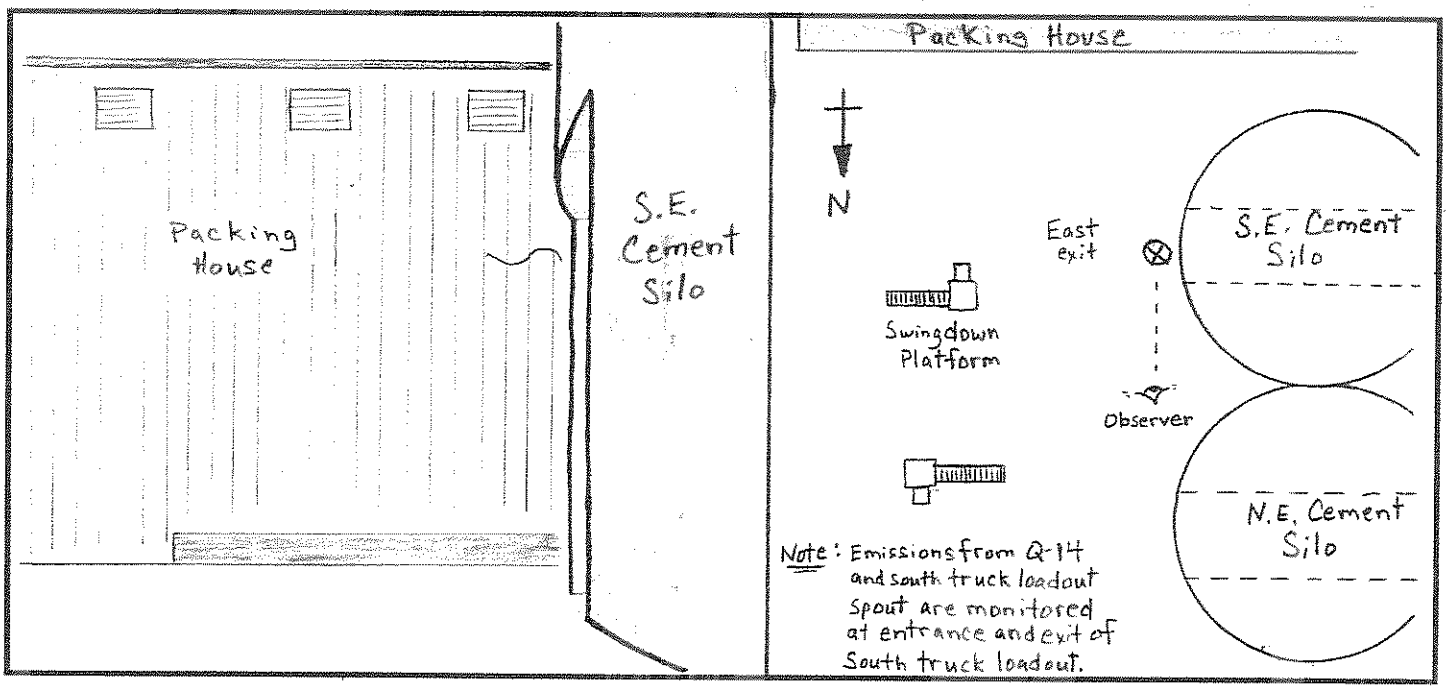

Clock start time of 1-minute observation period: _____ (Indicate a.m. or p.m.)

Was equipment in normal operation? Yes ☐ No ☐

Were visible emissions (except water vapor) observed? Yes ☐ No ☐

(Note: If emissions were observed, notify maintenance and environmental managers immediately.)

Signature of person completing 1-minute observation: _____

Printed name of person completing 1-minute observation: _____

Florida Rock Industries, Inc.--Thompson S. Baker Cement Plant
Method 22 Visible Emissions Form

Process/Unit: Cement Handling (EU 006, EP 01) Date: _____

Source Equipment No. & Description: W. entrance of S. truck loadout (Q14 baghouse and Q13 loadout spout).

Sky Conditions:	Clear		Partly Sunny		Partly Cloudy		Over-Cast	

Precipitation:	Yes			No		Wind Speed ~MPH:	
Temperature		Deg. F				Direction To Source:	S

Layout Sketch:

Sketch the process unit and indicate observer position relative to the source and the sun. Also, indicate the potential/actual emission point of the unit and draw an arrow showing wind direction.

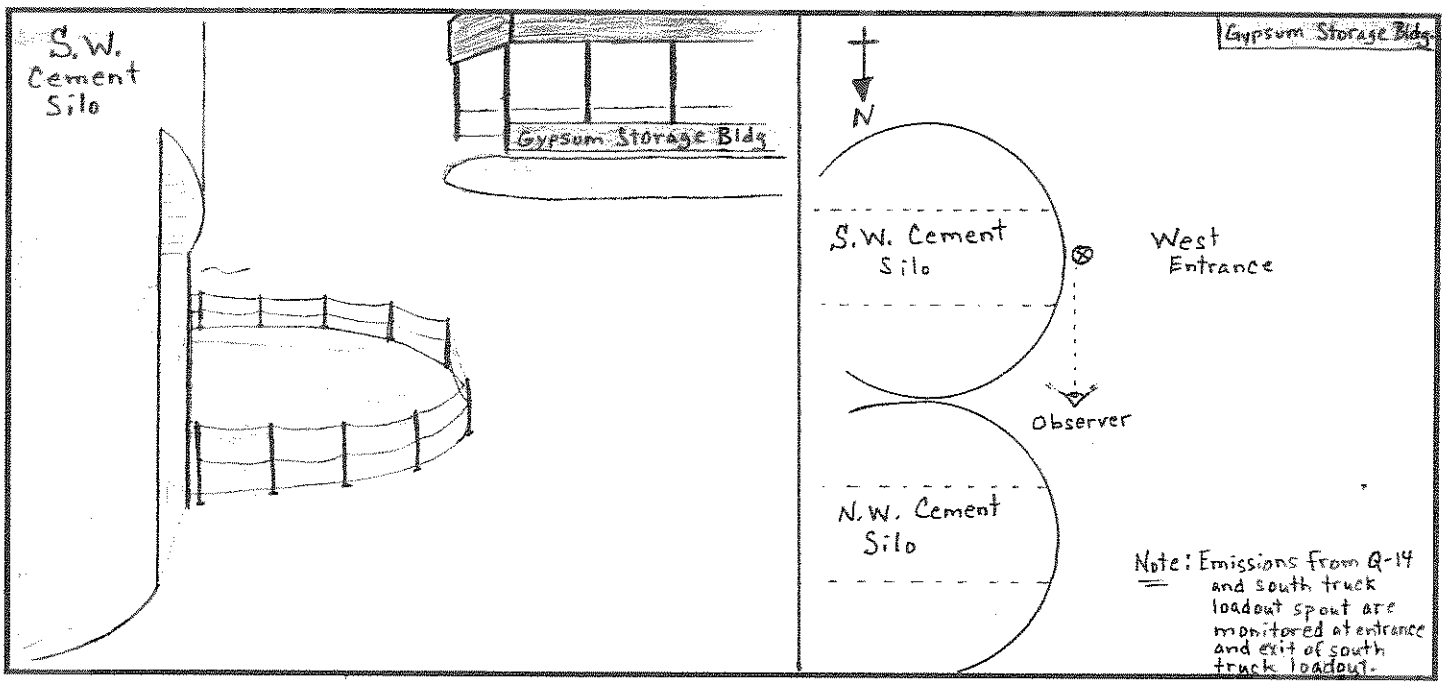

Clock start time of 1-minute observation period: _____ (Indicate a.m. or p.m.)

Was equipment in normal operation? Yes ☐ No ☐

Were visible emissions (except water vapor) observed? Yes ☐ No ☐

(Note: If emissions were observed, notify maintenance and environmental managers immediately.)

Signature of person completing 1-minute observation: _____

Printed name of person completing 1-minute observation: _____

Florida Rock Industries, Inc.--Thompson S. Baker Cement Plant
Method 22 Visible Emissions Form

Process/Unit: Cement Handling (EU 006, EP 02) Date: _____

Source Equipment No. & Description: E. exit of N. truck loadout (Q17 baghouse and Q16 loadout spout).

Sky Conditions:	Clear		Partly Sunny		Partly Cloudy		Over-Cast	

Precipitation:	Yes		No		Wind Speed ~MPH:	

Temperature		Deg. F	Direction To Source:	N

Layout Sketch:
Sketch the process unit and indicate observer position relative to the source and the sun. Also, indicate the potential/actual emission point of the unit and draw an arrow showing wind direction.

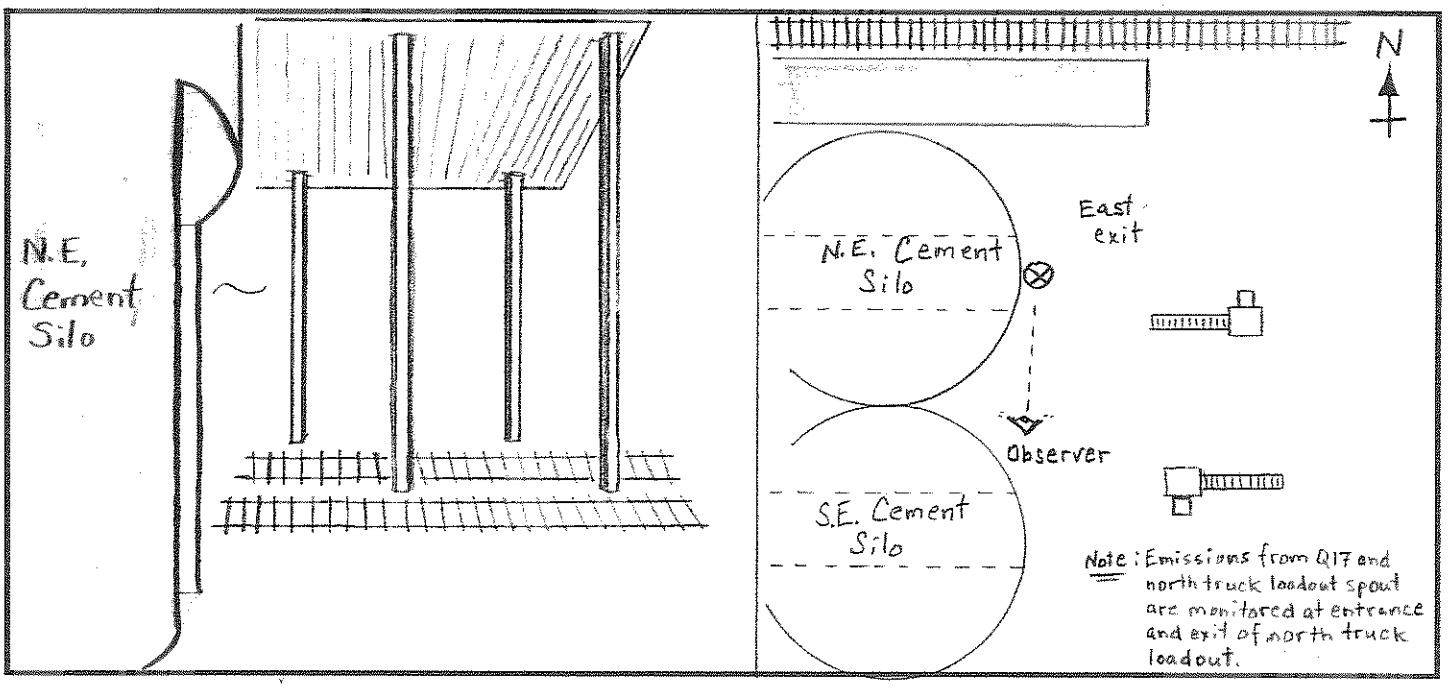

Clock start time of 1-minute observation period: _____ (Indicate a.m. or p.m.)

Was equipment in normal operation? Yes ☐ No ☐

Were visible emissions (except water vapor) observed? Yes ☐ No ☐
(Note: If emissions were observed, notify maintenance and environmental managers immediately.)

Signature of person completing 1-minute observation: _____

Printed name of person completing 1-minute observation: _____

Florida Rock Industries, Inc.–Thompson S. Baker Cement Plant
Method 22 Visible Emissions Form

Process/Unit: Cement Handling (EU 006, EP 02) Date: _____

Source Equipment No. & Description: W. entrance of N. truck loadout (Q17 baghouse and Q16 loadout spout).

Sky Conditions:	Clear		Partly Sunny		Partly Cloudy		Over-Cast	

Precipitation:	Yes			No		Wind Speed ~MPH:	
Temperature		Deg. F				Direction To Source:	N

Layout Sketch:

Sketch the process unit and indicate observer position relative to the source and the sun. Also, indicate the potential/actual emission point of the unit and draw an arrow showing wind direction.

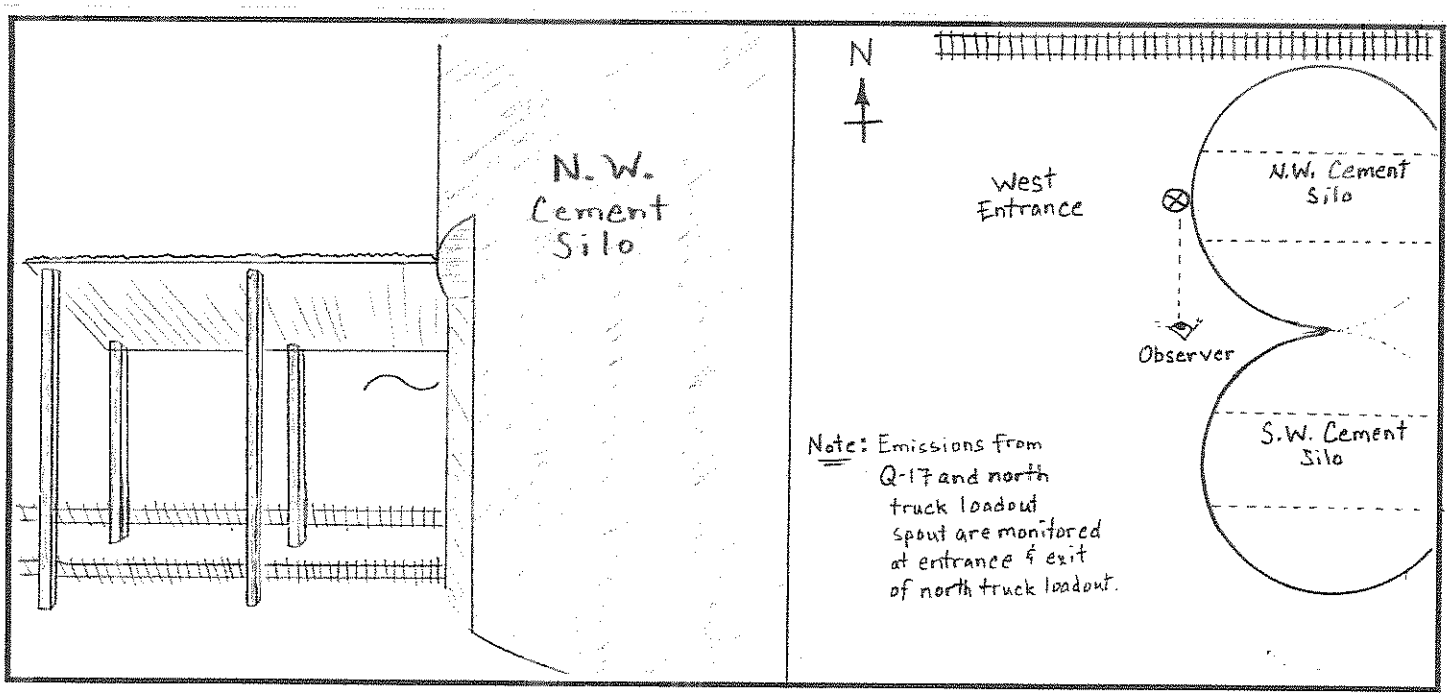

Clock start time of 1-minute observation period: _____ (Indicate a.m. or p.m.)

Was equipment in normal operation? Yes ☐ No ☐

Were visible emissions (except water vapor) observed? Yes ☐ No ☐

(Note: If emissions were observed, notify maintenance and environmental managers immediately.)

Signature of person completing 1-minute observation: _____

Printed name of person completing 1-minute observation: _____

Florida Rock Industries, Inc.--Thompson S. Baker Cement Plant
Method 22 Visible Emissions Form

Process/Unit: Cement Handling (EU 006, EP 03) Date: _____

Source Equipment No. & Description: Q21---Railcar-baghouse exhaust

Sky Conditions:	Clear		Partly Sunny		Partly Cloudy		Over-Cast	

Precipitation:	Yes			No		Wind Speed ~MPH:	

Temperature		Deg. F	Direction To Source:	SSW

Layout Sketch:

Sketch the process unit and indicate observer position relative to the source and the sun. Also, indicate the potential/actual emission point of the unit and draw an arrow showing wind direction.

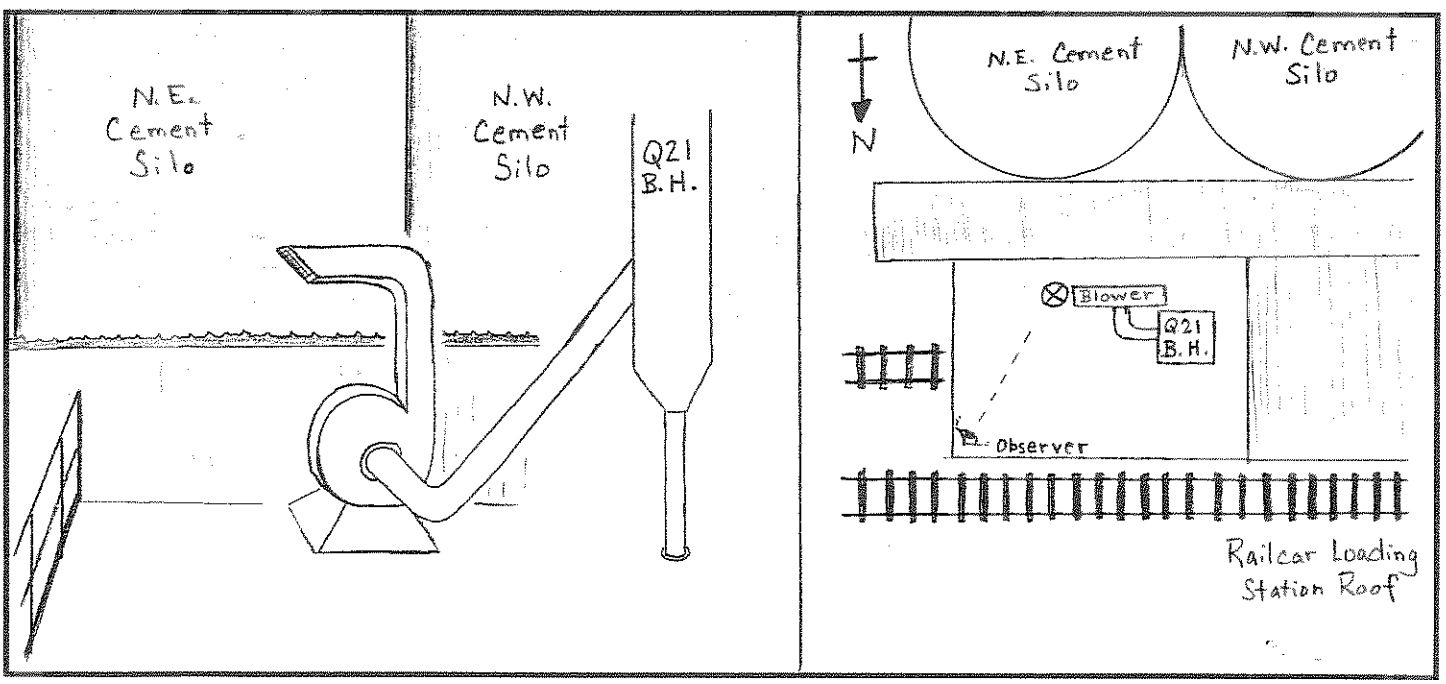

Clock start time of 1-minute observation period: _____ (Indicate a.m. or p.m.)

Was equipment in normal operation? Yes ☐ No ☐

Were visible emissions (except water vapor) observed? Yes ☐ No ☐

(Note: If emissions were observed, notify maintenance and environmental managers immediately.)

Signature of person completing 1-minute observation: _____

Printed name of person completing 1-minute observation: _____

Florida Rock Industries, Inc.--Thompson S. Baker Cement Plant
Method 22 Visible Emissions Form

Process/Unit: Cement Handling (EU 006, EP 04) Date: _____

Source Equipment No. & Description: R12---Bagging-machine baghouse

Sky Conditions:	Clear		Partly Sunny		Partly Cloudy		Over-Cast	

Precipitation:	Yes			No		Wind Speed ~MPH:	
Temperature		Deg. F				Direction To Source:	E

Layout Sketch:

Sketch the process unit and indicate observer position relative to the source and the sun. Also, indicate the potential/actual emission point of the unit and draw an arrow showing wind direction.

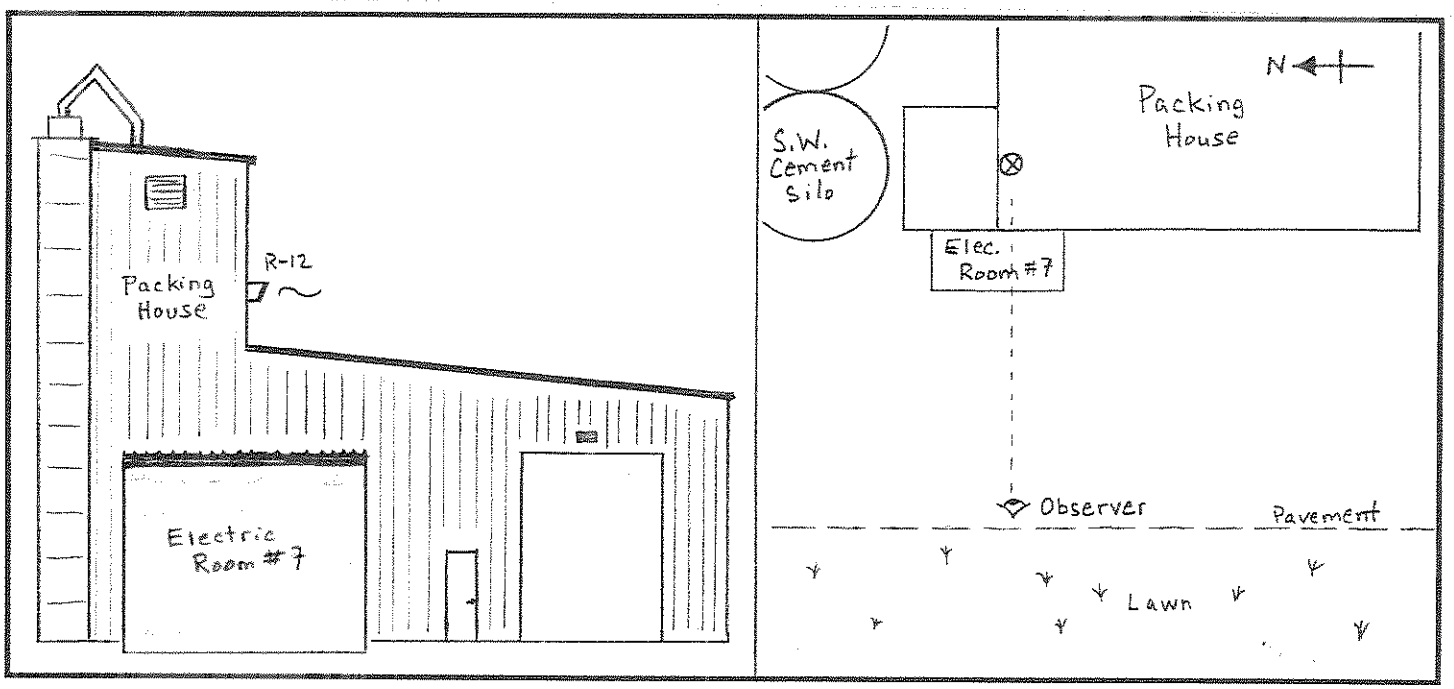

Clock start time of 1-minute observation period: _____ (Indicate a.m. or p.m.)

Was equipment in normal operation? Yes ☐ No ☐

Were visible emissions (except water vapor) observed? Yes ☐ No ☐

(Note: If emissions were observed, notify maintenance and environmental managers immediately.)

Signature of person completing 1-minute observation: _____

Printed name of person completing 1-minute observation: _____

Florida Rock Industries, Inc.--Thompson S. Baker Cement Plant
Method 22 Visible Emissions Form

Process/Unit: Cement Handling (EU 006) Date: _____

Source Equipment No. & Description: Q20---Railcar loadout spout

Sky Conditions:	Clear		Partly Sunny		Partly Cloudy		Over-Cast	

Precipitation:	Yes		No		Wind Speed ~MPH:	

Temperature		Deg. F	Direction To Source:	NNW

Layout Sketch:

Sketch the process unit and indicate observer position relative to the source and the sun. Also, indicate the potential/actual emission point of the unit and draw an arrow showing wind direction.

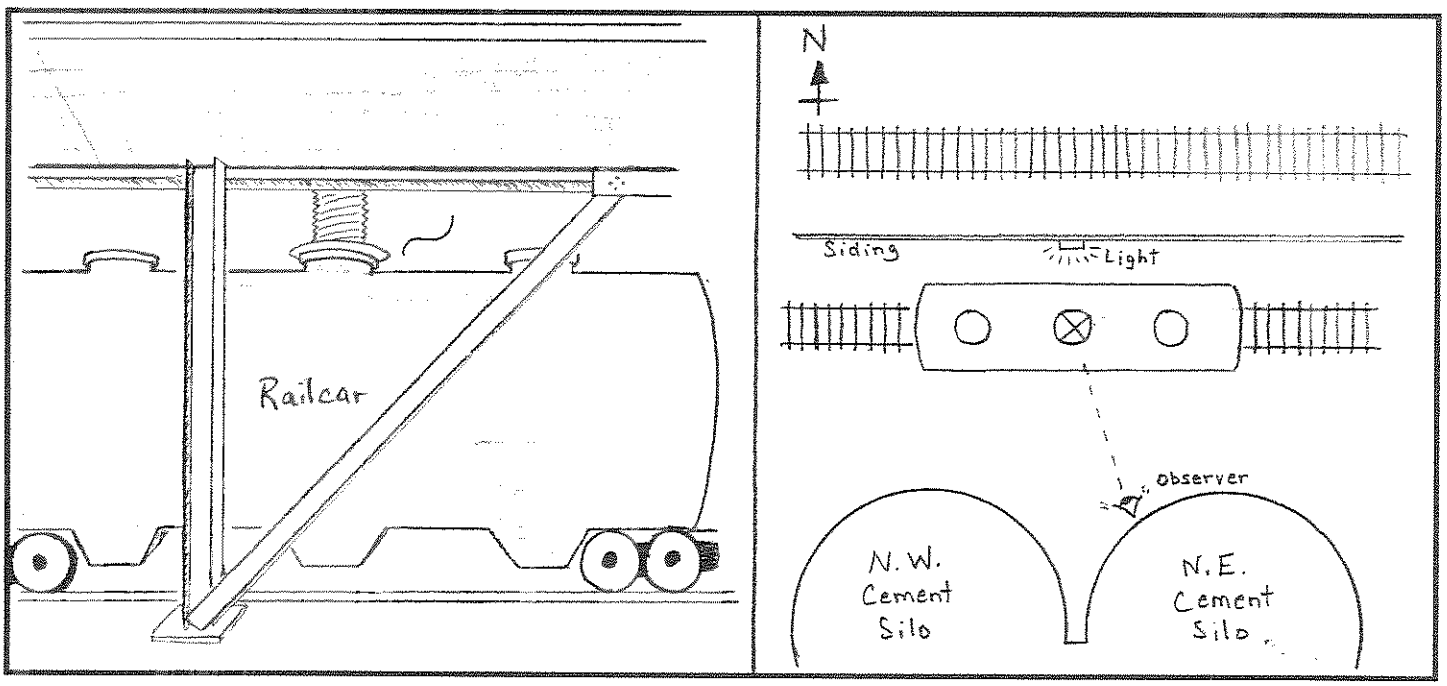

Clock start time of 1-minute observation period: _____ (Indicate a.m. or p.m.)

Was equipment in normal operation? Yes ☐ No ☐

Were visible emissions (except water vapor) observed? Yes ☐ No ☐

(Note: If emissions were observed, notify maintenance and environmental managers immediately.)

Signature of person completing 1-minute observation: _____

Printed name of person completing 1-minute observation: _____

Florida Rock Industries, Inc.--Thompson S. Baker Cement Plant
Method 22 Visible Emissions Form

Process/Unit: Cement Bagging Operations (EU 006) Date: _____

Source Equipment No. & Description: R06---Rotary packer

Sky Conditions:	Clear		Partly Sunny		Partly Cloudy		Over-Cast	

Precipitation:	Yes			No		Wind Speed ~MPH:	n/a

Temperature		Deg. F	Direction To Source:	WNW

Layout Sketch:

Sketch the process unit and indicate observer position relative to the source and the sun. Also, indicate the potential/actual emission point of the unit and draw an arrow showing wind direction.

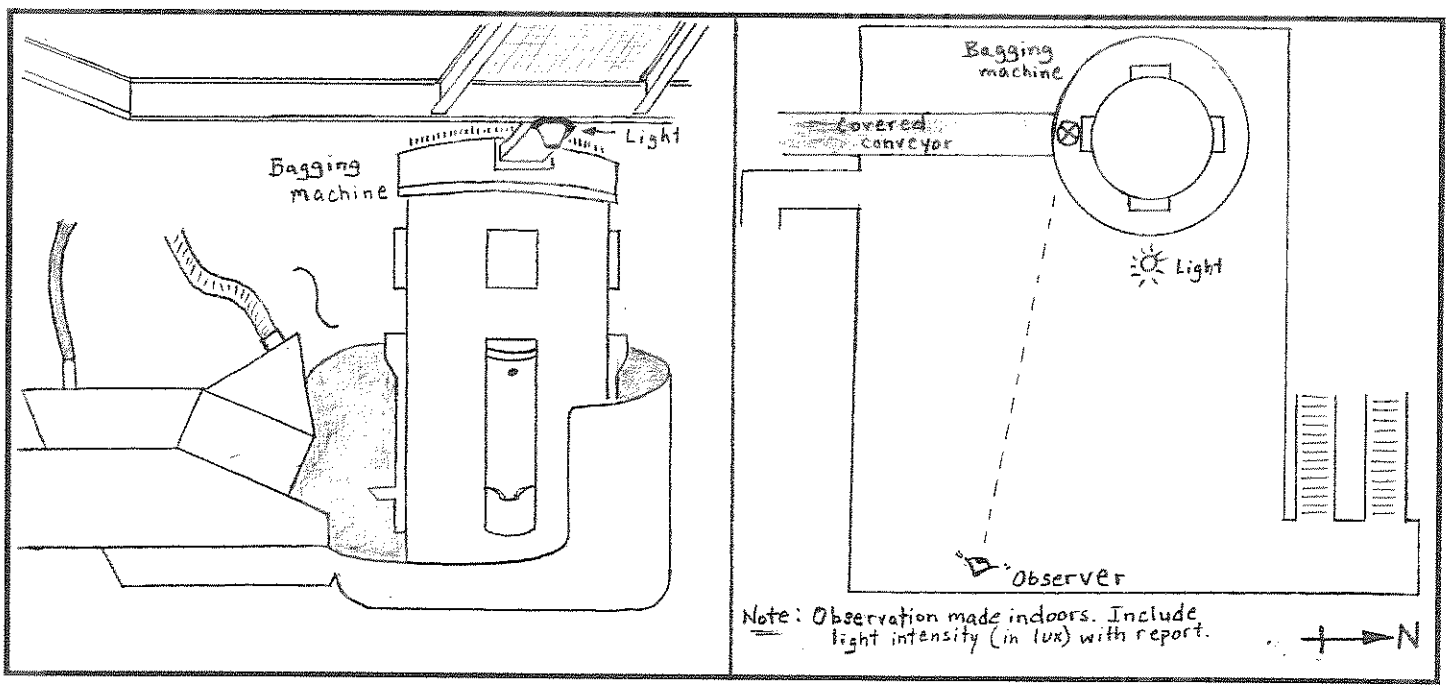

Clock start time of 1-minute observation period: _____ (Indicate a.m. or p.m.)

Was equipment in normal operation? Yes ☐ No ☐

Were visible emissions (except water vapor) observed? Yes ☐ No ☐

(Note: If emissions were observed, notify maintenance and environmental managers immediately.)

Signature of person completing 1-minute observation: _____

Printed name of person completing 1-minute observation: _____

Florida Rock Industries, Inc.--Thompson S. Baker Cement Plant
Method 22 Visible Emissions Form

Process/Unit: Coal Handling and Grinding (EU 007, EP 02) Date: _____

Source Equipment No. & Description: S21---Pulverized-coal storage bin exhaust

Sky Conditions:	Clear		Partly Sunny		Partly Cloudy		Over-Cast	

Precipitation:	Yes			No		Wind Speed ~MPH:	
Temperature		Deg. F				Direction To Source:	N

Layout Sketch:

Sketch the process unit and indicate observer position relative to the source and the sun. Also, indicate the potential/actual emission point of the unit and draw an arrow showing wind direction.

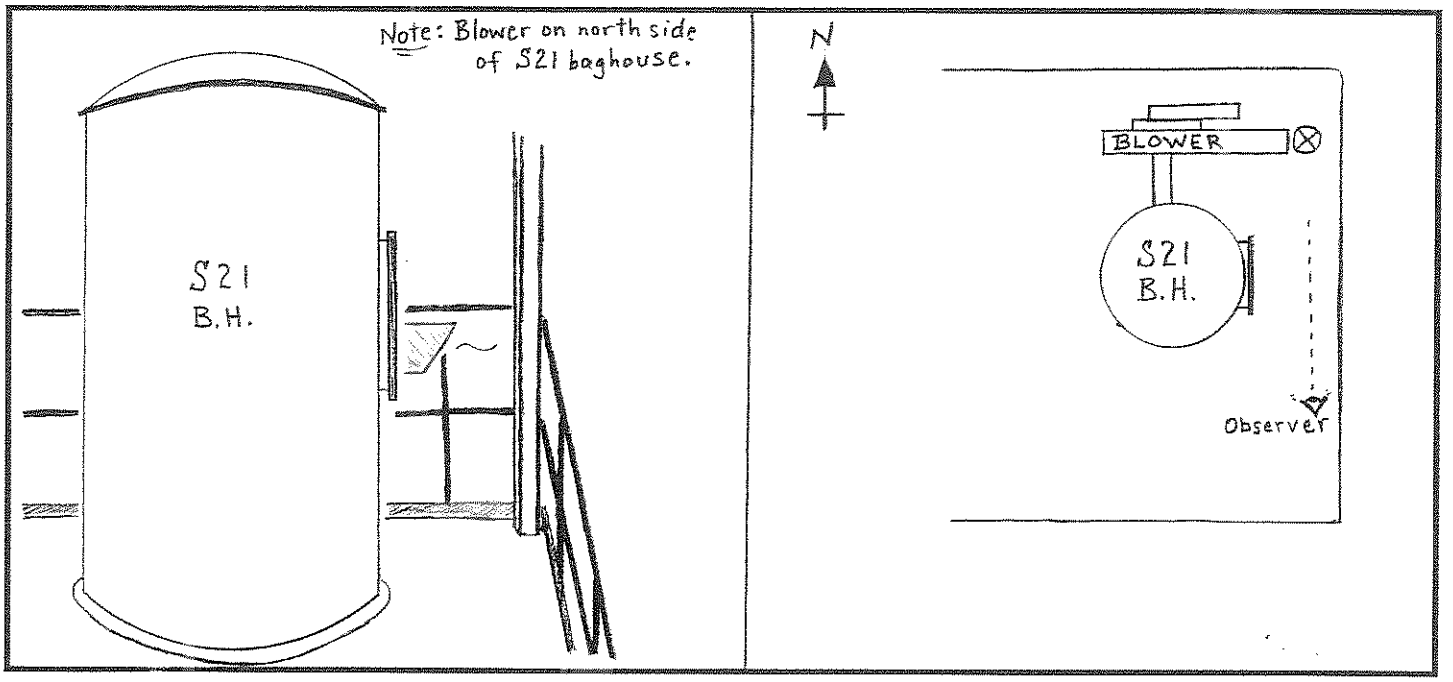

Clock start time of 1-minute observation period: _____ (Indicate a.m. or p.m.)

Was equipment in normal operation? Yes ☐ No ☐

Were visible emissions (except water vapor) observed? Yes ☐ No ☐

(Note: If emissions were observed, notify maintenance and environmental managers immediately.)

Signature of person completing 1-minute observation: _____

Printed name of person completing 1-minute observation: _____

Florida Rock Industries, Inc.--Thompson S. Baker Cement Plant
Method 22 Visible Emissions Form

Process/Unit: _____ Date: _____

Source Equipment No. & Description: _____

Sky Conditions:	Clear		Partly Sunny		Partly Cloudy		Over-Cast	

Precipitation:	Yes		No		Wind Speed ~MPH:	

Temperature		Deg. F	Direction To Source:	

Layout Sketch:
Sketch the process unit and indicate observer position relative to the source and the sun. Also, indicate the potential/actual emission point of the unit and draw an arrow showing wind direction.

Clock start time of 1-minute observation period: _____ (Indicate a.m. or p.m.)

Was equipment in normal operation? Yes ☐ No ☐

Were visible emissions (except water vapor) observed? Yes ☐ No ☐

(Note: If emissions were observed, notify maintenance and environmental managers immediately.)

Signature of person completing 1-minute observation: _____

Printed name of person completing 1-minute observation: _____

Attachment 6

Visible Emission Form (Method 9)

Visible Emission Observation Form

SOURCE NAME			
ADDRESS			
CITY	STATE	ZIP	
PHONE	SOURCE ID NUMBER		
PROCESS EQUIPMENT	OPERATING MODE		
CONTROL EQUIPMENT	OPERATING MODE		
DESCRIBE EMISSION POINT START STOP			
HEIGHT ABOVE GROUND LEVEL START STOP	HEIGHT RELATIVE TO OBSERVER START STOP		
DISTANCE FROM OBSERVER START STOP	DIRECTION FROM OBSERVER START STOP		
DESCRIBE EMISSIONS START STOP			
EMISSION COLOR START STOP	PLUME TYPE CONTINUOUS ☐ FUGITIVE ☐ INTERMITTENT ☐		
WATER DROPLETS PRESENT NO ☐ YES ☐	IF WATER DROPLET PLUME ATTACHED ☐ DETACHED ☐		
POINT IN THE PLUME AT WHICH OPACITY WAS DETERMINED START STOP			
DESCRIBE BACKGROUND START STOP			
BACKGROUND COLOR START STOP	SKY CONDITIONS START STOP		
WIND SPEED START STOP	WIND DIRECTION START STOP		
AMBIENT TEMP. START STOP	WET BULB TEMP	RH,percent	

Source Layout Sketch *Draw North Arrow*

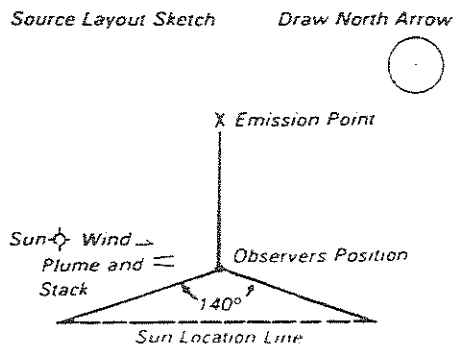

OBSERVATION DATE					START TIME					STOP TIME				
MIN \ SEC	0	15	30	45	MIN \ SEC	0	15	30	45					
1					31									
2					32									
3					33									
4					34									
5					35									
6					36									
7					37									
8					38									
9					39									
10					40									
11					41									
12					42									
13					43									
14					44									
15					45									
16					46									
17					47									
18					48									
19					49									
20					50									
21					51									
22					52									
23					53									
24					54									
25					55									
26					56									
27					57									
28					58									
29					59									
30					60									

AVERAGE OPACITY FOR HIGHEST PERIOD	NUMBER OF READINGS ABOVE % WERE
RANGE OF OPACITY READINGS MINIMUM	MAXIMUM
OBSERVER'S NAME (PRINT)	
COMMENTS	OBSERVER'S SIGNATURE / DATE
	ORGANIZATION
I HAVE RECEIVED A COPY OF THESE OPACITY OBSERVATIONS SIGNATURE	CERTIFIED BY / DATE
TITLE / DATE	VERIFIED BY / DATE

Attachment 7

Record of Maintenance on Air-Pollution Control Device

Report of Maintenance on Air-Pollution Control Device

Subpart LLL (40 CFR 63.10) Recordkeeping--Florida Rock Industries, Inc., Baker Cement Plant

Date of Maintenance: _____

Equipment Type and ID:
(check one)

Baghouse(s)
Precipitator(s)

_____ _____ _____
(name or ID) *(name or ID)* *(name or ID)*

Maintenance Type:
(check one)

Preventive
Routine Repair
Unscheduled Repair

Description of Work: _____

_____
_____
_____
_____
_____

I hereby certify that, to the best of my knowlede, the data and comments on this page are true.

_____ _____
Name (print) Signature

_____
Date

Notes regarding maintenance:

1. Replacement of an air-pollution control device (such as an entire baghouse) requires notification of the regulatory agency. Contact the environmental manager if such replacement is needed
2. It is a violation of the air permit to circumvent (bypass) any air-pollution control device or to allow the emission of air pollutants without the applicable air-pollution control device operating properly.
3. Failures of air-pollution control devices caused by poor maintenance, careless operation, or preventable equipment breakdown are not considered malfunctions and are prohibited.

Retain this original or a copy for five years from date of maintenance.

File: Report of Maintenance on APCD