Environmental Compliance Plan

For

Group III Asphalt, Inc.
Cantonment Plant

7775278

November 2010

Table of Contents

	Page
Introduction	3
Corporate Commitment	4
Operator Training	5
Plant Monitoring	6
Operation and Maintenance Plan	9
Facility Inspections	12
Records	14
Periodic Plan Review	15
Abnormal Events	16
Daily Log Form	17
Crusher Operation	18
Crusher Daily Log	19

Introduction

This plan provides basic information demonstrating the owner's commitment to operating this facility in compliance with DEP Operation Permit requirements and sound environmental principles in general. It also provides reasonable assurance that the continued operation of the facility will stay within such norms.

The detail of this Plan is consistent with the complexity of the system. It was developed in accordance with the unique requirements of this facility and provides the operator with adequate information and description regarding the design, operation and maintenance features. In addition information concerning process control and performance evaluation for the facility, as well as equipment and procedural descriptions (including any notification/report requirements of appropriate agencies) for emergency operating conditions is included. Regular maintenance and repair instructions for plant equipment and monitoring procedures are also included.

Corporate Commitment

Group III Asphalt, Inc. adheres to a strong, facility-wide environmental program and relies on a comprehensive environmental program, which was developed to ensure the highest commitment and quality from the business operation as well as from employees, to protect and enhance the environment. This program includes an environmental policy, environmental auditing procedures and employee education and involvement. All managers realize that it is just good business sense to protect the environment.

Operator Training

This Plan represents continuing education program for all plant operators concerning plant operation, permit and other regulatory requirements. A copy of the approved Plan will be available to the operators, maintenance personnel, technicians, and laboratory personnel.

Personnel are trained to operate facility in accordance to factory training manual(s) and this Plan. Consequently, new employees will be trained within 90 days after commencement of employment and prior to unsupervised equipment operation. In addition periodic safety meetings are required for all plant personnel and often cover environmental topics including air permit requirements.

Environmental education is key to maintaining successful environmental stewardship. Education includes new operator's orientation and training sessions. During orientation, new hires are educated about the various permits, permit conditions and monitoring requirements.

The training sessions teach personnel about dust control, waste management, spill prevention, air permits and other environmental topics. These training sessions are intended to teach plant management the environmental issues so they, in turn, teach their employees.

Plant operators also get trained on how to read opacity from their stacks, which of course, is very important when running the asphalt plant.

Plant Monitoring

This section establishes the use of parameters to monitor plant operation such as pressure differentials and visible emissions. The Company conducts reasonable monitoring to assure compliance with the terms and conditions of their permit. The monitoring will be carried out in the manner prescribed in this procedure.

The performance parameters include such physical, chemical or electrical characteristics as are applicable to particular emissions unit and which are indicators of the condition, operating rates and efficiencies. Such parameters generally include the following indicators for baghouses:

Bag pressure drop
Gas flow rate
Air to cloth ratio
Bag weave
Bag material
Gas temperature, inlet and outlet
Condition of bags
Frequency of reverse airflow operation

The operating protocol addresses the physical steps and procedures to be followed by the operator when monitored parameters are outside the typical operating range. Proper operation of baghouse dust collector requires the use of differential pressure gauges (such as magnehelic) that can indicate a sudden decrease in pressure (a system leak) or a sudden rise in pressure (binding or plugging problems). U-tube manometers can also be used to help identify problems with dampers and bags by indicating the difference in the pressure across the baghouse. A magnehelic gauge or manometer indicates the pressure differential across the filter elements in inches of water.

All asphalt plants create fine dust carryout from drum dryer. In order to meet Federal and State air quality codes, emission control equipment is necessary to capture particulate emissions that might otherwise be released into the atmosphere. During the dust filtering operation exhaust air from the drum-mix blows through filtering media contained inside the baghouse.

Resistance resulting from such flow is called pressure drop and is measured in inches of water. In order for a filtering media to filter dust properly such pressure drop must be maintained within specific limits specific to individual baghouse. In order to maintain correct pressure differential across filtering bags, a cyclic timer periodically actuates the reverse air flow system which reverses portion of exhaust air back into portion of baghouse causing filtering elements to clean.

Generally the operating parameters of the baghouse type pollution control equipment to be monitored are as follows:

Pressure drop (Delta P) across baghouse
"Visible emissions

The pressure drop across the baghouse is a useful parameter to monitor baghouse performance. A given baghouse will operate within a pressure drop range.

A pressure drop much lower than the lower end of the operating range could indicate:

New bags which have not developed a filter cake
Bag failure
Baghouse structural failure
Ductwork structural failure.

A pressure drop much higher than the upper end of the operating range could indicate:

Plugged bags
Blocked stack
Fan malfunction
Plugged ductwork

This plan provides for monitoring of baghouse pressure drop. Known data have been established to indicate typical operating range of pressure drop for this baghouse. Any values noted which fall significantly outside this range will be noted. An appropriate investigation will follow to determine the cause of the variation and to evaluate any attendant effect on visible emissions.

Additionally, the permit requires annual particulate matter testing using EPA Method 5, to determine compliance with DEP rules and the New Source Performance Standard. Each such annual testing event will provide an opportunity to evaluate a possible correlation between baghouse pressure drop, opacity and particulate matter emission rate. A daily observation of stack gas opacity will be conducted by the plant operator, as part of the daily inspection (see Facility Inspections).

The pressure drop (Delta P) across the baghouse will be monitored at least once during each day of plant operation. The Delta P value will be logged on the plant's daily production report. The numerical value of this parameter, in units of water, will be determined by a magnehelic gauge.

Operation and Maintenance Plan

This section establishes a plant specific Operations and Maintenance (O & M) Plan. This element provides reasonable assurance that this facility can be effectively operated and maintained, through reasonable provisions for the operation and maintenance of the facility. Routine maintenance of equipment will be performed as needed to assure optimal operation. The facility shall be operated to control objectionable odors in accordance with Rule 62-296.320(2), F.A.C. Fuels, solvents, lubricants and other maintenance materials shall be stored in approved areas.

This plan includes a schedule for the maintenance and inspection of the control device and collection system and schedule for recording performance parameters of the control device. The Operation and Maintenance Plan included identification of the control device for each emissions unit subject to provision of Plan, including the following design specifications and other descriptive data:

Drum Mix Plant: CMI, Model E3 300P ,. :
Baghouse: CMI Model RA 318 DTD
Type: Reverse Air Flow
Flow rate (gas): 38,522 ACFM at average temp of 243 F (as recorded during PM test)
Efficiency rating at design capacity: 99.9%
Pressure drop: 3.7" W.G (during PM test)
Operating range: 1-5" W.G.

Plan also includes performance parameters that indicate the rate of operation, process production rate and fuel description. Such parameters include the following:

Weight per unit time of asphalt concrete produced in: **300 TPH**
Dryer Burner fuel: No. 2 distillate, No. 4 fuel oil or on-spec used oil with max. sulfur content of 0.6%.

Startup of baghouse:

Start all electric drive components to ensure proper rotation

Check and make sure that cleaning of filtering system is operating

Check and make sure that filtrates removal system from baghouse hopper is operating properly.

Run exhaust fan and check to see that magnehelic gauge lines are hooked up correctly.

At start-up, preheat baghouse to 300 F before aggregate is introduced into dryer. Preheating time will vary according to ambient temperature and moisture conditions at plant site. NOTE: This should be done first thing in the morning and then again only after prolonged shutdowns during the day (30 minutes or more).

Minimum inlet temperature to baghouse should never be allowed to fall below 240 F or condensation may occur inside the baghouse causing bag mudding, bind with a result of very high static pressures and loss of adequate draft for proper dryer operation.

Shutdown of baghouse

At shutdown, always keep timer and augers operating after dryer shutdown to clean out baghouse. This will prevent a cold slug of dust from reaching the plant at next start-up. Also the dust auger could be stalled if slugged with cold, wet dust.

If at any time a constant stream of dust is being emitted from the fan stack, check for a mechanical leak or worn/torn bag(s). If a leak develops, the area can usually be easily spotted from the clean airside by a large deposit of dust around the leak area. Should a leak develop, clean dust from area and reseal both sides of leak with RTV732 silicone sealant or equivalent. This type of sealant is required to withstand the high temperatures of a baghouse.

Access doors allow for maintenance personnel to enter the baghouse equipment for leak detection, filter bag changes and proper identification of operational problems. These doors need to create a positive seal to reduce

baghouse or ambient air intake and heat loss on all negative systems. They also need to seal properly to reduce condensation that can cause filter bag damage and severe metal corrosion. To prevent air infiltration and insure a positive contact between the door and seal and door pan, a proper door seal material must be used. There are various materials designed to meet the specific needs of door applications based on gas chemistry, temperature and door configurations. Check seals periodically and whenever the baghouse is opened for repairs or change outs.

Routine maintenance includes:

WEEKLY

Apply grease to all grease fittings

Adjust all belt tensions

MONTHLY

Blow out differential pressure gauge lines

ANNUALLY

Shut down the plant's operations each year to conduct preventive maintenance procedures

These preventive maintenance procedures include changing the bags in the baghouse as needed and turning the burner for maximum burner efficiency as needed.

Facility Inspections

This element describes the use of periodic facility "walk-through inspections" by plant staff with specific inspection guidelines. The condition of facility will be noted and compared to its condition during the initial survey and during subsequent inspections.

Daily inspections are made by plant operator prior to plant startup to make sure emission control components are in good working order. Proper maintenance and record keeping play a vital role in the operation of a baghouse. The information gathered can assist in implementing an effective preventive maintenance program. The documentation of inspections, observations and maintenance will help determine the baghouse operating efficiency and help prevent a plant from reaching noncompliance status.

Routine observations of the pollution control device are:

DAILY

Record Differential Pressure
Check operation and frequency of reverse air flow system.
Check baghouse filtrates conveying system
Check for visible stack emissions
Check for miscellaneous visible emissions throughout plant

MONTHLY

Check access door seals for leaks
Check door seals for deterioration

SEMI-ANNUALLY

Inspect all accessible functional spaces
Record frequency of reverse flow operation
Check bag conditions (dirty side)
Check fan
Check all belt tensions

ANNUALLY

Check case support for corrosion
Check all bolts and welds
Check ductwork for buildup of dust

Records

Records of inspections, maintenance and performance data of control devices and auxiliary equipment shall be retained for a minimum of five years and shall be made available to DEP upon request. These records are retained at the plant office.

Records that should be kept regularly include baghouse pressure drop. Recordings are maintained to be used in comparison to current baghouse data.

Records requirements shall include:

Records of control equipment operating parameters

Records of control system malfunctions or failures and corrective actions taken

Results of compliance tests required by DEP shall be reported to DEP within 45 days after completion of the test.

Periodic Plan Review

This plan will be reviewed at least annually from date of approval. This review will evaluate the effectiveness of the Plan and will make any changes necessary for the Plan to be continuously administered.

The Environmental Compliance Plan shall be updated as operations change, but no less frequently than upon renewal of permit. DEP shall be notified of changes to this plan other than those required for routine maintenance. The Environmental Compliance Plan shall be revised when operational procedures change, to reflect any facility alterations performed or to reflect experience resulting from facility operation. The Company will periodically review and revise the operating protocol, as appropriate, to ensure satisfactory system performance.

Abnormal Events

In the event the Company is temporarily unable to comply with any of the conditions of DEP permit due to breakdown of equipment, power outages, and destruction by hazard of fire, wind or other cause, the Company will notify DEP. Notification shall be made in person, by telephone, or other means within 24 hours of breakdown or malfunction. The telephone number to call to notify DEP is **(850) 595-8364 ext. 1220**. For emergencies involving a significant threat to human health or the environment, the number is **(850) 320-0519.**

A written report of any noncompliance referenced above shall be submitted to the **Florida Department of Environmental Protection, 160 Governmental Center, Pensacola, FL 32502-5794,** within 30 days after its occurrence. The report shall describe the nature and cause of the breakdown or malfunction, the steps being taken or planned to be taken to correct the problem and prevent its reoccurrence, emergency procedures in use pending correction of the problem and time when the facility will again be operating in accordance with permit conditions.

If an emergency arises or there is any condition, which prevents the continued operation of the emissions control components or results in non-compliance with applicable regulations, the operator will:

Stop production immediately

Notify Area Superintendent(s), as soon as practically possible, of the time, date and nature of the occurrence and the corrective action(s) taken

Ensure that the emission control components are in good working order before resuming production.

Group III Asphalt, Inc.
Cantonment Plant

Daily Log

Date: _____

Tons Mixed: _____

Hours Operated: _____

Average tons/hr (tons/hours): _____

Daily Checks

Magnehelic Reading: _____"W.G.

Stack Visible Emissions Present: _____yes _____no

Reverse Airflow system operating. _____yes _____no

Baghouse filtrates conveying system operating:: _____ yes _____ no

_____ _____
(date) (Plant Manager)

Crusher Operation

For each day an AG (Air General) permitted crusher operates on this site the attached form must be completed and a copy kept on site.

Crusher Daily Log

Date: _____

Operator: _____

No. of buckets crushed: _____

Average weight of bucket load:- _____ tons

Total tons crushed = no. of buckets x weight of bucket:

_____ x _____ tons = _____ tons/day

Hours Operated: _____

Average hourly production: tons per day / hours operated

_____ /_____ = _____ av TPH

Fuel Usage: 20 gal/hr for crusher + 10 gal/hr for screen = 30 gal/hr

30 gal/hr x _____ hr operated = _____ est. gal fuel used.

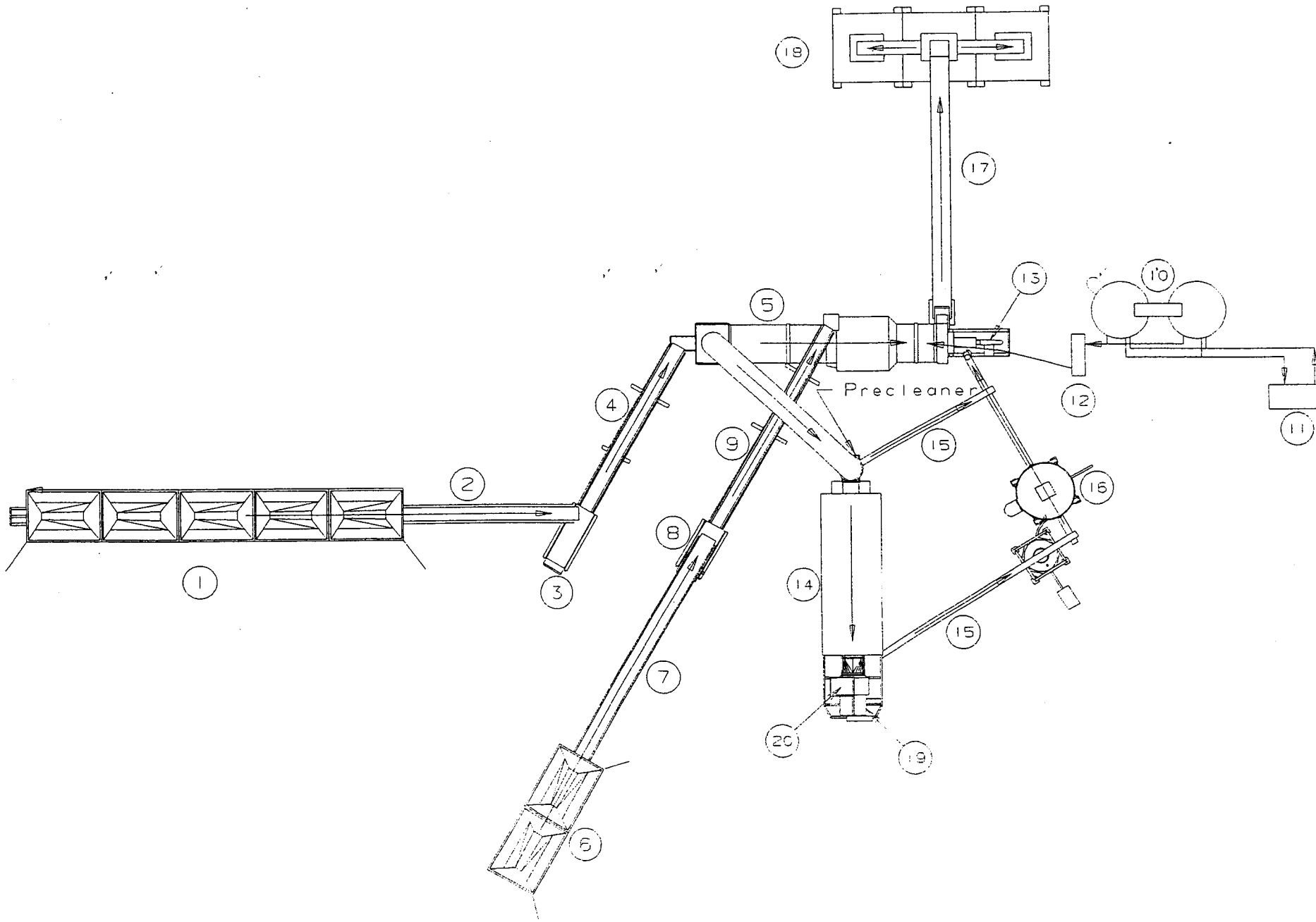
18
17
13
10
5
Precleaner
12
11
4
9
15
2
16
8
1
3
14
15
7
20
19
6

PROCESS FLOW FOR HOT MIX ASPHALT PRODUCTION IN A COUNTER FLOW DRUM MIXER

The purpose of this process and its assemblage of equipment is to produce hot mix asphalt paving mixtures for highways, streets and other surfaces. These mixtures, a carefully formulated blend of aggregates and asphalt cement, are normally delivered into transport vehicles from storage silos at a temperature of 270 to 300 degrees F.

Virgin mineral aggregates utilized are normally sand plus crushed gravel or quarry stone. Other aggregates including crushed blast furnace slag and reclaimed concrete may be used under specified conditions. Asphalt cement (AC), a residual product obtained from crude oil refining, is the adhesive and waterproofing medium which binds the aggregate.

A portion of the paving mixture may be recovered asphalt product (RAP), which is old asphalt paving which has been removed, usually by milling, from an existing roadway.

Process materials are delivered to the plant site by truck. Aggregates are stockpiled by size. RAP is also separately stockpiled. Liquid asphalt is pumped from delivery tankers in to the AC storage tank(s). Fuel is pumped into appropriate storage vessels from delivery tanks. Where natural gas is used as fuel, it is withdrawn as needed from pipeline systems. All other items such as heat transfer oil, lubricants, and maintenance materials are stored in appropriate areas.

Cold Feed Bins (Item 1) and RAP Bin (Item 6) are charged as required from respective stockpiles, usually by a front end loader.

Coarse and fine virgin aggregates are withdrawn from their respective bin compartments (Item 1) in predetermined proportions to produce the aggregate gradation and total rate required, then transported on the gathering conveyor (Item2) to the virgin aggregate scalping screen (Item 3). If there is no RAP addition, the virgin aggregate will comprise approximately 95% of the system process inputs. When RAP is being introduced, the virgin aggregate proportion will be reduced to approximately 50 to 95% of the total inputs. The scalping screen (Item 3) removes oversize material and foreign objects which may have found their way into the stockpiles. The virgin aggregate is continuously weighed as it is transported by belt conveyor (Item 4) to the counter flow drum mixer (Item 5). Automatic adjustment is made to virgin aggregate feeders to maintain the required feed rate set by the plant operator.

When RAP is included in the mix formula, it is metered from its bin (Item 6) at the required rate and delivered by belt conveyor (Item 7) to the RAP scalping screen (Item 8) which removes oversize clumps. The RAP is then continuously weighed as it is transported on the RAP belt conveyor (Item 9) to the counter flow drum mixer (Item 5) RAP inlet. Automatic feeder adjustments maintain required feed rates.

AC constitutes approximately the remaining 5% of process inputs. AC is stored in the AC storage tank (Item 10) where it is maintained at approximately 300 degrees F by the heater (Item 11). Delivery of AC into the counter flow drum mixer (Item 5) is controlled by the AC metering unit (Item 12) which is monitored by the plant control system to insure correct asphalt content in the mix.

Virgin aggregate enters the mixer through the exhaust gas breaching. It is heated and dried by heat released from the controlled combustion of fuel in the extended body burner (Item 13). This burner may be fueled by natural gas, liquid propane, or fuel oil. By the time the virgin aggregate has progressed through the drying/heating section to the combustion zone, it is dry and will be superheated. Bypassing the combustion envelope, the hot virgin aggregate reaches the RAP inlet. The cold wet RAP is now mixed with the hot virgin aggregate and becomes heated and dried by heat exchange. The virgin/RAP blend now passes through the mixing zone of the drum mixer where the AC, pumped by the metering unit (Item 12), and the aggregate fines, recovered in the baghouse (Item 14) and delivered by the dust return system (Item 15), are mixed with the aggregate blend. The mixing zone location beyond the combustion zone reduces asphalt droplet carryout. All VOCs released must pass through the combustion zone where they are partially consumed.

The dust return system (Item 15) conveys heavy dust fines back to the drum mixer (Item 5). Light fines may be directly returned, wasted, or pneumatically loaded to the dust storage silo (Item 16). Light fines may then be metered back into the blend as pavement specifications dictate.

Hot mix asphalt is discharged into the elevating drag conveyor (Item 17) which transports it into the mix storage silos (Item 18) to await truck load out requirements.

The other discharge from the counter flow drum mixer (Item 5) is the exhaust gas which is drawn into the baghouse (Item 14) by the induced draft fan (Item 19). The Nomex Fabric Filter Bags in the baghouse allow gases to pass through while collecting particulates larger than a few microns. A reverse pulse system causes the collected fines to fall into the collecting hopper for recovery through the dust return system (Item 15) as previously described.

After passing through the filter fabric, the exhaust gases are drawn into the induced draft fan (Item 19) and then discharged to the atmosphere through the exhaust stack (Item 20).