Appendix C to Part 63—Determination of the Fraction Biodegraded (F_{bio}) in a Biological Treatment Unit

I. Purpose

The purpose of this appendix is to define the procedures for an owner or operator to use to calculate the site specific fraction of organic compounds biodegraded (F_{bio}) in a biological treatment unit. If an acceptable level of organic compounds is destroyed rather than emitted to the air or remaining in the effluent, the biological treatment unit may be used to comply with the applicable treatment requirements without the unit being covered and vented through a closed vent system to an air pollution control device.

The determination of F_{bio}shall be made on a system as it would exist under the rule. The owner or operator should anticipate changes that would occur to the wastewater flow and concentration of organics, to be treated by the biological treatment unit, as a result of enclosing the collection and treatment system as required by the rule.

Unless otherwise specified, the procedures presented in this appendix are designed to be applied to thoroughly mixed treatment units. A thoroughly mixed treatment unit is a unit that is designed and operated to approach or achieve uniform biomass distribution and organic compound concentration throughout the aeration unit by quickly dispersing the recycled biomass and the wastewater entering the unit. Detailed discussion on how to determine if a biological treatment unit is thoroughly mixed can be found in reference 7. Systems that are not thoroughly mixed treatment units should be subdivided into a series of zones that have uniform characteristics within each zone. The number of zones required to characterize a biological treatment system will depend on the design and operation of the treatment system. Detailed discussion on how to determine the number of zones in a biological treatment unit and examples of determination of f_{bio}can be found in reference 8. Each zone should then be modeled as a separate unit. The amount of air emissions and biodegradation from the modeling of these separate zones can then be added to reflect the entire system.

II. Definitions

Biological treatment unit = wastewater treatment unit designed and operated to promote the growth of bacteria to destroy organic materials in wastewater.

f_{bio}= The fraction of individual applicable organic compounds in the wastewater biodegraded in a biological treatment unit.

F_{bio}= The fraction of total applicable organic compounds in the wastewater biodegraded in a biological treatment unit.

Fe = The fraction of applicable organic compounds emitted from the wastewater to the atmosphere.

K1 = First order biodegradation rate constant, L/g MLVSS-hr

KL = liquid-phase mass transfer coefficient, m/s

M = compound specific mass flow weighted average of organic compounds in the wastewater, Mg/Yr

III. Procedures for Determination of f_{bio}

The first step in the analysis to determine if a biological treatment unit may be used without being covered and vented through a closed-vent system to an air pollution control device is to determine the compound-specific f_{bio}. The following procedures may be used to determine f_{bio}:

(1) The EPA Test Method 304A or 304B (appendix A, part 63)—Method for the Determination of Biodegradation Rates of Organic Compounds,

(2) Performance data with and without biodegradation,

(3) Inlet and outlet concentration measurements,

(4) Batch tests,

(5) Multiple zone concentration measurements.

All procedures must be executed so that the resulting $f_{bio}$is based on the collection system and waste management units being in compliance with the rule. If the collection system and waste management units meet the suppression requirements at the time of the test, any of the procedures may be chosen. If the collection system and waste management units are not in compliance at the time of the performance test, then only Method 304A, B, or the batch test shall be chosen. If Method 304A, B, or the batch test is used, any anticipated changes to the influent of the full-scale biological treatment unit that will occur after the facility has enclosed the collection system must be represented in the influent feed to the benchtop bioreactor unit, or test unit.

Select one or more appropriate procedures from the five listed above based on the availability of site specific data and the type of mixing that occurs in the unit (thoroughly mixed or multiple mixing zone). If the facility does not have site-specific data on the removal efficiency of its biological treatment unit, then Procedure 1 or Procedure 4 may be used. Procedure 1 allows the use of a benchtop bioreactor to determine the first-order biodegradation rate constant. An owner or operator may elect to assume the first order biodegradation rate constant is zero for any regulated compound(s) present in the wastewater. Procedure 4 explains two types of batch tests which may be used to estimate the first order biodegradation rate constant. An owner or operator may elect to assume the first order biodegradation rate constant is zero for any regulated compound(s) present in the wastewater. Procedure 3 would be used if the facility has, or measures to determine, data on the inlet and outlet individual organic compound concentration for the biological treatment unit. Procedure 3 may only be used on a thoroughly mixed treatment unit. Procedure 5 is the concentration measurement test that can be used for units with multiple mixing zones. Procedure 2 is used if a facility has or obtains performance data on a biotreatment unit prior to and after addition of the microbial mass. An example where Procedure 2 could be used is an activated sludge unit where measurements have been taken on inlet and exit concentration of organic compounds in the wastewater prior to seeding with the microbial mass and startup of the unit. The flow chart in figure 1 outlines the steps to use for each of the procedures.

A. Method 304A or 304B (Procedure 1)

If the first procedure is selected, follow the instructions in appendix A of part 63 Method 304A “Method for the Determination of Biodegradation Rates of Organic Compounds (Vented Option)” or Method 304B “Method for the Determination of Biodegradation Rates of Organic Compounds (Scrubber Option).” Method 304A or 304B provides instruction on setting up and operating a self-contained benchtop bioreactor system which is operated under conditions representative of the target full-scale system. Method 304A uses a benchtop bioreactor system with a vent, and uses modeling to estimate any air emissions. Method 304B uses a benchtop bioreactor system which is equipped with a scrubber and is not vented. There are some restrictions on which method a source may use. If the facility is measuring the rate of biodegradation of compounds that may tend to react or hydrolyze in the scrubber of Method 304B, this method shall not be used and Method 304A is the required method. If a Henry's law value is not available to use with Form V, then Method 304A shall not be used and Method 304B is the required method. When using either method, the feed flow to the benchtop bioreactor shall be representative of the flow and concentration of the wastewater that will be treated by the full-scale biological treatment unit after the collection and treatment system has been enclosed as required under the applicable subpart.

The conditions under which the full-scale biological treatment unit is run establish the operating parameters of Method 304A or 304B. If the biological treatment unit is operated under abnormal operating conditions (conditions outside the range of critical parameters examined and confirmed in the laboratory), the EPA believes this will adversely affect the biodegradation rate and is an unacceptable treatment option. The facility would be making

multiple runs of the test method to simulate the operating range for its biological treatment unit. For wide ranges of variation in operating parameters, the facility shall demonstrate the biological treatment unit is achieving an acceptable level of control, as required by the regulation, across the ranges and not only at the endpoints.

If Method 304A is used, complete Form V initially. Form V is used to calculate K1 from the Method 304A results. Form V uses the Henry's law constant to estimate the fraction lost from the benchtop reactor vent. The owner or operator shall use the Henry's law values in Table I. Form V also gives direction for calculating an equivalent KL. Note on Form V if the calculated number for line 11 is greater than the calculated value for line 13, this procedure shall not be used to demonstrate the compound is biodegradable. If line 11 is greater than line 13, this is an indication the fraction emitted from the vent is greater than the fraction biodegraded. The equivalent KL determined on Form V is used in Form II (line 6). Estimation of the Fe and f_{bio}must be done following the steps in Form III. Form III uses the previously calculated values of K1 and KL (equivalent KL), and site-specific parameters of the full-scale bioreactor as input to the calculations. Forms II, III, and V must be completed for each organic compound in the wastewater to determine Fe and f_{bio}.

If Method 304B is used, perform the method and use the measurements to determine K1, which is the first-order biodegradation rate constant. Form I lists the sequence of steps in the procedure for calculating K1 from the Method 304B results. Once K1 is determined, KL must be calculated by use of mass transfer equations. Form II outlines the procedure to follow for use of mass transfer equations to determine KL. A computer program which incorporates these mass transfer equations may be used. Water7 is a program that incorporates these mass transfer equations and may be used to determine KL. Refer to Form II-A to determine KL, if Water7 or the most recent update to this model is used. In addition, the Bay Area Sewage Toxics Emission (BASTE) model version 3.0 or equivalent upgrade and the TOXCHEM (Environment Canada's Wastewater Technology Centre and Environmega, Ltd.) model version 1.10 or equivalent upgrade may also be used to determine KL for the biological treatment unit with several stipulations. The programs must be altered to output a KL value which is based on the site-specific parameters of the unit modeled, and the Henry's law values listed in Table I must be substituted for the existing Henry's law values in the programs. Input values used in the model and corresponding output values shall become documentation of the f_{bio}determination. The owner or operator should be aware these programs do not allow modeling of certain units. To model these units, the owner or operator shall use one of the other appropriate procedures as outlined in this appendix. The owner or operator shall not use a default value for KL. The KL value determined by use of these models shall be based on the site-specific parameters of the specific unit. This KL value shall be inserted in Form II (line 6). Estimation of the Fe and f_{bio}must be done following the steps in Form III. Form III uses the previously calculated values of K1 and KL, and site-specific parameters of the full-scale bioreactor as input to the calculations. Forms I, II, and III must be completed for each organic compound in the wastewater to determine Fe and f_{bio}.

B. Performance Data With and Without Biodegradation (Procedure 2)

Procedure 2 uses site-specific performance data that represents or characterizes operation of the unit both with and without biodegradation. As previously mentioned, proper determination of f_{bio}must be made on a system as it would exist under the rule. Using Form IV, calculate KL and K1. After KL and K1 are determined, Form III is used to calculate Fe and $f_{bio}$for each organic compound present in the wastewater.

C. Inlet and Outlet Concentration Measurements (Procedure 3)

Procedure 3 uses measured inlet and outlet organic compound concentrations for the unit. This procedure may only be used on a thoroughly mixed treatment unit. Again, proper determination of f_{bio}must be made on a system as it would exist under the rule. The first step

in using this procedure is to calculate KL using Form II. A computer model may be used. If the Water7 model or the most recent update to this model is used, then use Form II-A to calculate KL. After KL is determined using field data, complete Form VI to calculate K1. The TOXCHEM or BASTE model may also be used to calculate KL for the biological treatment unit, with the stipulations listed in procedure 304B. After KL and K1 are determined, Form III is used to calculate Fe and $f_{bio}$for each organic compound.

D. Batch Tests (Procedure 4)

Two types of batch tests which may be used to determine kinetic parameters are: (1) The aerated reactor test and (2) the sealed reactor test. The aerated reactor test is also known as the BOX test (batch test with oxygen addition). The sealed reactor test is also known as the serum bottle test. These batch tests should be conducted only by persons familiar with procedures for determining biodegradation kinetics. Detailed discussions of batch procedures for determining biodegradation kinetic parameters can be found in references 1–4.

For both batch test approaches, a biomass sample from the activated sludge unit of interest is collected, aerated, and stored for no more than 4 hours prior to testing. To collect sufficient data when biodegradation is rapid, it may be necessary to dilute the biomass sample. If the sample is to be diluted, the biomass sample shall be diluted using treated effluent from the activated sludge unit of interest to a concentration such that the biodegradation test will last long enough to make at least six concentration measurements. It is recommended that the tests not be terminated until the compound concentration falls below the limit of quantitation (LOQ). Measurements that are below the LOQ should not be used in the data analysis. Biomass concentrations shall be determined using standard methods for measurement of mixed liquor volatile suspended solids (MLVSS) (reference 5).

The change in concentration of a test compound may be monitored by either measuring the concentration in the liquid or in the reactor headspace. The analytical technique chosen for the test should be as sensitive as possible. For the batch test procedures described in this section, equilibrium conditions must exist between the liquid and gas phases of the experiments because the data analysis procedures are based on this premise. To use the headspace sampling approach, the reactor headspace must be in equilibrium with the liquid so that the headspace concentrations can be correlated with the liquid concentrations. Before the biodegradation testing is conducted, the equilibrium assumption must be verified. A discussion of the equilibrium assumption verification is given below in sections D.1 and D.2 since different approaches are required for the two types of batch tests.

To determine biodegradation kinetic parameters in a batch test, it is important to choose an appropriate initial substrate (compound(s) of interest) concentration for the test. The outcome of the batch experiment may be influenced by the initial substrate (S_O) to biomass (X_O) ratio (see references 3, 4, and 6). This ratio is typically measured in chemical oxygen demand (COD) units. When the S_O/X_Oratio is low, cell multiplication and growth in the batch test is negligible and the kinetics measured by the test are representative of the kinetics in the activated sludge unit of interest. The S_O/X_Oratio for a batch test is determined with the following equation:

$$\frac{S_0}{X_0} = \frac{S_i}{1.42\,X} \left(Eqn\ App.\ C-1 \right)$$

Where:

S_O/X_O=initial substrate to biomass ratio on a COD basis

S_i=initial substrate concentration in COD units (g COD/L)

X=biomass concentration in the batch test (g MLVSS/L)

1.42 = Conversion factor to convert to COD units

For the batch tests described in this section, the S_O/X_Oratio (on a COD basis) must be initially

less than 0.5.

1. *Aerated Reactor Test.* An aerated draft tube reactor may be used for the biokinetics testing (as an example see Figure 2 of appendix C). Other aerated reactor configurations may also be used. Air is bubbled through a porous frit at a rate sufficient to aerate and keep the reactor uniformly mixed. Aeration rates typically vary from 50 to 200 ml/min for a 1 liter system. A mass flow rate controller is used to carefully control the air flow rate because it is important to have an accurate measure of this rate. The dissolved oxygen (DO) concentration in the system must not fall below 2 mg/liter so that the biodegradation observed will not be DO-limited. Once the air flow rate is established, the test mixture (or compound) of interest is then injected into the reactor and the concentration of the compound(s) is monitored over time. Concentrations may be monitored in the liquid or in the headspace. A minimum of six samples shall be taken over the period of the test. However, it is necessary to collect samples until the compound concentration falls below the LOQ. If liquid samples are collected, they must be small enough such that the liquid volume in the batch reactor does not change by more than 10%.

Before conducting experiments with biomass, it is necessary to verify the equilibrium assumption. The equilibrium assumption can be verified by conducting a stripping experiment using the effluent (no biomass) from the activated sludge unit of interest. Effluent is filtered with a 0.45 um or smaller filter and placed in the draft tube reactor. Air is sparged into the system and the compound concentration in the liquid or headspace is monitored over time. This test with no biomass may provide an estimate of the Henry's law constant. If the system is at equilibrium, the Henry's law constant may be estimated with the following equation:

$$-\ln\left(C/C_0\right) = \left(GK_{eq}/V\right)t \qquad \left(Eqn\ App.\ C-2\right)$$

Where:

C=cencentration at time, t (min)

C_O=concentration at t=0

G=volumetric gas flow rate (ml/min)

V=liquid volume in the batch reactor (ml)

K_{eq}=Henry's law constant (mg/L-gas)/(mg/L-liquid)

t=time (min)

A plot of—ln(C/C_o) as a function of t will have a slope equal to GK_{eq}/V. The equilibrium assumption can be verified by comparing the experimentally determined $K_{eq}$for the system to literature values of the Henry's Law constant (including those listed in this appendix). If K_{eq}does not match the Henry's law constant, K_{eq}shall be determined from analysis of the headspace and liquid concentration in a batch system.

The concentration of a compound decreases in the bioreactor due to both biodegradation and stripping. Biodegradation processes are typically described with a Monod model. This model and a stripping expression are combined to give a mass balance for the aerated draft tube reactor):

$$-\frac{ds}{dt} = \left(\frac{GK_{eq}}{V}\right)s + \left(\frac{Q_m X}{K_s + s}\right)s \qquad \left(Eqn\ App.\ C-3\right)$$

Where:

s=test compound concentration, mg/liter

G=volumetric gas flow rate, liters/hr

K_{eq}=Henry's Law constant measured in the system, (mg/liter gas)/(mg/liter liquid)

V=volume of liquid in the reactor, liters

X=biomass concentration (g MLVSS/liter)

Q_m=maximum rate of substrate removal, mg/g MLVSS/hr
K_S=Monod biorate constant at half the maximum rate, mg/liter
Equation App. C–3 can be integrated to obtain the following equation:

$$-t = \frac{VK_s}{A}\ln\left(\frac{s}{s_0}\right) + \frac{Q_m XV^2}{AB}\ln\left(\frac{A+Bs}{A+Bs_0}\right) \qquad \text{(Eqn App. C-4)}$$

Where:
$A=GK_{eq}K_s+ Q_mVX$
$B=GK_{eq}$
S_o=test compound concentration at t=0
This equation is used along with the substrate concentration versus time data to determine the best fit parameters ($Q_m$and K_S) to describe the biodegradation process in the aerated reactor.
If the aerated reactor test is used, the following procedure is used to analyze the data.
Evaluate $K_{eq}$for the compound of interest with Form XI. The concentration in the vented headspace or liquid is measured as a function of time and the data is entered on Form XI. A plot is made from the data and attached to the Form XI. $K_{eq}$is calculated on Form XI and the results are contrasted with the expected value of Henry's law obtained from Form IX. If the comparison is satisfactory, the stripping constant is calculated from K_{eq}, completing Form XI. The values of K_{eq}may differ because the theoretical value of K_{eq}may not be applicable to the system of interest. If the comparison of the calculated $K_{eq}$from the form and the expected value of Henry's law is unsatisfactory, Form X can alternatively be used to validate K_{eq}. If the aerated reactor is demonstrated to not be at equilibrium, either modify the reactor design and/or operation, or use another type of batch test.
The compound-specific biorate constants are then measured using Form XII. The stripping constant that was determined from Form XI and a headspace correction factor of 1 are entered on Form XII. The aerated reactor biotest may then be run, measuring concentrations of each compound of interest as a function of time. If headspace concentrations are measured instead of liquid concentrations, then the corresponding liquid concentrations are calculated from the headspace measurements using the K_{eq}determined on Form XI and entered on Form XII.
The concentration data on Form XII may contain scatter that can adversely influence the data interpretation. It is possible to curve fit the concentration data and enter the concentrations on the fitted curve instead of the actual data. If curve fitting is used, the curve-fitting procedure must be based upon the Equation App. C–4. When curve fitting is used, it is necessary to attach a plot of the actual data and the fitted curve to Form XII.
If the stripping rate constant is relatively large when compared to the biorate at low concentrations, it may be difficult to obtain accurate evaluations of the first-order biorate constant. In these cases, either reducing the stripping rate constant by lowering the aeration rate, or increasing the biomass concentrations should be considered.
The final result of the batch testing is the measurement of a biorate that can be used to estimate the fraction biodegraded, f_{bio}. The number transferred to Form III is obtained from Form XII, line 9.
2. *Sealed Reactor Test.* This test uses a closed system to prevent losses of the test compound by volatilization. This test may be conducted using a serum bottle or a sealed draft tube reactor (for an example see Figure 3 of appendix C). Since no air is supplied, it is necessary to ensure that sufficient oxygen is present in the system. The DO concentration in the system must not fall below 2 mg/liter so that the biodegradation observed will not be DO-limited. As an alternative, oxygen may be supplied by electrolysis as needed to maintain the DO concentration above 2 mg/liter. The reactor contents must be uniformly mixed, by stirring or agitation using a shaker or similar apparatus. The test mixture (or compound) of interest is

injected into the reactor and the concentration is monitored over time. A minimum of six samples shall be taken over the period of the test. However, it is necessary to monitor the concentration until it falls below the LOQ.

The equilibrium assumption must be verified for the batch reactor system. In this case, K_{eq}may be determined by simultaneously measuring gas and liquid phase concentrations at different times within a given experiment. A constant ratio of gas/liquid concentrations indicates that equilibrium conditions are present and $K_{eq}$is not a function of concentration. This ratio is then taken as the $K_{eq}$for the specific compound in the test. It is not necessary to measure $K_{eq}$for each experiment. If the ratio is not constant, the equilibrium assumption is not valid and it is necessary to (1) increase mixing energy for the system and retest for the equilibrium assumption, or (2) use a different type of test (for example, a collapsible volume reactor).

The concentration of a compound decreases in the bioreactor due to biodegradation according to Equation App. C–5:

$$\frac{ds}{dt} = \left[\frac{-V_1}{V_g K_{eq} + V_1}\right]\left[\left(\frac{Q_m X}{K_s + s}\right) s\right] \qquad (Eqn\ App.\ C-5)$$

Where:

s=test compound concentration (mg/liters)

V_l=the average liquid volume in the reactor (liters)

V_g=the average gas volume in the reactor (liters)

Q_m=maximum rate of substrate removal (mg/g *ML* VSS/hr)

K_{eq}=Henry's Law constant determined for the test, (mg/liter gas)/(mg/liter liquid)

K_s=Monod biorate constant at one-half the maximum rate (mg/liter)

t=time (hours)

X=biomass concentration (g *ML* VSS/liter)

s_o=test compound concentration at time t=0

Equation App. C–5 can be solved analytically to give:

$$t = \frac{-(V_g K_{eq} + V_1)}{V_1 Q_m X}\left[(s - s_0) + K_s \ln\left(\frac{s}{s_0}\right)\right] \qquad \text{(Eqn App. C-6)}$$

This equation is used along with the substrate concentration versus time data to determine the best fit parameters ($Q_m$and K_s) to describe the biodegradation process in the sealed reactor.

If the sealed reactor test is used, Form X is used to determine the headspace correction factor. The disappearance of a compound in the sealed reactor test is slowed because a fraction of the compound is not available for biodegradation because it is present in the headspace. If the compound is almost entirely in the liquid phase, the headspace correction factor is approximately one. If the headspace correction factor is substantially less than one, improved mass transfer or reduced headspace may improve the accuracy of the sealed reactor test. A preliminary sealed reactor test must be conducted to test the equilibrium assumption. As the compound of interest is degraded, simultaneous headspace and liquid samples should be collected and Form X should be used to evaluate K_{eq}. The ratio of headspace to liquid concentrations must be constant in order to confirm that equilibrium conditions exist. If equilibrium conditions are not present, additional mixing or an alternate reactor configuration may be required.

The compound-specific biorate constants are then calculated using Form XII. For the sealed reactor test, a stripping rate constant of zero and the headspace correction factor that was determined from Form X are entered on Form XII. The sealed reactor test may then be run, measuring the concentrations of each compound of interest as a function of time. If headspace concentrations are measured instead of liquid concentrations, then the corresponding liquid

concentrations are calculated from the headspace measurements using $K_{eq}$from Form X and entered on Form XII.

The concentration data on Form XII may contain scatter that can adversely influence the data interpretation. It is possible to curve fit the concentration data and enter the concentrations on the fitted curve instead of the actual data. If curve fitting is used, the curve-fitting procedure must be based upon Equation App. C–6. When curve fitting is used, it is necessary to attach a plot of the actual data and the fitted curve to Form XII.

If a sealed collapsible reactor is used that has no headspace, the headspace correction factor will equal 1, but the stripping rate constant may not equal 0 due to diffusion losses through the reactor wall. The ratio of the rate of loss of compound to the concentration of the compound in the reactor (units of per hour) must be evaluated. This loss ratio has the same units as the stripping rate constant and may be entered as the stripping rate constant on line 1 of Form XII.

If the loss due to diffusion through the walls of the collapsible reactor is relatively large when compared to the biorate at low concentrations, it may be difficult to obtain accurate evaluations of the first-order biorate constant. In these cases, either replacing the materials used to construct the reactor with materials of low permeability or increasing the biomass concentration should be considered.

The final result of the batch testing is the measurement of a biorate that can be used to estimate the fraction biodegraded, f_{bio}. The number transferred to Form III is obtained from Form XII, line 9.

The number on Form XII line 9 will equal the Monod first-order biorate constant if the full-scale system is operated in the first-order range. If the full-scale system is operated at concentrations above that of the Monod first-order range, the value of the number on line 9 will be somewhat lower than the Monod first-order biorate constant. With supporting biorate data, the Monod model used in Form XII may be used to estimate the effective biorate constant K1 for use in Form III.

If a reactor with headspace is used, analysis of the data using equation App. C–6 is valid only if $V_l$and $V_g$do not change more than 10% (i.e., they can be approximated as constant for the duration of the test). Since biodegradation is occurring only in the liquid, as the liquid concentration decreases it is necessary for mass to transfer from the gas to the liquid phase. This may require vigorous mixing and/or reducing the volume in the headspace of the reactor.

If there is no headspace (e.g., a collapsible reactor), equation App. C–6 is independent of $V_1$and there are no restrictions on the liquid volume. If a membrane or bag is used as the collapsible-volume reactor, it may be important to monitor for diffusion losses in the system. To determine if there are losses, the bag should be used without biomass and spiked with the compound(s) of interest. The concentration of the compound(s) in the reactor should be monitored over time. The data are analyzed as described above for the sealed reactor test.

3. *Quality Control/Quality Assurance (QA/QC).* A QA/QC plan outlining the procedures used to determine the biodegradation rate constants shall be prepared and a copy maintained at the source. The plan should include, but may not be limited to:

1. A description of the apparatus used (e.g., size, volume, method of supplying air or oxygen, mixing, and sampling procedures) including a simplified schematic drawing.
2. A description of how biomass was sampled from the activated sludge unit.
3. A description of how biomass was held prior to testing (age, etc.).
4. A description of what conditions (DO, gas-liquid equilibrium, temperature, etc.) are important, what the target values are, how the factors were controlled, and how well they were controlled.
5. A description of how the experiment was conducted, including preparation of solutions, dilution procedures, sampling procedures, monitoring of conditions, etc.

6. A description of the analytical instrumentation used, how the instruments were calibrated, and a summary of the precision for that equipment.
7. A description of the analytical procedures used. If appropriate, reference to an ASTM, EPA or other procedure may be used. Otherwise, describe how the procedure is done, what is done to measure precision, accuracy, recovery, etc., as appropriate.
8. A description of how data are captured, recorded, and stored.
9. A description of the equations used and their solutions, including a reference to any software used for calculations and/or curve-fitting.

E. Multiple Zone Concentration Measurements (Procedure 5)

Procedure 5 is the concentration measurement method that can be used to determine the $f_{bio}$for units that are not thoroughly mixed and thus have multiple zones of mixing. As with the other procedures, proper determination of f_{bio}must be made on a system as it would exist under the rule. For purposes of this calculation, the biological unit must be divided[1] into zones with uniform characteristics within each zone. The number of zones that is used depends on the complexity of the unit. Reference 8, "Technical Support Document for the Evaluation of Aerobic Biological Treatment Units with Multiple Mixing Zones," is a source for further information concerning how to determine the number of zones that should be used for evaluating your unit. The following information on the biological unit must be available to use this procedure: basic unit variables such as inlet and recycle wastewater flow rates, type of agitation, and operating conditions; measured representative organic compound concentrations in each zone and the inlet and outlet; and estimated mass transfer coefficients for each zone.

[1] This is a mathematical division of the actual unit; not addition of physical barriers.

Reference 8 "Technical Support Document for the Evaluation of Aerobic Biological Treatment Units with Multiple Mixing Zones," is a source for further information concerning how to interpolate the biorates for multiple zones. In units with well-characterized concentration measurements obtained in an initial evaluation of the unit, it may be possible to demonstrate that there is a good correlation of the component concentrations with the locations in the multiple-zone unit. With this good correlation, it may be possible to accurately predict the concentrations in selected zones without actually testing each selected zone. This correlation method may be used for units that have many zones (greater than 5) or where one of the interior zones is not readily accessible for sampling. To use this correlation method of estimating zone concentrations, it is necessary to measure the concentrations in the inlet unit, the exit unit, and sufficient interior units to obtain a correlation of component concentrations with the locations. You cannot use this correlation method of estimating selected zone concentrations if monitoring of each zone is required, or if the accuracy and precision of the correlation is inferior to actual individual sampling error. The accuracy and precision of the correlation may be improved by increasing the number of locations tested. Because the correlation is based on many samples, it should provide an accurate representation of a stable operating system.

The estimated mass transfer coefficient for each compound in each zone is obtained from Form II using the characteristics of each zone. A computer model may be used. If the Water7 model or the most recent update to this model is used, then use Form II-A to calculate KL. The TOXCHEM or BASTE model may also be used to calculate KL for the biological treatment unit, with the stipulations listed in Procedure 304B. Compound concentration measurements for each zone are used in Form XIII to calculate the f_{bio}. A copy of Form XIII is completed for each of the compounds of concern treated in the biological unit.

IV. Calculation of Fbio

At this point, the individual f_{bios}determined by the previously explained procedures must be summed to obtain the total F_{bio}. To determine the F_{bio}multiply each compound specific $f_{bio}$by

the compound-specific average mass flow rate of the organic compound in the wastewater stream (see regulation for instruction on calculation of average mass flow rate). Sum these products and divide by the total wastewater stream average mass flow rate of organic compounds.

$$F_{bio} = \frac{\sum_{i=1}^{N}(f_{bio}i \times M_i)}{\sum_{i=1}^{n} M_i} \qquad (Eqn\ App.\ C-7)$$

M=compound specific average mass flow rate of the organic compounds in the wastewater (Mg/Yr)

n=number of organic compounds in the wastewater

The $F_{bio}$is then used in the applicable compliance equations in the regulation to determine if biodegradation may be used to comply with the treatment standard without covering and venting to an air pollution control device.

References

1. Rajagopalan, S. et al. “Comparison of Methods for Determining Biodegradation Kinetics of Volatile Organic Compounds.” Proceedings of Water Environment Federation. 67th Annual Conference, October 15–19, 1994.
2. Ellis, T.G. et al. “Determination of Toxic Organic Chemical Biodegradation Kinetics Using Novel Respirometric Technique”. Proceedings Water Environment Federation, 67th Annual Conference, October 15–19, 1994.
3. Pitter, P. and J. Chudoba. Biodegradability of Organic Substances in the Aquatic Environment. CRC Press, Boca Raton, FL. 1990.
4. Grady, C.P.L., B. Smets, and D. Barbeau. Variability in kinetic parameter estimates: A review of possible causes and a proposed terminology. Wat. Res. 30 (3), 742–748, 1996.
5. Eaton, A.D., et al. eds., Standard Methods for the Examination of Water and Wastewater, 19th Edition, American Public Health Association, Washington, DC, 1995.
6. Chudoba P., B. Capdeville, and J. Chudoba. Explanation of biological meaning of the So/Xo ratio in batch cultivation. Wat. Sci. Tech. 26 (3/4), 743–751, 1992.
7. Technical Support Document for Evaluation of Thoroughly Mixed Biological Treatment Units. November 1998.
8. Technical Support Document for the Evaluation of Aerobic Biological Treatment Units with Multiple Mixing Zones. July 1999.

Table I

Compound	**H_L@ 25 °C (atm/mole frac)**	**H_L@ 100 °C (atm/mole frac)**
1 Acetaldehyde	4.87e+00	5.64e+01
3 Acetonitrile	1.11e+00	1.78e+01
4 Acetophenone	5.09e−01	2.25e+01
5 Acrolein	4.57e+00	6.61e+01
8 Acrylonitrile	5.45e+00	6.67e+01
9 Allyl chloride	5.15e+02	2.26e+03
10 Aniline	9.78e−02	1.42e+00
12 Benzene	3.08e+02	1.93e+03

14 Benzyl chloride	1.77e+01	2.88e+02
15 Biphenyl	2.27e+01	1.27e+03
17 Bromoform	2.96e+01	3.98e+02
18 1,3-Butadiene	3.96e+03	1.56e+04
20 Carbon disulfide	1.06e+03	3.60e+03
21 Carbon tetrachloride	1.68e+03	1.69e+04
23 2-Chloroacetophenone	4.84e−02	1.43e+01
24 Chlorobenzene	2.09e+02	3.12e+03
25 Chloroform	2.21e+02	1.34e+03
26 Chloroprene	5.16e+01	1.74e+02
29 o-Cresol	9.12e−02	2.44e+01
31 Cumene	7.28e+02	7.15e+03
32 1,4-Dichlorobenzene(p)	1.76e+02	1.95e+03
33 Dichloroethyl ether	1.14e+00	3.57e+01
34 1,3-Dichloropropene	1.97e+02	1.44e+03
36 N,N-Dimethylaniline	7.70e−01	5.67e+02
37 Diethyl sulfate	3.41e−01	4.22e+01
38 3,3′-Dimethylbenzidine	7.51e−05	5.09e−01
40 1,1-Dimethylhydrazine	9.11e−02	1.57e+01
42 Dimethyl sulfate	2.23e−01	1.43e+01
43 2,4-Dinitrophenol	2.84e−01	1.50e+02
44 2,4-Dinitrotoluene	4.00e−01	9.62e+00
45 1,4-Dioxane	3.08e−01	9.53e+00
47 Epichlorohydrin	1.86e+00	4.34e+01
48 Ethyl acrylate	1.41e+01	3.01e+02
49 Ethylbenzene	4.38e+02	4.27e+03
50 Ethyl chloride (chloroethane)	6.72e+02	3.10e+03
51 Ethylene dibromide	3.61e+01	5.15e+02
52 Ethylene dichloride (1,2-Dichloroethane)	6.54e+01	5.06e+02
54 Ethylene oxide	1.32e+01	9.09e+01
55 Ethylidene dichloride (1,1-Dichloroethane)	3.12e+02	2.92e+03

57 Ethylene glycol dimethyl ether	1.95e+00	4.12e+01
60 Ethylene glycol monoethyl ether acetate	9.86e−02	6.03e+00
62 Ethylene glycol monomethyl ether acetate	1.22e−01	6.93e+00
64 Diethylene glycol dimethyl ether	8.38e−02	4.69e+00
69 Diethylene glycol diethyl ether	1.19e−01	7.71e+00
72 Ethylene glycol monobutyl ether acetate	2.75e−01	2.50e+01
73 Hexachlorobenzene	9.45e+01	2.57e+04
74 Hexachlorobutadiene	5.72e+02	6.92e+03
75 Hexachloroethane	4.64e+02	7.49e+04
76 Hexane	4.27e+04	9.44e+04
78 Isophorone	3.68e−01	1.68e+01
80 Methanol	2.89e−01	7.73e+00
81 Methyl bromide (Bromomethane)	3.81e+02	2.12e+03
82 Methyl chloride (Chloromethane)	4.90e+02	2.84e+03
83 Methyl chloroform (1,1,1-Trichloroethane)	9.67e+02	5.73e+03
84 Methyl ethyl ketone (2-Butanone)	7.22e+00	5.92e+01
86 Methyl isobutyl ketone (Hexone)	2.17e+01	3.72e+02
88 Methyl methacrylate	7.83e+00	9.15e+01
89 Methyl tert-butyl ether	3.08e+01	2.67e+02
90 Methylene chloride (Dichloromethane)	1.64e+02	9.15e+02
93 Naphthalene	2.68e+01	7.10e+02
94 Nitrobenzene	1.33e+00	2.80e+01
96 2-Nitropropane	6.61e+00	8.76e+01
99 Phosgene	7.80e+02	3.51e+03
102 Propionaldehyde	3.32e+00	1.42e+02
103 Propylene dichloride	1.59e+02	1.27e+03
104 Propylene oxide	1.98e+01	1.84e+02
106 Styrene	1.45e+02	1.72e+03
107 1,1,2,2-Tetrachloroethane	1.39e+01	1.99e+02

108 Tetrachloroethylene (Perchloroethylene)	9.83e+02	1.84e+04
109 Toluene	3.57e+02	2.10e+03
112 o-Toluidine	1.34e−01	1.15e+01
113 1,2,4-Trichlorobenzene	1.07e+02	1.04e+03
114 1,1,2-Trichloroethane	4.58e+01	5.86e+02
115 Trichloroethylene	5.67e+02	7.66e+03
116 2,4,5-Trichlorophenol	4.84e−01	6.27e+01
117 Triethylamine	6.94e+00	2.57e+02
118 2,2,4-Trimethylpentane	1.85e+05	9.74e+05
119 Vinyl acetate	2.82e+01	2.80e+02
120 Vinyl chloride	1.47e+03	6.45e+03
121 Vinylidene chloride (1,1-Dichloroethylene)	1.44e+03	1.40e+04
123 m-Xylene	4.13e+02	3.25e+03
124 o-Xylene	2.71e+02	2.55e+03
125 p-Xylene	4.13e+02	3.20e+03

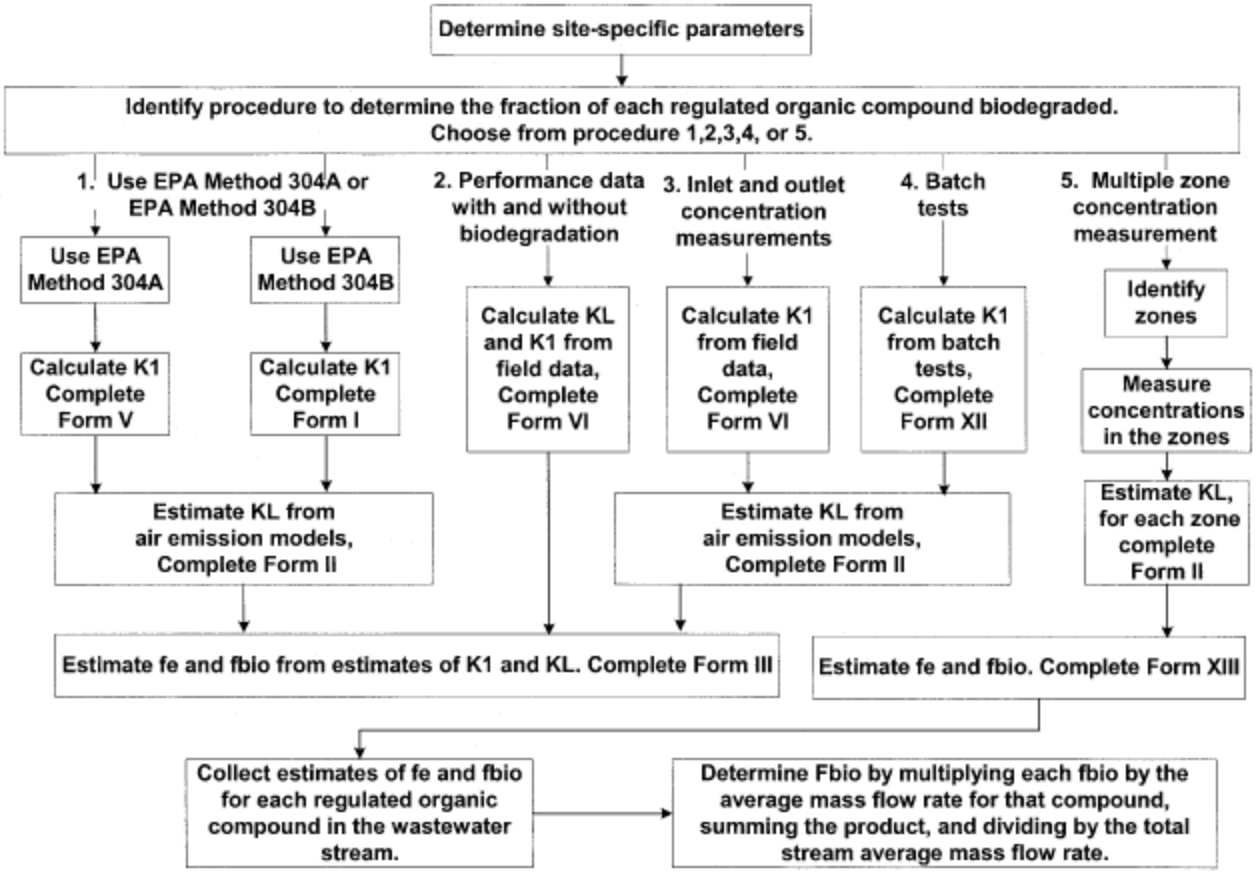

Figure 1. ALTERNATIVE EXPERIMENTAL METHODS FOR DETERMINING THE FRACTION OF ORGANIC COMPOUND BIODEGRADED (Fbio) IN A BIOLOGICAL TREATMENT UNIT

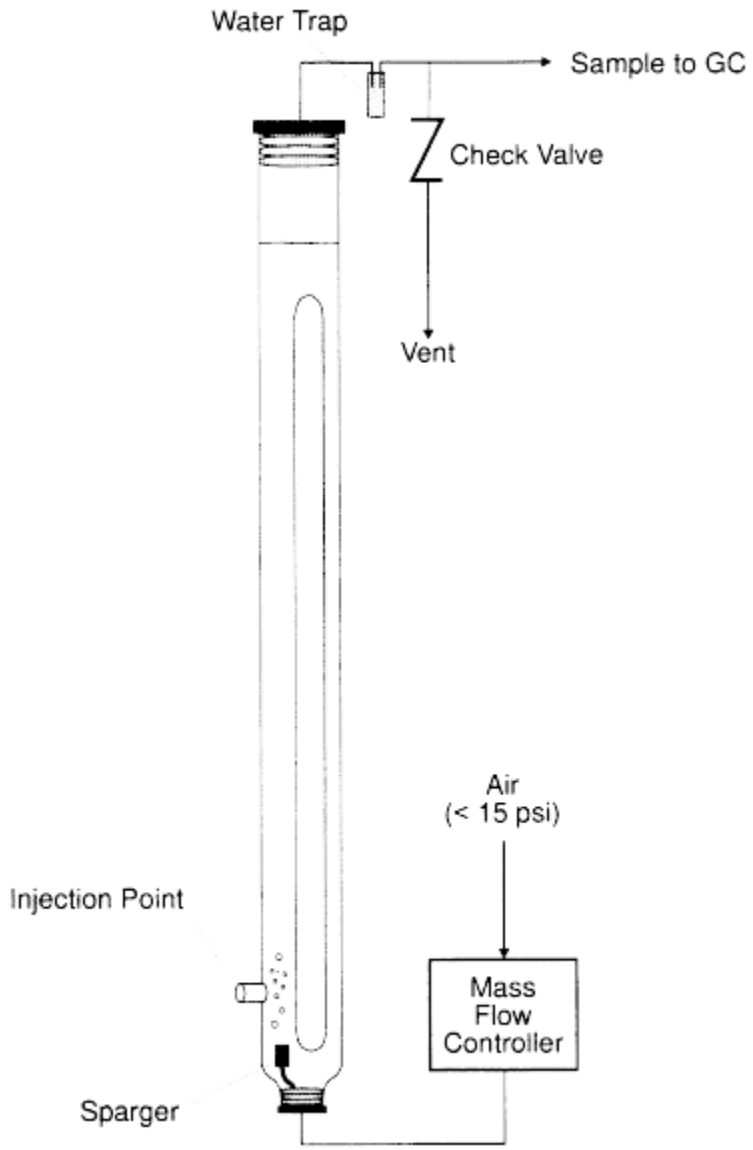

Figure 2. Example Aerated Draft Tube Reactor

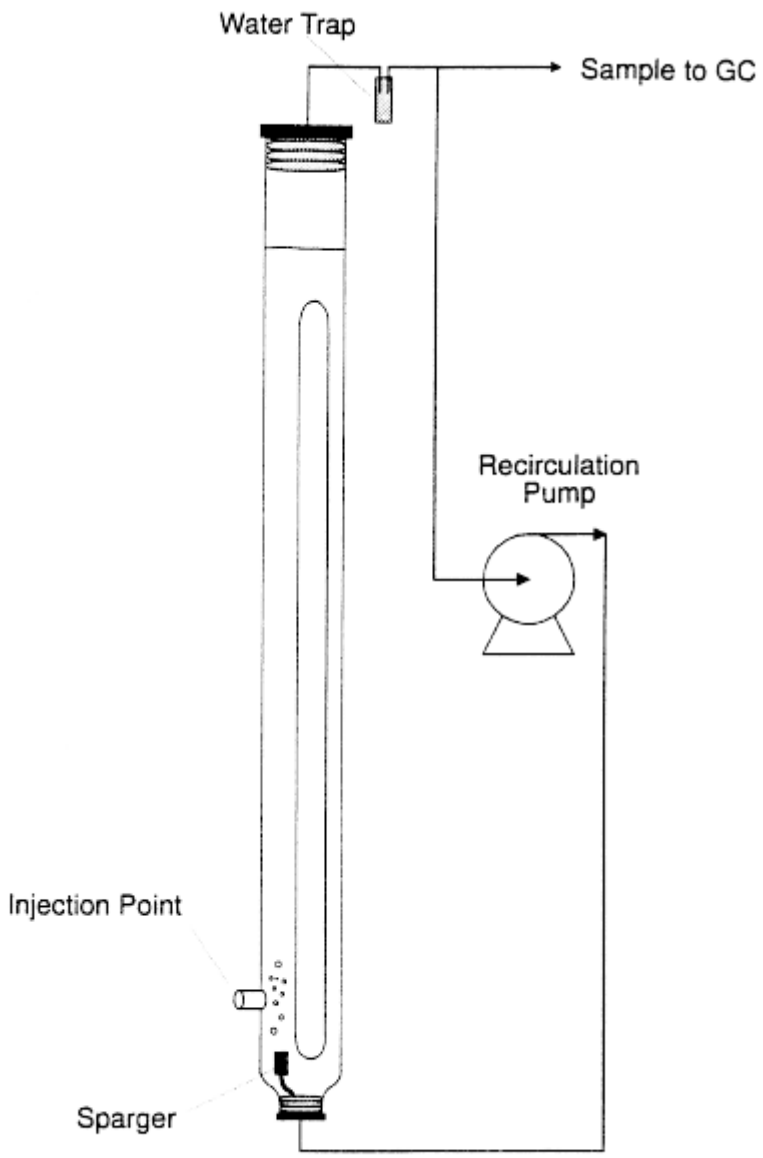

Figure 3. Example Sealed Draft Tube Reactor

Form I

DATA FORM FOR THE
ESTIMATION OF THE EPA METHOD 304B FIRST ORDER BIORATE CONSTANT

NAME OF THE FACILITY for site specific biorate determination			Example
COMPOUND for site specific biorate determination			*METHANOL*
INLET CONCENTRATION used in EPA METHOD 304B	1		78
EXIT CONCENTRATION measured by EPA METHOD 304B	2		6
BIOMASS (g/L) This is the dried solids that are obtained from the mixed liquor suspended solids in the bench scale bioreactor.	3		0.075
TEMPERATURE OF BIOREACTOR (deg. C)	4		35
VOLUME of EPA METHOD 304B bench scale bioreactor (L)	5		6
FLOW RATE of waste treated in the bench scale bioreactor (L/hr)	6		0.146
CALCULATIONS FROM EPA METHOD 304B DATA MEASUREMENTS			
RESIDENCE TIME (hr) Divide the number on line 5 by the number on line 6 and enter the results here.	7		41.10
Concentration Decrease (g/m^3). Subtract the number on line 2 from the number on line 1 and enter the results here.	8		72.00
BIORATE (g/m^3-hr). Divide the number on line 8 by the number on line 7 and enter the results here.	9		1.75
Product of concentration and biomass. Multiply the number on line 2 by the number on line 3 and enter the results here.	10		0.45
BIORATE K1 (L/g bio-hr) Divide the number on line 9 by the number on line 10 and enter the results here.	11		3.89
Temperature adjustment. Subtract 25 deg. C from the number on line 4 and enter the results here.	12		10
Temperature adjustment factor. 1.046 is the default temperature adjustment factor. Enter the temperature adjustment factor here.	13		1.046
Biorate temperature ratio. Raise the number on line 13 to the power of the number on line 12.	14		1.567
BIORATE K1 at 25 deg. C (L/g MLVSS-hr) Divide the number on line 11 by the number on line 14 and enter the results here.	15		2.48

Note: With Monod kinetics, use Kmax=1000 to convert the Monod kinetics to first order. If a different temperature adjustment factor than the default is entered on line 13, make sure that the adjustment factor used in the calculations agrees with the value entered on line 13.

Form II	PROCEDURES FORM FOR THE ESTIMATION OF THE KL FROM UNIT SPECIFICATIONS		
NAME OF THE FACILITY for site specific biorate determination			
NAME OF UNIT for site specific biorate determination			
NAME OF COMPOUND			
HENRY'S LAW constant for the compound (mole fraction in gas per mole fraction in water at 25 degrees Celsius)			
IDENTIFY THE TYPE OF UNIT			(check one box below)
	Quiescent impoundment	1	
	Surface agitated impoundment	2	
	Surface agitated impoundment with submerged air	3	
	Unit agitated by submerged aeration gas	4	
	EPA Method 304A, Covered unit, UNOX system, or bench scale reactor	5	

PROCEDURES BASED UPON THE TYPE OF UNIT

UNIT	PROCEDURE TO FOLLOW
1	Use the quiescent impoundment model to determine KL. Use Kq as KL as determined from Form VII.
2	Use the quiescent impoundment model to determine KL for the quiescent zone, Form VII. Use the aerated impoundment model to determine KL for the agitated surface, Form VIII.
3	Use the quiescent impoundment model to determine Kq for the quiescent zone, Form VII. Use the aerated impoundment model to determine KL for the agitated surface, Form VIII. The total system KL is the sum of the KL from Form VIII and the equivalent KL from Form V. Use the submerged air rate as the vent rate in form V.
4	Use the aerated impoundment model to determine KL if the surface is agitated. Use the quiescent impoundment model if the surface is not agitated. KL includes the effect of volatilization in the air discharge. See section 5.6.1 in AIR EMISSIONS MODELS FOR WASTE AND WASTEWATER (EPA-453/R-94-080A). The total system KL is the sum of the KL from Form VIII and the equivalent KL from Form V. Use the submerged air rate as the vent rate in Form V.
5	KL for the surface is assumed to be equal zero. Determine equivalent KL based upon air discharge. Use Form V for EPA Method 304A or if the concentration in the vent is not measured. Use Form V-A if the concentration in the vent is measured.

Estimate of KL obtained from above procedures (m/s)	6	

Form II-A	PROCEDURES FORM FOR THE ESTIMATION OF THE KL FROM WATER 7		
NAME OF THE FACILITY for site specific biorate determination			
NAME OF UNIT for site specific biorate determination			
NAME OF COMPOUND			
HENRY'S LAW COMPOUND			
IDENTIFY THE TYPE OF UNIT			(check one box below)
	Quiescent impoundment	1	
	Surface agitated impoundment	2	
	Surface agitated impoundment with submerged air	3	
	Unit agitated by submerged aeration gas	4	
	Covered unit, UNOX system, bench scale reactor	5	

PROCEDURES BASED UPON THE TYPE OF UNIT

unit	procedure to follow
1	Use the quiescent impoundment model to determine KL.
2	Use the aerated impoundment model to determine KL for the combined agitated surfaces and quiescent surfaces.
3	Use the aerated impoundment model to determine KL for the combined agitated surfaces and quiescent surfaces.
4	Use the aerated impoundment model to determine KL if the surface is agitated. Use the quiescent impoundment model if the surface is not agitated. KL includes the effect of volatilization in the air discharge. See section 5.6.1 in AIR EMISSIONS MODELS FOR WASTE AND WASTEWATER (EPA-453/R-94-080A).
5	KL for the surface is assumed to equal zero. Select the covered unit option with the aerated impoundment model.

Form III	DATA FORM FOR THE ESTIMATION OF THE COMPOUND FRACTION BIODEGRADED AND AIR EMISSIONS		
NAME OF THE FACILITY for site specific biorate determination			example
COMPOUND for site specific biorate determination			*methanol*
ESTIMATE OF K1 from Form I line 11, Form V line 15, Form V-A line 15, Form IV line 14, Form VI line 13, or Form XII line 9 (L/g MLVSS-hr)	1		3.89
BIOMASS (g/L) This is the dried solids that are obtained from the mixed liquor suspended solids in the full-scale bioreactor.	2		2.4
VOLUME of full-scale system (cubic meters)	3		2700
AREA of the liquid surface of the full-scale system (square meters)	4		1500
ESTIMATE OF KL from Form II, II-A, IV, V, V-A, or V-B (m/s)	5		0.0000036
FLOW RATE of waste treated in full-scale bioreactor (m^3/s)	6		0.1565
CALCULATIONS FROM ESTIMATES OF K1 AND KL			
BIORATE (m^3/s) Multiply the numbers on lines 1, 2, and 3 together and divide the results by 3600. Enter the results here.	7		7.0020000
AIR STRIPPING (m^3/s). Multiply the numbers on lines 4 and 5 together. Enter the results here.	8		0.0054000
EFFLUENT DISCHARGE (m^3/s). Enter the number on line 6 here.	9		0.1565000
TOTAL of the three loss mechanisms. Add the numbers on lines 7, 8, and 9. Enter the results here.	10		7.1639000
Fraction biodegraded: Divide the number on line 7 by the number on line 10 and enter the results here.	11		0.9774006
Fraction air emissions: Divide the number on line 8 by the number on line 10 and enter the results here.	12		0.0007538
Fraction remaining in unit effluent: Divide the number on line 9 by the number on line 10 and enter the results here.	13		0.0218456
Total: add the numbers on lines 11, 12, and 13. The sum should equal 1.0	14		1.0000000

Form IV	DATA FORM FOR THE ESTIMATION OF K1 AND KL FROM FULL SCALE UNIT DATA WITH AND WITHOUT BIODEGRADATION		
For a general discussion of this approach, see Air Emissions Models for Waste and Wastewater, EPA-453/R-94-080A, Chapter 5, November 1994.			
NAME OF THE FACILITY for site specific biorate determination			example
COMPOUND for site specific biorate determination			*methanol*
BIOMASS (g/L) This is the dried solids that are obtained from the mixed liquor suspended solids in the full-scale bioreactor	1		2.4
VOLUME of full-scale system (cubic meters)	2		2700
AREA of the liquid surface of the full-scale system (square meters)	3		1500
INLET CONCENTRATION of compound (g/m^3 or ppmw)	4		133.5
EXIT CONCENTRATION of compound (g/m^3 or ppmw)	5		10.57
EXIT CONCENTRATION (NO BIODEGRADATION) of compound (g/m^3 or ppmw)	6		133
FLOW RATE of waste treated in the full-scale bioreactor (m^3/s)	7		0.1565
ESTIMATES OF K1 AND KL FROM FIELD DATA WITH AND WITHOUT BIODEGRADATION			
REMOVAL WITH BIODEGRADATION (g/s) Subtract the number on line 5 from the number on line 4 and multiply the results by the number on line 7. Enter the results here.	8		19.238545
REMOVAL WITHOUT BIODEGRADATION (g/s) Subtract the number on line 6 from the number on line 4 and multiply the results by the number on line 7. Enter the results here.	9		0.078250
KL A ESTIMATE (m^3/s) Divide the number on line 9 by the number on line 6. Enter the results here.	10		0.000588
K1 B V + KL A ESTIMATE (m^3/s) . Divide the number on line 8 by the number on line 5. Enter the results here.	11		1.820108
K1 B V ESTIMATE (m^3/s) Subtract the number on line 10 from the number on line 11. Enter the results here.	12		1.819520
Product of B and V. Multiply the number on line 1 by the number on line 2 and enter the results here.	13		6480
K1 ESTIMATE (L/gMLVSS-hr) Divide the number on line 12 by the number on line 13 and multiply by 3600 s/hr. Enter the results here.	14		1.010844
KL ESTIMATE (m/s) Divide the number on line 10 by the number on line 3. Enter the results here.	15		0.0000004

Form V	DATA FORM FOR THE ESTIMATION OF K1 FOR EPA METHOD 304A OR FROM A COVERED, VENTED BIODEGRADATION UNIT.		
For a general discussion of this approach, see Air Emissions Models for Waste and Wastewater, EPA-453/R-94-080A, Chapter 5, November 1994			
NAME OF THE FACILITY for site specific biorate determination			example
COMPOUND for site specific biorate determination			*methanol*
BIOMASS (g/L) This is the dried solids that are obtained from the mixed liquor suspended solids in the unit.	1		0.075
VENT RATE of total gas leaving the unit (G, m^3/s)	2		1
TEMPERATURE of the liquid in the unit (deg. C)	3		25
INLET CONCENTRATION of compound (g/m^3 or ppmw)	4		100
EXIT CONCENTRATION of compound (g/m^3 or ppmw)	5		5
ESTIMATE OF Henry's law constant (H, g/m^3 in gas / g/m^3 in liquid). Obtained from Form IX	6		0.00021
AREA OF REACTOR (m^2)	7		3400
VOLUME OF REACTOR (m^3)	8		10000
FLOW RATE of waste treated in the unit (m^3/s)	9		0.146
CALCULATION OF THE ESTIMATE OF K1			
TOTAL REMOVAL (g/s) Subtract the number on line 5 from the number on line 4 and multiply the result by the number on line 9. Enter the results here.	10		13.870000
[H G] ESTIMATE (m^3/s) Multiply the number on line 2 by the number on line 6. Enter the results here.	11		0.000021
[K1 B V + H G] (m^3/s) Divide the number on line 10 by the number on line 5. Enter the results here.	12		2.774000
[K1 B V] ESTIMATE (m^3/s) Subtract the number on line 11 from the number on line 12. Enter the results here.	13		2.773979
If the number on line 11 is greater than the number on line 13, this procedure cannot be used to demonstrate that the compound is biodegradable. Do not complete lines 14 and 15.			
Product of B and V. Multiply the number on line 1 by the number on line 8 and enter the results here.	14		750.000000
K1 ESTIMATE (L/g MLVSS-hr) Divide the number on line 13 by the number on line 14 and multiply by 3600 s/hr. Enter the results here.	15		13.315099
EQUIVALENT KL. Divide the number on line 11 by the number on line 7. Enter the results on line 16.	16		6.18e-09

This form may be used to estimate the Equivalent KL with input data for lines 2, 6, and 7.

Form V-A DATA FORM FOR THE CALCULATION OF K1 FROM A COVERED, VENTED BIODEGRADATIN UNIT THE VENT CONCENTRATION IS MEASURED			
For a general discussion of this approach, see Air Emissions Models for Waste and Wastewater, EPA-453/R-94-080A, Chapter 5, November 1994.			
NAME OF THE FACILITY for site specific biorate determination			example
COMPOUND for site specific biorate determination			*methanol*
BIOMASS (g/L) This is the dried solids that are obtained from the mixed liquor suspended solids in the unit.	1		0.075
VENT RATE of total gas leaving the unit (G, m^3/s)	2		.1
TEMPERATURE of the liquid in the unit (deg. C)	3		25
INLET CONCENTRATION of compound (Ci, g/m^3 or ppmw)	4		100
EXIT CONCENTRATION of compound (Ce, g/m^3 or ppmw)	5		5
VENT CONCENTRATION of compound (Cv, g/m^3)	6		0.001
AREA OF REACTOR SURFACE (m^2)	7		3400
VOLUME OF REACTOR (m^3)	8		10000
FLOW RATE of waste treated in the unit (m^3/s)	9		0.146
CALCULATION OF THE ESTIMATE OF K1			
TOTAL REMOVAL (g/s) Subtract the number on line 5 from the number on line 4 and multiply the results by the number on line 9. Enter the results here.	10		13.87
[G Cv/Ce] ESTIMATE (m^3/s) Multiply the number on line 2 by the number on line 6 and divide by the number on line 5. Enter the results here.	11		0.000020
[K1 B V + G Cv/Ce] (m^3/s) Divide the number on line 10 by the number on line 5. Enter the results here.	12		2.77
[K1 B V] ESTIMATE (m^3/s) Subtract the number on line 11 from the number on line 12. Enter the results here.	13		2.77
If the number on line 11 is greater than the number on line 13, this procedure cannot be used to demonstrate that the compound is biodegradable. Do not complete lines 14 and 15.			
Product of B and V. Multiply the number on line 1 by the number on line 8 and enter the results here.	14		750.00
K1 ESTIMATE (L/g MLVSS-hr) Divide the number on line 13 by the number on line 14 and multiply by 3600 s/hr. Enter the results here.	15		13.30
EQUIVALENT KL. Divide the number on line 11 by the number on line 7. Enter the results here.	16		5.9e-09

This form may be used to calculate the Equivalent KL with input data for lines 2, 5, 6, and 7.

Form V-B DATA FORM FOR THE CALCULATION OF EQUIVALENT KL FROM A VENTED BIODEGRADATIN UNIT WITH AN AIR SUPPORTED COVER. THE VENT CONCENTRATION IS MEASURED.			
NAME OF THE FACILITY for site specific biorate determination			example
COMPOUND for site specific biorate determination			*methanol*
Vent rate of total gas entering the cover (m^3/s)	1		120
Vent rate of total gas leaving the cover transferred to a control device (m^3/s)	2		100
TEMPERATURE of the liquid in the unit (deg. C)	3		25
Area of air supported cover (m^2)	4		1950
Permeability through the cover (cm/s)	5		5E-6
VENT CONCENTRATION of compound (g/m^3)	6		0.0022
EXIT CONCENTRATION of compound (g/m^3 or ppmw)	7		10.57
AREA OF REACTOR SURFACE (m^2)	8		1500
Performance of vent control device (% control)	9		95
CALCULATION OF THE ESTIMATE OF EQUIVALENT KL			
Loss of forced air in the cover due to leakage. (m^3/s) Subtract the number on line 2 from the number on line 1. Enter the results here.	10		20
Loss of compound in forced air (g/s) Multiply the number on line 10 by the number on line 6. Enter the results here.	11		0.044
Loss of compound by permeation through cover (g/s). Line 4 times line 5, line 6, and divide by 100. Enter the results here.	12		0
Loss of compound by permeation through vent (g/s). Line 2 times line 6. Enter the results here.	13		0.22
Treatment of compound in control device (g/s). Line 13 times line 9, divided by 100. Enter the results here.	14		0.209
Total removal from air phase (g/s). Sum of 11, 12, and 13.	15		0.264
Total treatment effectiveness (%) Line 14 divided by 15 times 100.	16		79.1666
[G Cv/Ce] ESTIMATE (m^3/s) Divide line 15 by line 7.	17		0.025
EQUIVALENT KL. Divide the number on line 17 by line 8.	18		1.67e-05

The permeability is the ratio of the flux (g/cm^2) to the gas concentration (g/cm^3).
If the gas is generated by the unit, the gas entering the cover may be estimated from an estimate of the cover leak rate and the total gas transferred to the control device.

Form VI	DATA FORM FOR THE ESTIMATION OF K1 FROM FULL SCALE UNIT DATA WITH BIODEGRADATION		
NAME OF THE FACILITY for site specific biorate determination			example
COMPOUND for site specific biorate determination			*methanol*
BIOMASS (g/L) This is the dried solids that are obtained from the mixed liquor suspended solids in the full-scale bioreactor.	1		0.075
VOLUME of full-scale system (cubic meters)	2		100000
AREA of the liquid surface of the full-scale system (square meters)	3		10000
INLET CONCENTRATION of compound (g/m^3 or ppmw)	4		100
EXIT CONCENTRATION of compound (g/m^3 or ppmw)	5		5
ESTIMATE OF KL from Form II (m/s)	6		0.00001
FLOW RATE of waste treated in the full-scale bioreactor (m^3/s)	7		0.146
CALCULATION OF THE ESTIMATE OF K1 FROM FIELD DATA			
REMOVAL WITH BIODEGRADATION (g/s) Subtract the number on line 5 from the number on line 4 and multiply the results by the number on line 7. Enter the results here.	8		13.87
[KL A] ESTIMATE (m^3/s) Multiply the number on line 3 by the number on line 6. Enter the results here.	9		0.10
[K1 B V + KL A] (m^3/s) Divide the number on line 8 by the number on line 5. Enter the results here.	10		2.774
[K1 B V] ESTIMATE (m^3/s) Subtract the number on line 9 from the number on line 10. Enter the results here.	11		2.674
Product of B and V. Multiply the number on line 1 by the number on line 2 and enter the results here.	12		7500
K1 ESTIMATE (L/g MLVSS-hr) Divide the number on line 11 by the number on line 12 and multiply by 3600 s/hr. Enter the results here.	13		1.28352

FORM VII

DATA FORM FOR CALCULATING THE
MASS TRANSFER COEFFICIENT FOR A QUIESCENT SURFACE IMPOUNDMENT

Facility Name: _____

Waste Stream Compound: _____

Enter the following:

F - Impoundment fetch (m) _____
D - Impoundment depth (m) _____
U_{10} - Windspeed 10 m above liquid surface (m/s) _____
D_w - Diffusivity of compound in water (cm^2/s) _____
D_{ether} - Diffusivity of ether in water (cm^2/s) _____
μ_G - Viscosity of air, (g/cm-s) _____
ρ_G - Density of air, (g/cm^3) _____
D_a - Diffusivity of compound in air, (cm^2/s) _____
A - Area of impoundment, (m^2) _____
H - Henry's law constant, (atm-m^3/g mol) _____
R - Universal gas constant, (atm-m^3/g mol-°K) _____
μ_L - Viscosity of water, (g/cm-s) _____
ρ_L - Density of liquid, (g/cm^3) _____
T - Impoundment temperature, (°C) _____

Calculate the following:

Calculate F/D: _____

A. Calculate the liquid phase mass transfer coefficient, k_L, using one of the following procedures, (m/s)

1. Where F/D < 14 and U_{10} > 3.25 m/s, use the following procedure from MacKay and Yeun:

   Calculate the Schmidt number on the liquid side, Sc_L, as follows:
   $Sc_L = \mu_L/\rho_L D_w$ _____

   Calculate the friction velocity, U^*, as follows, (m/s):
   $U^* = 0.01 \times U_{10}(6.1 + 0.63\, U_{10})^{0.5}$ _____

   Where U^* is > 0.3, calculate k_L as follows:
   $k_L = (1.0 \times 10^{-6}) + (34.1 \times 10^{-4})U^* \times Sc_L^{-0.5}$ _____

   Where U^* is < 0.3, calculate k_L as follows:
   $k_L = (1.0 \times 10^{-6}) + (144 \times 10^{-4})(U^*)^{2.2} \times Sc_L^{-0.5}$ _____

2. For all other values of F/D and U_{10}, calculate k_L using the following procedure from Springer:[1]

---

[1]Springer, C., P. D. Lunney, and K. T. Valsaraj. Emission of Hazardous Chemicals from Surface and Near Surface Impoundments to Air. U.S. Environmental Protection Agency, Solid and Hazardous Waste Research Division. Cincinnati, OH. Project Number 808161-02. December 1984.

Where U_{10} is < 3.25 m/s, calculate k_L as follows:
$k_L = 2.78 \times 10^{-6}(D_w/D_{ether})^{2/3}$ _____

Where U_{10} is > 3.25 and 14 < F/D < 51.2, Calculate k_L as follows:
$k_L = [2.605 \times 10^{-6}(F/D) + 1.277 \times 10^{-7}]\, U_{10}^{2}\, (D_w/D_{ether})^{2/3}$ _____

Where U_{10} > 3.25 m/s and F/D > 51.2, calculate k_L as follows:
$k_L = (2.611 \times 10^{-7})U_{10}^{2}\, (D_w/D_{ether})^{2/3}$ _____

B Calculate the gas phase mass transfer coefficient, k_G, using the following procedure from MacKay and Matsasugu, (m/s):[2]

Calculate the Schmidt number on the gas side, Sc_G, as follows: $Sc_G = \mu_G/\rho_G D_a$ _____

Calculate the effective diameter of the impoundment, d_e, as follows, (m):
$d_e = (4A/\pi)^{0.5}$ _____

Calculate k_G as follows, (m/s): $k_G = 4.82 \times 10^{-3}\, U_{10}^{0.78}\, Sc_G^{-0.67}\, d_e^{-0.11}$ _____

C. Calculate the partition coefficient, Keq, as follows: Keq = H/[R(T+273)]

_____

D. Calculate the overall mass transfer coefficient, K_q, as follows, (m/s):
$1/K_q = 1/k_G + 1/Keq\text{-}k_G$ _____

Where the total impoundment surface is quiescent:
$KL = K_q$

Where a portion of the impoundment surface is turbulent, continue with Form VIII.

---

[2] Hwang, S. T. Toxic Emissions from Land Disposal Facilities. Environmental Progress. 1 46-52. February 1982.

FORM VIII

DATA FORM FOR CALCULATING THE
MASS TRANSFER COEFFICIENT FOR AN AERATED SURFACE IMPOUNDMENT

Facility Name: _____

Waste Stream Compound: _____

Enter the following:

J - Oxygen transfer rating of surface aerator, (lb O_2/hr-hp) _____
POWR - Total power to aerators, (hp) _____
T - Water temperature, (°C) _____
O_t - Oxygen transfer correction factor _____
MW_L - Molecular weight of liquid _____
A_t - Turbulent surface area of impoundment, (ft^2) _____
(If unknown, use values from Table 1)
A - Total surface area of impoundment, (ft^2) _____
ρ_L - Density of liquid, (lb/ft^3) _____
D_w - Diffusivity of constituent in water, (cm^2/s) _____
$D_{O_2,w}$ - Diffusivity of oxygen in water, (cm^2/s) _____

d - Impeller diameter, (cm) _____
w - Rotational speed of impeller, (rad/s) _____
ρ_a - Density of air, (gm/cm^3) _____
N - Number of aerators _____
g_c - Gravitation constant, (lb_m-$ft/s^2/lb_f$) _____
d' - Impeller diameter, (ft) _____
D_a - Diffusivity of constituent in air, (cm^2/s) _____
MW_a - Molecular weight of air _____
R - Universal gas constant, (atm-m^3/g mol °C) _____
H = Henry's law constant, (atm-m^3/g mol) _____

Calculate the following:

A. Calculate the liquid phase mass transfer coefficient, k_L, using the following Equation from Thibodeaux:[3,4]

$$k_L = [8.22 \times 10^{-9}\, J\, (POWR)(1.024)^{T-20}\, O_t\, 10^6\, MW_L/(Va_t\rho_L)]\, (D_w/D_{O_2,w})^{0.5}, \text{ (m/s)}$$

_____

[3]GCA Corporation. Emissions Data and Model Review for Wastewater Treatment Operations. Draft Technical Note. Prepared for U.S. Environmental Protection Agency. Contract No. 68-01-6871, Assignment 49. August 1985. p. 4-2.

[4]Hwang, S. T. Toxic Emissions from Land Disposal Facilities. Environmental Progress. 1:46-52. February 1982.

B. Calculate the gas phase mass transfer coefficient, k_G, using the following procedure from Reinhardt.[5,6]

Calculate the viscosity of air, μ_a, as follows, (g/cm.s):
$\mu_a = 4.568 \times 10^{-7}\ T + 1.7209 \times 10^{-4}$ _____

Calculate the Reynold's number as follows:
$R_e = d^2 w \rho_a / \mu_a$ _____

Calculate power to impeller, P_I, as follows, (ft.lb$_f$/s):
$P_I = 0.85\ (POWR)\ 550/N$ _____

Calculate the power number, p, as follows:
$p = P_I\ g_c / (\rho_L d^{*5}\ w^3)$ _____

Calculate the Schmidt number, Sc_G, as follows:
$Sc_G = \mu_a / \rho_a D_a$ _____

Calculate the Fronde number, F_r, as follows:
$F_r = d\ w^2 / g_c$ _____

Calculate k_G as follows:
$k_G = 1.35 \times 10^{-7}\ R_e^{1.42}\ p^{0.4}\ Sc_G^{-0.5}\ F_r^{0.21}\ D_a MW_a / d$, (m/s) _____

C. Calculate the partition coefficient, Keq, as follows:
$Keq = H/[R(T+273)]$ _____

D. Calculate the overall turbulent mass transfer coefficient, K_L, as follows, (m/s):
$1/K_L = 1/k_L + 1/Keq\ k_G$ _____

E. Calculate the quiescent mass transfer coefficient, K_q, for the impoundment using Form VII.

_____

F. Calculate the overall mass transfer coefficient, KL, for the impoundment as follows:

$$KL = \frac{K_q (A - A_c) + K_c A_c}{A}$$ _____

---

[5]GCA Corporation. Emissions Data and Model Review for Wastewater Treatment Operations. Draft Technical Note. Prepared for U.S. Environmental Protection Agency. Contract No. 68-01-6871, Assignment 49. August 1985. p. 4-3.

[6]Reinhardt, J. R. Gas-Side Mass-Transfer Coefficient and Interfacial Phenomena of Flat-Bladed Surface Agitators. Ph.D. dissertation, University of Arkansas, Fayetteville, Ar. 1977. p. 48

Table 1. Turbulent Areas and Volumes for Surface Agitators[a]

ω, Motor horsepower, hp	A_t, Turbulent area,		Effective depth, ft	V, Agitated volume, ft^3	a_v, Area per volume ft^2/ft^3
	ft^2	m^2			
5	177	16.4	10	1,767	0.100
7.5	201	18.7	10	2,010	0.100
10	227	21	10.5	2,383	0.0952
15	284	26.4	11	3,119	0.0909
20	346	32.1	11.5	3,983	0.0870
25	415	38.6	12	4,986	0.0833
30	491	45.7	12	5,890	0.0833
40	661	61.4	13	8,587	0.0769
50	855	79.5	14	11,970	0.0714
60	1,075	100	15	16,130	0.0666
75	1,452	135	16	23,240	0.0625
100	2,206	205	18	39,710	0.0555

[a]Data for a high speed (1,200) rpm) aerator with 60 cm propeller diameter (d).

Form IX DATA FORM FOR THE ESTIMATION OF THE HENRY'S LAW CONSTANT FOR A COMPOUND IN THE BIOLOGICAL TREATMENT UNIT			
NAME OF THE FACILITY for site specific biorate determination			example
COMPOUND for site specific biorate determination			*methanol*
LISTED HENRY'S LAW VALUE AT 25 degrees Celsius. (Table 1, ratio of mol fraction in gas to mole fraction in water)	1		.2885
TEMPERATURE of the liquid in the unit (deg.C)	2		25
CALCULATION OF K			
Temperature adjusted Henry's law value (equals the value on line 1 if the temperature on line 2 is 25)	3		0.2885
Discuss basis of temperature adjustment			
Temperature in degrees Kelvin. Add 273.16 to the number on line 2. Enter the results here.	4		298.1600
Temperature ratio. Divide 273.16 by the number on line 4. Enter the results here.	5		0.9162
Henry's Law adjustment factor. Multiply the number on line 5 by 0.804 and enter the results here.	6		0.7366
Henry's Law value (g/m3 gas per g/m3 liquid) Multiply the number on line 3 by the number on line 6 and divide the results by 1000. Enter the results here and on Form V line 6.	7		0.000213
Henry's Law value (atm m3 per mol) Divide the number on line 3 by 55555 and enter the results here.	8		0.000005

Form X

DATA FORM FOR THE CALCULATION OF THE HENRY'S LAW CONSTANT FOR A COMPOUND IN A SEALED BATCH TEST

NAME OF THE FACILITY for site specific biorate determination			example
COMPOUND for site specific biorate determination			*methanol*
REACTOR HEADSPACE VOLUME, (L)	1		1
REACTOR LIQUID VOLUME (L)	2		10
TEMPERATURE of the liquid in the unit (deg.C)	3		25

Wastewater compounds are biodegraded by biomass in a sealed batch test. For the compound listed above, a data set of liquid and gas concentrations is measured at four different times during the sealed batch test. The data are entered below, and the ratio of the concentrations for each data set is entered in column E.

A	B	C	D	E	
Data set	Time (hr)	Liquid Conc. (mg/L)	Gas Conc. (mg/L)	K_{eq} D/C	.0002108
1					
2					
3					
4					

Temperature in degrees Kelvin. Add 273.16 to the number on line 3. Enter the results here	4		298.16
Molar ratio. Multiply the number on line 4 by 4.555. Enter the results on line 5.	5		1,358.12
Henry's law value (mg/L gas per mg/L liquid). Enter the average value in column E above on line 6.	6		0.000211
Henry's law value (mole fraction gas per mole fraction liquid) Multiply the number on line 6 by the number on line 5. Enter the results on line 7.	7		0.286563
Expected Henry's law value. Enter the number from Form IX line 3.	8		0.288500

Precision: Discuss any variability of the numbers in column E.
Accuracy: Discuss any difference between the numbers on line 7 and line 8. Identify which value will be used for evaluating the biodegradation rate data. Divide the Henry's law value by the number on line 5 and enter the results on line 9.

K_{eq} value (mg/L gas per mg/L liquid)	9		0.000211
HEADSPACE CORRECTION FACTOR. Divide the number on line 2 by the sum of the number on line 2 and the product of the numbers on line 9 and line 1. Enter the result on line 10.	10		0.999979

The headspace correction factor should equal approximately 1 if the headspace is relatively small. Reducing the headspace volume may improve the test data quality if the headspace correction factor is substantially less than one.

Form XI

DATA FORM FOR THE CALCULATION OF THE HENRY'S LAW CONSTANT AND THE STRIPPING CONSTANT FOR A COMPOUND IN AN AERATED BATCH TEST

NAME OF THE FACILITY for site specific biorate determination			example
COMPOUND for site specific biorate determination			*methanol*
Concentration basis (liquid or gas)			gas
TEMPERATURE of the liquid in the unit (deg.C)	1		25
GAS FLOW RATE (L/hr)	2		1
LIQUID VOLUME (L)	3		10
Co concentration measurement at time=0 (mg/L)	4		

A	B	C	D	E
data point	time (hr)	Concentration, C (mg/L)	C/Co	-ln(C/Co)
1				
2				
3				
4				
5				

CALCULATIONS. Use additional lines as needed in an expansion of the above table. Plot the values in column E (y axis) vs the data in column B (x axis). Reject outliers. Curve fit with a straight line. Calculate the slope and enter the slope on line 7. Attach the plot and table to this form.

Temperature in degrees Kelvin. Add 273.16 to the number on line 1. Enter the results here	5		298.16
MOLAR RATIO. Multiply the number on line 5 by 4.555. Enter the results on line 6.	6		1,358.12
Slope of the plot of -ln(C/Co) vs time (per hour)	7		2.10e-05
Calculated K_{eq} value (mg/L gas per mg/L liquid). Divide the number on line 7 by the number on line 2 and multiply the results by the number on line 3. Enter the results on line 8.	8		0.000210
Expected K_{eq} value. Divide the number from Form IX line 3 by the number on line 6 and enter the results on line 9.	9		0.000212

Discuss any differences between the numbers on line 8 and line 9. Identify which value will be used for the evaluation of the stripping constant (line 10). Problems can sometimes be resolved by system redesign, changing the bubble size, or confirming the experimental value of K_{eq} by using Form X.

K_{eq} value (mg/L gas per mg/L liquid)	10		0.000210
STRIPPING CONSTANT(per hour). Divide the number on line 10 by number on line 3 and multiply by the number on line 2. Enter the final result on line 11.	11		0.000021

The headspace correction factor equals one for an aerated batch test.

Form XII **DATA FORM FOR THE CALCULATION OF BATCH RATES AND THE DETERMINATION OF THE MONOD CONSTANTS**

Complete this table with measured liquid concentrations from the batch test. If headspace concentrations were measured and equilibrium has been verified, convert them to liquid concentrations by using K_{eq}. If the data are scattered, plot the concentration vs. time data, and fit the data with a curve based on Equation Appendix C-4 for the Aerated Batch test or Equation Appendix C-6 for the Sealed Batch test. Complete this form with concentrations obtained from that fitted curve. If the curve fitting approach is used, attach a plot of the data and the associated fitted curve to this form. Note: If the initial results appear to be anomalous, do not use the initial results.

COMPOUND for site specific biorate determination			Methanol
Stripping rate constant (/hr) Form XI, line 11	1		2.1e-5
Enter the batch test Biomass concentration (g/L) on line 2.	2		.258
Headspace correction factor. For a Sealed Batch test use Form X line 10 or 1.00 for an Aerated Batch test.	3		0.999979

A	B	C	D	E	F	G
concentration S (mg/L)	time (hr)	Rate for interval (mg/L-hr) $(a_i-a_{i-1})/(b_{i+1}-b_i)$	Log Mean S for interval (mg/L) $(a_i-a_{i-1})/\ln(a_i/a_{i+1})$	Ratio of rate to S (/hr) (C/D)	Adjusted rate (/hr) (E-line 1)	Reciprocal of adj. rate (hr) (1/F)
1.						
2.						
3.						
4.						
5.						
6.						
7.						
8.						
9.						

Continue table on attached sheet as needed. Plot values in column G on y axis, values in column D on x axis. Extrapolate the trend of data points to the y intercept (S=0). Attach the plot to the form.

Slope of line near intercept (hr-L/mg)	4		.4845
Y intercept from plot (hr)	5		1.938
First order rate constant K1 (or Qm/Ks, L/g-hr). The number 1.00 divided by the products of the values on line 5, line 2, and line 3.	6		2.000026
Zero order rate constant (Qm, /hr). The number 1.00 divided by the products of the values on line 4, line 2, and line 3.	7		8.000104
Concentration applicable to full-scale unit. Enter on line 8.	8		5
Effective biorate K1 ESTIMATE (L/g MLVSS-hr)*	9		0.9606

*Match the concentration on line 8 to the values in Column D and look up the equivalent rate in Column F. Divide the result with both the biomass concentration (line 2) and the headspace correction factor (line 3). Enter this value on line 9. Do not use this method to estimate K1 for line 9 if the data quality is poor in Column F. The number on line 9 is multiplied by the biomass and the system concentration to estimate the full scale biorate. Alternatively, the Monod model parameters may be used.

FORM XIII. DATA FORM FOR THE ESTIMATION OF MULTIPLE ZONE BIODEGRADATION FROM UNIT CONCENTRATIONS

NAME OF THE FACILITY for site specific biorate determination		
COMPOUND for site specific biorate determination		
Number of zones in the biological treatment unit	1	
VOLUME of full-scale system (cubic meters)	2	
Average DEPTH of the full-scale system (meters)	3	
FLOW RATE of wastewater treated in the unit (m3/s)	4	
Recycle flow of wastewater added to the unit, if any (m3/s)	5	
Concentration in the wastewater treated in the unit (mg/L)	6	
Concentration in the recycle flow, if any (mg/L)	7	
Concentration in the effluent (mg/L).	8	
TOTAL INLET FLOW (m3/s) line 4 plus the number on line 5	9	
TOTAL RESIDENCE TIME (s) line 2 divided by line 9.	10	
TOTAL AREA OF IMPOUNDMENT (m2) line 2 divided by line 3	11	

Zone number	Concentration for zone, Ci (mg/L)	Area of the zone, A (m2)	Estimate of KL in the zone (m/s) from Form II	AIR STRIPPING KL A Ci (g/s)
1				
2				
3				
4				
5				
6				
7				
8				
9				
10				
TOTALS sum for each zone.	12		13	

Removal by air stripping (g/s). Line 13.	14	
Loading in effluent (g/s). Line 8 times line 9.	15	
Total loading (g/s). (Line 5 * line 7) + (line 4* line 6).	16	
Removal by biodegradation (g/s) Line 16 minus (line 14 + line 15).	17	
Fraction biodegraded: Divide line 17 by line 16..	18	
Fraction air emissions: Divide line 14 by line 16.	19	
Fraction remaining in unit effluent: Divide line 15 by line 16.	20	

[62 FR 2801, Jan. 17, 1997, as amended at 63 FR 67794, Dec. 9, 1998; 66 FR 6935, Jan. 22, 2001]