TECHNICAL EVALUATION
&
PRELIMINARY DETERMINATION

APPLICANT

Klausner Holding USA Inc.
1279 Professional Drive, Suite 202
Myrtle Beach, South Carolina 29577

Suwannee Mill
ARMS Facility ID No. 1210468

PROJECT

Project No. 1210468-001-AC

700 Million Board Feet Lumber Production Facility

COUNTY

Suwannee County, Florida

PERMITTING AUTHORITY

Florida Department of Environmental Protection
Division of Air Resource Management
Office of Permitting and Compliance
Chemical and Combustion Group
2600 Blair Stone Road, MS#5505
Tallahassee, Florida 32399-2400

March 2012

1. APPLICATION INFORMATION

1.1. Applicant Name and Address

Klausner Holding USA Inc.
1279 Professional Drive, Suite 202
Myrtle Beach, South Carolina 29577

Authorized Representative: Mr. Michael Funk, CEO

1.2. Permitting Schedule

- January 9, 2012: Received an air construction permit application from Klausner Holding USA Inc.
- February 8, 2012: Application deemed complete.
- March 2012: Department issued Draft Permit Package.

1.3. Facility Location

Klausner Holding USA Inc. (Klausner) is proposing to construct a Greenfield lumber production facility with a Standard Industrial Classification (SIC) Code of 2421 in Suwannee County, Florida called the Suwannee Mill. The proposed Suwannee Mill will include a log receiving and storage area, log debarkers, a sawmill, indirectly heated drying kilns utilizing hot water generated by two biomass and four natural gas boilers, a planer mill, and a lumber loadout area.

The facility will be located in Suwannee County at a site approximately 1.5 miles east of the intersection of U.S. Highway 90 and 185th Road. The Universal Transverse Mercator (UTM) coordinates of the facility are 297.6 kilometers (km) east and 3,360.7 km north (UTM Zone 17, NAD83). The location of Suwannee County is shown in Figure 1 with the location of the site within the county shown in Figure 2.

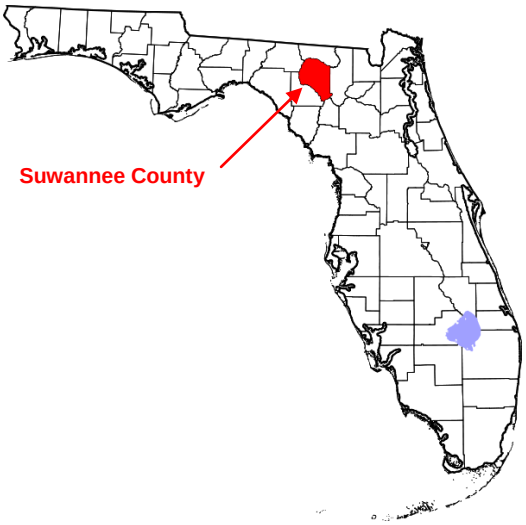

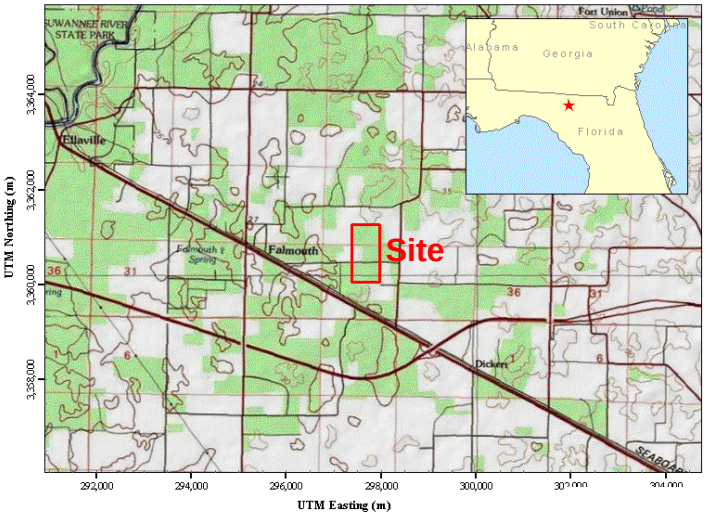

Figure 1 – Suwannee County, Florida **Figure 2 – Map of Suwannee County with Location of Site**

An aerial view of a Klausner sawmill near Kodersdorf, Germany that is similar to the proposed Suwannee Mill is given in Figure 3. The nearest Prevention of Significant Deterioration (PSD) Class I area to the propose Suwannee Mill is the Okefenokee National Wildlife Refuge (ONWR). As shown in Figure 4, the ONWR is located approximately 67 km northeast of the site and sits immediately north of the Florida Georgia border.

The new Suwannee Mill will have a maximum annual production of 700 million board feet of lumber per year (MMBF/year). The mill will be operational 8,760 hours per year, and will directly create approximately 350 full-time jobs at the mill during operation. In addition, at least 220 indirect jobs will be created in the supply chain for the mill.

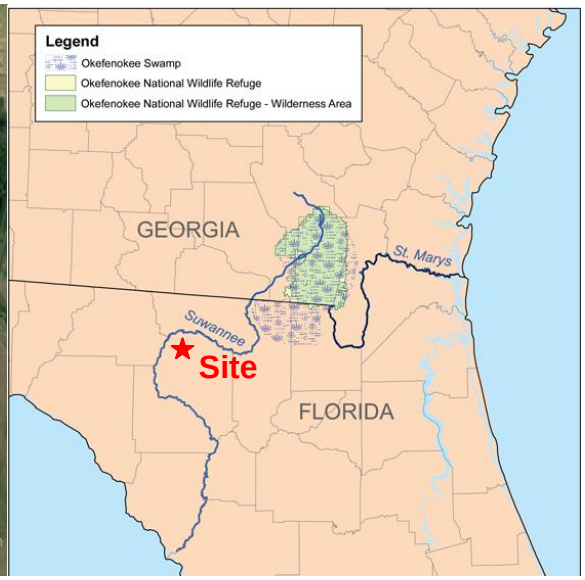

Figure 3 – Aerial View of Sawmill in Germany **Figure 4 – Location of ONWR**

1.4. Project Description

The Suwannee Mill will have the potential to emit various criteria pollutants, hazardous air pollutants (HAP), and greenhouse gases (GHG). Due to the potential emissions of volatile organic compounds (VOC) and carbon monoxide (CO) each exceeding 250 tons per year (TONS/YEAR), the proposed Suwannee Mill will be a new major stationary source as defined in Rule 62-210.200(189)(2) of the Florida Administrative Code (F.A.C.). A more detailed discussion of applicable Federal and State regulations is presented in Section 3.

As described by the applicant, the proposed mill will process tree length saw logs received from local sources into multidimensional lumber. The logs will be received via trucks or rail, and the lumber produced, as well as saleable by-products, will be shipped off-site via trucks or railcars. A general process flow diagram of the facility is provided below in Figure 5 below.

The new Suwannee Mill will produce multi-dimensional, dried lumber and byproducts, such as bark, wood chips, sawdust and dry shavings. The proposed Suwannee Mill will include the following major activities:

- Log storage and processing;
- Sawmill operations;
- Sorter line operations;
- Biomass fired hot water heaters (boilers);
- Natural gas fired hot water heaters (boilers);
- Drying kilns;
- Planer mill operations;
- Lumber loadout;
- Miscellaneous support equipment (e.g., emergency engines); and,
- Insignificant activities (e.g., diesel storage tank).

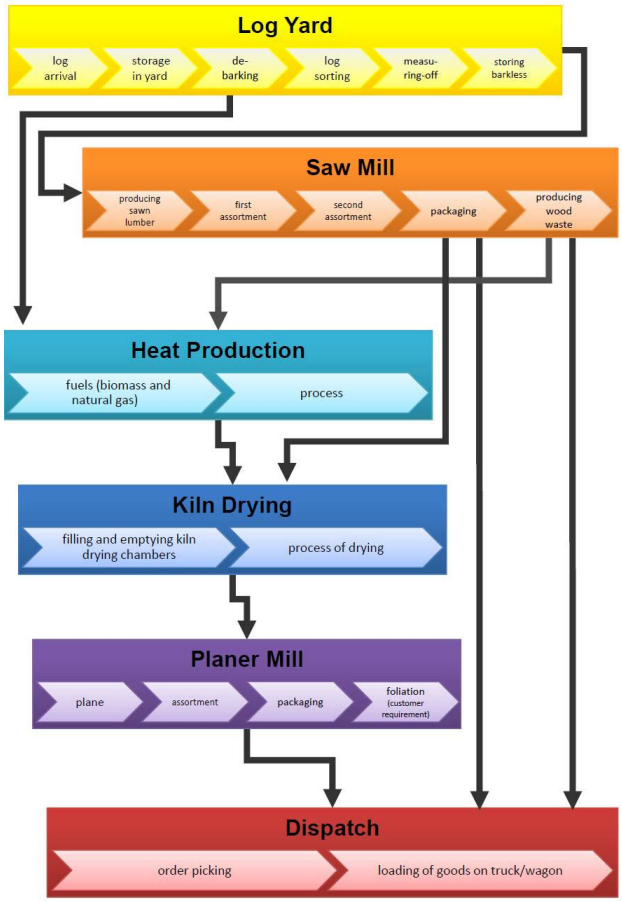

Figure 5 – Suwannee Mill General Process Flow Diagram

1.5. Facility Emission Units

Table 1 indicates the emissions units (EU) associated with this project. Each of these emission units will be discussed in more detail in Section 3.

Table 1. - EU at Klausner Sawmill.

Facility ID No. 1210468	
EU ID No.	**Emission Unit Description**
001 & 002	Two Biomass Boilers #1 & 2
003 - 006	Four Natural Gas Fired Boilers #3 - 6
007	Four Blocks of Drying Kilns #1 – 4
008	Two Planer Mill Lines #1 & 2 with Two Dry Shaving Silos #1 & 2
009	Sorter Lines and Trimmers
010	Biomass Boiler Flyash Silo
011	Log Storage, Processing, and Sawmills
012	Five Emergency Generators #1- 5
013	Miscellaneous Storage Tanks

2. PROCESS DESCRIPTION

2.1. Process Heat (EU 001, through 006)

Process heat to generate hot water for the drying kilns is supplied by a total of six boilers. Two biomass boilers are fueled by biomass byproducts from the Suwannee Mill or clean untreated biomass obtained off-site. The remaining four boilers are natural gas fired units. During construction of the Suwannee Mill, the natural gas boilers will be constructed and brought online first in a modular fashion. The biomass boilers will be constructed and brought online last when the additional process heat is required. A schematic of the process heat generation EU is shown in Figure 6 below.

2.1.1. Biomass Boilers (EU 001 and EU 002)

Hot water is used as the heat transfer fluid to indirectly provide heat to the drying kilns. The hot water is generated by six boilers. The biomass boilers at the Suwannee Mill will be fueled with bark, wood chips, wood shavings and sawdust that is generated from the mill that is not sold as a byproduct. The boilers will also use clean, untreated woody biomass as fuel that is obtained from off-site sources. The two biomass boilers each have a design heat input capacity of 120 million British thermal unit per hour (MMBtu/hour), with a maximum hot water output from all fuel combinations of 241,454 gallons/hour on a 4-hour average basis.

The biomass fuel is transferred via front end loaders from the respective storage areas for the bark, wood chips, wood shavings and sawdust to an open top fuel storage bin. The fuel is conveyed from the storage bin to the boilers at a controlled rate. The boilers utilize a Dutch oven design that is common in the wood products industry due to the variety and high moisture content of the biomass fuels. The following delineates the combustion process in the Dutch oven boiler:

1. Fuel is introduced via a gravity drop to a hydraulic ram;
2. The hydraulic ram pushes the fuel onto a step grate system within the initial refractory lined primary chamber, where a three stage process of drying, pyrolysis and final combustion begins;
3. In the first step, the wet fuel is dried and heated by the combustion gases and radiation from the heated refractory;
4. Once the fuel is dry midway down the step grates, the fuel undergoes a pyrolysis process, reducing the wood to hydrocarbon and CO gases;
5. The hydrocarbon and CO gases are carried into the secondary chamber, where the combustion process is completed with the introduction of secondary combustion air; and,
6. Exhaust gases from the boiler pass through the hot water heater, with the resulting hot water used in the lumber drying kilns.

The design of the Dutch oven boiler relies on a large amount of refractory for thermal inertia. As such, these units can efficiently sustain combustion of wet biomass, but are unable to respond quickly to changes in heat demand. Similarly, the startup process will occur over several hours. It should be noted that the proposed units will not utilize a supplemental fossil fuel, such as natural gas or fuel oil for startup or stabilization.

2.1.2. Natural Gas Boilers (EU 003 through EU 006)

In addition to the two Dutch oven biomass boilers, the Suwannee Mill will also utilizes four natural gas fired boilers. Each boiler will have a design heat input rate of 46 MMBtu/hour solely from natural gas with a maximum hot water output from each boiler of 120,727gallons per hour on a 4 hour average basis. The natural gas boilers will exhaust through two stacks (two boilers per stack). The combined natural gas usage in all four gas boilers will be limited to 1,360 million cubic feet (ft^3) in any consecutive 12 month period.

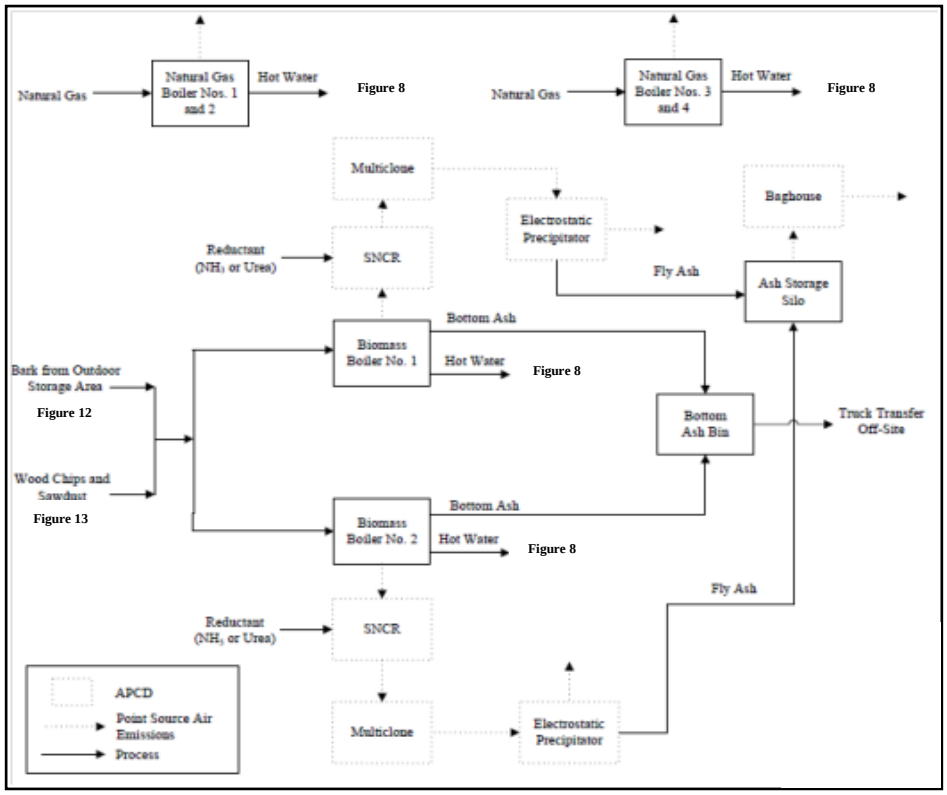

Figure 6 – Schematic of Process Heat Generation

2.2. Lumber Drying Kilns (EU 007)

2.2.1. Kiln Operation

Klausner proposes to construct four kiln blocks to process rough sawn lumber. The four indirectly-heated drying kiln blocks reduce the moisture content under carefully controlled temperature and relative humidity conditions. There are multiple kilns within each block. Kiln Block 1 has 12 kilns and Blocks 2, 3, and 4 have 16 kilns each.

Figure 7 - Loading Lumber into Drying Kilns

The Lumber kilns will use hot water to conduct radiant heat to the green rough sawed lumber and reduce the moisture content. Typical design parameters for the drying kilns include two exhaust vents to the atmosphere with a total of 120 vents from the 60 drying kilns. The total volume of each kiln is 250 cubic meters (m^3) or 8830 ft^3.

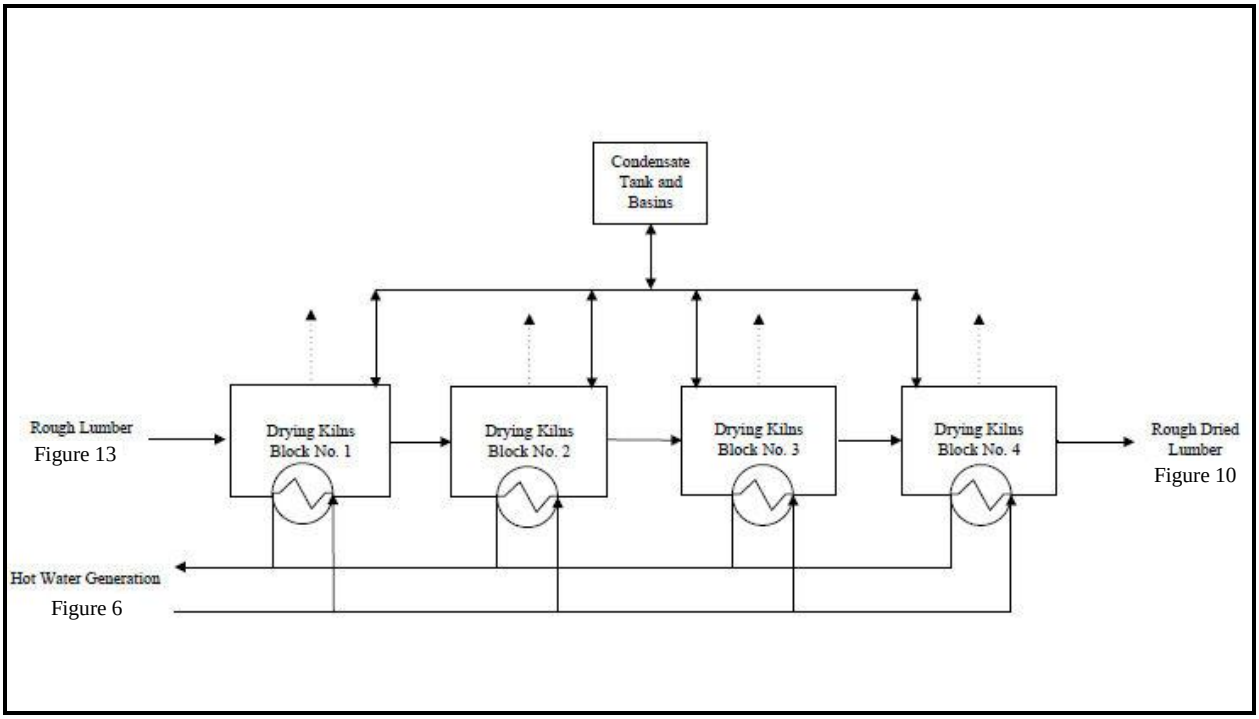

Figure 8 - Kiln Blocks Flow Diagram

Green rough sawn lumber that has moisture content of 50% or greater are transferred from sawmill via motorized vehicle to the drying kilns. During the 2.3 to 10 days of drying the moisture content of the wood is reduced to between 8 to 20% depending on market requirements.

The lumber is stacked and loaded into the drying kilns via mobile equipment from the sawmill building. After the kilns are loaded with lumber the doors are shut and the drying process is begun. Hot water from the boilers is piped to the kilns and the air is circulated with blowers. Condensation that is recovered from the drying lumber is retained and collected in basins or transferred to holding tanks as required. At the end of the drying process, the kilns are equalized and condensate is reabsorbed into the dried lumber from the condensate basins.

The total kiln volume is 250 m^3 for each drying cycle. The dried lumber is either, directly graded and packaged, or the lumber is transported from the kilns via mobile equipment to the planer mill building for further processing. Exhaust gases from the lumber drying process contain VOC and organic HAP released during the drying process due to the increase in lumber temperature. Each of the drying kilns includes two exhaust vents to the atmosphere with a total of 120 vents from the 60 drying kilns.

Figure 9 - Aerial View of Two Kiln Blocks with Pairs of Roof Vents per Kiln

2.3. Planer Mill Lines with Dry Shaving Silos (EU 008)

The final two processes that occur at the Suwannee Mill are the planing of the dried lumber and the final processing, sorting, storage and loadout of the final lumber products. Loadout will be via railcars and trucks. A schematic of this EU is shown in Figure 10.

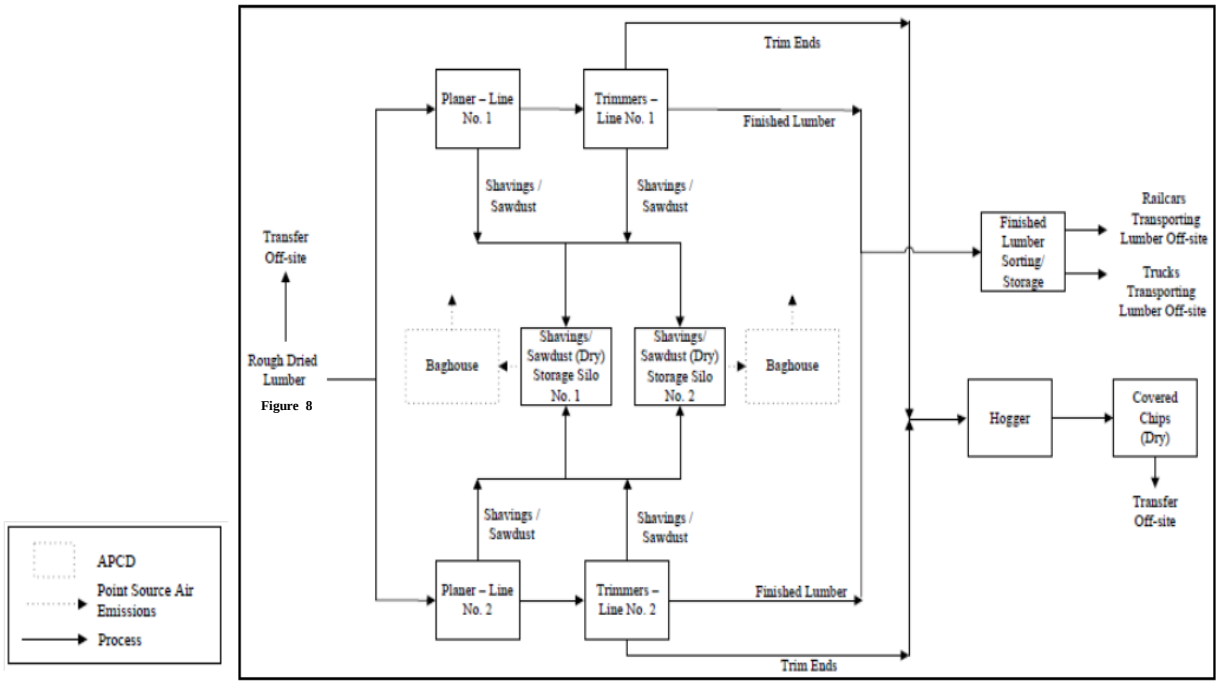

Figure 10 – Schematic Planer Mill, Sorting, and Lumber Loadout Operation

2.3.1. Planer Mill

Kiln dried lumber is either transported from the drying kilns to the planer mill building or shipped off site as dried rough sawn lumber. Finished boards are planed and trimmed in the planer mill where there are two parallel planer lines. Following to the planer, boards are sorted in trimmed in the sorter line building. Subsequent to the planers, each line has trimmers, which are located downstream of the planers, and inside the sorter line building. The sorter line building will be equipped with an open chain conveyor system to move the final lumber on the two sorter lines. Final lumber is packaged and then transported to a designated storage area.

In addition to being located inside a structure, the planer operations are equipped with local exhaust ventilation to collect dry wood shavings and sawdust. The permittee estimates that a maximum of 640,000 m^3/year of shavings will be generated from the planer mill operations.

The collected dry shavings from the two planer and sorter lines are transferred via the exhaust ventilation system into two storage silos located outside the planer mill building, each with a storage capacity of approximately 56,000 ft^3. Shavings and sawdust from both planer/sorter lines can be transferred to either storage silo. PM from the exhaust ventilation system and silos are controlled by baghouses on top of each silo. From the storage silos, the dry shavings and sawdust will be gravity fed into trucks for shipment offsite.

2.3.2. Lumber Loadout

The rough cut and finished lumber board products are graded, sorted by length, packaged and stored in the lumber storage area. Depending upon customer specifications, mold protection colors, ink, or lacquer may be applied to the finished lumber and/or packaging within the process building. Klausner may use different colors, inks, and lacquers based on customer requests.

2.4. Sorter Lines and Trimmers (EU 009)

A schematic of the sorter line EU is shown in Figure 10. Following the planer lines, dried lumber is sorted according to quality and length in one of two sorting lines that are located inside the sorter line building. Each sorter line has trimmers for trimming the board length. The trim ends gravity feed to a conveyance system, which transfers the trim ends to a hogger to reduce the ends to the desired size.

The hogger is powered by an electric motor and is located inside the byproduct screening building. The sized wood from the hogger is transferred into the byproduct screening building to be combined with the chips from sawmill. The combined chips are stored in silos. In addition, an exhaust ventilation extraction system collects sawdust generated from the sorter line trimmers. The ventilation extraction system conveys the sawdust to the byproduct screening building which is controlled by a baghouse to minimize emissions of particulate matter (PM). The baghouse captures the saw dust which is then transferred to the vibrating belt screening system in the sawmill building. The saw dust is then conveyed to the saw dust storage area.

2.5. Biomass Boiler Flyash Silo (EU 010)

Flyash collected in the biomass boiler ESP and multicyclone is transferred by enclosed conveyors to the flyash storage silo. The silo is unloaded by gravity feed into trucks for disposal offsite. A baghouse is installed on the silo to control particulate emissions from the conveyor feed and truck loading. Flyash collected in the ESP will be transferred via enclosed conveyors (e.g., screw conveyors) to an ash silo.

Emissions of $PM/PM_{10}/PM_{2.5}$ from the flyash silo will be controlled by a baghouse during loading and unloading operations.BMP will be utilized while processing flyash to minimize $PM/PM_{10}/PM_{2.5}$ emissions.

A schematic of the flyash processing system is shown in Figure 11.

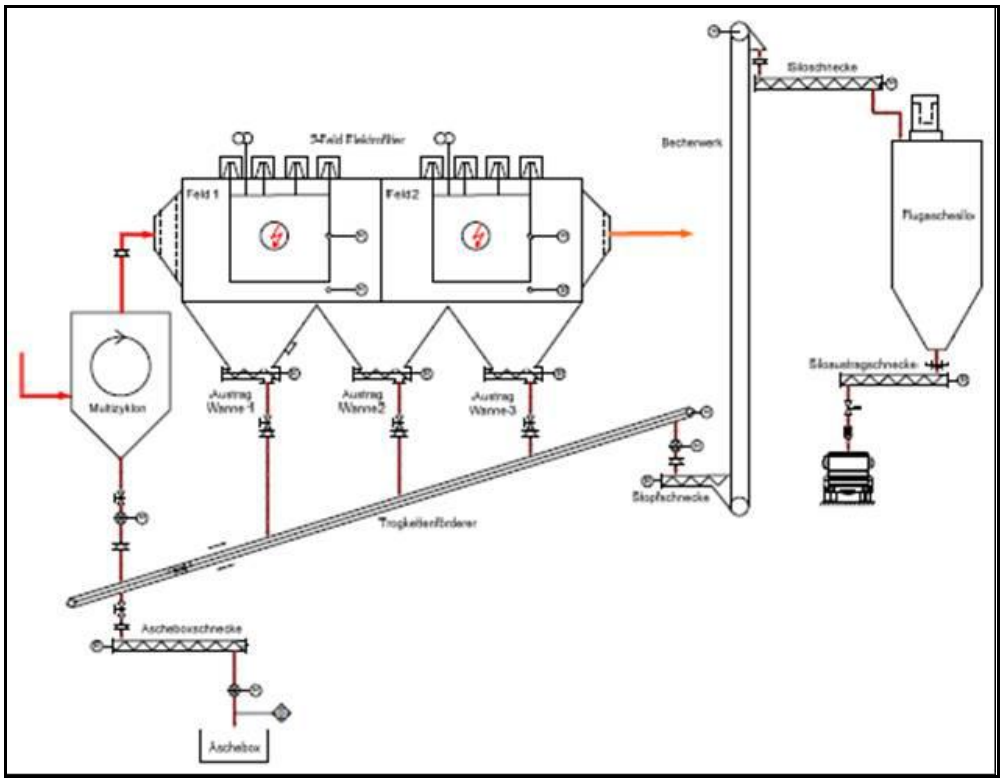

Figure 11 – Flyash Handling System Schematic

2.6. Log Storage, Processing and Sawmills (EU 011)

2.6.1. Log Storage and Processing

A schematic of the lumber storage and processing is shown in Figure 12. Wood is transported to the Suwannee Mill as tree length saw logs (typically Southern yellow pine). Log trucks are unloaded via mobile equipment to the onsite log storage area.

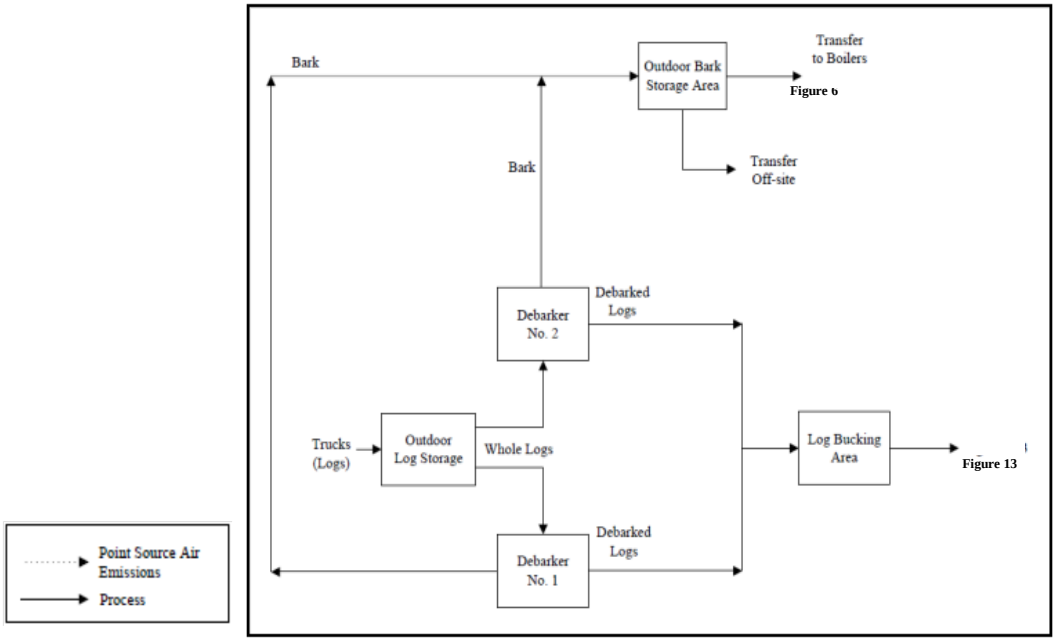

Figure 12 – Schematic of Green Log Storage and Processing

The logs are either fed directly into the debarker, or they are stacked and remain in an approximate 430,000 square feet (ft^2) storage area until required for the lumber mill production operation. Received logs will be stored in rows comprising a total storage capacity of approximately 17,500 tons. Incoming logs will have a moisture content of approximately 50 percent (%) or greater. A log loader will transfer logs from the log storage area onto the in-feed table of the two debarking units, where the bark on the logs is removed.

The bark from the debarking process gravity feeds onto a conveyor underneath the debarkers. Separated bark is transferred to a storage area of approximate of 40,000 ft^2 located outside the log processing building. The bark will be used as fuel in the biomass boilers or sold as a byproduct. These debarkers are able to generate approximately 211,000 tons/year of bark depending on the diameter of the processed logs. The bark will have a moisture content of greater than 40%. The debarked logs are conveyed out of the log processing building into boxes. Once segregated into boxes, the debarked logs are transferred by mobile equipment to intermediate storage stacks, prior to being fed into sawmill.

2.6.2. Sawmill Operations

A schematic of the sawmill operations is shown in Figure 13. A log loader transfers the debarked logs from the storage area into the sawmill building. A conveyor system inside sawmill building transfers the logs through the saw lines. The two saw lines process the logs into the required lumber sizes.

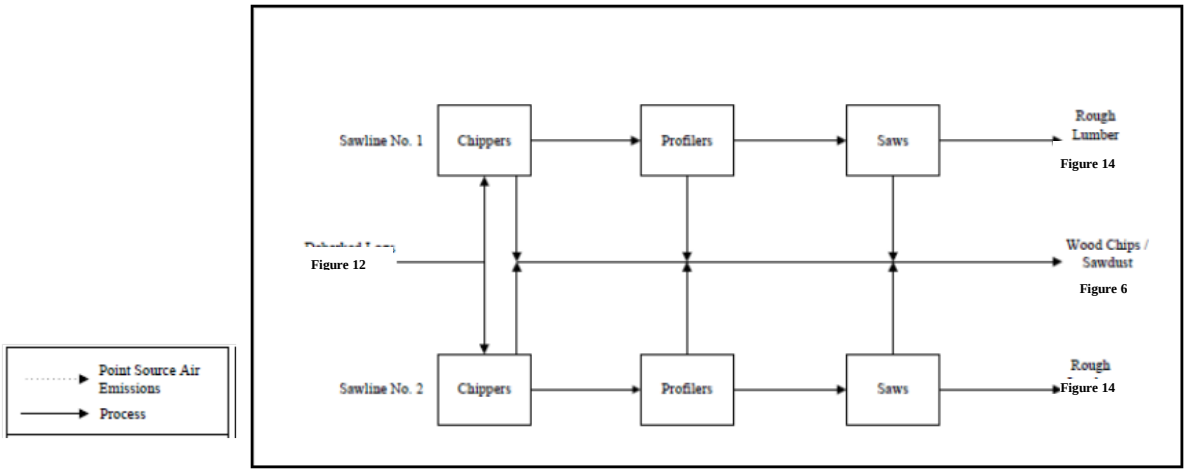

Figure 13 – Schematic of Sawmill Operations

Chips and sawdust generated from the saw lines feed via gravity onto a separate conveyance system from the processed wood (sawed lumber). A vibrating belt screening system separates the chips and sawdust that was generated in the sawmill building. The potential throughput for the vibrating belt is approximately 4 million cubic meters per year (m^3/year). The wet wood chips are transferred out of the byproduct screening building via conveyor directly into an outdoor storage area.

The potential annual output of wood chips is approximately 2.3 million m^3/year, and the storage area size is approximately 12,000 ft^2. The wet sawdust is transferred to a separate covered storage area adjacent to the byproduct screening building. The maximum output of sawdust is approximately 1.7 million m^3/year. The wood chips and sawdust are either used as fuel in the biomass boilers or sold as a byproduct. Both the wood chips and sawdust will have a moisture content of approximately 50%.

2.6.3. Green Lumber Sorting and Trimming Lines

Refer to Figure 14. Green rough cut green dimensional lumber is sorted according to quality and length and then trimmed to market specifications in the four sorting and trimming lines. Green sorted lumber is then stacked and loaded into the kilns to be dried or shipped as rough sawn lumber. Log trimmings are separated by gravity conveyor to the hogger (grinder) unit to be combusted in the biomass boilers or shipped off site for sale.

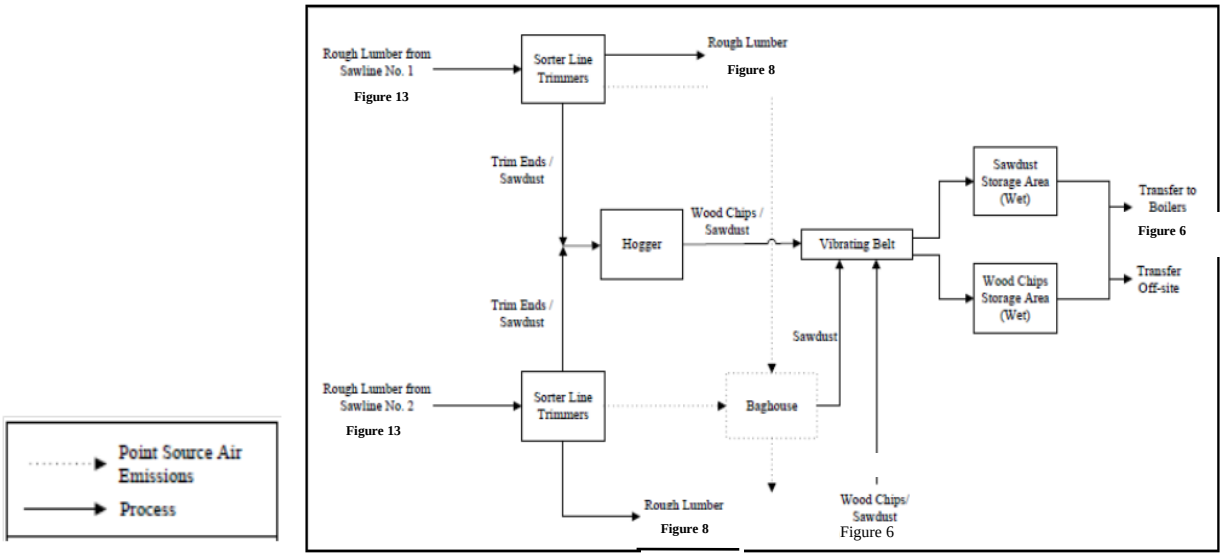

Figure 14 – Schematic of the Green Lumber Sorter Line Operations

2.7. Emergency Generators and Miscellaneous Storage Tanks (EU 012 and EU 013)

Five diesel fired emergency engines (generators and fire pumps) will be installed at the Suwannee Mill. The power output capacity for each engine is nominally 343 kilowatts (kW). The permittee will limit the operation of each emergency engine for maintenance checks and readiness testing to no more than 100 hr/year. Three 265 gallon and two 10,000 gallon emergency engine diesel storage tanks will provide fuel to the emergency engines. Per the applicant's request, the combined diesel fuel usage in all emergency equipment will be limited to 71,500 gallons per year (gal/year) during any 12 consecutive period. Fuel consumption records must be kept on site and available to the Compliance Authority for inspection to ensure this limit is not exceeded.

2.8. Additional Project Features

The proposed facility will utilize the following control devices and techniques to control air pollutants, as described below:

2.8.1. Log, Biomass (Bark, Sawdust, Wood Chips and Wood Shavings), Lumber Processing and Storage

- Employment, where possible and practicable of a first-in/first out (FIFI) of biomass fuel with the conveyance system utilizing minimal drop lengths to minimize dust generation, biological degradation and odors.
- Implementation of a Best Management Practices (BMP) plan to minimize fugitive dust, odors, and fire dangers and to ensure the quality of biomass fuel. A preliminary BMP plan was submitted by the applicant and is included in the permit as Appendix BMP.
- Other reasonable precautions as described in Rule 62-296.320(4)(c), F.A.C.

2.8.2. Biomass Boilers

- Emissions of $PM/PM_{10}/PM_{2.5}$ from the biomass boilers will be controlled by multiple cyclone collectors and electrostatic precipitators (ESP).
- SO_2 and sulfuric acid mist (SAM) from the biomass boilers will be controlled by use of inherently low sulfur biomass fuels.
- NO_X from the biomass boilers will be controlled by good combustion practices (GCP) and urea based selective non-catalytic reduction (SNCR) systems located in the boiler furnaces.
- Emissions of CO and VOC from the biomass boilers will be controlled by GCP.
- Emissions of HAP from the biomass boilers will be controlled by GCP, use of untreated woody biomass (inherently low in chloride) and ESP.

2.8.3. Natural Gas Boilers

- NO_X will be controlled with low NOX burners, flue gas recirculation (FGR) and GCP.
- SO_2, VOC, $PM/PM_{10}/PM_{2.5}$ and CO will be controlled by GCP and the use of clean natural gas as the only permitted fuel.

2.8.4. Emergency Support Equipment

- The emergency diesel engines (generators and fire pumps) will be designed to meet the emission limits given in NSPS Subpart IIII and NESHAP Subpart ZZZZ to control NO_X, PM and CO.
- Ultralow sulfur distillate (ULSD) fuel oil with a sulfur content of 0.0015% or less will be used in the emergency equipment to control PM and SO_2. Operation will be limited to 100 hr/year for testing and maintenance purposes and a limit of diesel fuel usage will be required.

2.9. Project Emissions

Tabulations of project emissions are given and discussed in conjunction with major source review applicability analysis in Sections 3.3, 3.4 and 3.5 below.

3. APPLICABLE REGULATIONS

3.1. State Regulations

Projects at stationary sources with the potential to emit air pollution are subject to the applicable environmental laws specified in Section 403 of the Florida Statutes (F.S.). The statutes authorize the Department of Environmental Protection (Department) to establish regulations regarding air quality as part of the Florida Administrative Code (F.A.C.), which includes the following applicable chapters:

Table 2 - Applicable Rules from the F.A.C.

Chapter	Description
62-4	Permits
62-204	Air Pollution Control – General Provisions
62-210	Stationary Sources of Air Pollution – General Requirements
62-212	Stationary Sources – Preconstruction Review
62-213	Operation Permits for Major Sources (Title V) of Air Pollution
62-214	Requirements for Sources Subject to the Federal (Title IV) Acid Rain Program
62-296	Stationary Sources – Emission Standards
62-297	Stationary Sources – Emissions Monitoring

3.2. Federal Regulations

The U.S. Environmental Protection Agency (EPA) establishes air quality regulations in Title 40, Code of Federal Regulations, part 60 (40 CFR 60) that identifies New Source Performance Standards (NSPS) for a variety of industrial activities. 40 CFR 61 specifies National Emission Standards for Hazardous Air Pollutants (NESHAP). 40 CFR 63 specifies NESHAP provisions based on the Maximum Achievable Control Technology (MACT) for given source categories.

Federal regulations adopted by reference are given in Rule 62-204.800, F.A.C. State regulations approved by EPA are given in 40 CFR 52, Subpart K – Florida, also known as the State Implementation Plan (SIP) for Florida.

3.3. PSD Major Stationary Source Applicability Determination

The Department regulates major stationary sources in accordance with Florida's PSD program pursuant to Rule 62-212.400, F.A.C. PSD preconstruction review is required in areas that are currently in attainment with the state and federal ambient air quality standards (AAQS) or areas designated as "unclassifiable" for these regulated pollutants.

Commonly addressed PSD pollutants in the wood products industry include: CO, NO_X, PM, PM smaller than 10 micrometers (µm) (PM_{10}), PM smaller than 2.5 µm ($PM_{2.5}$), SO_2, VOC, SAM, lead (Pb), fluorides (F), and mercury (Hg).

Additional PSD pollutants that are more common to certain other industries include: hydrogen sulfide (H_2S), TRS including H_2S, reduced sulfur compounds (RSC) including H_2S, municipal waste combustor (MWC) organics measured as total tetra- through octa-chlorinated dibenzo-p-dioxins and dibenzofurans (dioxin/furan), MWC metals measured as PM; MWC acid gases measured as SO_2 and HCl, and municipal solid waste (MSW) landfill emissions as non-methane organic compounds (NMOC).

As defined in Rule 62-210.200(189)(a)1, F.A.C., a stationary source is a "major stationary source" (major PSD source) if it emits or has the potential to emit (PTE):

- 250 tons per year (tons/year) or more of any PSD pollutant; <u>or</u>
- 100 tons/year or more of any PSD pollutant <u>and</u> the facility belongs to one of the 28 listed PSD major facility categories.

The list given in the citation does not include the sawmill category. The Suwannee Mill is a major stationary source based on the potential to emit 250 tons/year or more of several individual PSD pollutants.

For major stationary sources such as the Suwannee mill, PSD applicability for modification projects is based on thresholds known as the significant emission rates (SER) as defined in Rule 62-210.200(275), F.A.C. and listed in Table 3.

Any "net emissions increase" as defined in Rule 62-210.200(204), F.A.C. of a PSD pollutant from the project that equals or exceeds the respective SER is considered "significant". SER also means any emissions rate or any net emissions increase of a PSD pollutant associated with a major stationary source or major modification which would construct within 10 km of a Class I area and have an impact on such area equal to or greater than 1 gram/m^3, 24-hour average.

Although a facility may be "major" (i.e. emits or has the potential to emit 100 or 250 TPY as applicable) for only one PSD pollutant, a project must include BACT controls for any PSD pollutant that exceeds the corresponding SER given in Table 3.

Table 3 - List of Significant Emissions Rates (SER) by PSD-Pollutant [1]

Pollutant	SER (tons/year)	Pollutant	SER (tons/year)
CO	100	NO_X	40
PM	25	PM_{10}	15
$PM_{2.5}$	10	Fluoride	3
Ozone (NO_X) [2]	40	Ozone (VOC) [2]	40
SO_2	40	SAM	7
Mercury	0.1	Greenhouse Gases (GHG)	75,000 [3]

1. Excluding those defined exclusively for MWC and MSW landfills.
2. Ozone (O_3) is regulated by its precursors (VOC and NO_X).
3. As carbon dioxide equivalent (CO_2e). GHG are regulated by the US EPA and not the Department.

3.4. PSD Applicability for the Project

The project is located in Suwannee County, which is in an area that is currently in attainment with the state and federal AAQS or otherwise designated as unclassifiable.

Table 4 summarizes the applicant's estimates of key regulated air pollutants from the Suwannee Mill. Greenhouse gas (GHG) emissions expressed as equivalent carbon dioxide (CO_2e) emissions are also included for comparison with federal greenhouse gas PSD applicability criteria.

Table 4 – Applicant's Estimated PTE of Key PSD Pollutants (in tons/year) for the Suwannee Mill.

Source	PM [1]	PM_{10} [1]	$PM_{2.5}$ [1]	VOC	NO_X	CO	SO_2	Pb	SAM	CO_2e [3]
Natural Gas Boilers	5.17	3.47	3.47	2.08	25.0	27.0	0.4	≤0.1	---	69,519
Biomass Boilers	33.6	33.6	33.6	17.87	147.0	420.0	26.3	0.05	0.97	4,700 (209,684)
Drying Kilns	7.70	4.47	1.46	1,304.0	---	---	---	---	---	---
Flyash Silo	0.10	0.06	0.03	---	---	---	---	---	---	---
Sorter Line Trimmers	5.75	2.18	1.09	---	---	---	---	---	---	---
Shaving Storage Silos (2)	18.80	7.14	3.58	---	---	---	---	---	---	---
Emergency Engines	0.19	0.19	0.19	3.78	3.78	3.31	≤0.1	---	---	661
Storage Tanks	---	---	---	0.02	---	---	---	---	---	---
Miscellaneous Equipment	---	---	---	11.5	---	---	---	---	---	---
Project Total PTE All Sources	71.3	51.1	43.5	1,339.4	176	451	26.7	0.1	0.97	74,880
PSD [2]	**Yes**	**Yes**	**Yes**	**Yes**	**Yes**	**Yes**	**No**	**No**	**No**	**No**

1. PM, PM_{10} and $PM_{2.5}$estimates includes filterable and condensable (back-half) particulate matter. $PM_{2.5}$ is not a PSD pollutant under current Florida rules.
2. Triggers PSD requiring a BACT determination (Yes/No)?
3. CO_2 from biomass combustion has been deferred by EPA until the second half of 2014. Consequently, only 4,700 tons/year (of the 209,684 tons/year emitted by the biomass boilers) count toward the federal PSD threshold of 75,000 tons CO_2e/year.

The Suwannee Mill exceeds the PSD thresholds for PM, PM_{10}, $PM_{2.5}$, VOC, NO_X and CO requiring a corresponding BACT determination for each pollutant.

3.5. Major Source of Air Pollution (Title V Source) Determination

As defined in Rule 62-210.200(188), F.A.C., a Title V source is an emissions unit or group of emissions units that directly emits, or has a PTE of, 100 tons/year or more of any regulated air pollutant. The Major (Title V) Source of Air Pollution definition also includes, any emissions unit or group of emissions units that (except for radionuclides) emits or has the PTE of, in the aggregate, 10 tons/year or more of any one HAP, 25 tons/year or more of any combination of HAP, or any lesser quantity of a HAP as established through EPA rulemaking. Specific HAP are defined/listed in Rule 62-210.200(155), F.A.C.

The emissions estimates given in Table 4 are sufficient to conclude that the Suwannee Mill will be a Title V source based on emissions of regulated air pollutants regardless of HAP emissions.

3.6. HAP Major Source Determination

The Department regulates major sources of HAP in accordance with applicable portions of 40 CFR 63 adopted in Rule 62-204.800(11), F.A.C. The applicant believes that the proposed Suwannee Mill project will have the PTE of a single HAP that is equal to or greater than 10 tons/year and of all aggregated HAP equal to or greater than 25 tons/year. Specifically, the Suwannee Mill has the PTE of methanol (73.5 tons/year), formaldehyde (10.4 tons/year), and hydrogen chloride (19.98 tons/year) greater than 10 tons/year with the total PTE of HAP of 124 tons/year which is greater than 25 tons/year threshold. Consequently, the Suwannee mill is a major source of HAP.

Estimates by the applicant of HAP from at the Suwannee Mill with emission rates approximately equal to or greater than 1.0 tons/year are provided in Table 5.

Table 5 – Applicant's Estimated PTE of HAP from the Suwannee Mill in tons/year.

HAP [1]	HCl	CH_3OH	C_6H_{14}	CH_3CHO	C_3H_4O	C_6H_6	CH_2O	Mn	C_8H_8	$C_6H_5CH_3$
Rate	19.97	74.4	1.22	3.61	4.21	4.44	10.41	1.68	2.00	1.19

1. HCl is hydrogen cloride; CH_3OH is methanol; C_6H_{14} is hexane; CH_3CHO is acetaldehyde; C_3H_4O is acrolein; C_6H_6 is benzene; CH_2O is formaldehyde; Mn is manganese; C_8H_8 is styrene; and $C_6H_5CH_3$ is toluene.

3.7. Review of other Key Regulatory Provisions for Applicability to Project

Following is a summary of the applicability of key regulations to the Suwannee Mill project.

3.7.1. Chapter 62-4, F.A.C. www.dep.state.fl.us/air/rules/fac/62-4.pdf

Rule 62-4.070(1), F.A.C., Standards for Issuing or Denying Permits; Issuance; Denial.

This rule applies to all permitting decisions:

- A permit shall be issued to the applicant upon such conditions as the Department may direct, only if the applicant affirmatively provides the Department with reasonable assurance based on plans, test results, installation of pollution control equipment, or other information, that the construction, expansion, modification, operation, or activity of the installation will not discharge, emit, or cause pollution in contravention of Department standards or rules.

3.7.2. Chapter 62-204, F.A.C. www.dep.state.fl.us/air/rules/fac/62-204.pdf

Rule 62-204.220(1), F.A.C., Ambient Air Quality Protection.

This rule applies to all air permitting decisions.

- The Department shall not issue an air permit authorizing a person to build, erect, construct, or implant any new emissions unit; operate, modify, or rebuild any existing emissions unit; or by any other

means release or take action which would result in the release of an air pollutant into the atmosphere which would cause or contribute to a violation of an ambient air quality standard established under Rule 62-204.240, F.A.C.

Rule 62-204.240, F.A.C., Ambient Air Quality Standards.

This rule applies to all air permitting decisions.

- Refer to list of pollutants and ambient air quality standards provided therein and discussed in the Ambient Air Quality Section of this evaluation.

Rule 62-204.800(8), F.A.C., 40 CFR 60, NSPS.

The following provisions incorporated into Rule 62-204.800(8), F.A.C. adopted from 40 CFR 60 and incorporated into this rule apply to this project:

- 40 CFR 60, Subpart A – General Provisions;
- 40 CFR 60, Subpart Db – Industrial, Commercial, Institutional Steam Generating Units;
- 40 CFR 60, Subpart Dc – Small Steam Generating Units; and,
- 40 CFR 60, Subpart IIII – Stationary Compression Ignition Internal Combustion Engines (ICE).

Rule 62-204.800(11), F.A.C., 40 CFR 63, NESHAP.

The following provisions incorporated into Rule 62-204.800(11), F.A.C. adopted from 40 CFR 63 and incorporated into this rule apply to this project:

- 40 CFR 63, Subpart A – General Provisions;
- 40 CFR 63, Subpart DDDD – National Emission Standards for Hazardous Air Pollutants: Plywood and Composite Wood Products;
- 40 CFR 63, Subpart DDDDD – Industrial-Commercial-Institutional Steam Generating Units; and,
- 40 CFR 63, Subpart ZZZZ – Stationary Reciprocating Internal Combustion Engines (RICE).

NESHAP 40 CFR 63, Subpart DDDDD was promulgated on March 21, 2011. On December 23, 2011 EPA published notice of a full consideration of NESHAP Subpart DDDDD that is expected to be finalized by Summer 2012 thus replacing the previous version. The key limits from each version applicable to the biomass boilers are given in Table 6 below.

Table 6 - NESHAP Subpart DDDDD – Primary Emission Standards for Biomass Fueled Dutch Oven Boilers. [1]

Version	Basis	PM limit	HCl Limit	Mercury	CO	dioxin/furan [2]
03/21/2011	Steam output	0.0011 [3]	0.0021	3.4×10^{-6}	0.45	1.8×10^{-10} TEQ
	Heat input	0.0011 [3]	0.0022	3.5×10^{-6}	470 ppm [4]	0.2 ng/dscm [5]
12/23/2011 (Proposed)	Steam output	0.05 (0.51 lb/MWh) [6] 5.5×10^{-5} (5.8×10^{-4} lb/MWh) [6]	0.025	9.4×10^{-7}	0.89 8.9 lb/MWh	N/A [8]
	Heat input	0.36 4.1×10^{-05} (metals)	0.022	8.6×10^{-7}	810 ppm [9] 440 ppm [10]	N/A [8]

1. Units are lb/MMBtu except as indicated.
2. TEQ means toxic equivalents.
3. 3-run average for units less than 250 MMBtu/hour
4. ppm means parts per million by volume, dry basis at 3% oxygen.
5. ng/dscm means nanograms per dry standard cubic meter at 7% oxygen.

6. MWh means megawatt-hours.
7. Total select metals.
8. N/A means not applicable (no dioxin/furan limit). Addressed by work practice standards involving annual boiler tune-up.
9. 3-run average.
10. 10 day rolling average by CEMS.

3.7.3. Chapter 62-210, F.A.C. www.dep.state.fl.us/air/rules/fac/62-210.pdf

62-210.200, F.A.C., Definitions.

- The project is a Title V or "Major Source" of air pollution because the PTE of at least one regulated pollutant will exceed 100 tons/year.
- The project is a major source of HAP because it will emit or have PTE of 10 tons/year or more of any one HAP or 25 tons/year or more of any combination of HAP.
- The project is classified as a "Major Stationary Source" (PSD-source) because it emits 250 tons/year or more of a PSD pollutant and is a major source of HAP.

Rule 62-210.300, F.A.C., Permits Required.

- Unless exempted, the owner or operator of any facility or emissions unit which emits or can reasonably be expected to emit any air pollutant shall obtain appropriate authorization (i.e. a permit) from the Department prior to undertaking any activity at the facility or emissions unit for which such authorization is required.

Rule 62-210.350, F.A.C. Public Notice and Comment.

- A notice of proposed agency action on permit application, where the proposed agency action is to issue the permit, shall be published by any applicant.
- The rule details additional public notice requirements for emissions units subject to PSD. Examples include: the location and nature of the project; whether BACT has been determined; PSD increment consumption; and notification to the public of the opportunity to submit comments or request a public hearing (meeting).

Rule 62-210.700, F.A.C., Excess Emissions.

This rule applies to all air permitting decisions. Only the key provisions potentially affecting this project are listed.

- Excess emissions resulting from startup, shutdown or malfunction of any emissions unit shall be permitted providing (1) best operational practices to minimize emissions are adhered to and (2) the duration of excess emissions shall be minimized but in no case exceed two hours in any 24 hour period unless specifically authorized by the Department for longer duration.
- Excess emissions which are caused entirely or in part by poor maintenance, poor operation, or any other equipment or process failure which may reasonably be prevented during startup, shutdown, or malfunction shall be prohibited.
- Considering operational variations in types of industrial equipment operations affected by this rule, the Department may adjust maximum and minimum factors to provide reasonable and practical regulatory controls consistent with the public interest.

3.7.4. Chapter 62-212, F.A.C. www.dep.state.fl.us/air/rules/fac/62-212.pdf

Rule 62-212.300, F.A.C., General Preconstruction Review Requirements.

- This rule generally applies to the construction or modification of air pollutant emitting facilities in those parts of the state in which the state ambient air quality standards are being met.

Rule 62-212.400, F.A.C., PSD.

- The rule applies because the project is a major stationary (PSD) source.

3.7.5. Chapter 62-213, F.A.C. www.dep.state.fl.us/air/rules/fac/62-213.pdf

- Because the facility is a Title V source, the applicant will be required to apply for and obtain a Title V operation permit in the future.

3.7.6. Chapter 62-214, F.A.C. www.dep.state.fl.us/air/rules/fac/62-214.pdf

- This project is not subject to the Acid Rain Program (ARP)

3.7.7. Chapter 62-296, F.A.C. www.dep.state.fl.us/air/rules/fac/62-296.pdf

Rule 62-296.320, F.A.C., General Pollutant Emission Limitation Standards.

- This rule prohibits the discharge of air pollutants which cause or contribute to an objectionable odor;
- This rule specifies a visible emissions standard of 20 percent (%) opacity; and
- The rule prohibits emissions of unconfined PM provisions without taking reasonable precautions to prevent such emissions.

Rules 62-296.401, F.A.C., Incinerators

- The facility will combust primarily wood chips, bark, saw dust, wood shavings and other clean woody biomass, which is clearly fuel and not a waste in this industry. No of the fuel material could be construed to be waste. The Department's definition of "incinerator" at Rule 62-210.200(160), F.A.C. is "a combustion apparatus designed for the ignition and burning of solid, semi-solid, liquid or gaseous combustible wastes". The biomass boilers are not specifically designed to burn wastes. The Department concludes that neither he term the term "incinerator" nor the incinerator rule applies to this project. Furthermore, this rule contains less stringent requirements than the applicable NSPS, NESHAP.

Rule 62-296.416, F.A.C., Waste-to-Energy (WTE) Facilities

- This rule does not apply because per Rule 62-210.200(327), F.A.C., the term "WTE facility" does not include facilities that primarily burn fuels other than solid waste, even if the facility also burns some solid waste as a fuel supplement. The term also does not include facilities that burn vegetative, agricultural, or silvicultural wastes, bagasse, clean dry wood, methane or other landfill gas, wood fuel derived from construction or demolition debris, or waste tires, alone or in combination with fossil fuel. The facility will not charge 40 tons per day or more solid waste.

Rule 62-296.405, F.A.C., Fossil Fuel Steam Generators with More than 250 MMBtu/hour Heat Input

- This rule applies only to the extent that fossil fuel is burned in a boiler. The fossil fuel heat input capability of the natural gas boilers will be less than 250 MMBtu/hour. This provision requires compliance with applicable NSPS requirements for visible emissions, PM, NO_X and SO_2 (e.g., NSPS Subpart Db requirements).

Rule 62-296.410, F.A.C., Carbonaceous Fuel Burning Equipment.

- Bark, wood chips, saw dust, wood shaving and other clean woody biomass are carbonaceous fuels when directly combusted and this rule requires that the carbonaceous component of fuel combustion comply with a PM standard of 0.2 lb/mmBtu. Visible emissions are limited to 30% opacity except that 40% opacity is permissible for not more than 2 minutes in any hour.

4. BACT REVIEW

4.1. Definition of BACT

Based on the discussion in subsection 3.3 above, BACT determinations are required for NO_X, CO, VOC and $PM/PM_{10}/PM_{2.5}$. These determinations are provided in the following sections and are organized and presented by EU.

Rule 62-210.200, F.A.C. defines "BACT" as:

An emission limitation, including a visible emissions standard, based on the maximum degree of reduction of each pollutant emitted which the Department, on a case by case basis, taking into account:

1. *Energy, environmental and economic impacts, and other costs;*
2. *All scientific, engineering, and technical material and other information available to the Department; and*
3. *The emission limiting standards or BACT determinations of Florida and any other state;*

determines is achievable through application of production processes and available methods, systems and techniques (including fuel cleaning or treatment or innovative fuel combustion techniques) for control of each such pollutant.

If the Department determines that technological or economic limitations on the application of measurement methodology to a particular part of an emissions unit or facility would make the imposition of an emission standard infeasible, a design, equipment, work practice, operational standard or combination thereof, may be prescribed instead to satisfy the requirement for the application of BACT. Such standard shall, to the degree possible, set forth the emissions reductions achievable by implementation of such design, equipment, work practice or operation. Each BACT determination shall include applicable test methods or shall provide for determining compliance with the standard(s) by means which achieve equivalent results. In no event shall application of best available control technology result in emissions of any pollutant which would exceed the emissions allowed by any applicable standard under 40 CFR Parts 60, 61, and 63.

4.2. BACT Review for Biomass Fueled Dutch Oven Boilers (EU 001 and 002)

4.2.1. Dutch Oven Boiler Principles.

The applicant proposes to install a two biomass fueled Dutch oven boilers. A diagram of a typical Dutch oven boiler is given in Figure 15 below.

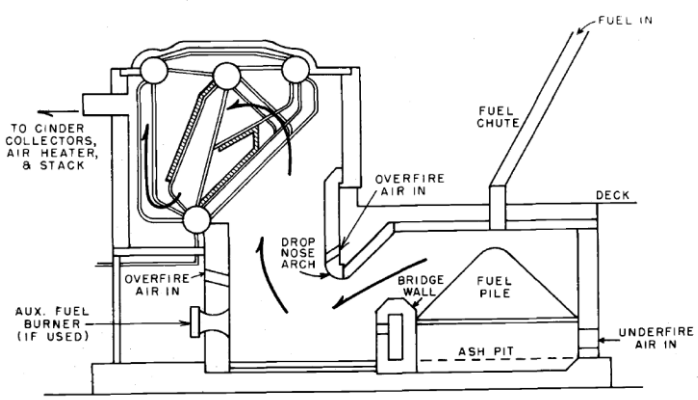

Figure 15 – Diagram of Dutch Oven Boiler

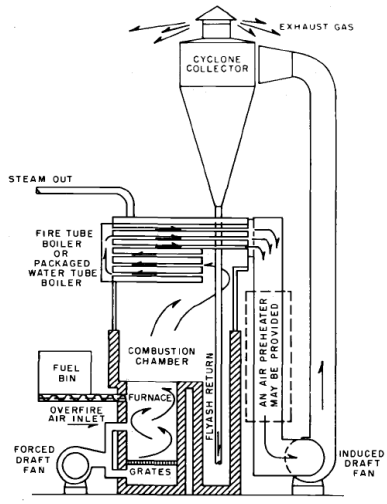

Figure 16 – Diagram of Fuel Cell Boiler

The Dutch oven design is primarily a large, rectangular box, lined on the sides and top with firebrick (refractory)[1]. Heat is stored in the refractory and radiated to the conical fuel pile in the center of the primary combustion chamber. This aids in driving moisture from the fuel and evaporating the organic materials. The refractory may be water cooled to minimize the damage to the chamber from high temperatures. The fuel pile rests on a grate. Under fire air is fed through the grates.

Overfire air (OFA) is fed in around the sides of the fuel pile. By design, incomplete combustion is intended to occur in the primary chamber. Combustion products pass between bridge wall and drop nose arch into the secondary chamber, where combustion is completed before gases enter the heat exchange section. This boiler design has a large mass of refractory, which helps to maintain uniform temperatures in the primary chamber. This aids in stabilizing combustion rates, but results in slow response to fluctuating demands for steam. The system works well, if it is not fired at high combustion rates and if the steam load is fairly constant[2].

The underfire airflow rate is dependent upon height and density of the fuel pile on the grates. When the fuel pile is wet and deep, the underfire airflow is low. Thus, the fire may be deficient in oxygen. As the fuel dries and the pile burns down, the flow rate increases as the pressure drop through the fuel pile decreases. This brings about an excess of air in the primary chamber. For fluctuating steam loads, the result is swings from insufficient air to excess air. This feature, coupled with slow response, high cost of construction, and high costs of refractory maintenance, resulted in phasing *out* Dutch oven designs in most applications. They are still used to some extent in the wood products industry where their ability to cope with a variety of high moisture fuels is an advantage that partially offsets their poorer performance with regard to CO, NO_X and VOC emissions[3].

A variation of the Dutch oven design is the fuel cell. Fuel cells usually incorporate a primary and a secondary combustion chamber (see Figure 16). The primary combustion chamber is a vertical, refractory lined cylinder with a grate at the bottom. Fuel is fed into the cell and drops to the grate or is fed from an undergrate stoker. Air is fed through the grate, and the combustion is partially completed in the cell. Heat is radiated to the fuel pile from the hot refractory. Combustion is completed in the secondary combustion chamber.

The Dutch oven boilers proposed for the Suwannee Mill differ from the one shown in Figure 15 by having a step grate system in the refractory lined primary chamber. In this system, the biomass is moved by a hydraulic ram down the grates as the biomass goes through the processes of drying, heating and pyrolysis to form hydrocarbon and CO gases. These gases are then combusted in a secondary chamber where the resulting heat is used to generate hot water for the lumber drying kilns via a heat exchanger. Otherwise the boilers are similar in concept and operation to the one shown in Figure 15.

4.2.2. NO_X Emissions

4.2.2.1. NO_X Formation and Primary Control Technologies.

NO_X formation in the boiler may occur by three different mechanisms: fuel NO_X is formed from nitrogen compounds contained in fuel (fuel nitrogen); thermal NO_X is formed from molecular or atomic nitrogen (N_2) and oxygen (O_2) present in combustion air; and prompt NO_X is formed in the proximity of the flame front as intermediate combustion products.

---

1 Appalachian Hardwood Center, Overview of Wood-Fired Boiler Use in West Virginia, Fact Sheet 16, 1998.

2 Junge, David C., PhD, Boilers Fired by Wood and Bark Residues, Oregon State University, 1975.

3 *Environmental Aspects of Wood residue Combustion in Forest Products Industry Boilers*, Bioenergy, Tappi Journal, March 2011.

Add-on NO_X Control. Until recently, add-on controls NO_X were uncommon for biomass boilers. Initial add-on NO_X controls consisted of SNCR whereby NH_3 or urea is injected at a point in the process characterized by a suitable temperature window between about 1,500 and 1,900 °F depending on residence time, turbulence, oxygen content, and a number of other factors specific to the given gas stream. The reaction products are nitrogen (N_2) and water vapor (H_2O). SNCR destroys NO_X by a multi step process which is simplified in the equations below.

Equation 10. NH_3 reacts with available hydroxyl radicals (OH*) to form amine radicals (NH_2*) and water per the following theoretical equation:

$$NH_3 + OH^* \rightarrow NH_2^* + H_2O \qquad \text{Eq. 10}$$

Equation 11. Amine radicals combine with nitrogen oxide (NO) to form nitrogen and water as follows:

$$NH_2^* + NO \rightarrow N_2 + H_2O \qquad \text{Eq. 11}$$

Equation 12. The two steps are typically expressed as a single "global reaction".

$$4NO + 4NH_3 + O_2 \rightarrow 4N_2 + 6H_2O \qquad \text{Eq. 12}$$

Similar simplified reactions describe the destruction of nitrogen dioxide (NO_2), which is present in lesser concentrations than NO. One drawback with SNCR is that some of the NH_3 can be converted to NO_X and excessive NH_3 injection is occasionally required to effect good reduction. Excess NH_3 (called slip) can combine with chloride and sulfate species in the exhaust and cause visible emissions. Additionally good CO control is necessary when employing SNCR due to interference with the reaction as described.

Equation 13. CO competes with NH_3 for available OH radicals needed to effect Eq. 10.

$$CO + OH^* \rightarrow CO_2 + H^* \qquad \text{Eq. 13}$$

In the case of selective catalytic reduction (SCR) technology, the NH_3 or urea is injected in the presence of catalyst and at a lower temperature than encountered in the boiler. The reactions are more complete and efficient and NH_3 slip is minimized.

4.2.2.2. *Applicant's BACT Proposal for NO_X.*

Refer to Table 7. The applicant's BACT proposal is 0.14 lb NO_X/MMBtu based on selection of a Dutch oven boiler and incorporation of GCP and SNCR with compliance shown by an annual stack tests per EPA Method 7, 7A or 7E.

The applicant conducted a BACT analysis for NO_X emissions from the biomass boilers based information in the RACT/BACT/LAER Clearinghouse (RBLC) as well as cost-effectiveness calculations based on vendor quotes. Although the applicant included numerous biomass boilers, these were often for much larger higher pressure steam boilers and in power plant service. The following smaller subset is for boilers smaller than 250 MMBtu/hr that are at least comparable to the small hot water production boilers planed by Klausner.

The applicant rejected SCR as BACT for the small biomass boilers. According to the applicant, "*hot end, high dust SCR systems have been permitted and installed on boilers firing biomass or combined fuels; however, they have been primarily used on boilers firing natural gas, fuel oil, and coal. The primary issue associated with a hot end SCR involves the presence of other alkali metals and trace elements in the particulate matter of the flue gas that can chemically damage the catalyst, neutralizing its ability to reduce NO_X. This chemical damage not only cuts the lifespan of the catalyst, but also increases the amount of ammonia slip. These alkali metals and trace elements include arsenic, sodium, potassium, and zinc. Sodium and potassium, both of which are present in fairly high concentrations in wood, are of particular concern for catalyst reactivity.*"

Table 7 - Emissions in lb/MMBtu for Similarly Sized Biomass Boilers.

Project Location	CO	VOC	NO_X	$PM/PM_{10}/PM_{2.5}$ [a]
Suwannee Mill, Florida process heat Dutch oven - bark, wood chips, shavings, sawdust 120 MMBtu/hour (2012)	**0.40** stack test GCP	**0.017** stack test GCP	**0.14** stack test GCP/SNCR	**0.015 (f)** stack test multiclone/ESP
Vercipia Cellulosic Ethanol, FL BFB - stillage, wood, gas, ULSD fuel oil ~198 MMBtu each (2010)	0.10 30-day GCP	0.005 stack test GCP	0.075 30-day SNCR	0.01 (f) Stack test fabric filter
Hibbing Public Utilities, MN grate stoker boiler – wood 230 MMBtu/hour (2005)	0.30 4-hour GCP	N/A	0.15 30-day SNCR	0.025 (f) stack test ESP
NSPS Subpart Db Propane, wood, ULSD fuel oil ≤250 MMBtu/hour	No standard	No standard	Fuel records [f]	0.030 (f) or 20% opacity [g]
40 CFR 63, Subpart DDDDD	See Table 6 above			

a. In certain cases, the enforceable limits are in terms of lb/hr or tons/year and the lb/mmBtu denoted by "eq" are for comparison purposes only.
b. Initial and final limits.
c. Filterable portion only of $PM/PM_{10}/PM_{2.5}$
d. No limit
e. Limit based on PM_{10}
f. NO_X limit applies only to units firing coal, oil, or natural gas or combination thereof.
g. 20% opacity except for one 6 minute period per hour of 27% opacity.

The applicant evaluated the environmental, energy, and economic impacts of using a SCR. Environmental impacts for a hot end SCR include catalyst poisoning as described above requiring frequent catalyst replacements and higher ammonia usage. Energy impacts for a tail end SCR, include combustion of additional fuel to reheat the flue gas to achieve sufficient temperature for NH_3 to react with NO_X in the presence of catalyst.

The applicant evaluated the economic impacts of a regenerative SCR system consisting of exhaust gas reheat (following the PM control device) coupled SCR catalyst and oxidation catalyst (ox-cat). The applicant estimated the annualized costs for a regenerative SCR system at $8,091 per ton of pollutant removed (including NO_X, CO and VOC) removed. According to the applicant, the costs of NO_X control by regenerative SCR (if not considering simultaneous CO and VOC control) is $25,240/ton NO_X removed.

The applicant also indicates that besides significant additional fuel consumption and lower efficiency, the annualized cost for the regenerative SCR is high compared with ranges of acceptable cost effectiveness for BACT. The applicant also considers the incremental costs of $32,236 per additional ton of NO_X removed (relative to a SNCR system) to be outside the cost effectiveness of BACT for this application. The applicant concluded that a regenerative SCR system is not BACT based on the environmental, energy, and economic analyses.

The applicant determined that SNCR is technically feasible and cost-effective and without significant environmental or energy impacts. Klausner is proposing to utilize SNCR to meet BACT emission standard of 0.14 lb NO_X/MMBtu based on initial and annual stack tests.

4.2.2.3. *Department's BACT Determination for NO_X*

The Department does not concur with the conclusion of catalyst lifetime problems when using a hot end, high dust SCR system on biomass boilers (in view of numerous successful installations of "dirty-side SCR" at coal-fueled power plants).

The Department also believes the cost calculations submitted by the applicant with regard to SCR and regenerative SCR systems are greater than would be achieved in practice. However, the small size of the Suwannee Mill biomass hot water boilers and their relatively low NO_X emissions of 147 tons/year with SNCR suggests that further control by SCR is not cost-effective. Even at half the cost estimated by the applicant, SCR would not be cost effective for such a small biomass-fueled hot water boiler. SNCR for this kind of small hot water boiler affords cost effective NO_X removal for less than $1,000/ton.

The Department notes that a different conclusion would be reached for larger biomass-fueled boilers, higher pressure/higher temperature steam boilers or power production boilers. For example, SCR has been specified by the Department for several recent permitting decisions including the Palm beach Renewable Energy Center (waste-to-energy) expansion, the Gainesville Renewable Energy Center (woody biomass to energy) project, several gas-fueled power plants and various other projects.

The Department accepts the applicant's BACT proposal for this project of 0.14 lb NO_X/MMBtu on the basis of incorporating GCP and SNCR in a Dutch oven boiler. Compliance will be demonstrated by initial and annual stack tests.

4.2.3. <u>SO_2 and SAM Emissions</u>

SO_2 is primarily formed from sulfur compounds contained in biomass. SAM is formed by further oxidation of SO_2 to sulfur trioxide (SO_3) prior to exiting the process. SO_3 readily combines with water vapor (H_2O) available in flue gas to form SAM. According to the application, the biomass boilers are expected to emit approximately 26.3 tons/year of SO_2 and 0.97 tons/year of SAM.

According to Klausner, the biomass used as fuel at the Suwannee Mill will be typically low in sulfur content. Values of sulfur were approximately < 0.01% by weight on a dry basis by an ultimate analysis for all the biomass fuels (bark, wood chips, sawdust and wood shavings) proposed for use at the Suwannee Mill. Test results were provided by Hazen Research Inc.

4.2.3.1. *Applicant's non-BACT Proposal for SO_2*

The applicant's BACT proposal is 0.025 lb SO_2/MMBtu based on the low sulfur content of the biomass fuels with no add on controls and with compliance shown by an annual EPA Method 6C stack test. The applicant did not propose an emission limit for SAM, with estimated SAM emission of less than 1.0 tons/year.

4.2.3.2. *Department's non-BACT Determination for SO_2*

To avoid PSD preconstruction review for SO_2, the Department shall require that the annual average sulfur content of all biomass fuels shall be less than an equivalent SO_2 emission rate of 0.036 lb/MMBtu of heat input. Compliance will be by quarterly monitoring of the biomass fuel sulfur content in accordance with §60.49b(r) of NSPS Subpart Db.

4.2.3.3. *Department's non-BACT determination for SAM*

The Department will not set a SAM emission limit due to the very low estimated emission rate of 0.97 tons/year which is well below the 7 tons/year PSD SER threshold. For the same reason, the Department will not require an initial stack test to verify the emission rate.

4.2.4. CO and VOC Emissions

4.2.4.1. Discussion

CO and VOC (including organic HAP) are products of incomplete combustion. Combustion in the refractory line primary chamber of a Dutch oven boiler can occur in substoichiometric conditions. Also, there often exist localized substoichiometric pockets. Consequently, excessive CO can be formed in this chamber. A great deal VOC can be evolved as well including hydrocarbon radicals and other species. Excess air in the primary chamber and/or sufficient OFA in the secondary chamber of the Dutch oven boiler in conjunction with temperature and turbulence is necessary to help in the burnout of CO, fine char and VOC otherwise excess emission of these pollutants can result.

As indicated above, sufficient OFA, temperature and turbulence is necessary to complete the burnout of CO, fine char and VOC in the secondary chamber. Clearly throttling NO_X formation by staging combustion using the OFA ports affects CO and VOC formation. Basically, the manner by which the boiler is operated (e.g. favoring NO_X over CO/VOC control) is part of an overall source emission strategy that considers the emissions limits and costs of add-on controls.

This fact can be appreciated in Figure 19 below from a Babcock and Wilcox (B & W) publication that demonstrates the modeled relative effects upon CO when switching to a low NO_X control strategy. Under the low NO_X strategy (newly designed air system including higher OFA ports) moderate levels of CO (and presumably VOC) persist at greater heights within the boiler compared with the previous combustion strategy.

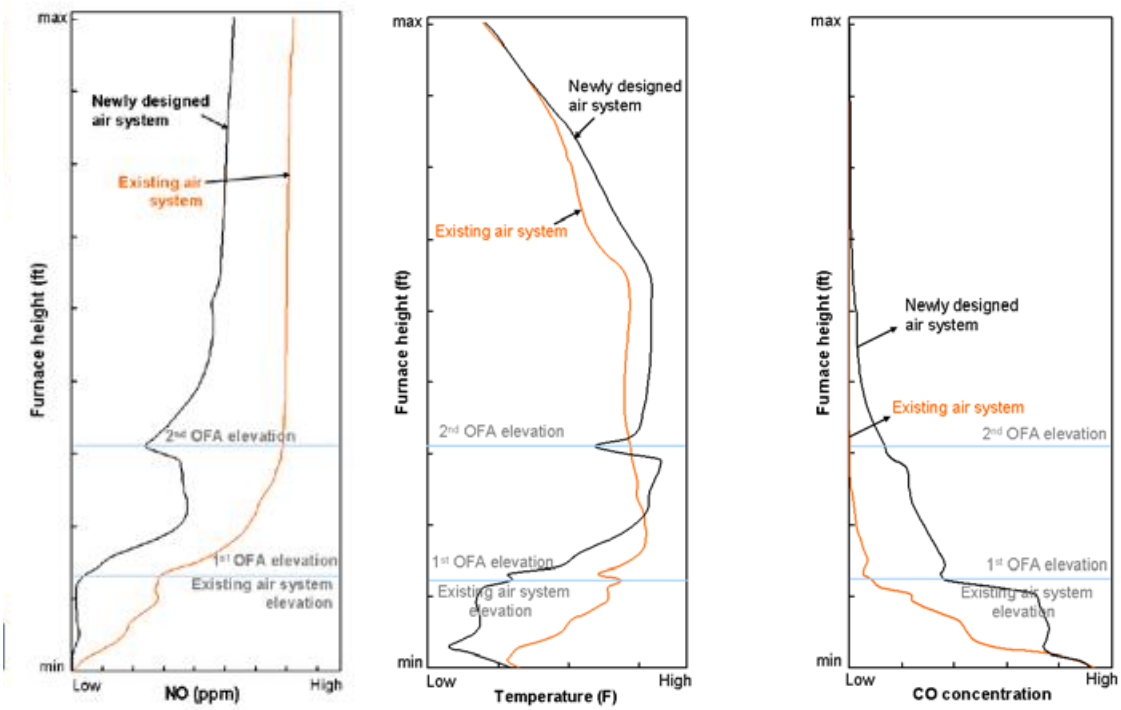

Figure 19 - Modeled NO_X, Temperature and CO a BFB Boiler after Switching to Low NO_X strategy

According to the article, *"in favor of achieving low NO_X emissions, higher CO values were accepted in the Precision Jet air system. However, these CO emissions were well within the acceptable range to meet state and federal requirements"*.[4]

[4] Dessam et al, B&W. Use of Numerical Modeling for Designing a Biomass-fired BFB Boiler Air System for Low NO_X Emissions. 2009 Power-Gen International Conference. Las Vegas December 2009.

The GCP incorporated within the Dutch oven boiler design consists of: the heat of the refractory material in the primary chamber and sufficient time for pyrolysis to take place and convert the biomass fuel to hydrocarbon and CO gases which pass into the secondary chamber of the boiler. In the secondary chamber, sufficient turbulence, temperature and residence time above the OFA ports must be present to the extent allowed by a low NO_X strategy.

If GCP are geared primarily to control NO_X then there is less freedom when also trying to control CO and VOC by the same GCP. However, if GCP is geared to reducing CO and VOC, post combustion control such as a SNCR system can be used to control NO_X emissions. In the case of the proposed biomass Dutch oven boilers at the Suwannee Mill, post combustion SNCR systems are proposed to control NO_X emissions, allowing GCP, if desired by the applicant, to be tailored to reducing CO and VOC emissions from the boilers.

If GCP are not sufficient to achieve the necessary low CO and VOC emissions, an oxidation catalyst (ox-cat) is an option. As in the case of SCR catalyst, the preferred location of an ox-cat system is after the PM control device (i.e. the ESP proposed by Klausner).

4.2.4.2. *Applicant's BACT Proposal for CO and VOC*

Refer to Table 7 in Subsection 3.8.2.2 above. The applicant's BACT proposal is 0.40 lb CO/MMBtu and 0.017 lb VOC/MMBtu by GCP within a Dutch oven boiler with compliance by annual stack tests using EPA Methods10B and 25/25A, respectively. The applicant proposes an OFA combustion design and controls for the boilers to minimize CO and VOC emissions.

The applicant conducted a top/down BACT analysis for CO and VOC from the biomass boilers based information in the RACT/BACT/LAER Clearinghouse (RBLC) as well as cost-effectiveness calculations based on vendor quotes.

According to additional information submitted by the applicant with regard to their proposed CO BACT determination for the Dutch oven biomass boilers:

"T*he basis for defining the CO BACT for the proposed Dutch oven biomass boilers is consistent with the case-by-case "top-down" approach. In the initial step of this approach, Klausner defined the type of source proposed for the Suwannee Mill as a Dutch oven hot water heater. The DEP should review this determination in order to discern which design elements are inherent for the applicant's purpose and which design elements may be changed to achieve pollutant emissions reductions without disrupting the applicant's basic business purpose for the proposed Suwannee Mill, while keeping in mind that BACT should not be applied to regulate the applicant's purpose or objective for the facility.*[5] *The following attributes of the Dutch oven furnaces are inherent to the proposed purpose of the Suwannee Mill:*

- *Use only biomass as fuel including any variation of bark, sawdust, wood chips, or other type of wood material;*
- *Routinely combust fuels with a moisture content of up to approximately 60%;*
- *Produce hot water as a heat transfer medium for the tightly controlled kiln drying process which operates at low temperatures compared to other lumber drying kilns in the U.S.;*
- *Use of small combustion units with approximately 120 MMBtu/hour heat input capacity;*
- *Designed to be capable of sustained operation at consistent load; and*
- *Use of reliable, proven technology for sawmills.*

Dutch oven furnaces offer the unique capability to meet each of these criteria, which is why the units are commonly used in sawmill applications. Due to the three-stage process of drying, pyrolysis, and final combustion, as well as the large refractory around the furnace, dutch oven furnaces are able to sustain

[5] In re: Desert Rock Energy Company, LLC, PSD Appeal No. 08-03 et al., Slip. Op. at 64 (EAB 11/24/09).

consistent combustion even when the fuel feed fluctuates with high moisture content or varying biomass type (e.g., bark, sawdust, or chips). Although the large refractory inhibits the capability of the unit to react quickly to load or demand changes, this inflexibility is not important at a sawmill where the units will be operated at a consistent load continuously for balanced drying operations. Also, Dutch ovens are smaller furnaces particularly suited to producing hot water or steam, and fit the size requirements for the proposed application."

The Applicant further states in the submitted additional information:

"In addition to this case-by-case assessment of the inherent attributes of the proposed project that narrow similar sources for BACT to Dutch oven furnaces, it is important to note precedent from EPA in distinguishing between source types on the basis of combustor type. Most recently, EPA defined Dutch oven furnaces (combusting biomass) as a separate subcategory in the reconsidered Boiler MACT (NESHAP Subpart DDDDD), and specifically as a separate source category for CO emissions standards.[6]

Other biomass fired boiler subcategories in addition to Dutch ovens include stokers/sloped grate, fluidized bed units, suspension burners, fuel cell units, and hybrid suspension grate units. The different biomass boilers subcategories include different CO (organic HAP surrogate) emissions limits as well as other HAP and HAP surrogate pollutant limits based on the maximum degree of reduction achieved in practice by the best similar source.[7] *Table 1 of NESHAP Subpart DDDDD includes MACT emissions limits for new sources, and Table 2 of NESHAP Subpart DDDDD includes MACT emissions limits for existing sources. Specifically, the CO emission limit for a new Dutch oven furnace is 810 parts per million by volume (ppmv) on a dry basis corrected to 3% O_2, 3-run average. For comparison, the CO emission limit for a new fluidized bed boiler is 230 ppmv on a dry basis corrected to 3% O_2, 3-run average."*

According to the article, *"in favor of achieving low NO_X emissions, higher CO values were accepted in the Precision Jet air system. However, these CO emissions were well within the acceptable range to meet state and federal requirements"*.[8]

The GCP incorporated within the Dutch oven boiler design consists of: the heat of the refractory material in the primary chamber and sufficient time for pyrolysis to take place and convert the biomass fuel to hydrocarbon and CO gases which pass into the secondary chamber of the boiler. In the secondary chamber, sufficient turbulence, temperature and residence time above the OFA ports must be present to the extent allowed by a low NO_X strategy.

If GCP are geared primarily to control NO_X then there is less freedom when also trying to control CO and VOC by the same GCP. However, if GCP is geared to reducing CO and VOC, post combustion control such as a SNCR system can be used to control NO_X emissions. In the case of the proposed biomass Dutch oven boilers at the Suwannee Mill, post combustion SNCR systems are proposed to control NO_X emissions, allowing GCP, if desired by the applicant, to be tailored to reducing CO and VOC emissions from the boilers.

If GCP are not sufficient to achieve the necessary low CO and VOC emissions, an oxidation catalyst (ox-cat) is an option. As in the case of SCR catalyst, the preferred location of an ox-cat system is after the PM control device (i.e. the ESP proposed by Klausner).

Control of CO emissions by installation of ox-cat can improve the emission profile of a Dutch oven boiler. As discussed in the NO_X section, the applicant evaluated using an ox-cat as part of a regenerative

---

6 Federal Register Vol. 76, No. 247, pp. 80598-80672, December 23, 2011.

7 Clean Air Act §112(d)(3).

8 Dessam et al, B&W. Use of Numerical Modeling for Designing a Biomass-fired BFB Boiler Air System for Low NO_X Emissions. 2009 Power-Gen International Conference. Las Vegas December 2009.

SCR system. Considering only the annualized costs for the ox-cat component of the regenerative SCR system, the applicant calculated the cost effectiveness of $10,747/ton of CO removed.

According to the applicant, there are economic, environmental and energy impacts from the regenerative SCR system due to the need for auxiliary fuel to reheat the flue gas stream to a minimum catalytic oxidation requirement of 500°F.

The applicant determined that an ox-cat is not BACT based on the environmental, energy and economic analyses. According to the applicant, the annualized cost for the Regenerative SCR package, which is a conservative estimate for this CO BACT determination, is beyond the range of cost effectiveness.

4.2.4.3. *Department's BACT Determination for CO*

The Department does not agree with the assertion that it is necessary to heat exhaust gas to 500°F so that ox-cat will actually function to reduce CO and VOC. As shown in Figure 20 below, an ox-cat is effective for CO removal at temperatures as low as 300 °F.[9]

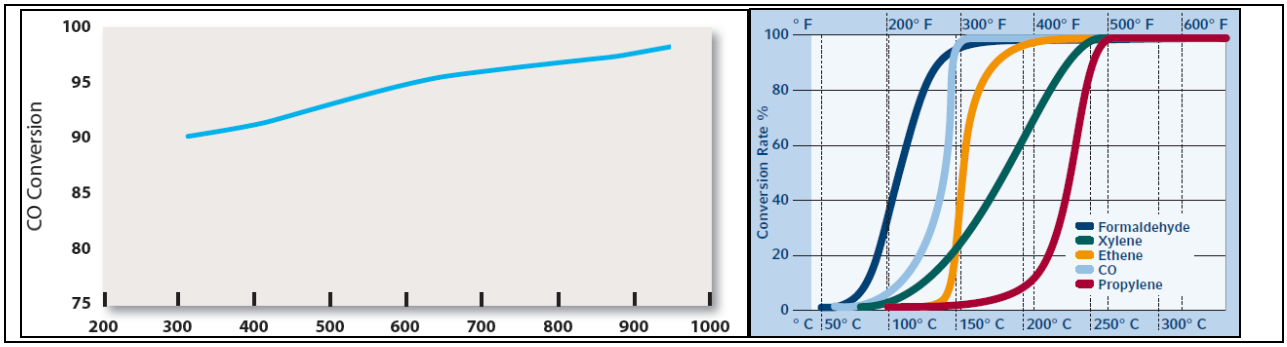

Figure 20 - Ox-cat Performance vs. Temperature (°F) Ox-cat Performance vs. Temperature (°C)

The Department does not with the applicant regarding the cost of CO control by ox-cat within a regenerative SCR system or ox-cat alone on the hot water boilers planed for the Suwannee Mill. However, for the size of the biomass (non-power) hot water boilers planed, the Department agrees that ox-cat systems are not cost-effective for the biomass boilers at the Suwannee Mill.

The Department accepts the applicant's BACT proposal for the biomass Dutch oven boilers of 0.40 lb CO/MMBtu on the basis of incorporating GCP and OFA with compliance demonstrated by an annual stack tests. This value is more stringent than the stack test-based CO MACT emission standard (equivalent to 0.66 lb/MMBtu) contained in NESHAP Subpart DDDDD that was proposed on December 23, 2012 and that will apply to the biomass boilers

The existing CO MACT emission limit contained in NESHAP Subpart DDDDD (promulgated on March 21, 2011), which is under reconsideration, is equivalent to 0.38 lb CO/MMBtu. The biomass Dutch oven boilers at the Suwannee Mill will have to meet this more stringent limit (instead of 0.40 lb/MMBtu) if the reconsidered and proposed rule is not finalized.

4.2.4.4. *Department's BACT Determination for VOC*

Refer to Table 7 in Subsection 4.2.2.2 above. The applicant estimates VOC emission from the biomass boilers to be 17.9 tons/year. Since the Department is not requiring an Ox-cat system on the biomass boilers to control CO emissions and emissions of VOC from the boilers are low, the applicant's proposal of 0.017 lb VOC/MMBtu by GCP with compliance by an initial stack tests is accepted as BACT to the Department. The BACT VOC emission limits is in line with the VOC limits given in Table 7 above for other biomass boilers.

[9] Brochures. Sud-Chemie and Johnson-Matthey.

4.2.5. PM/PM_{10}/$PM_{2.5}$ and Visible Emissions (VE)

4.2.5.1. Discussion

PM/PM_{10}/$PM_{2.5}$ are formed from ash contained in the biomass, products of incomplete combustion and from chemical reactions between products of combustion that form alkali and ammoniated chlorides, sulfates, nitrates and other such species.

The most well known controls include cyclones, ESP, fabric filters (baghouses) and wet scrubbers. Supplementary controls include strategies such as minimization of $PM_{2.5}$ and VE precursors by limiting SO_2, NO_X, NH_3, VOC and chlorides.

The most effective types of direct PM control equipment applied to biomass boilers are fabric filters and ESP. Fabric filters, where technically feasible, are the preferred PM control device because they provide better control for fine PM.

4.2.5.2. Applicant's Proposal for PM/PM_{10}/$PM_{2.5}$ and VE Limits

Refer to Table 7 above. The applicant's BACT proposal is 0.015 lb/MMBtu for filterable (f) PM based on an ESP (following a multiclone) with compliance show by an annual stack tests using EPA Method 5. The applicant also proposed a filterable and condensable (c) PM_{10}/$PM_{2.5}$ BACT limit of 0.032 lb/MMBtu with compliance shown by meeting the filterable PM limit of 0.15 lb/MMBtu.

According to the applicant:

"Baghouses and ESPs have equally effective removal efficiencies and are capable of achieving the same control levels for particulate. Baghouses and ESPs are both commonly used for fluid bed and bubbling bed biomass-fired boilers; however, baghouses are seldom used for stoker boilers and Dutch oven furnaces, in part because of potential long-term fire hazards of burning embers setting the baghouse on fire. Therefore, Klausner proposes to install an ESP, preceded by a multiclone. Since one of the two most effective available control technologies for BACT has been selected, economic and energy analyses are not required."

4.2.5.3. Department's BACT Determination for PM/PM_{10}/$PM_{2.5}$ and VE

The applicant's proposed BACT value of 0.015 lb PM (f)/MMBtu that is equal to the BACT limit for the larger boilers at the Gainesville Renewable Energy Center, Southeast Renewable Fuels, and Highlands Envirofuels projects recently permitted in Florida.

The Department accepts the applicant's BACT proposal for the biomass Dutch oven boilers of 0.015 lb PM (f)/MMBtu on the basis of incorporating multiclones and ESP with compliance demonstrated by initial and annual stack tests. This value is more stringent than the stack test-based PM MACT emission standard of 0.036 lb/MMBtu contained in NESHAP Subpart DDDDD that was proposed on December 23, 2012 and that will apply to the Dutch oven biomass boilers.

In addition, the Department will specify a PM_{10}/$PM_{2.5}$ (f+c) limit of 0.032 lb/MMBtu. Compliance with the PM limit will be demonstrated by initial and annual stack tests. Compliance with the PM_{10}/$PM_{2.5}$ limit will initially be demonstrated by a stack test. Subsequent compliance with the PM_{10}/$PM_{2.5}$ limit will be demonstrated by meeting the PM (f) limit.

The existing PM MACT emission limit contained in NESHAP Subpart DDDDD (promulgated on March 21, 2011), which is under reconsideration, is 0.0011 lb PM/MMBtu. The biomass Dutch oven boilers at the Suwannee Mill will have to meet this more stringent limit (instead of 0.015 lb/MMBtu) if the reconsidered/proposed rule is not finalized.

The PM emission limit in the Final March 21, 2011 NESHAP Subpart DDDDD of 0.0011 lb PM/MMBtu (heat input or steam output) is more than an order of magnitude more stringent than the limit proposed by Klausner.

A BACT VE standard of 10% opacity (6-minute average), except for one 6-minute period per hour of not more than 20% opacity, will also be established and demonstrated by a COMS on each biomass boiler to provide reasonable assurance that the PM limit (BACT or NESHAP) is being met continuously during normal operation. The COMS will also insure efficient injection of the NO_X control reagent to avoid a detached visible plume from ammoniated species or brown tinged plumes from high NO_X emissions. During periods of startup, shutdown and malfunction each biomass boiler will be required to employ good combustion practices and demonstrate that good combustion practices are maintained by monitoring O_2 concentrations and optimizing those concentrations as specified by the boiler manufacturer. As well, boiler operators will be required to be trained in startup and shutdown procedures, including maintenance and cleaning, safety, control device startup, and procedures to minimize emissions.

For reference, the December 23, 2012 proposed NESHAP also has a heat input based limits in pounds of "total selected metals" (tsm)/MMBtu. There are also steam output based limits based in lb/MMBtu, pounds per megawatt hours (lb/MWh), lb tsm/MMBtu and lb tsm/MWH. Klausner can choose to meet any of these limits.

4.2.6. Startup, Shutdown and Malfunction Emissions

During periods of startup, shutdown and malfunction, the work practice standard requirements of the applicable NESHAP will represent BACT to minimize emission during these periods. A condition will be placed in the permit, requiring that a work practice standards plan be submitted to the Compliance Authority for approval 180 days before a biomass boiler becomes operational.

4.2.7. Other HAP Emission Limits for the Dutch Oven Boilers

Refer to Table 5 in subsection 3.5 above for NESHAP Subpart DDDDD emission limits. The biomass boilers must meet the applicable standards for HCl and Hg from whichever NESHAP (Final March 21 or the final form of Proposed December 23) is in force when the boilers become operational. The biomass boilers must also meet the D/F standard of the Final March 21 NESHAP if it is enforce when the boilers become operational. The Proposed December 23 NESHAP would require that the biomass boilers meet work practice standards to control D/F emissions. The work practice standards consists of a tune-up of each boiler annually as specified in § 63.7540.

4.3. BACT Review for Natural Gas Boilers (EU 003 through 006)

4.3.1. Discussion.

Each of the four natural gas boilers is rated at a design heat input rate of 46 MMBtu/hour. Two each of the natural gas boilers will share a common stack with the pair equating to one EU. The hours of operation of the natural gas boilers are not limited (8,760 hours/year). However, the total amount natural gas that can be fired in all the boilers combined in any consecutive 12 month period is limited by the applicant's request to 1,360 million cubic feet. The potential to emitted (PTE) from the four natural gas boilers combined is 5.17 tons/year of $PM/PM_{10}/PM_{2.5}$, 25.0 tons/year of NO_X, 27.0 tons/year of CO, 0.4 tons/year of SO_2, 2.08 tons/year of VOC and 69,519 tons/year of CO_2e.

4.3.2. Applicant's Proposal.

The applicant's proposals for all of the pollutants in lb/MMBtu from the natural gas boilers (and biomass boilers) are included in Table 8 with comparisons to emission limits from the RBLC survey and other standards.

SO_2 is controlled by specification of natural gas as the only allowable fuel. The natural gas available in Florida generally contains less than 2 grains S per 100 standard cubic feet (gr S/100 SCF). This value equates to approximatly0.0056 lb SO_2/MMBtu assuming the heat content of natural gas is 1,020 Btu/SCF.

Table 8 – Emissions in lb/MMBtu – Natural Gas Boilers with Uses or Capacities Similar to Proposed Project

Project Location	CO	NO_X	VOC	$PM/PM_{10}/PM_{2.5}$
Suwannee Mill natural gas, ~46 MMBtu/hour	0.039	0.036	0.003	0.002 (f)[1]
Suwannee Mill Biomass Boilers ~120 MMBtu/hour	0.40	0.14	0.017	0.015 (f)
Champion International Corp. McDavid Lumber Mill, FL natural gas < 100 MMBtu/hour	0.10 (to avoid PSD)	0.10 (to avoid PSD)	No Standard	5% opacity
Recent RBLC Survey 2001 to 2010	0.008 – 0.10	0.035 – 0.129	0.002 – 0.02	0.005 – 0.01[2] 0.0033 – 0.015[3]
FPL West County, FL 99.8 MMBtu/hour, natural gas	0.08	0.05	2 gr S/100 SCF natural gas, 10% opacity	
NSPS Subpart Dc natural gas ≥ 10, < 100 MMBtu/hour	Monthly record keeping of natural gas usage is required. In addition, the facility must submit notification of the date of initial startup per §60.48c(a), as provided by §60.7.			
NESHAP Subpart DDDDD[4] natural gas ≥ 100 MMBtu/hour	A new or existing boiler or process heater with heat input capacity of 10 MMBtu/hour or greater must conduct a tune-up of the boiler annually as specified in § 63.7540. Natural gas fired boilers s will conduct this tune-up as a work practice for all regulated emissions under this subpart.			

1. Filterable portion only.
2. PM emission limits, filterable only.
3. PM_{10} /$PM_{2.5}$ emission limits, filterable only.
4. March 21, 2011(final) and December 23, 2011 (proposed) NESHAP Subparts DDDDD have essentially the same requirements for natural gas fired boilers with regard to work practice standards.

Overall, the applicant proposed as BACT for that natural gas boilers at the Suwannee Mill the emission limits given in Table 8. These emission limits will be met by use of inherently clean natural gas, FGR, LNB and GCP. Compliance will be by annual stack testing. According to the applicant - for NO_X control:

"SNCR has been widely used in modern stoker boilers, where the high alkaline ash loading of the boiler makes high dust loading SCR systems technically infeasible. However, SNCR is not appropriate for use in package natural gas fired boilers, since the short residence time does not allow for adequate reaction time to reduce NO_X emissions. Therefore, SNCR is not a technically feasible control option for these boilers."

"Klausner evaluated the economic, energy and environmental impacts of using an SCR. Energy impacts include 19.2 kW of lost capacity split between direct electrical load and increased pressure drop across the system. Next, Klausner evaluated the economic impacts of a SCR. Based on a vendor quote for total capital costs of a SCR and Oxidation Catalyst package and OAQPS Manual equations, the annualized costs for a SCR – oxidation catalyst were estimated to be $44,819 per ton of total NO_X, CO and VOC

removed.[10] *Environmentally, a SCR would also have an impact with the increased generation and disposal of the spent catalyst as solid waste."*

"Klausner has determined that a SCR system is not BACT based on the environmental, energy, and economic analyses. Beyond the consumption of significant additional fuel and worse heat rate, the annualized cost for the SCR is well beyond the range of cost effectiveness for BACT."

For the same environmental, energy and economic reasons, and the relatively low emissions of $PM/PM_{10}/PM_{2.5}$, VOC and CO, the applicant determined that add on controls for these pollutants were not warranted.

4.3.3. Department's Review.

The Department recognizes that emissions from the natural gas boilers will be low due to their small size (46 MMBtu/hour each) and the fact that they will burn only clean natural gas. The low emissions from the boilers make the addition of add on pollution controls cost prohibitive when compared to the mass of pollutants removed, specifically NO_X and CO. Although there will be no hour restriction on the use of the natural gas boilers, natural gas usage will be limited by the applicant's request to 1,360 million ft^3 cubic feet in all four boilers combined in any consecutive 12 month period further limiting emission from the boilers. This gas limitation equates to approximately a 14% reduction in the combined operating hours of the boilers.

The applicant's proposed use of LNB, FGR and GCP for the natural gas boilers to control the emissions of VOC, CO and NO_X is acceptable to the Department as BACT. The use of clean natural gas to limit $PM/PM_{10}/PM_{2.5}$ and SO_2 emissions is also accepted by the Department as BACT. Compliance with the CO limit of 0.039 lb/MMBtu shall be demonstrated by annual stack testing.

Compliance with the NO_X and VOC limits of 0.036 lb/MMBtu and 0.003 lb/MMBtu, respectively, shall be demonstrated by initial stack tests. The Department will also set an opacity limit of 10% opacity (6 minute blocks) except for on 6 minute block of 20% opacity per hour. Compliance with the opacity limit shall be demonstrated by initial and annual tests.

Compliance with the PM/PM_{10} limit shall be demonstrated by fuel monitoring showing that the sulfur content of the natural gas is 2 grains per hundred standard cubic foot (gr/100 scf) or less. Vendor certification can be used in lieu of fuel monitoring.

4.4. BACT Review for Lumber Drying Kilns (EU 007)

4.4.1. VOC Discussion.

The applicant proposes to install four kiln blocks with a total of 60 drying kilns. Kilns are heated with hot water piped from the Dutch oven boilers and natural gas boilers. Radiant exchangers transfer heat in the kilns and blowers distribute hot air throughout the kiln for the duration of the drying process. During drying, moisture is evaporated from the lumber. As the air becomes saturated condensation occurs and the condensation is collected from the kilns in basins and transferred as required to a holding tank. The condensation is mostly water with VOC and organic HAP entrained in the liquid.

After the lumber product has reached the specified moisture content the kiln is equalized. During equalization, condensation is allowed to entrain back into the lumber product until the entire kiln batch as attained uniform moisture content. After equalization the two roof vents are opened to release excess heat and moisture. It is at this time that the kiln exhaust gases containing VOCs are released to the atmosphere. Finally the kiln doors are opened and lumber is removed and transported via mobile equipment to the planer mill building for further processing or sold as rough dried lumber.

[10] Vendor quote was for package of SCR and oxidation catalyst and cost per ton was estimated using sum of NO_X, CO and VOC, reductions and total cost for capital and operating expenses.

4.4.2. Discussion.

The applicant identified several possible control technologies including VOC control technologies in use at other types of wood products manufacturing facilities. The candidate control options are listed below:

- Proper Design and Operation;
- Condensation;
- Thermal or Catalytic Oxidation;
- Carbon Adsorption;
- Polymer Adsorption;
- Wet Scrubbing; and
- Biofiltration.

The applicant reviewed each technology and concluded that each is infeasible. The write-up is documented in the application.

The applicant searched the current RACT/BACT/LAER Clearinghouse (RBLC) maintained by EPA for lumber mill drying kiln entries over the past 10 years. Several of the entries are contained in Table 9. The Champion International Corp. McDavid Lumber Mill is included because (although beyond 10 years old) it is relatively large and located in Florida.

Table 9 – Emission Limits or Estimates from Lumber Kilns Similar to Proposed Project

Project Location, Capacity	**VOC (lb/1000 bf)** [1]	**$PM/PM_{10}/PM_{2.5}$ (tons/year)**
Suwannee Mill 700 MMbf/year Florida	**3.7 (Proposed)** **3.5 (Department BACT)**	**9.4** **10% Opacity**
Charles Ingram Lumber Company South Carolina (8/15/2001)	3.5 Good Design	20% Opacity
Deltic Timber Corporation – Waldo Arkansas (1/12/2005)	3.5	20% Opacity
Potlatch - Ozan Unit Washington (3/8/2001)	3.5	20% Opacity
Sierra Pacific Industries Skagit County 300 MMbf/year Washington (1/25/2006)	3.6	4
Champion International Corp. McDavid Lumber Mill 225 MMbf/year Florida (09/1999)	3.3 (estimated short term) 2.8 (estimated long term)	4.2 5% Opacity
Georgia-Pacific Corp., El Dorado Sawmill 160 MMbf/year Arkansas (11/7/2002)		1.8
Temple-Inland Diboll 171 MMbf/year Texas (11/01/2004)		4
1. Units are in pounds per thousand board feet (lb/1000 bf)		

According to the applicant, operation of the kilns without add-on VOC controls "is the only feasible approach and is consistent with approved industry practices for other new kiln projects". The applicant proposes to limit emissions to 3.73 pounds of VOC per thousand board feet (lb/1000 bf) by proper design and operation. The applicant proposes compliance to be verified by recording annual production.

4.4.3. Department's Review and Preliminary Determination

Control technology for the emissions of PM from kiln vents is technically and economically infeasible. Aerosol emissions of kiln dryer gas are condensable PM and VOC's. These aerosols leave uncontrolled vents as vapor and condense at normal atmospheric temperature to form liquid particles or mist.

Effective control technologies have not been developed for the condensable portion of kiln emissions. As such, electrostatic precipitator, cyclone and baghouse control technology are not effective. There are no similar facilities within the RBLC database that have effectively implemented control of particulate from a lumber drying kiln.

The use of the condensation recovery system provides some control as a portion of the VOC that are extracted are sequestered. No data of the effectiveness of this type of indirectly-heated drying kiln or condensation recovery system was presented by the applicant. The emissions from the kilns at the Suwannee Mill are considered as BACT and are essentially the current industry standards for lumber drying kilns.

Klausner suggested an emissions factor of 3.73 lb/1000 bf of VOC as BACT based on emissions factors derived from the National Council for Air and Stream Improvement (NCASI)[11]. The suggested emissions factor is a sum of VOC, methanol, and formaldehyde for steam heated kilns. The average emission factors do not include methanol and formaldehyde because they may not be fully detected by EPA Method 25A as carbon. If compliance testing were to be performed it is likely that EPA Method 25A would be the preferred method. As such, the Department's preliminary determination is that the most commonly used RBLC emissions factor of 3.5 lb/1000 bf of VOC is BACT for this project.

Two facilities estimated VOC emissions less than 3.5 lb/1000 bf, they are the Champion International in Florida and the Temple Inland Pineland in Texas. VOC emissions from these two facilities were estimated to be 3.3 lb/1000 bf for the Champion International and 2.49 lb/1000 bf for the Temple Inland Pineland facility. The origins of these two estimates are unknown actual emissions are unconfirmed[12]. As such, they provide an unreliable basis for BACT determination.

In 2004, EPA promulgated NESHAP Subpart DDDD - Plywood and Composite Wood Products. MACT emission standards or control/work practices are given in NESHAP Subpart DDDD. Plywood and composite wood products also include the subcategory of kiln-dried lumber. According to 40 CFR 63.2252, process units not subject to the compliance options or work practice requirements specified in section 63.2240 (including, but not limited to, lumber kilns):

"are not required to comply with the compliance options, work practice requirements, performance testing, monitoring, startup/shutdown/maintenance plans, and recordkeeping or reporting requirements of this subpart, or any other requirements in subpart A of this part, except for the initial notification requirements in section 63.9(b)".

The applicant's proposal and the Department's preliminary BACT determination are consistent with the MACT determination conducted by EPA for the industry. While this is not generally a sufficient criterion to justify a BACT determination, it adds justification to the preliminary determination for this project.

---

[11] National Council for Air and Stream Improvement (NCASI) emission factors in Technical Bulletin No. 845 "A Comparative Study of VOC Emissions from Small-Scale and Full-Scale Lumber Kilns Drying Southern Pine," May 2002.

[12] Telephone and Electronic Communication. Agumadu, Patrick, P.E., Texas Commission on Environmental Quality, Air Permits and Registrations, with Koletzke, Marilyn, Florida DEP. Re: Temple Inland Pineland Kilns Emissions. March 5, 2012.

4.4.4. PM/PM_{10}/$PM_{2.5}$ Emissions and Visible Emissions

An emissions factor of 0.022 lb/1000 bf of total PM as BACT is suggested by Klausner. This emissions factor is also originally derived from the NCASI Technical Bulletin No. 845 for steam heated kilns. It is considered to be BACT as it is less than or equivalent to emissions factors used to calculate the emissions for the similar permitted facilities included in Table 9.

In lieu of measuring PM/PM_{10}/$PM_{2.5}$ emissions the Department will set a visible emissions (VE) standard of 10% opacity. It is within the range of available data (5 to 20%) from drying kilns of four facilities: Charles Ingram in South Carolina; Deltic in Arkansas; Potlatch in Washington; and Champion in Florida as listed in Table 9. For lumber kilns, a 10% opacity limitation is more practicable for discerning differences between dissipating vapor from a lumber kiln and remaining aerosol contributing to visible emissions.

4.5. BACT Review Planer Mill , Sorter Line Trimmers and Dry Shaving Silos (EUs 008 and 009)

4.5.1. Discussion.

The applicant proposes to install two dry shavings silos to contain the dry shavings and sawdust from the planer mill lines and the sorter line trimmers. The major components of the dry shaving silos are two 56,000 ft^3 silos and a baghouse on each silo.

4.5.2. Department's Review.

The Department accepts the baghouse control technology described by the applicant as BACT for the dry shavings silo baghouse. The Department will set a visible emission standard of 5% opacity.

4.6. BACT Review Biomass Boiler Flyash Silo (EU 010)

The applicant proposes to install a biomass boiler flyash silo to collect and store flyash from the biomass boiler ESP and multicyclone. The boiler flyash silo has a baghouse.

4.6.1. Department's Review.

The Department accepts the baghouse control technology described by the applicant as BACT for the fly ash silo baghouse. The Department will set a visible emission standard of 5% opacity.

4.7. BACT Review for Log Storage, Processing and Sawmill (EU 011)

4.7.1. PM/PM_{10}/$PM_{2.5}$ Emissions

PM/PM_{10}/$PM_{2.5}$ represent the only pollutant of concern from EU 011. Refer to the description of EU 001 in Section 2.1 above.

Klausner proposes to utilize reasonable precautions and a BMP plan approved by the Department for controlling fugitive dust emissions from this emission unit. These precautions include the following:

- Processing logs in enclosed structures such as the sawmill and planer buildings; as necessary enclosing outside conveyors (e.g. that the conveyance belt for the biomass is totally enclosed from above thus preventing wind from causing fugitive dust emissions with the bottom of conveyance belt accessible for maintenance and repairs) and material drop points, shredders and screens wherever practical;
- Contouring storage piles to minimize wind erosion; utilizing water sprays on storage piles as needed; paving all main plant access roads;
- Sweeping and watering of paved surfaces as needed to remove dust; and

Utilizing water sprays on ash material from the boiler, as necessary.

4.7.2. Department's Review. The Department accepts the procedures described by the applicant as BACT for the Log Storage, Processing and Sawmill EU, with the addition of wetting the gravel areas, as necessary, during dry conditions. In addition, where practical, dust collectors must be installed at drop and transfer points in the biomass handling systems and the paved areas must be vacuumed swept as needed to prevent fugitive dust emissions. The Department requires baghouses on any storage silos associated with this emissions unit. The Department will set a visible emission standard of 5% opacity.

4.7.3. BACT Review Green Lumber Sorting And Trimming Lines Baghouse.

The applicant proposes to install a baghouse to control dust from the green lumber sorting and trimming lines. After the sawmill, green rough cut lumber is sorted by quality and size then trimmed before being stacked for either drying in the kills or shipped off site as rough cut lumber.

4.7.4. Department's Review.

The Department accepts the baghouse control technology described by the applicant as BACT for green lumber sorting and trimming lines baghouse achieve a dust outlet loading of 0.005 grains/dscf. The Department will set a visible emission standard of 5% opacity.

4.8. BACT Review for Emergency Generators (EU 012)

Five 343 kilowatts (kW) emergency generators are included for this project. The requirements of 40 CFR part 60, subpart IIII - Standards of Performance for Stationary Compression Ignition Internal Combustion Engines (NSPS Subpart IIII) are given at: Link to NSPS Subpart IIII .

The area and major sources requirements of 40 CFR part 63, subpart ZZZZ - National Emissions Standards for Hazardous Air Pollutants for Stationary Reciprocating Internal Combustion Engines (NESHAP Subpart ZZZZ) are given at: Link to NESHAP ZZZZ . A stationary reciprocating internal combustion engine subject to regulation under 40 CFR part 60 (i.e. NSPS) and that meets any of the criteria in paragraphs 63.6590(c) (1) through (7) of the NESHAP Subpart ZZZZ, must meet the requirements of this regulation by meeting the requirements of 40 CFR part 60, subpart IIII. No further requirements apply for such engines under 40 CFR part 63.

For the type of engine proposed by the applicant, the requirements of these two regulations are summarized in a third regulation which is 40 CFR part 60, subpart 89 – Control of Emissions from New and In-use Nonroad Compression-Ignition Engines. Link to 40 CFR 60, subpart 89 . The applicable requirements are summarized at the following link: Link to Nonroad Engine Emission Standards . Those specifically applicable to the engine specified by the applicant are summarized in Table 10.

Table 10 – NSPS Subpart IIII, NESHAP ZZZZ Standards for Large Nonroad Engines (Tier 2)

Emergency Generator (225 ≤ kW < 560)	**CO** (g/kW-hr)[1]	**PM** (g/kW-hr)	**NMHC[2]+NO_X** (g/kW-hr)	**Diesel Fuel[3]** (sulfur)
2011 and later	3.5	0.20	4.0	15 ppm

1. g/kW-hr means grams per kilowatt-hour.
2. NMHC means Non-Methane Hydrocarbons.
3. Nonroad diesel specification from 40 CFR part 80, subpart I – Motor Vehicle Diesel Fuel; Nonroad, Locomotive, and Marine Diesel Fuel; and ECA Marine Fuel. Link to Nonroad Diesel Spec

The applicant proposed and the Department accepts the emission standards in Table 10 as BACT for CO, NO_X and PM. Use of low sulfur nonroad diesel will result in substantially less PM than indicated above and will also further minimize PM_{10}, and $PM_{2.5}$ emissions and precursors.

4.9. Facility-wide Miscellaneous Storage Tanks (EU 013)

The Suwannee Mill will have several diesel and oil storage tanks with capacities ranging from 265 gallons to 16,000 gallons. The Suwannee Mill will also include a 10,000 gallon reductant storage tank (e.g., urea), and two mold protection storage tanks (one of 27 gallons and one of 26,400 gallons capacity).

The emissions from the tanks were calculated using the standard tanks emission program and were shown to be insignificant. The applicant considers the fixed roof design of these tanks as sufficient to effectively eliminate VOC and proposes this design as BACT for these storage tanks.

The Department concurs with the applicant's proposal for BACT.

5. AIR QUALITY IMPACT ANALYSIS

5.1. Introduction

The proposed project will increase emissions of the following PSD-pollutants at levels in excess of the respective PSD significant emission rates: $PM/PM_{10}/PM_{2.5}$, VOC, CO, and NO_X. For these pollutants the applicant must provide a demonstration using approved air quality models that project emissions will not cause or contribute to a violation of an ambient air quality standard (AAQS) or PSD increment for the pollutants where they apply. Of these pollutants, PM_{10}, $PM_{2.5}$, CO, and NO_X (as NO_2) have defined national and state AAQS, and the pollutants PM_{10}, and NO_2 have defined PSD increments. In addition, significant impact levels (SIL) and de minimis monitoring levels are defined for these pollutants and are used to determine the scope of the modeling analysis and the need for additional ambient air monitoring data. There are no applicable PSD increments, AAQS, significant impact or de minimis monitoring levels for VOC.

5.2. Major Stationary Sources Near the Proposed Sawmill

To provide some perspective on the relative scale of the proposed project, the following tables list the largest stationary sources, by pollutant, in counties nearest Suwannee County. The maximum expected future emissions in tons/year from the proposed Suwannee Mill project are shown for comparison.

Table 11 - Largest Sources of SO_2 (2010) Nearest to the Proposed Project Site (tons/year)

Owner/Company Name	Site Name	County	Emissions
City of Gainesville	GRU Deerhaven Station	Alachua	3,181
White Springs Agri Chemicals	White Springs Agri Chemicals	Hamilton	2,387
Buckeye Florida	Buckeye Florida Pulp Mill	Taylor	1,938
Progress Energy	Suwannee River Plant	Suwannee	559
Klausner	Suwannee Mill (future)	Suwannee	27

Table 12 - Largest Sources of NO_X (2010) Nearest to the Proposed Site (tons/year)

Owner/Company Name	Site Name	County	Emission
Buckeye Florida	Buckeye Florida Pulp Mill	Taylor	1,592
Florida Gas Transmission	Bradford Compressor Station #16	Bradford	907
Florida Gas Transmission	Perry Compressor Station #15	Taylor	838
Florida Rock Industries	Baker Cement Plant	Alachua	866
Progress Energy	Suwannee River Plant	Suwannee	713
City of Gainesville	GRU Deerhaven Station	Alachua	576
Suwannee American Cement	Suwannee American Cement	Suwannee	469
City of Tallahasee	Hopkins Generating Station	Leon	304
Klausner	Suwannee Mill (Future)	Suwannee	176
Florida Power Corporation	U. of Florida Cogeneration	Alachua	130
White Springs Agri Chemicals	White Springs Agri Chemicals	Hamilton	95

Table 13 - Largest Sources of CO (2010) Nearest to the Proposed Site (tons/year)

Owner/Company Name	Site Name	County	Emission
Buckeye Florida	Buckeye Florida Pulp Mill	Taylor	5,700
Suwannee American Cement	Suwannee American Cement	Suwannee	462
Klausner	Suwannee Mill (future)	Suwannee	451
City of Gainesville	GRU Deerhaven	Alachua	206
Florida Power Corp	Suwannee River Plant	Suwannee	174
Gilman Building Products	Gilman Building Products	Taylor	147
City of Tallahassee	Hopkins Generating Station	Leon	117
Florida Gas Transmission	Bradford Compressor Station #16	Bradford	109
Florida Gas Transmission	Perry Compressor Station #15	Taylor	96

Table 14 - Largest Sources of PM_{10} (2010) Nearest to the Proposed Site (tons/year)

Owner/Company Name	Site Name	County	Emission
Buckeye Florida	Buckeye Florida Pulp Mill	Taylor	616
City of Gainesville	GRU Deerhaven Station	Alachua	206
Klausner	Suwannee Mill (future)	Suwannee	51
Florida Rock Industries	Baker Cement Plant	Alachua	51
City of Tallahassee	Hopkins Generating Station	Leon	44
Progress Energy	Suwannee River Plant	Suwannee	33

Table 15 - Largest Sources of VOC (2010) Nearest to the Proposed Site (tons/year)

Owner/Company Name	Site Name	County	Emissions
Klausner	Suwannee Mill (future)	Suwannee	1,339
Buckeye Florida	Buckeye Florida	Taylor	617
Gilman Building Products	Gilman Building Products	Taylor	216
Gilman Building Products	Gilman Building Products, L. Butler	Union	149
Sebring Marine Industries	Williston Airport Plant	Levy	90
Sivance	Sivance	Alachua	58
Florida Gas Transmission Co	Bradford Co Station #16	Bradford	57

The main industrial pollutants in Suwannee and the surrounding counties are from cement and fertilizer manufacturing, forest products, natural gas transmission and “medium-size small power plants. To further illustrate the major emission sources nearest to this proposed project, refer to Figure 21 below.

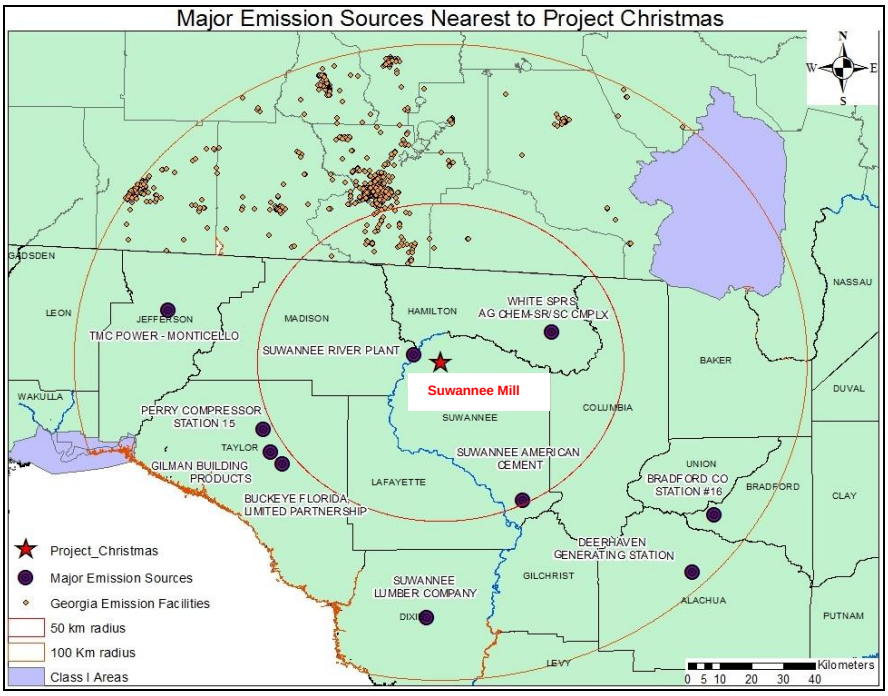

Figure 21 - Major Pollution Sources Nearest to the Klausner Suwannee Mill Project

All Florida facilities within a 100 km radius of the proposed Suwannee Mill that produce emissions of at least 100 tons/year or greater in PM_{10}, $PM_{2.5}$, SO_2, VOC, CO, or NO_X in the state of Florida have been depicted. Every Georgia source, regardless of emissions, has also been shown in the graphic below.

Because NO_X and SO_2 are the key pollutants or precursors of other pollutants (such as ozone and $PM_{2.5}$), there has been a National focus on reducing these emissions, especially from power plants. The Department graphed the SO_2 and NO_X emission trends during the period 1998-2010 from power plants in Florida that report their emissions to the EPA Clean Air Markets database. This exercise helps to put the local emissions near Suwannee County into better perspective by considering the larger sources that actually affect regional air quality including that of Suwannee County. The results are summarized in Figure 22.

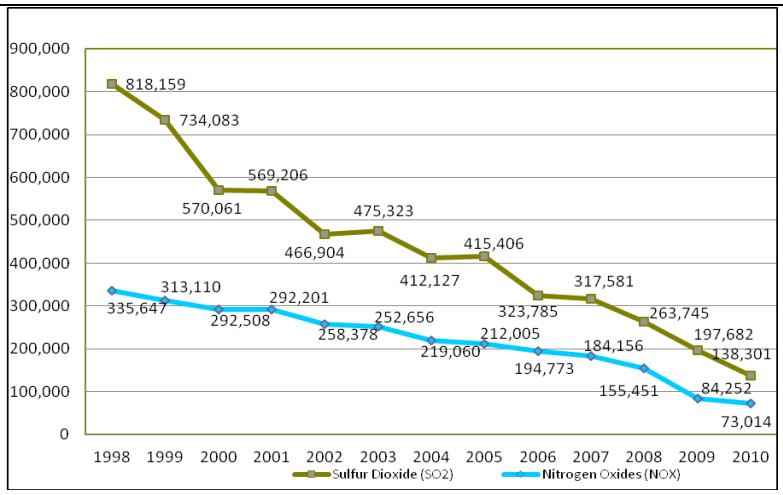

Figure 22 – SO_2 and NO_X reductions in TPY at Florida Power Plants (1998-2010)

SO_2 emissions from power plants in Florida have declined by nearly 680,000 tons/year and 83% referenced to 1998. NO_X emissions from power plants in Florida were reduced by nearly 263,000 tons/year and 78% referenced to 1998. The main reasons include installation of air pollution control equipment on conventional coal-fueled power plants and construction of natural gas-fueled combined cycle units such as the planed PEEC to add or replace system capacity.

SO_2 emissions from power plants in the Southeast U.S. were reduced by nearly 2,200,000 tons/year and 64% referenced to emissions in 1995. Over 1,200,000 tons/year of those reductions occurred during the recent three years period of 2008-2010. NO_X emissions from power plants in the Southeast U.S. were reduced by nearly 1,300,000 tons/year and 74% referenced to emissions in 1995. Almost 450,000 tons/year of those reductions occurred during 2008-2010.

The state and regional SO_2 and NO_X reduction trends will continue as coal fueled power plants complete their pollution control projects to control SO_2, NO_X and hazardous air pollutants. By comparison, the SO_2 and NO_X emissions from the Suwannee Mill (27 and 176 tons/year, respectively) will be miniscule compared with the statewide emissions and emission reductions of these pollutants.

5.3. Ambient Air Monitoring Surrounding Proposed Facility

The State ambient air monitoring network operated by the Department and its partners (local air pollution control programs) includes monitors in counties containing over 90% of the population. As Figures 23 and 24 indicate, the ambient air monitoring sites are concentrated in areas of high population density, along the coasts and near major highways in the interior portion of the state.

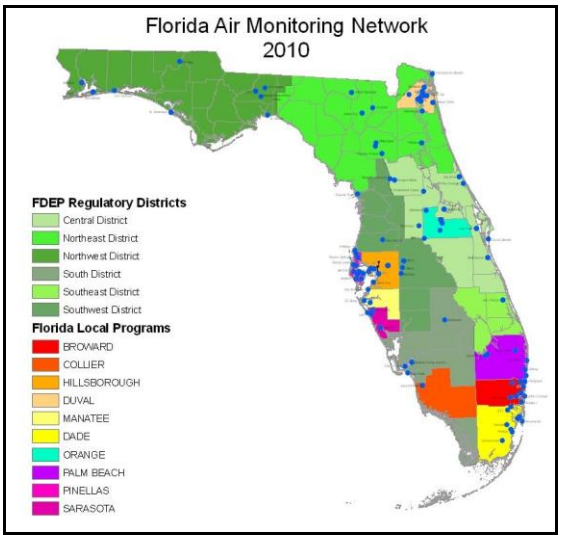

Figure 23 – Air Monitoring Network

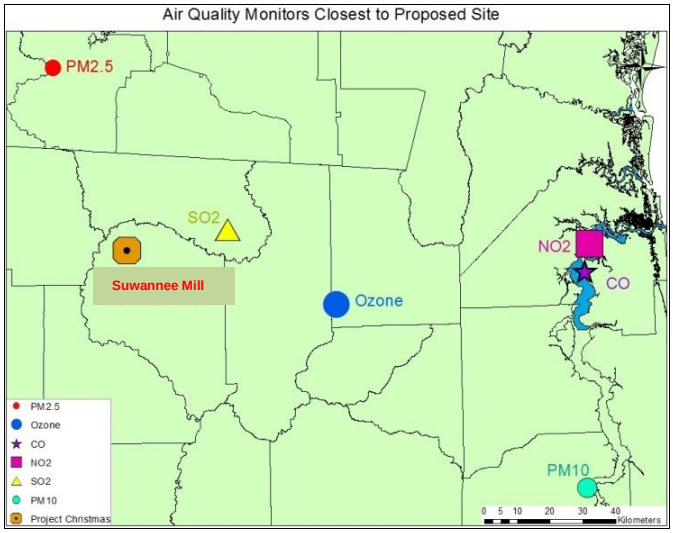

Figure 24 - Monitors Closest to the Project

These monitors are used to estimate the existing air quality in the area of the proposed facility. The nearest NO_2 monitor is in Jacksonville (Duval County). It is in an urban location and is influenced by mobile source emissions as well as large power plants. The Suwannee Mill will be located in a rural area with significantly lower traffic counts and smaller power plants. Therefore, the Jacksonville NO_2 site will provide very conservative background concentrations for modeling purposes.

The PM_{10} monitor in Palatka (Putnam County) is in a rural location and has complete 2008-2010 data, whereas the Jacksonville PM_{10} monitor has incomplete data for the same period. The data from the Palatka PM_{10} monitor are nevertheless conservative (high side), given the location of a large coal-fueled power plant (Seminole Electric) and the large Georgia-Pacific Pulp and Paper Mill in the same city.

The $PM_{2.5}$ monitor in Valdosta, Georgia was used to represent the background concentration for the project site because it is significantly closer than the other four candidate monitoring locations in Florida, and is similar to the Suwannee area, but with an urban component.

The nearest CO monitor is in Duval County and provides conservative (high) background data given the mobile source component. The SO_2 monitor in Hamilton County is representative as well for Suwannee and the nearby counties.

The ozone monitor in Baker County was selected as representative because it is located in a rural area which is relatively near and similar to the proposed project site. In Figure 25 below, it is clear that the ozone monitors in Baker and Columbia Counties have similar compliance values and are in attainment with the ozone AAQS.

Air quality measurements from these monitors are summarized in Table 16.

Table 16 - Ambient Air Quality Measurements Nearest to the Project Site (2008-2010)

Pollutant	Location (Site Number)	Averaging Period	Ambient Concentration			
			Compliance Period	Value	Standard	Units [a]
PM_{10}	Putnam County (B1071008)	24-hour [b]	2008-2010	58	150	$\mu g/m^3$
		Annual [c]	2008-2010	19	50	$\mu g/m^3$
$PM_{2.5}$	Valdosta, GA	24-hour [d]	2008-2010	20	35	$\mu g/m^3$
		Annual [e]	2008-2010	9	15	$\mu g/m^3$
SO_2	Hamilton County (B0470015)	1-hour [i]	2010	23	75	ppb
		3-hour [f]	2008	18	500	ppb
		24-hour [f]	2010	3	140	ppb
		Annual [c]	2008-2010	1	30	ppb
NO_2	Duval County (L0310032)	Annual [c]	2010	18	100	$\mu g/m^3$
		1-hour [h]	2008-2010	79	188	$\mu g/m^3$
CO	Duval County (L0310080)	1-hour [f]	2010	2	35	ppm
		8-hour [g]	2010	2	9	ppm
Ozone	Baker County (B0030002)	8-hour [g]	2008-2010	62	75	ppb

a. Units are in micrograms per cubic meter ($\mu g/m^3$); parts per billion (ppb); or parts per million (ppm).
b. Not to be exceeded on more than an average of one day per year over a three-year period.
c. Arithmetic mean.
d. Three-year average of the 98th percentile of maximum daily 24-hour concentrations with exceptional events excluded (as approved by EPA).
e. Three-year average of the arithmetic annual means.
f. Not to be exceeded more than once per year.
g. Three-year average of the annual 4th highest daily 8-hour maximum.
h. Three-year average of the annual 98th percentile maximum daily 1-hour value (design value).
i. Three-year average of the annual 99th percentile maximum daily 1-hour value.

5.4. Existing Ambient Air Quality Near Project Site – $PM_{2.5}$ and Ozone

Ozone is a key indicator of the overall state of regional air quality. It is not emitted directly from combustion processes. Rather it is formed from VOC and NO_X emitted primarily from regional industrial and transportation sources. VOC is also emitted from authorized agricultural fires, natural drought-

related fires and natural emissions from vegetation. These two precursors participate in photochemical reactions that occur on an area-wide basis and are highly dependent on meteorological factors.

Ozone limits and measurements in Table 16 are summarized on three year blocks, rolled annually. The reported ozone value was calculated by taking the maximum 8-hour readings recorded each day during the three years. The fourth highest of the recorded maxima were identified for each year and then the average of those three values was reported as the compliance value, and is compared to the standard of 75 parts per billion (ppb).

The ozone monitor located in Baker County, Florida and the $PM_{2.5}$ monitor in Valdosta, Georgia are most representative of the ambient air quality near the Suwannee Mill project site. The Baker County ozone compliance value is 62 ppb. It is shown in Figure 25, which shows the highest compliance values measured in each county where at least one ozone station is located.

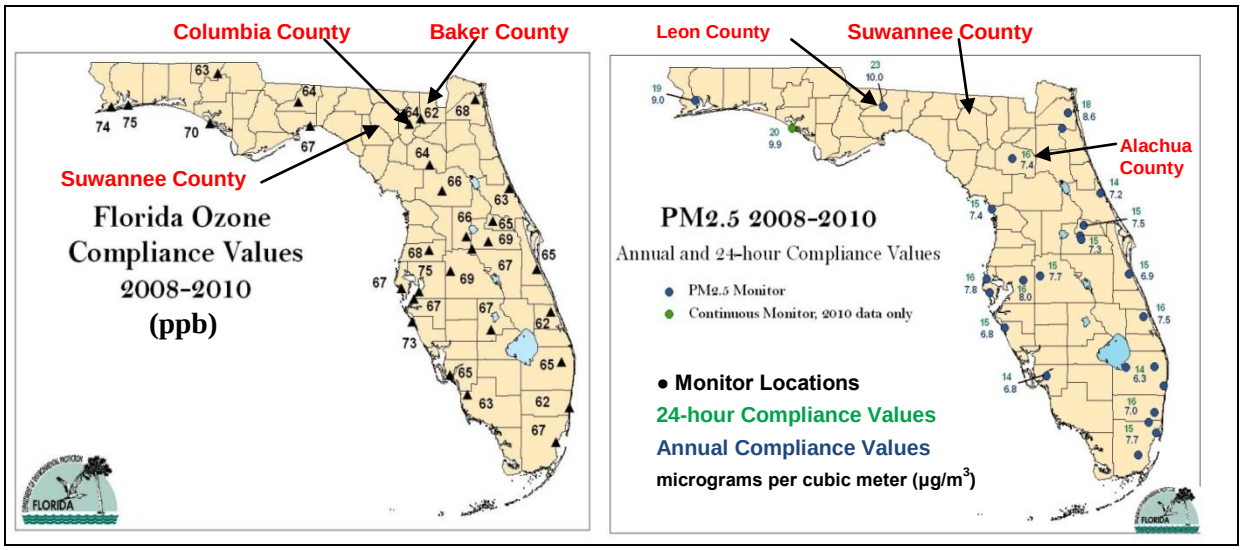

Figure 25 – Florida Ozone Compliance Values **Figure 26 – Florida $PM_{2.5}$ Compliance Values**

$PM_{2.5}$ (also known as PM_{fine}) is another key indicator of the overall state of regional air quality. Some $PM_{2.5}$ is directly emitted as a product of combustion from transportation and industrial sources as well as fires. Much of it consists of particulate nitrates and sulfates formed through chemical reactions between gaseous precursors such as SO_2 and NO_X from combustion sources and ammonia (NH_3) naturally present in the air or added by other industrial sources.

$PM_{2.5}$ limits and measurements are summarized on three-year blocks, rolled annually. The location of the Valdosta, Georgia monitor is shown in Figure 24 and not in Figure 26. The results from this monitor, in addition to results from the monitors in Leon and Alachua Counties (approximately equidistant on either side of the Klausner site provide an excellent basis to determine whether Suwannee County is also in attainment with the $PM_{2.5}$ AAQS.

The reported 24-hour compliance value for $PM_{2.5}$ is 20 µg/m^3 as indicated in Table 16 for the Valdosta site, and was calculated by taking the average 24-hour readings recorded each day during the three years (2008-2010). The value for each year that exceeds 98% of all daily measurements within each given year was identified and then the average of those three numbers was reported as the 24-hour compliance value and compared with the standard of 35 µg/m^3. The simple average of all $PM_{2.5}$ measurements at the Valdosta monitor within each three years (2008-2010) was also calculated. The mean of the three averages (9 µg/m^3) was reported as the annual compliance value and compared with the standard of 15 µg/m^3. $PM_{2.5}$ results from Leon and Alachua County monitors for both averaging periods are also less than the $PM_{2.5}$ AAQS. The results indicate that Suwannee County is in attainment with the applicable ozone and $PM_{2.5}$ AAQS.

5.5. Air Quality Impact Analysis

Significant Impact Analysis

Significant Impact Levels (SIL) are defined for CO, PM_{10}, $PM_{2.5}$, and NO_2. A significant impact analysis is performed on each of these pollutants to determine if a project can cause an increase in ground level concentration greater than the SIL for each pollutant.

The EPA-approved AERMOD modeling system was used by the applicant to address the significant impact on the PSD Class I area Okefenokee National Wildlife Refuge (NWR) with respect to the more restrictive Class I significance levels. The applicant used SIL recently established by the EPA for $PM_{2.5}$, and NO_2 (1-hour).

In order to conduct a significant impact analysis, the applicant used the proposed project's maximum short-term emissions as inputs to the models. The highest predicted short-term concentrations and highest predicted annual averages predicted by this modeling were compared to the appropriate SIL for the PSD Class I and Class II Areas.

If this modeling for a particular pollutant shows ground-level increases less than its SIL, the applicant is exempted from conducting any further modeling. If the modeled concentrations from the project exceed the SIL, then additional modeling including emissions from all major facilities or projects in the region (multi-source modeling) is required to determine the proposed project's impacts compared to the AAQS and PSD increments for those pollutants.

For the Class II analysis, a combination of fence line, near-field and far-field receptors were chosen for predicting maximum concentrations in the vicinity of the project. The fence line receptors consisted of discrete Cartesian receptors spaced at 100-meter intervals around the facility fence line. The remaining receptor grid consisted of densely spaced Cartesian receptors at 100 meters apart extending out 5 km. For the 1-hour NO_2 analysis, a Cartesian grid was extended out to 10 km.

For the Class I analysis, project impacts were predicted at 360 receptors located at 50 km from the mill, surrounding the mill. The applicant utilized the maximum allowable lb/hour emission rates in the Class I screening analysis. These rates were derived from the worst-case annual emission rates which assumed a continuous operation of 8,760 hours per year of all emission units. These rates are intentionally different from the applicant's requested annual potential emissions due to requested fuel usage limits that ensured the facility will emit less than 75,000 tons/year of non-biogenic greenhouse gas emissions, as CO_2e.

The results of the applicant's significant impact analysis are shown below in Tables 17 and 18. Maximum predicted impacts are greater than the applicable SIL for the Class II area for PM_{10}, $PM_{2.5}$, and NO_2. Consequently, a full AAQS analysis (in which the PSD Increment analysis considering all sources of these pollutants in the area) is required.

For the Class I analysis in the Okefenokee NWR, located 67 km from the project site, the maximum predicted impacts of due to the proposed project are all predicted to be less than the proposed PSD Class I significant impact levels for all pollutants and averaging periods. Thus, no cumulative impact analyses were performed at the Okefenokee NWR since the project's impacts are expected to be well below the Class I SIL.

Preconstruction Ambient Monitoring Requirements

A preconstruction monitoring analysis is performed for those pollutants with listed significant monitoring concentrations (de minimus levels). These are levels, which, if exceeded, would potentially require pre-construction ambient monitoring. As shown in Table 19 below, the maximum predicted impacts due to the proposed project are predicted to be below the PSD de minimis concentration levels for NO_2, and PM_{10}, but above the de minimis concentration levels for $PM_{2.5}$.

Table 17 - Maximum Predicted Air Quality Impacts for Comparison to the PSD Class II SIL

Pollutant	Averaging Time	Max Predicted Impact ($\mu g/m^3$)	Significant Impact Level ($\mu g/m^3$)	Ambient Air Standards ($\mu g/m^3$)	Significant Impact?	Max Distance of Significant Impact (km)
PM_{10}	Annual	2.1	1	50	Yes	0.7
	24-Hour	8.7	5	150	Yes	0.9
$PM_{2.5}$	Annual	1.1 [c]	0.3	15	Yes	1.1
	24-Hour	6.2 [c]	1.2	35	Yes	2.1
NO_2	Annual	4 [b]	1	100	Yes	1.0
	1-Hour	47.4 [a]	7.6	189	Yes	3.9
CO	1-hour	175	2,000	40,000	No	Not Applicable
	8-hour	115	500	10,000	No	Not Applicable

a. Assumes 80% conversion (annual) of NO_X to NO_2, i.e., the tier 2 modeling approach.
b. Assumes 75% conversion (1-hour) of NO_X to NO_2, i.e., the tier 2 modeling approach.
c. Final SIL for $PM_{2.5}$ was established by EPA on December 20, 2010.

Table 18 - Maximum Air Quality Impacts of Suwannee Mill for Class I SIL

Pollutant	Averaging Time	Max. Predicted Impact ($\mu g/m^3$)	Class I SIL ($\mu g/m^3$)	Significant Impact?
PM_{10}	Annual	0.01	0.2	No
	24-hour	0.15	0.3	No
$PM_{2.5}$	Annual	0.004	0.04	No
	24-hour	0.06	0.07	No
NO_2 [b]	Annual	0.01 [a]	0.1	No

a. Assumes 80% conversion of NO_X to NO_2, i.e., the tier 2 modeling approach.

Table 19 – Maximum Air Quality Impacts for Comparison to De Minimis Concentration Levels

Pollutant	Averaging Time	Max Predicted Impact ($\mu g/m^3$)	De Minimis Level ($\mu g/m^3$)	Impact Greater Than De Minimis?
PM_{10}	24-hour	9.3	10	No
$PM_{2.5}$	24-hour	5.3	4	Yes
NO_2	Annual	4.2 [a]	14	No

a. Assumes 75% conversion of annual NO_X to NO_2, i.e., the tier 2 modeling approach.

Because the predicted maximum 24-hour $PM_{2.5}$ and PM_{10} concentrations are greater than the de minimis levels, a pre-construction ambient monitoring analysis is required for $PM_{2.5}$ as part of the application.

Models, Emissions Data, and Meteorological Data Used in the AAQS and PSD Increments Analysis

The EPA-approved AERMOD modeling system was used to evaluate the pollutant emissions from the proposed project in the surrounding Class II Areas and to conduct a screening analysis for Class I Areas. The AERMOD modeling system incorporates air dispersion based on planetary boundary layer turbulence

structure and scaling concepts, including the treatment of both surface and elevated sources, and both simple and complex terrain. AERMOD contains two input data processors, AERMET and AERMAP. AERMAP is the terrain processor and AERMET is the meteorological data processor.

A series of specific model features, recommended by the EPA, are referred to as the regulatory options. The applicant used the EPA recommended regulatory options. The Department has confirmed that the modeled ambient concentrations were determined using the unmodified EPA-approved AERMOD, AERMAP, and AERMET models. Direction specific downwash parameters were used for all sources for which downwash was considered.

Emissions data used in the modeling analysis were obtained from the DEP ARMS database, DEP permit files, and recent PSD permit reviews. Emissions data for the new proposed facility derive from the proposed maximum permit limits imposed on the facility for each pollutant. The applicant conservatively utilized the maximum lb/hour rate for each emission unit for each PSD pollutant for all averaging periods, instead of utilizing annual rates for longer-termed averaging periods.

The AERMET meteorological data used for this analysis consisted of a concurrent 5-year period of hourly surface weather observations from the Gainesville Regional Airport surface National Weather Service (NWS) observation station, and twice-daily upper air soundings from the Jacksonville NWS, respectively. The 5-year period of meteorological data is from 2005 through 2009. The location of the proposed facility is 109 km northwest of the Gainesville Regional Airport.

To assess the representativeness of these data for the proposed site, a comparison was made of the land-use at the Gainesville Regional Airport with that at the proposed site. The Suwannee Mill's post-construction surface roughness parameter assignments are similar to the Gainesville NWS station. The surface roughness is evaluated on a sector by sector (30°) basis and over a much smaller area than albedo and Bowen Ratio (1 km vs. 10 km); therefore, there is greater variability between the calculated surface roughness values at the two sites.

Given the differing locations (airport vs. site location for lumber production facility), it is unlikely that any other NWS station within Florida would have significantly better surface characteristics correlation; further, a more distant NWS station would likely have meteorological conditions that are more dissimilar to the Suwannee Mill than the Gainesville NWS station.

One of the main factors considered in the determination of representativeness was proximity to the coast. The meteorological conditions in coastal areas are heavily influenced by sea and land breezes and thus the geographic orientation of the coastline. Because the Gainesville NWS station is located approximately the same distance from the coast as the Suwannee Mill, it was determined that the meteorological conditions would be more representative than a meteorological station located near the coast. Meteorological files processed in AERMET were based on airport surface characteristics, not facility post-construction characteristics.

The applicant conducted a screening analysis using AERSCREEN with meteorological conditions based on both airport and post-construction facility land use formulations in order to determine the worst-case land use characterization. Table 20 presents the results from the screening analysis.

Table 20 - AERSCREEN Modeling Results

Pollutant	Land Use Characteristics	Modeled Impacts ($\mu g/m^3$)	Worst-Case Land Use
NO_2	Airport	53.9	Airport
	Facility	53.2	
$PM_{2.5}$	Airport	28.9	Airport
	Facility	28.8	

As shown, the maximum modeled impacts occurred when using the airport surface characteristics and not facility surface characteristics for both pollutants. Because the modeling was performed using meteorological files based on airport surface characteristics, the results represent the worst-case impacts for the proposed project site.

In reviewing this permit application, the Department has determined that the application complies with the applicable provisions of the stack height regulations as revised by EPA on July 8, 1985 (50 FR 27892). Portions of the regulations have been remanded by a panel of the U.S. Court of Appeals for the D.C. Circuit in NRDC v. Thomas, 838 F. 2d 1224 (D.C. Cir. 1988). Consequently, this permit may be subject to modification should EPA revise the regulation in response to the court decision. This may result in revised emission limitations or may affect other actions taken by the source owners or operators. A more detailed discussion of the required analyses follows.

Multi-source PSD Class II Increment Analysis

The PSD increment represents the amount that new sources in an area may increase ambient ground level concentrations of a pollutant from a baseline concentration. A PSD increment analysis was required for PM_{10}, NO_2, and $PM_{2.5}$. The maximum predicted annual and maximum predicted high, second high short-term average PSD Class II area impacts from this project and other increment-consuming sources in the vicinity of the proposed facility are shown in Table 21 below.

Table 21 - PSD Class II Increment Analysis

Pollutant	Averaging Time	Max Predicted Impact ($\mu g/m^3$)	Allowable Increment ($\mu g/m^3$)	Impact Greater Than Allowable Increment?	Percentage of Increment Consumed
PM_{10}	24-hour	8.5	30	No	28%
	Annual	2.3	17	No	14%
NO_2	Annual	4.2	25	No	17%
$PM_{2.5}$	24-hour	6.3	9	No	70%
	Annual	1.4	4	No	35%

AAQS Analysis

For pollutants subject to an AAQS review, the total impact on ambient air quality is obtained by adding a "background" concentration to the maximum modeled concentration. This "background" concentration is based on existing monitoring data for each pollutant and representative of the area of the proposed source. This background is intended to account for sources of a particular pollutant that are not explicitly modeled. Since no attempt is typically made to subtract out the impacts due to the explicitly modeled sources on these monitored values, there is some amount of double-counting reflected in the total concentration (modeled + background) used to compare with the appropriate AAQS.

An evaluation of the emission inventories for background sources considered in the PSD application for the Suwannee Mill was performed to determine whether the method used to eliminate background sources from NAAQS compliance modeling demonstration was reasonable. All background sources within the significant impact area of the project were included in the modeling demonstration.

For facilities within 50 km of the SIA, the 20D screening process was applied to exclude insignificant sources. In this process, regional sources whose potential emissions were less than 20 times the distance to the edge of the SIA were eliminated because they are presumed to have negligible contributions to receptors in the SIA. Regional sources located within close proximity to each other (2 km) were evaluated cumulatively in the 20D analysis to determine whether the combined “source” was still appropriate to exclude.

For the NO_2 inventory, the 20D procedure was based on an evaluation of NO_X emissions from the facility of interest. However, if a source was included and modeled in the emissions inventory the Ambient Ratio Method (ARM) value of 0.8 was applied to the NO_X emission rate to estimate emissions of NO_2 (tier 2 ratio). When available, the applicant utilized potential emissions data for completing the 20D screening analysis. For instances in which potential emissions data was unavailable, actual emissions were utilized. Inventory data was provided by DEP and the Department has determined that this approach is conservative and appropriate for the NAAQS and Increment modeling analyses.

As previously stated, the applicant completed a revised 20D screening analysis in which all major and minor sources located within 2 km from each other were grouped. Some of the revised totals yielded just slightly over the 20D screening threshold. Given that the minor source estimates are based on the major source thresholds as upper bound, the allowable emission rates for minor source would likely yield combined totals less than the 20D threshold. Based on this and the magnitude of distance between the inventory sources and modeled receptors, those sources are highly unlikely to have an appreciable contribution on the modeled design impacts. Therefore, these combined facilities were not included in the regional inventory.

The Significant Impact Distance (SID) is 54 km. Parts of Georgia are located within this boundary. The applicant included Lownes, Echols, Brooks, and Cinch Counties from Georgia in their modeling analysis. The Georgia Environmental Protection Division (EPD) has confirmed that no recent PSD applications have been submitted in any of these four counties. The Department also confirms that no PSD applications have been submitted in Florida counties that fall within the SID.

Site specific data for facilities in Georgia can only be obtained through time-consuming, on-site file reviews. Instead of undergoing this process, the applicant conservatively assumed the major threshold of 100 tons/year when completing the 20D screening analysis for minor sources.

For the $PM_{2.5}$ cumulative source analysis, the applicant utilized the 99th percentile instead of the standard 98th percentile, and added the total impacts from the project and regional inventory to the background concentration. This is a more conservative approach, as the 99th percentile is the high-forth-high instead of the high-8th-high result. The Department has also confirmed that all significant receptors from the $PM_{2.5}$ analysis are located in Suwannee County, and because this is the first complete PSD application received by the department after the minor source baseline date was established on October 21, 2011, there are currently no additional increment affecting sources for this pollutant in the area.

The sources that are explicitly modeled include the subject facility and nearby sources that are judged to potentially have a significant interaction with the proposed facility. The appropriate calculations for the modeled and background values are different for each pollutant, but generally follow the form for compliance with the AAQS. Table 22 shows the results of this analysis. As shown in the table, emissions from the proposed facility are not expected to cause or contribute to a violation of an AAQS.

Table 22 - Ambient Air Quality Impacts

Pollutant	Averaging Time	Major Sources Impact ($\mu g/m^3$)	Background Concentration ($\mu g/m^3$)	Total Impact ($\mu g/m^3$)	Total Impact Greater Than AAQS?	AAQS ($\mu g/m^3$)
PM_{10}	24-hour	9.3	58	67	No	150
	Annual	2.0	19	22	No	50
$PM_{2.5}$	24-hour	5.3	20	25	No	35
	Annual	1.3	9.4	11	No	15
NO_2	1-hour	53	79	132	No	188
	Annual	4.2	18	22	No	100

Based on the results of the air quality modeling analysis, the operation of the new Suwannee Mill will not cause or contribute to a violation of an ambient air quality standard or maximum allowable concentration increase (PSD increment).

Ozone Modeling

Projects with VOC and NO_X emissions greater than 100 tons/year are required to perform an ambient impact analysis for ozone including the gathering of preconstruction ambient air quality data. The applicant estimated annual potential VOC and NO_X emissions from the project to be 1,339 and 176 tons/year respectively.

Generally speaking, within the Southeastern states, ozone formation in the non-coastal areas is significantly influenced by natural VOC emissions emitted driven by forested areas. Pine forest emissions such as isoprene readily participate in ozone formation. Because of the large pools of available VOC to participate in ozone formation, the southeastern U.S. is considered a NO_X-limited atmosphere with respect to ozone formation.

Thus, to some degree, additional VOC do not greatly drive further ozone formation, while NO_X emissions and their reductions have a greater influence when implementing ozone control strategies. The large reductions in NO_X in the southeastern U.S. discussed in Section 4.2 above and, in particular, those in Florida, have slowly and inexorably driven ozone levels downward. These NO_X reductions are measured in terms of tens and hundreds of thousands of tons/year while the resulting reductions in ambient ozone concentrations are measured in terms of a few parts per billion (ppb).

The ozone monitor in Baker County is 60 km southeast of the proposed project site and is sufficient for the purposes of background values at the proposed site. Refer to Figure 25 above (Statewide NO_X and SO_2 reductions) and Figure 27 below.

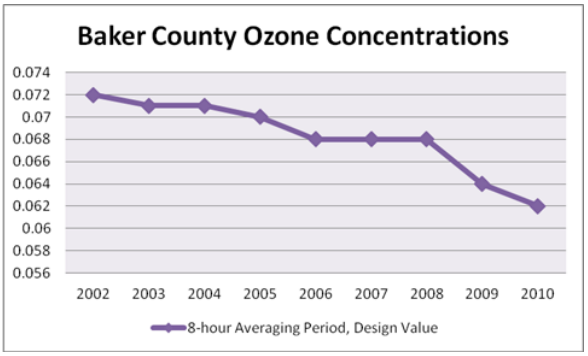

Baker County Monitor Ozone Value	8-hour Ozone NAAQS	% of NAAQS
0.062 ppm (62 ppb)	**0.075 ppm (75 ppb)**	**83%**

Figure 27 – Baker County Ozone (2002-2010)

Clearly the Southeast and State-wide regional NO_X reductions have had a major effect in reducing ozone compliance values by approximately 10 ppb at the Baker County monitor and by approximately equal values throughout the entire ambient air monitoring network.

The applicant conducted a very qualitative assessment of the project impacts on ambient ozone levels. Potential NO_X emissions from facilities within 54 km of the proposed were considered, because 54 km is equivalent to the 1-hour NO_2 Significant Impact Area (SIA) plus 50 km. Because the 54 km radius of the project extends into Georgia, expected ozone impacts included both Florida and Georgia.

As shown in Table 23, the project NO_X increases comprise a very small fraction of the overall NO_X budget in the more immediate area.

Table 23 – Area-wide NO_X Emission Increase

Project NO_X Emissions (tons/year)	Area-wide NO_X Emissions (tons/year)	Area-wide NO_X Increase (%)
176	8,400	2.1%
1. Potential NO_X emissions from all facilities within 54 km of proposed project		

Even if all of the Suwannee Mill NO_X emissions contributed to ozone formation resulting in a 2% increase above the Baker County monitor value of 62 ppb, the area would still be in attainment with the 8-hour ozone standard.

Based on this small increase in regional NO_X emissions, the Suwannee Mill will have at most a negligible impact on area and regional ozone values. To demonstrate quantitatively the negligible effect of 1,339 tons/year of VOC and 176 tons/year of NO_X on area-wide or regional ozone concentrations requires a very sophisticated and expensive model would need to be run for the entire region. The key inputs to the model would be traffic, power plants throughout the region, other industrial sources, and meteorology.

The uncertainty in any regional ozone model would be greater than the contribution from this project. The past and ongoing area-wide and regional reductions of NO_X would overwhelm (by improvement) any possible negative effect from the Klausner Mill.

5.6. Additional Impacts Analysis

Growth-Related Impacts Due to the Proposed Project

A growth analysis is intended to quantify the amount of new growth that is likely to occur in support of the facility and to estimate emissions resulting from associated growth. Associated growth includes residential and commercial/industrial growth resulting from the new mill. Residential growth depends on the number of new employees and the availability of housing in the area, while associated commercial and industrial growth consists of new sources providing services to the new employees and the mill.

According to the applicant, the Suwannee Mill will have approximately 350 full-time employees. These employees will be drawn from the local employment pool as the area selected for the site has high unemployment. In addition, approximately 220 indirect jobs will be created in the supply chain of the mill. Additional growth will be minimal, if at all, as the existing infrastructure is already in place.

Impact on Soils, Vegetation, and Wildlife

To address potential soil and vegetation impacts, two comparisons were used. First, the NAAQS results (or significance results if SIL was not reached) were assessed against the secondary NAAQS, which provide protection for public welfare, including protection against decreased visibility, damage to animals, crops, vegetation, and buildings.

The NAAQS analysis includes emissions from all mill sources and regional inventory sources. Additionally, NAAQS impacts (or Significance Analysis impacts for pollutants not requiring full NAAQS analyses be completed) were also compared by the applicant against conservative screening levels provided by EPA specifically to address potential soil and vegetation impacts. Table 24 shows that no impacts exceed the secondary NAAQS or the EPA screening levels. Thus, there are no adverse impacts expected on soils or vegetation.

Class I Area Impacts- Air Quality Related Values (AQRV)

A Q/D screening analysis was conducted to assess the potential impacts to Class I areas within 300 km of the Suwannee Mill. Okefenokee NWR is the closest Class I area to the proposed project and is located 67 km to the northeast.

Table 24 – Soil and Vegetation Impacts

Pollutant	Averaging Period	Total Concentration	Vegetation Sensitivity			Secondary NAAQS ($\mu g/m^3$)	Minimum Threshold	Threshold Exceeded?
			Sensitive ($\mu g/m^3$)	Intermediate ($\mu g/m^3$)	Resistant ($\mu g/m^3$)			
SO_2[3]	1-hour	-	917	-	-	N/A	917	No
	3-hour	-	786	2,096	13,100	1,300	786	No
	Annual	-	-	18	-	N/A	18	No
NO_2[4]	4-hour	132	3,760	6,400	16,920	N/A	3,760	No
	8-hour	132	3,760	7,520	15,040	N/A	3,760	No
	1-month	132	-	564	-	N/A	564	No
	Annual	22.2	-	94	-	N/A	94	No
CO[5]	1-week	115	1,800,000	-	18,000,000	N/A	1,800,000	No
PM_{10}[6]	24-hour	65.5	-	-	-	150	150	No
	Annual	23.3	-	-	-	50	50	No
$PM_{2.5}$	24-hour	25.3	-	-	-	35	35	No
	Annual	10.7	-	-	-	15	15	No
H_2S[7]	4-hour	-	28,000	-	560,000	N/A	28,000	No
Ethylene[7]	3-hour	-	-	47	-	N/A	47	No
	24-hour	-	-	1.2	-	N/A	1.2	No
Fluorine[7]	10-days	-	-	0.5	-	N/A	0.5	No
Beryllium[8]	1-month	-	-	0.01	-	N/A	0.01	No
Lead[8]	3-months	-	-	1.5	-	0.15	0.15	No

Results from the Significance Analysis or NAAQS Analysis where modeled impacts exceeded the SIL.

Screening concentrations based on Table 3.1 in *A Screening Procedure for Impact of Air Pollution Sources on Plants, Soil and Animals* , EPA, December 12, 1980. Minimum values noted if range listed.

The project did not trigger PSD for SO_2 therefore no SO_2 modeling was conducted. Total facility-wide emissions of SO_2 are equivalent to 26.6 tons/year and associated impacts are not anticipated to exceed the thresholds.

Results from 1-hour averaging period (NAAQS) are conservatively used for the 4-hour, 8-hour, and monthly impacts. Value includes background.

Maximum impact is for the 8-hour averaging period since AERMOD does not calculate a weekly averaging period. Based on Significance Analysis since NAAQS analysis was not required to performed.

Annual results from PSD Increment Analysis plus a background concentration of 21 $\mu g/m^3$ from the Comfort and Ports Road monitor in Putnam County.

No H_2S, Ethylene, Fluorine emissions are anticipated, hence no modeling was completed for these pollutants.

Lead and beryllium emissions from the project will be negligible.

The Federal Land Managers (FLM) specify screening criteria that may exempt a source from detailed AQRV impact review based on a source's annual emissions and distance from a Class I areas. [13] A source located greater than 50 km from a Class I area is considered to have negligible impacts with respect to Class I AQRVs if its total SO_2, NO_X, PM_{10}, and sulfuric acid mist (SAM) emissions (Q) divided by its distance to the source (D) is greater than 10.

[13] Report. Federal Land Managers Air Quality Related Values Working Group. Phase I Report. 2010 Revision.

In making this calculation, the value "Q" (in tons/year) is calculated by projecting the 24-hour maximum allowable emissions (sum of the mentioned pollutants) to an annualized value. The value "D" is given in km(in km), divided by the distance (km) from the Class I area (Q/D). If Q/D is less or equal to 10, the FLM generally do not request further Class I AQRV impact analyses.

A summary of the visibility-affecting pollutant emissions resulting from the proposed project are shown in Table 26 using the FLAG 2010 Approach.

Table 26 – Summary of Visibility Affecting Pollutant (VAP) Emissions

Pollutant	Facility Wide Emissions [1] (lb/hr)	Annualized Emissions [2] (tons/year)
Direct Particulate Emissions	41.1	180
NO_X	16.5	72.2
SO_2	6.11	26.8
Sum of Emissions	63.7	279

1. Maximum facility-wide VAP emissions averaged over 24 hours
2. Based on Federal Land Managers' Group (FLAG) Approach (2010)

The five Class I areas located within 300 km of the proposed project are listed in Table 27 with the respective Q/D values calculated by the applicant. The project's Q/D value with respect to each of the five Class I areas is clearly less than 10. Therefore, the proposed project will presumptively have no adverse impacts to visibility in the nearest Class I areas, and an AQRV analysis is not required.

Table 27 – Q/D Analyses for Class I Areas within 300 km of Suwannee Mill

Class I Area	Responsible FLM [1]	Minimum Distance (D) from Site (km)	Sum of Annualized VAP Emissions (Q) (tons/year)	Q/D [2]
Okefenokee	USFWS	67	279	4.1
St. Marks	USFWS	84		3.3
Bradwell Bay	USFS	135		2.1
Chassahowitzka	USFWS	182		1.5
Wolf Island	USFWS	201		1.4

1. USFWS denotes the US Fish and Wildlife Service (USFWS). USFS denotes the US Forest Service.
2. Q/D based on FLAG Approach (2010)

The USFS provided confirmation to the Department via email on January 20, 2012 that no adverse impacts to AQRV would occur at any Class I areas under its jurisdiction, including Bradwell Bay.[14]

6. CONCLUSION

The Department makes a preliminary determination that the project will comply with all applicable state and federal air pollution regulations as conditioned by the Draft Permit. This determination is based on a technical review of the application, the reasonable assurances provided by the applicant, and the conditions specified in the Draft permit. Further details of the analyses may be obtained by contacting:

Melody Lovin, Meteorologist at melody.lovin@dep.state.fl.us

David Read, Engineering Specialist at david.read@dep.state.fl.us

Marilyn Koletzke, P.E. at marilyn.koletzke@dep.state.fl.us

[14] Electronic Communication. Pitrolo, Melanie, USFS to Scearce, Lynn, Florida DEP. Re: Klausner Holding USA Inc., Suwannee Mill. January 20, 2012.