BULK BAG UNLOADERS

Automated Ingredient Systems Bulk Bag Unloaders are designed to meet the demanding requirements of today's industrial processes. AIS Bulk Bag Unloaders are available with several options to assist with the discharge of hard to handle materials. Massaging paddles keep material flowing at the discharge while hammer arms prevent mid-level bridging and rat holing in the bulk bag. A.I.S. Bulk Bag Unloaders are a safe, clean, and economical way to increase the efficiency of your industrial process. Shipping ingredients in bulk bags is less expensive for suppliers due in part to the decreased amount of material handling. Savings are typically passed on to customers who receive their ingredients in bulk bags. These same labor savings can be realized in your process by utilizing bulk bags, and allowing operators to spend time in other process areas rather than dumping bags by hand.

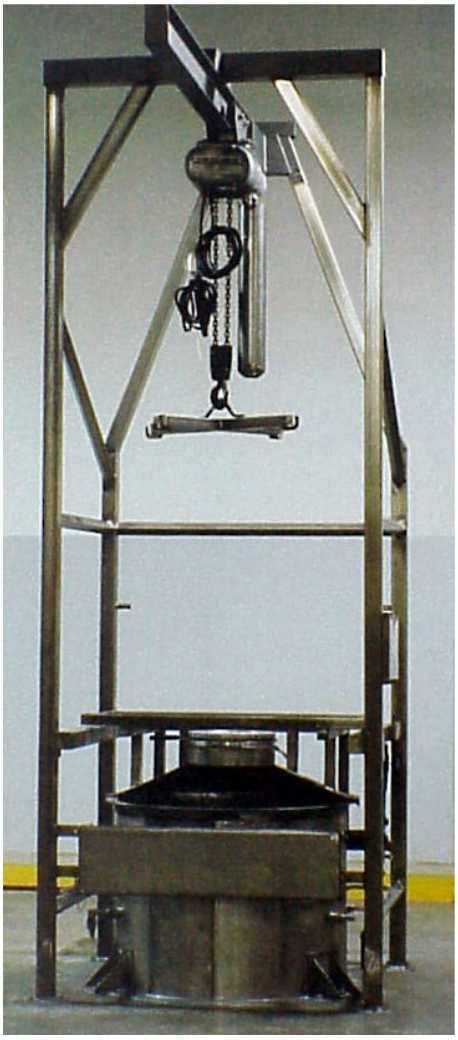

FEATURES

Heavy-Duty Construction - The Bulk Bag Unloader has a heavy-duty box tube structural design. Hoist style units have a unique A-frame design.

Loading Styles – Units are available with forklift pockets for loading via forklift or can be supplied with an I-beam, powered hoist, and trolley.

Materials of construction – Units are constructed of either carbon steel, or 304 stainless steel. Carbon steel units are finished with a stainless steel urethane exterior coating. Optional AIB approved food grade design is available.

Controls – Units can be supplied with either pneumatic or electric controls.

Massaging Paddles – Units are available with massaging paddles and mid-bag hammer arms to prevent bridging and rat holing.

Bag attachment frame – Heavy-duty construction allows lifting of various sizes of bulk bags with the inclusion of the optional powered hoist.

Additional Options – Options include receiving hoppers, untie boxes, level controls, and transfer equipment to deliver ingredients to their destination.

Automated Ingredient Systems, L.L.C.

P.O. Box 979 • Belton • Missouri • 64012 •Ph: 816-331-1600 • Fx: 816-331-1181 • info@ais-kc.com • www.ais-kc.com

DIMENSIONS

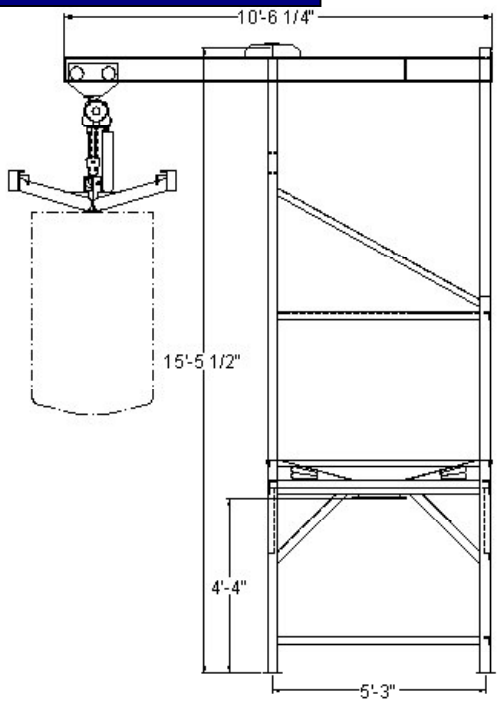

Hoist Style Frame

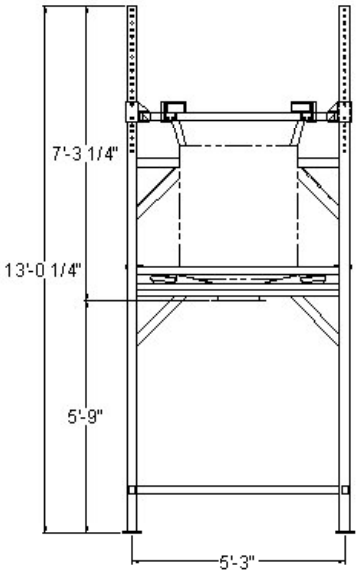

Forklift Style Frame
Stackable Frame

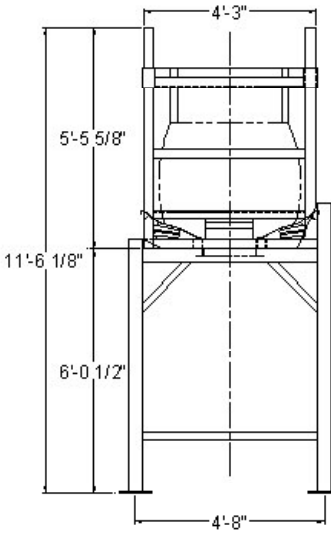

Low Profile
Stackable Frame

Dimensional information may vary based on bag size and discharge equipment. The bag used in the sketch above is a 40" tall bag.

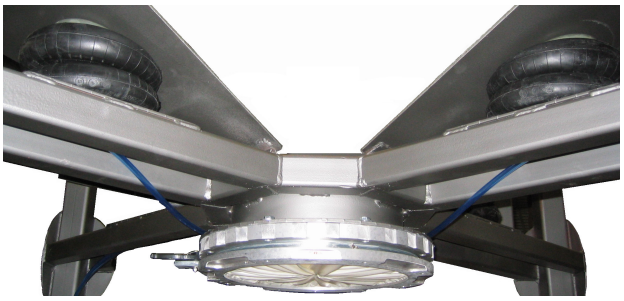

OPTIONS

Receiving Hopper
Untie Box
Multi-Speed Hoist Assembly
Air Operated Massaging Paddles
Iris Valve for Flow Control
Vibrating Screen for Pre-Scalping
Magnetic Grate

ACCESSORIES

Low Level Indicator
Crumblers and Lumpbreakers
Adjustable Frame
Automatic Bag Tensioner
Volumetric Feeder
Vibratory Feeder
Loss in Weight System
Gain in Weight System

P.O. Box 979 • Belton • Missouri • 64012 •Ph: 816-331-1600 • Fx: 816-331-1181 • info@ais-kc.com • www.ais-kc.com