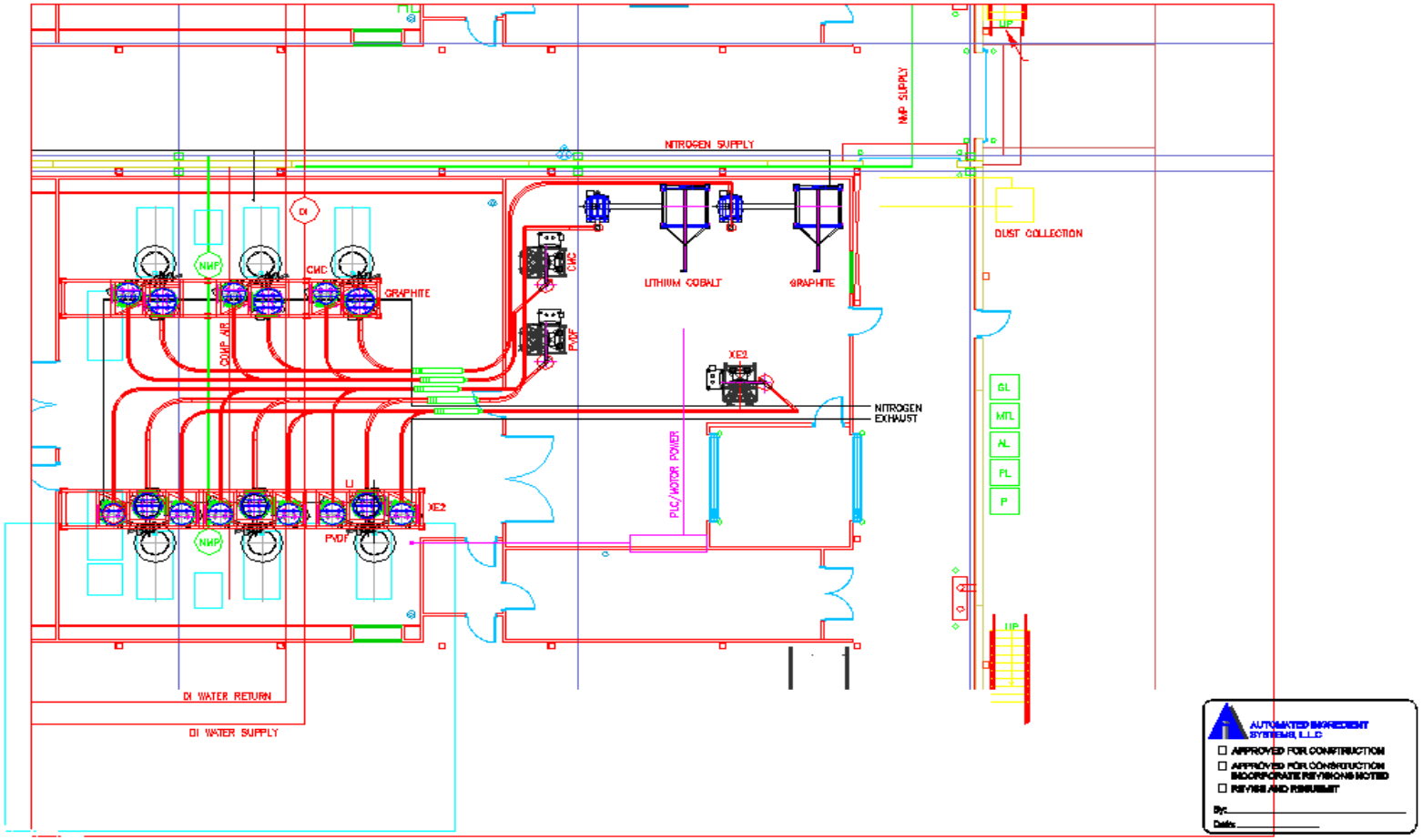

REV. | DATE | BY | DESCRIPTION

AUTOMATED INGREDIENT SYSTEMS, L.L.C.

P.O. BOX 481937
KANSAS CITY, MO 64148

PHONE: 816-462-2600
FAX: 816-462-2601
AISI@KCNET.COM

EQUIPMENT & PIPING
PLAN VIEW

SAFT
JACKSONVILLE, FL

SCALE	1"=12'
DRAWN BY	JWB
DATE	12/8/10
FLOW NO.	
PROJECT NO.	081019
FILE NAME	M081019-07

AUTOMATED INGREDIENT SYSTEMS L.L.C.

DRAWING NO.

M081019-07

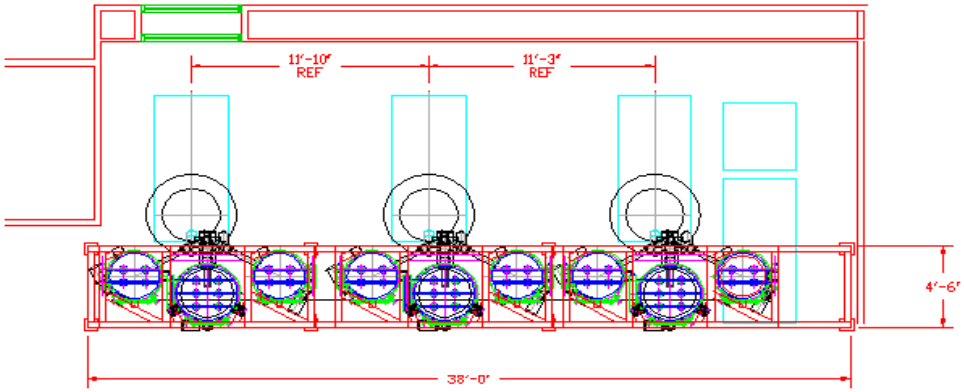

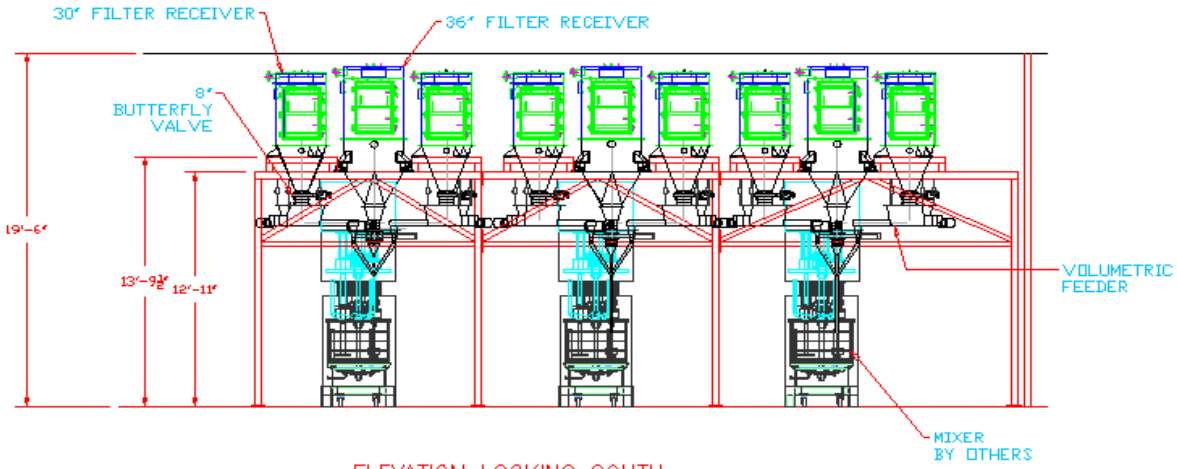

ELEVATION LOOKING SOUTH

REV.	DATE	BY	DESCRIPTION

AUTOMATED INGREDIENT SYSTEMS, L.L.C.

P.O. BOX 901921
KANSAS CITY, MO 64190

PHONE: 816-842-6800
FAX: 816-842-6201
AIS@SYCNET.COM

POSITIVE MIXERS
PLAN VIEW & ELEVATION

SAFF
JACKSONVILLE, FL

SCALE	1"=12"
DRAWN BY	SVS
DATED	12/29/20
FLOW ID	-
PROJECT NO	29103
FILE NAME	1420001-00

AUTOMATED INGREDIENT SYSTEMS L.L.C.

DRAWING NO.

1420001-00