JOHNSON 10/4/10

REGULATORY STRATEGIES

1020 LADY'S LANE
ANDERSON, SC 29621

(864) 367-0481
(864) 367-0491 (FAX)

RECEIVED
SEP 28 2010
Environmental Quality Division

September 19, 2010

RB, 9/30/10

Mr. Richard Robinson, PE, Manager
Air Pollution Source Permitting Section
Environmental Quality Division
407 North Laura Street, Third Floor
Jacksonville, FL 32202

Re: Tire Centers LLC Jacksonville Facility Permit Renewal Application

Dear Mr. Richardson,

The Tire Centers LLC Jacksonville facility is submitting this permit renewal application for Permit Number 0310489-004-AO. The facility VOC emissions have been reduced significantly since the previous permit application by a process change. The facility has removed the spray booth from service and only uses dissolution for tire repair. An updated process flow diagram is enclosed as well as revised emissions calculations.

Additionally the AP-42 factors that were used to determine Haps and VOC emissions were revised by EPA in 2008. Revised calculations based on the new factors were completed and enclosed.

We would appreciate receiving an electronic version of the permit in draft so that we may comment before it is finalized.

If you should have any question, please call me at (864) 367-0481 or e-mail me at (regulatorystrategies@gmail.com).

Yours,

Ginger C. Ellis
REGULATORY STRATEGIES

cc: Tire Centers LLC

REGULATORY STRATEGIES
1020 LADYS LANE
ANDERSON, SC 29621

1027
67-219/539
BRANCH 1131

9/17/10
Date

Pay to the Order of Tax Collector, City of Jacksonville $2500.00

Two thousand five hundred and 00/100 Dollars

Security Features Details on Back.

CAROLINA FIRST

For Tire Centers LLC fees

J Dunger C Ellis

MP

⑆053902197⑆ 7100962495⑈ 1027

Harland Clarke

GUARDIAN SAFETY® BLUE

APPLICATION FOR OPERATING PERMIT RENEWAL FOR

Tire Centers, LLC

Duval County
Jacksonville, FL

RECEIVED
SEP 28 2010
Environmental Quality Division

Permit # 0310489-004-AO

September 19, 2010

PREPARED BY
REGULATORY STRATEGIES
1020 LADY'S LANE
ANDERSON SC 29621
(864) 367-0481

THIS DOCUMENT IS PRNTED ON 100% RECYCLED PAPER

Department of Environmental Protection

Division of Air Resources Management

RECEIVED
SEP 28 2010
Environmental Quality Division

APPLICATION FOR NON-TITLE V AIR PERMIT RENEWAL

See Instructions for Form No. 62-210.900(4)

I. APPLICATION INFORMATION

Identification of Facility

1. Facility Owner/Company Name: Tire Centers LLC	
2. Site Name: Tire Centers LLC Jacksonville	
3. Facility Identification Number:0310489	4. Facility Status Code: A

Application Contact

1. Name and Title of Application Contact: Ginger Ellis
2. Application Contact Mailing Address: 1020 Lady's Lane, Anderson, SC 29621 Organization/Firm: Regulatory Strategies Street Address: 1020 Lady's Lane City: Anderson State: SC Zip Code: 29621
3. Application Contact Telephone Numbers: Telephone: (864) 367-0481 Fax: ( )

Application Processing Information (DEP Use)

1. Date of Receipt of Application:	
2. Permit Number:	

Owner/Authorized Representative

1. Name and Title of Owner/Authorized Representative:
Steve Manuel
Vice President of Manufacturing

2. Owner/Authorized Representative Mailing Address: P.O. Box 218, Duncan, SC 29334

Organization/Firm: Tire Centers LLC
Street Address: 310 Inglesby Parkway
City: Duncan State: SC Zip Code: 29334

3. Owner/Authorized Representative Telephone Numbers:
Telephone: (864) 329-2700 Fax: ( )

4. Owner/Authorized Representative Statement:

I, the undersigned, am the owner or authorized representative of the facility addressed in this Application for Air Permit. I hereby certify, based on information and belief formed after reasonable inquiry, that the statements made in this application are true, accurate and complete and that, to the best of my knowledge, any estimates of emissions reported in this application are based upon reasonable techniques for calculating emissions. Further, I agree to operate and maintain the air pollutant emissions units and air pollution control equipment described in this application so as to comply with all applicable standards for control of air pollutant emissions found in the statutes of the State of Florida and rules of the Department of Environmental Protection and revisions thereof. I understand that a permit, if granted by the Department, cannot be transferred without authorization from the Department, and I will promptly notify the Department upon sale or legal transfer of any permitted emissions unit.*

Signature

9//20/2010
Date

* Attach letter of authorization if not currently on file.

Scope of Application

Emissions Unit ID	Description of Emissions Unit	Permit Type	Processing Fee
EU001	Two Tire Grinding Machines	AF2B	$1000
EU002	Dissolution Application & Repair Stations	AF2C	$750
EU003	Tire Curing Process	AF2C	$750

Application Processing Fee

Check one: [x] Attached - Amount: $_____2500_____ [ ] Not Applicable

Application Comment

EU002 process has changed. The spray booth has been removed from the process and VOC emissions have been significantly reduced. See calculations.

Additionally the AP-42 factors for Rubber Tire Manufacturing were revised in 2008. The new factors were used in performing the calculations for this renewal application.

II. FACILITY INFORMATION

Facility Contact

1. Name and Title of Facility Contact: Brad Sutek
2. Facility Contact Mailing Address: 5700 Commonwealth Avenue Organization/Firm: Tire Centers LLC Street Address: 5700 Commonwealth Avenue City: Jacksonville State: FL Zip Code: 32205
3. Facility Contact Telephone Numbers: Telephone: (904) 781-8392 Fax: ( )

Facility Supplemental Requirements

1. Area Map Showing Facility Location: [ ] Attached, Document ID:_____ [x] Not Applicable [ ] Waiver Requested
2. Facility Plot Plan: [ ] Attached, Document ID:_____ [x] Not Applicable [ ] Waiver Requested
3. Process Flow Diagram(s): [x] Attached, Document ID:_01__ [ ] Not Applicable [ ] Waiver Requested
4. Precautions to Prevent Emissions of Unconfined Particulate Matter: [ ] Attached, Document ID:_____ [x] Not Applicable [ ] Waiver Requested

Facility Comment

An area map and facility plot plan were submitted with the initial application and are on file with the Agency. A revised process flow diagram is enclosed.

Emissions Unit ID EU001

III. EMISSIONS UNIT INFORMATION

A separate Emissions Unit Information Section must be completed for each emissions unit addressed in this Application for Non-Title V Air Permit Renewal. If submitting the form in hard copy, indicate, in the space provided at the top of each page, the Emissions Unit ID of the emissions unit addressed on the page, as given in the unit's most current air operation permit.

Emissions Unit Description and Status

1. Description of Emissions Unit Addressed in This Section (limit to 60 characters): Two Tire Grinding Machines (two identical machines: EP1a and EP1b)	
2. Emissions Unit Status Code: A	3. Long-Term Reserve Shutdown Date:
4. Control Equipment Method/Description (limit to 200 characters per device or method): 2 single cyclone separators 2500 dscfm each	

Emissions Unit Operating Capacity and Schedule

1. Maximum Heat Input Rate: na		mmBtu/hr
2. Maximum Incineration Rate: na	lb/hr	tons/day
3. Maximum Process or Throughput Rate: 273,750 tires/yr		
4. Maximum Production Rate: na		
5. Requested Maximum Operating Schedule:	24 hours/day	7 days/week
	52 weeks/year	8760 hours/year

Emissions Unit ID EU001_

Emissions Unit Supplemental Requirements

1. Fuel Analysis or Specification			
[ ] Attached, Document ID:_____	[x] Not Applicable	[ ] Waiver Requested	
2. Compliance Test Report			
[ ] Attached, Document ID:_____		[x] Not Applicable	
[ ] Previously submitted, Date:_____			
3. Procedures for Startup and Shutdown			
[ ] Attached, Document ID:_____	[x] Not Applicable	[ ] Waiver Requested	
4. Operation and Maintenance Plan			
[ ] Attached, Document ID:_____	[x] Not Applicable	[ ] Waiver Requested	
5. Other Information Required by Rule or Statute			
[ ] Attached, Document ID:_____		[x] Not Applicable	

Emissions Unit Comment

The AP-42 emissions factors for HAPs were revised in 2008. Therefore the calculations for this unit were revised and enclosed.

Emissions Unit ID EU002

III. EMISSIONS UNIT INFORMATION

A separate Emissions Unit Information Section must be completed for each emissions unit addressed in this Application for Non-Title V Air Permit Renewal. If submitting the form in hard copy, indicate, in the space provided at the top of each page, the Emissions Unit ID of the emissions unit addressed on the page, as given in the unit's most current air operation permit.

Emissions Unit Description and Status

1. Description of Emissions Unit Addressed in This Section (limit to 60 characters): Dissolution Application & Repair	
2. Emissions Unit Status Code: A	3. Long-Term Reserve Shutdown Date:
4. Control Equipment Method/Description (limit to 200 characters per device or method): na	

Emissions Unit Operating Capacity and Schedule

1. Maximum Heat Input Rate: na		mmBtu/hr
2. Maximum Incineration Rate: na	lb/hr	tons/day
3. Maximum Process or Throughput Rate: 273,750 tires/year (6.7 tons VOC/yr)		
4. Maximum Production Rate		
5. Requested Maximum Operating Schedule:		
	24 hours/day	7 days/week
	52 weeks/year	8760 hours/year

Emissions Unit ID__EU002_

Emissions Unit Supplemental Requirements

1. Fuel Analysis or Specification [ ] Attached, Document ID:_____ [x] Not Applicable [ ] Waiver Requested	
2. Compliance Test Report [ ] Attached, Document ID:_____ [x] Not Applicable [ ] Previously submitted, Date:_____	
3. Procedures for Startup and Shutdown [ ] Attached, Document ID:_____ [x] Not Applicable [ ] Waiver Requested	
4. Operation and Maintenance Plan [ ] Attached, Document ID:_____ [x] Not Applicable [ ] Waiver Requested	
5. Other Information Required by Rule or Statute [ ] Attached, Document ID: _____ [x] Not Applicable	

Emissions Unit Comment

The process has changed. The spray booth has been removed from service. As such, the VOC PTE has been reduced to 6.7 tpy. This was possible because the facility reduced the dissolution application rate from 125 grams per tire to only 25 grams per tire. In the old process the entire carcass was sprayed with dissolution. In the current process, repair rubber is packed into the repair areas. Dissolution (heptane and rubber mixture) is applied by hand to the repair area to help the repair rubber bond to the carcass. Patching involves the application of a patch to the interior of the tire and is very much like applying a patch to an inner tube, in that it assures that the tire will hold air and not go flat. After any necessary repairs, dissolution may be applied by hand to the carcass to refresh it prior to receiving new tread. Heptane (VOC) is emitted from this process. Calculations were revised and enclosed.

Emissions Unit ID EU003

III. EMISSIONS UNIT INFORMATION

A separate Emissions Unit Information Section must be completed for each emissions unit addressed in this Application for Non-Title V Air Permit Renewal. If submitting the form in hard copy, indicate, in the space provided at the top of each page, the Emissions Unit ID of the emissions unit addressed on the page, as given in the unit's most current air operation permit.

Emissions Unit Description and Status

1. Description of Emissions Unit Addressed in This Section (limit to 60 characters): Tire Curing Process	
2. Emissions Unit Status Code: A	3. Long-Term Reserve Shutdown Date:
4. Control Equipment Method/Description (limit to 200 characters per device or method): na	

Emissions Unit Operating Capacity and Schedule

1. Maximum Heat Input Rate: na		mmBtu/hr
2. Maximum Incineration Rate: na	lb/hr	tons/day
3. Maximum Process or Throughput Rate: 273, 750 tires/yr		
4. Maximum Production Rate:		
5. Requested Maximum Operating Schedule:		
	24 hours/day	7 days/week
	52 weeks/year	8760 hours/year

Emissions Unit ID___EU003_

Emissions Unit Supplemental Requirements

1. Fuel Analysis or Specification [ ] Attached, Document ID:_____ [x] Not Applicable [ ] Waiver Requested	
2. Compliance Test Report [ ] Attached, Document ID:_____ [x] Not Applicable [ ] Previously submitted, Date:_____	
3. Procedures for Startup and Shutdown [ ] Attached, Document ID:_____ [x] Not Applicable [ ] Waiver Requested	
4. Operation and Maintenance Plan [ ] Attached, Document ID:_____ [x] Not Applicable [ ] Waiver Requested	
5. Other Information Required by Rule or Statute [ ] Attached, Document ID:_____ [x] Not Applicable	

Emissions Unit Comment

The AP-42 emissions factors for HAPs were revised in 2008. Therefore the calculations for this unit were revised and enclosed.

ID 01

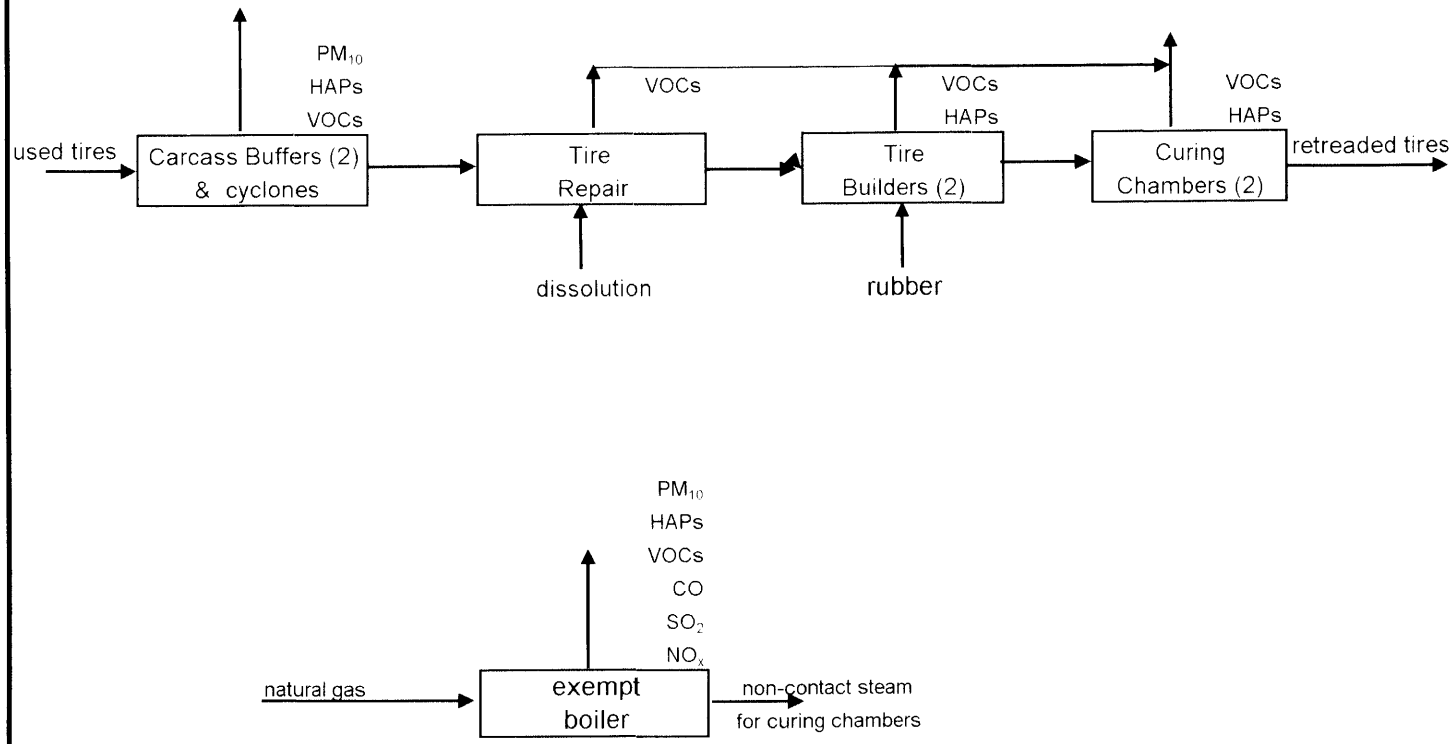
PM10
HAPs
VOCs
used tires
Carcass Buffers (2) & cyclones
VOCs
Tire Repair
dissolution
VOCs
HAPs
Tire Builders (2)
rubber
VOCs
HAPs
Curing Chambers (2)
retreaded tires
PM10
HAPs
VOCs
CO
SO2
NOx
natural gas
exempt boiler
non-contact steam
for curing chambers

Pollutants Summary for theRetread Facility

Pollutant	EU001 Tire Grinding (tpy)	EU002 Rubber Solution Application (tpy)	EU003 Tire Building (tpy)	EU003 Curing (tpy)	Exempt Natural Gas Boiler (tpy)	**Total (tpy)**
HAPs	0.21	none	0.02	0.46		**0.7**
CO						**0.0**
NO_x						**0.0**
SO_2						**0.000**
TSP	6.57					**6.6**
PM_{10}	0.66					**0.7**
VOC	0.86	6.67	0.006	1.33		**8.9**
Pb	0.0033					**0.003**

EU001 PM From Carcass Grinding Operation

TSP from Tire Buffing with Interlocked Closed Loop Rubber Recovery System

	273750	retreaded tires/yr buffed
x	12	lbs/tire rubber ground off (process study)
/	2000	lbs/s.ton
x	1.00E+00	lbs PM/lb rubber ground off (AP-42)
x	0.4%	based on a 99.6 - 99.8% control eff. determined from cyclone stack tests at other sites
	6.6	s.ton/yr PM emitted from the buffing of truck tire carcasses
	36.0	lbs/day
	1.5	lbs/hr

Particle analysis of a sample of rubber from the Michelin Retread Technologies Process, indicated less than 1% of the material was PM_{10}. For emissions esitmates, assumed 10%. A copy of the analysis will be provided upon request

PM_{10} from Tire Buffing with Interlocked Closed Loop Rubber Recovery System

	273750	retreaded tires/yr buffed
x	12	lbs/tire rubber ground off (process study)
/	2000	lbs/s.ton
x	1.00E+00	lbs PM/lb rubber ground off (AP-42)
	10%	PM_{10}
x	0.4%	based on a 99.6 - 99.8% control eff. determined from cyclone stack tests at other sites
	0.66	s.ton/yr PM emitted from the buffing of truck tire carcasses
	3.6	lbs/day
	0.2	lbs/hr

Total VOC Emissions Summary for Pre-Cure Retread Facility

EU001 VOCs From Carcass Grinding

	273750	retread tires/yr
x	5.21E-04	lb VOCs/lb rubber ground off (AP42 Section 4.12 Grinding Operations Carcass Emission Factors)
x	12.0	lbs/tire rubber ground off
/	2000	lbs/ton
	0.856	s.tons/yr VOCs

EU002 VOCs From Rubber Solution Application & Repair

	273750	retread tires/yr
x	25	grams/tire dissolution (based on process studies)
x	454	grams/lb
x	88.5%	VOC content as heptane (88-88.5% VOC)
/	2000	lbs/s.ton
	6.670	s.ton/yr VOCs

EU003 VOCs From Extruding Pre-cure Tread Building

	273750	retread tires/yr
x	3.3	lbs
x	1.23E-05	lb VOCs/lb rubber (AP42 Section 4.12 Extruder Emission Factors)
/	2000	lbs/ton
	0.006	s.tons/yr VOCs

EU003 VOCs From Pre-cure Curing

	273750	retread tires/yr
x	140.7	lbs previously cured rubber in the tire
x	3.10E-04	lbs VOCs/lb rubber cured (AP42 Section 4.12 Tire Cure Emission Factors)
x	20%	80% reduction in emissions due pre-cured rubber
+	273750	retread tires/day
x	3.3	lbs uncured rubber/tire
x	3.10E-04	lbs VOCs/lb rubber cured (AP42 Table 4.12-11 Curing Emission Factors)
	2,667.933	lbs VOC/yr
/	2,000	lbs/ton
	1.334	s. tons VOC/yr

Total VOCs Emissions for the Facility	
0.856	s.ton/yr VOCs for grinding retread tires
6.670	s.tons/yr total VOCs from rubber dissolution usage
0.006	s.ton/yr VOCs from extruding pre-cure retread tires
1.334	s.ton/yr VOCs from curing pre-cure retread tires
8.9	**s.tons/yr total VOCs**

Total HAPs Emissions Summary for Pre-cure Retread Facility

EU001 HAPs From Tire Buffing

	273750	retread tires/yr
x	1.27E-04	lb HAPs/lb rubber ground off (AP42 Section 4.12 Grinding Operatons Carcass Emission Factors)
x	12.0	lbs/tire rubber ground off (process study)
/	2000	lbs/ton
	0.2086	s.tons/yr HAPs

EU002 HAPs From Rubber Solution Application & Repair

NONE

EU003 HAPs From Extruding Pre-cure Tire Building

	273750	retread tires/yr
x	3.3	lbs
x	3.52E-05	lb HAPs/lb rubber (AP42 Section 4.12 Extruder Emission Factors)
/	2000	lbs/ton
	0.016	s.tons/yr HAPs for retread tires

EU003 HAPs From Pre-cure Curing

	273750	retread tires/yr
x	140.7	lbs previously cured rubber in the tire
x	1.06E-04	lbs VOCs/lb rubber cured (AP42 Section 4.12 Tire Cure Emission Factors)
x	20%	80% reduction in emissions due pre-cured rubber
+	273750	retread tires/day
x	3.3	lbs uncured rubber/tire
x	1.06E-04	lbs VOCs/lb rubber cured (AP42 Section 4.12 Tire Cure Emission Factors)
	912.078	lbs VOC/day
/	2,000	lbs/ton
	0.456	s. tons VOC/yr

Total HAPs Emissions for the Facility	
0.209	s.ton/yr HAPs from grinding retread tires
0.016	s.ton/yr HAPs from extruding pre-cure retread tires
0.456	s.ton/yr HAPs from curing pre-cure retread tires
0.68	**s.tons/yr total HAPs**

Speciated HAPs Summary for the Facility

Analyte Name	CAS #	EU001 Carcass Grinding lbs/yr	EU003 Tread Building-Extruding lbs/yr	EU003 Curing lbs/yr	Total lbs/hr	Total lbs/day	Total lbs/yr
Acetonitrile	75-05-8		0.198		0.00002	0.00054	0.198
Acetophenone	98-86-2	2.342	3.005	37.523	0.00463	0.11104	40.528
Acrolein	107-02-8	5.519	0.281	4.114	0.00050	0.01204	4.395
Aniline	62-53-3	64.715	0.460	0.380	0.00010	0.00230	0.841
Benzene	71-43-2	13.567	0.243	0.584	0.00009	0.00227	0.827
Benzyl chloride	100-44-7			5.095	0.00058	0.01396	5.095
Biphenyl	92-52-4		0.015	113.602	0.01297	0.31128	113.618
Bromomethane (methyl bromide)	74-83-9			13.340	0.00152	0.03655	13.340
1,3-Butadiene	106-99-0	87.053	0.458		0.00005	0.00126	0.458
~~2-Butanone (methyl ethyl ketone)~~ delisted by EPA 12 15 05	~~78-93-3~~	~~1.685~~	~~0.122~~	~~2.616~~	~~0.00031~~	~~0.00750~~	~~2.738~~
Cadmium compounds		2.819			0.00000	0.00000	0.000
Carbon disulfide	75-15-0	8.475	0.241	0.011	0.00003	0.00069	0.252
Carbonyl sulfide	463-58-1	28.580		0.187	0.00002	0.00051	0.187
2-Chloroacetophenone	532-27-4		0.006	0.077	0.00001	0.00023	0.083
Chloroform	67-66-3			0.796	0.00009	0.00218	0.796
Chloromethane (methyl chloride)	74-87-3		0.064	0.084	0.00002	0.00041	0.148
Chromium Compounds		4.730	0.222		0.00003	0.00061	0.222
Hexavalent Chromium		not detected	not detected		0.00000	0.00000	0.000
Cobalt compounds			0.017		0.00000	0.00005	0.017
Cumene	98-82-8		0.123	1.773	0.00022	0.00519	1.896
Dibenzofuran	132-64-9	0.522	0.003	8.167	0.00093	0.02238	8.171
1,2-Dibromo-3-Chloropropane	96-12-8			5.844	0.00067	0.01601	5.844
Di-n-butylphthalate	84-74-2	7.358	0.179	0.826	0.00011	0.00275	1.005
1,4-Dichlorobenzene	106-46-7		0.008	116.184	0.01326	0.31833	116.192
1,1-Dichloroethene (1,1-dichloroethylene) (vinylidine chloride)	75-35-4			289.169	0.03301	0.79225	289.169
1,1-Dichloroethane (ethylidine chloride)	75-34-3			51.379	0.00587	0.14076	51.379
N,N-Diethylaniline	121-69-7		0.005		0.00000	0.00001	0.005
Dimethylphthalate	131-11-3		0.004	0.685	0.00008	0.00189	0.689
Ethylbenzene	100-41-4		0.073	116.184	0.01327	0.31851	116.258
bis(2-Ethylhexyl)phthalate	117-81-7	26.083	0.176	4.682	0.00055	0.01331	4.858
2-Furaldehyde	98-01-1			0.317	0.00004	0.00087	0.317
Hexachlorobutadiene	87-68-3			0.177	0.00002	0.00049	0.177
Hexane	110-54-3	52.560	0.357	0.787	0.00013	0.00313	1.144
Isooctane	540-84-1	35.807	0.041		0.00000	0.00011	0.041
Isophorone	78-59-1		0.032	2.074	0.00024	0.00577	2.106
Lead Compounds		6.636			0.00000	0.00000	0.000
Methylene Chloride (dichloromethane)	75-09-2	0.821	11.932	3.993	0.00182	0.04363	15.925
4-Methyl-2-Pentanone (Methyl Isobutyl Ketone)	108-10-1	63.072	5.014	48.367	0.00609	0.14625	53.381
2-Methylphenol (o-cresol)	95-48-7			4.088	0.00047	0.01120	4.088
Naphthalene	91-20-3	1.909	0.179	34.253	0.00393	0.09433	34.432
Nickel Compounds		6.669	0.180		0.00002	0.00049	0.180
Phenol	108-95-2	5.453	0.282	0.886	0.00013	0.00320	1.168
Propylene oxide	75-56-9		1.587		0.00018	0.00435	1.587
Styrene	100-42-5		0.656	1.833	0.00028	0.00682	2.489
t-Butyl Methyl Ether (methyl tert-butyl ether)	1634-04-4			1.730	0.00020	0.00474	1.730
1,1,2,2-Tetrachloroethane	79-34-5			142.003	0.01621	0.38905	142.003
Tetrachloroethene (tetrachloroethylene) (perchloroethylene)	127-18-4		0.048	0.869	0.00010	0.00251	0.917
Toluene	108-88-3	20.696	8.381	0.022	0.00096	0.02302	8.403
o-Toluidine	95-53-4	8.377	0.135	0.869	0.00011	0.00275	1.005
1,2,4-Trichlorobenzene	120-82-1			0.022	0.00000	0.00006	0.022
1,1,1-Trichloroethane (methyl chloroform)	71-55-6	1.176	0.085	113.602	0.01298	0.31147	113.687
Trichloroethylene (Trichloroethene)	79-01-6	6.406		75.218			
m-Xylene + p-Xylene	1330-20-7	7.326	0.301	289.169	0.03304	0.79307	289.470
o-Xylene	95-47-6		0.234	75.218	0.00861	0.20672	75.452

468.671 1526.195

EU001 Tire Buffing VOC & HAP Emissions
AP42 Section 4.12 Carcass Grinding Emission Factors for Rubber Manufacturing Industry

Truck Tires Ground for Retreading: 273750 tires/yr

Amount Rubber Ground Off: 12.0 lbs/tire
Total Amount Rubber Ground Off: 3,285,000 lbs/yr

Analyte Name	CAS #	Carcass lb/lb rubber removed	Emissions lbs/year	
Total VOC		5.21E-04	1711	
Total HAPs		1.27E-04	417.2	
1,1,1-Trichloroethane (Methyl	71-55-6	3.58E-07	1.176	
1,3-Butadiene	106-99-0	2.65E-05	87.053	
~~2-Butanone (methyl ethyl ketone)~~ delisted by EPA 12/15/05	78-93-3	5.13E-07	1.685	
4-Methyl-2-pentanone	108-10-1	1.92E-05	63.072	
Acetophenone	98-86-2	7.13E-07	2.342	
Acrolein	107-02-8	1.68E-06	5.519	
Aniline	62-53-3	1.97E-05	64.715	
Benzene	71-43-2	4.13E-06	13.567	
bis(2-Ethylhexyl)Phthalate	117-81-7	7.94E-06	26.083	
Cadmium (Cd) Compounds		8.58E-07	2.819	
Carbon Disulfide	75-15-0	2.58E-06	8.475	
Carbonyl Sulfide	463-58-1	8.70E-06	28.580	
Chromium (Cr) Compounds		1.44E-06	4.730	see note 1
Di-n-butylphthalate	84-74-2	2.24E-06	7.358	
Dibenzofuran	132-64-9	1.59E-07	0.522	
Hexane	110-54-3	1.60E-05	52.560	
Isooctane	540-84-1	1.09E-05	35.807	
Lead (Pb) Compounds		2.02E-06	6.636	
m-Xylene + p-Xylene		2.23E-06	7.326	
Methylene Chloride	75-09-2	2.50E-07	0.821	
Naphthalene	91-20-3	5.81E-07	1.909	
Nickel (Ni) Compounds		2.03E-06	6.669	
o-Toluidine	95-53-4	2.55E-06	8.377	
Phenol	108-95-2	1.66E-06	5.453	
Toluene	108-88-3	6.30E-06	20.696	
Trichloroethene	79-01-6	1.95E-06	6.406	

1. Value represents total chromium. Michelin grindings were analyzed for the presence of hexavalent chromium. Hexavalent chromium was not detected.

468.671

EU003 Pre-cure Tread Building VOC & HAP Emissions
AP42 Section 4.12 Extruder Emission Factors for Rubber Manufacturing Industry

Maximum Capacity: Pre-cure: 273750 tires/yr

Green Rubber Weight: 3.3 lbs/tire

Rubber Compounds Extruded: 905,428 lbs/yr

Analyte Name	CAS #	Cmpd #4 lb/lb rubber	Cmpd #6 lb/lb rubber	Max Emission Factor lb/lb rubber	Extrusion Calculated Emissions lb/yr
Total VOC		5.67E-06	1.23E-05	1.23E-05	11.12
Total HAPs		1.03E-05	3.52E-05	3.52E-05	31.89
1,1,1-Trichloroethane (methyl chloroform)	71-55-6	8.47E-08	9.37E-08	9.37E-08	0.08
1,3-Butadiene	106-99-0	8.92E-08	5.06E-07	5.06E-07	0.46
1,4-Dichlorobenzene	106-46-7	8.36E-09		8.36E-09	0.008
~~2-Butanone (methyl ethyl ketone)~~ delisted by EPA 12/15/05	78-93-3	1.34E-07	1.17E-07	1.34E-07	0.122
2-Chloroacetophenone	532-27-4	6.48E-09	1.68E-09	6.48E-09	0.006
4-Methyl-2-Pentanone	108-10-1	5.54E-06	2.66E-06	5.54E-06	5.014
Acetonitrile	75-05-8	1.09E-07	2.19E-07	2.19E-07	0.198
Acetophenone	98-86-2	3.65E-08	3.32E-06	3.32E-06	3.005
Acrolein	107-02-8	2.03E-07	3.10E-07	3.10E-07	0.281
Aniline	62-53-3	5.08E-07	2.19E-07	5.08E-07	0.460
Benzene	71-43-2	4.46E-08	2.69E-07	2.69E-07	0.243
Biphenyl	92-52-4	4.65E-09	1.68E-08	1.68E-08	0.015
bis(2-Ethylhexyl)phthalate	117-81-7	1.94E-07	1.13E-07	1.94E-07	0.176
Carbon Disulfide	75-15-0	1.09E-07	2.66E-07	2.66E-07	0.241
Chloromethane	74-87-3	7.06E-08	6.64E-08	7.06E-08	0.064
Chromium (Cr) Compounds[1]		2.45E-07	2.25E-08	2.45E-07	0.222
Cobalt (Co) Compounds		1.90E-08	9.92E-09	1.90E-08	0.017
Cumene	98-82-8	3.66E-08	1.36E-07	1.36E-07	0.123
Di-n-butylphthalate	84-74-2	1.87E-07	1.98E-07	1.98E-07	0.179
Dibenzofuran	132-64-9	3.52E-09	3.24E-09	3.52E-09	0.003
Dimethylphthalate	131-11-3		4.27E-09	4.27E-09	0.004
Ethylbenzene	100-41-4	3.30E-08	8.10E-08	8.10E-08	0.073
Hexane	110-54-3	1.02E-07	3.94E-07	3.94E-07	0.357
Isooctane	540-84-1	3.81E-08	4.51E-08	4.51E-08	0.041
Isophorone	78-59-1	3.50E-08		3.50E-08	0.032
m-Xylene + p-Xylene		7.01E-08	3.32E-07	3.32E-07	0.301
Methylene Chloride	75-09-2	1.60E-06	1.32E-05	1.32E-05	11.932
N,N-Diethylaniline	121-69-7	5.45E-09		5.45E-09	0.005
Naphthalene	91-20-3	1.08E-07	1.98E-07	1.98E-07	0.179
Nickel (Ni) Compounds		1.99E-07	7.24E-08	1.99E-07	0.180
o-Toluidine	95-53-4		1.50E-07	1.50E-07	0.135
o-Xylene	95-47-6	3.49E-08	2.58E-07	2.58E-07	0.234
Phenol	108-95-2	3.11E-07	1.84E-07	3.11E-07	0.282
Propylene Oxide	75-56-9		1.75E-06	1.75E-06	1.587
Styrene	100-42-5	9.61E-09	7.25E-07	7.25E-07	0.656
Tetrachloroethene (Perchloroethylene)	127-18-4	5.32E-08	4.44E-08	5.32E-08	0.048
Toluene	108-88-3	1.07E-07	9.26E-06	9.26E-06	8.381

1. Results are for total chromium. Actual tread was tested for hexavalent chromium. It was not detected.

EU003 Pre-mold Tire Curing VOC & HAP Emissions
AP42 Section 4.12 Tire Cure Factors for Rubber Manufacturing Industry

Maximum Capacity: Pre-cure: 273750 tires yr

Green Rubber Weight: 3.3 lbs tire
140.7 previously cured rubber weight
20% 80% reduction in emissions due to pre-cured rubber

Apportioned Cured Rubber: 8,606,235 lbs rubber yr

Analyte Name	CAS #	OEM 205/70 lb/lb rubber	High Performance 205/70 lb/lb rubber	OEM 195/75 lb/lb rubber	Replacement 195/75 lb/lb rubber	Max Emission Factor lb/lb rubber	Curing Calculated Emissions lb/yr
Total VOC		1.80E-04	2.11E-04	3.10E-04	1.94E-04	3.10E-04	2667.93
Total HAPs		8.59E-05	1.06E-04	8.53E-05	5.43E-05	1.06E-04	912.26
Acetophenone	98-86-2	1.08E-07	1.07E-07	1.04E-07	1.20E-07	1.20E-07	1.033
Acrolein	107-02-8				1.28E-07	1.28E-07	1.102
Aniline	62-53-3	4.36E-06	5.29E-07	3.73E-06	3.57E-06	4.36E-06	37.523
Benzene	71-43-2	3.51E-07	4.78E-07	2.01E-07	2.41E-07	4.78E-07	4.114
Benzyl Chloride	100-44-7	4.42E-08				4.42E-08	0.380
Biphenyl	92-52-4		5.41E-08	6.78E-08	3.97E-08	6.78E-08	0.584
bis(2-Ethylhexyl)phthalate	117-81-7		7.00E-09	6.89E-08	5.92E-07	5.92E-07	5.095
Carbon Disulfide	75-15-0	4.92E-07	6.86E-06	1.32E-05	4.60E-06	1.32E-05	113.602
Carbonyl Sulfide	463-58-1			5.44E-07		5.44E-07	4.682
2-Chloroacetophenone	532-27-4		1.29E-09			1.29E-09	0.011
Chloroform	67-66-3		2.17E-08			2.17E-08	0.187
2-Methylphenol (o-cresol)	95-48-7		9.00E-09	5.42E-09	6.63E-09	9.00E-09	0.077
Chloromethane (methyl chloride)	74-87-3	4.92E-08	6.49E-08	9.25E-08	4.70E-08	9.25E-08	0.796
Cumene	98-82-8		4.75E-07	2.28E-07	1.36E-07	4.75E-07	4.088
Dibenzofuran	132-64-9		5.84E-09	9.11E-09	9.81E-09	9.81E-09	0.084
1,2-Dibromo-3-Chloropropane	96-12-8			2.06E-07		2.06E-07	1.773
Di-n-butylphthalate	84-74-2	9.49E-07	2.88E-07	1.97E-07	4.52E-07	9.49E-07	8.167
1,4-Dichlorobenzene	106-46-7	6.79E-07	1.89E-09	2.49E-09	6.80E-09	6.79E-07	5.844
Dimethylphthalate	131-11-3	4.06E-09	9.60E-08	7.36E-09	2.09E-08	9.60E-08	0.826
Ethylbenzene	100-41-4	1.03E-05	1.35E-05	8.55E-06	3.70E-06	1.35E-05	116.184
1,1-Dichloroethane (ethylidine chloride)	75-34-3	7.96E-08				7.96E-08	0.685
Hexane	110-54-3	3.04E-06	5.97E-06	6.62E-07	1.58E-06	5.97E-06	51.379
Isophorone	78-59-1	4.37E-09	2.06E-08	4.54E-09	7.62E-09	2.06E-08	0.177
Bromomethane (methyl bromide)	74-83-9			9.15E-08		9.15E-08	0.787
1,1,1-Trichloroethane (methyl chloroform)	71-55-6	1.19E-07	2.41E-07	3.96E-08	9.27E-08	2.41E-07	2.074
2-Butanone (methyl ethyl ketone)	78-93-3	1.55E-06	1.10E-06	6.35E-07	5.37E-07	1.55E-06	13.340
4-Methyl-2-Pentanone (methyl isobutyl ketone)	108-10-1	9.60E-06	1.29E-05	1.32E-05	1.26E-05	1.32E-05	113.602
t-Butyl Methyl Ether (methyl tert butyl ether)	1634-04-4	3.04E-07				3.04E-07	2.616
Methylene Chloride	75-09-2	5.62E-06	2.87E-06	4.21E-06	2.18E-06	5.62E-06	48.367
Naphthalene	91-20-3		2.01E-07	1.76E-07	1.24E-07	2.01E-07	1.730
Phenol	108-95-2	1.30E-07	4.64E-07	3.89E-08	3.87E-07	4.64E-07	3.993
Styrene	100-42-5	3.98E-06	6.83E-07	3.39E-07	4.71E-07	3.98E-06	34.253
1,1,2,2-Tetrachloroethane	79-34-5			1.03E-07		1.03E-07	0.886
Tetrachloroethene (perchloroethylene)	127-18-4	2.13E-07	9.56E-08	3.83E-08		2.13E-07	1.833
Toluene	108-88-3	1.22E-05	1.65E-05	9.47E-06	6.88E-06	1.65E-05	142.003
o-Toluidine	95-53-4	7.21E-09	5.45E-08	9.12E-08	1.01E-07	1.01E-07	0.869
1,2,4-Trichlorobenzene	120-82-1				2.59E-09	2.59E-09	0.022
o-Xylene	95-47-6	7.73E-06	8.74E-06	6.09E-06	3.06E-06	8.74E-06	75.218
m-Xylene + p-Xylene		2.34E-05	3.36E-05	2.27E-05	1.26E-05	3.36E-05	289.169
1,1-Dichloroethene (1,1-dichloroethylene) (vinylidine dichloride)	75-35-4	5.85E-07				5.85E-07	5.035
Trichloroethene	79-01-6				3.68E-08	3.68E-08	0.317