TECHNICAL EVALUATION
&
PRELIMINARY DETERMINATION

APPLICANT

Duke Energy Florida (DEF), Inc.
299 First Avenue, North
St. Petersburg, Florida 33701

Crystal River Energy Complex
Facility ID No. 0170004

PROJECT

Project No. 0170004-044-AC
Hydrated Lime and Activated Carbon Injection Systems
Crystal Units 1 and 2

COUNTY

Citrus County, Florida

PERMITTING AUTHORITY

Florida Department of Environmental Protection
Division of Air Resource Management
Office of Permitting and Compliance
2600 Blair Stone Road, MS#5505
Tallahassee, Florida 32399-2400

April 25, 2014

1. GENERAL PROJECT INFORMATION

1.1. Air Pollution Regulations

Projects at stationary sources with the potential to emit air pollution are subject to the applicable environmental laws specified in Section 403 of the Florida Statutes (F.S.). The statutes authorize the Department of Environmental Protection (Department) to establish regulations regarding air quality as part of the Florida Administrative Code (F.A.C.), which includes the following applicable chapters: 62-4 (Permits); 62-204 (Air Pollution Control – General Provisions); 62-210 (Stationary Sources – General Requirements); 62-212 (Stationary Sources – Preconstruction Review); 62-213 (Operation Permits for Major Sources of Air Pollution); 62-296 (Stationary Sources - Emission Standards); and 62-297 (Stationary Sources – Emissions Monitoring). Specifically, air construction permits are required pursuant to Chapters 62-4, 62-210 and 62-212, F.A.C.

In addition, the U. S. Environmental Protection Agency (EPA) establishes air quality regulations in Title 40 of the Code of Federal Regulations (CFR). Part 60 specifies New Source Performance Standards (NSPS) for numerous industrial categories. Part 61 specifies National Emission Standards for Hazardous Air Pollutants (NESHAP) based on specific pollutants. Part 63 specifies NESHAP based on the Maximum Achievable Control Technology (MACT) for numerous industrial categories. The Department adopts these federal regulations in Rule 62-204.800, F.A.C.

1.2. Facility Description and Location

The Duke Energy Crystal River Energy Complex is an existing power plant, which is categorized under Standard Industrial Classification Code No. 4911. Refer to **Figure 1** and **Figure** 2. The existing Crystal River Power Plant is located in Citrus County at 15760 West Power Line Street in Crystal River, Florida.

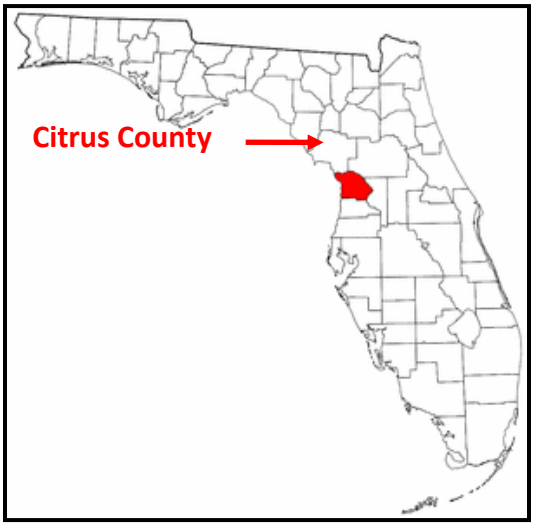

Figure 1 - Citrus County, Florida.

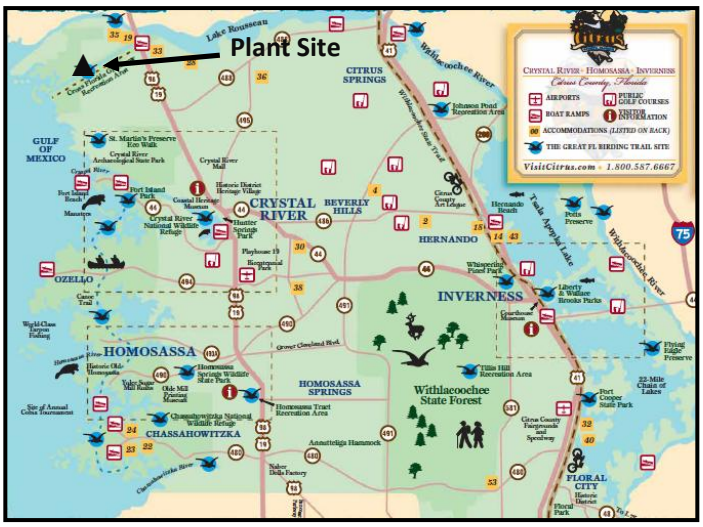

Figure 2 - Location of Crystal River Energy Complex.

The UTM coordinates of the existing facility are Zone 17, 334.3 km East and 3204.5 km North. This site is in an area that is in attainment (or designated as unclassifiable) for all air pollutants subject to Ambient Air Quality Standards (AAQS).

Table 1 is a summary of Emissions Units (E.U.) from the Facility Title V Air Operation Permit 0170004-043-AV. Crystal River (CR) Units 1 and 2 are the subject of the present permit application. Units 1 and 2 are tangentially-fired, dry bottom pulverized coal-fueled boilers with gross capacity ratings of 440.5 and 523.8 megawatts (MW), respectively. The units commenced commercial operation in 1966 and 1969, respectively.

Table 1 - Summary of Emissions Units.

E.U. No.	Brief Description
Regulated Emission Units	
001	Fossil Fuel Steam Generator, Unit 1
002	Fossil Fuel Steam Generator, Unit 2
003	Fossil Fuel Steam Generator, Unit 5
004	Fossil Fuel Steam Generator, Unit 4
006	Fly ash transfer (Source 1) from Unit 1
008	Fly ash storage silo (Source 3) for Units 1 and 2
009	Fly ash transfer (Source 4) from Unit 2
010	Fly ash transfer (Source 5) from Unit 2
012	Relocatable diesel generators
013	Cooling towers for Units 1, 2, and 3
014	Bottom ash storage silo for Units 1 and 2
015	Cooling towers for Units 4 and 5
016	Material handling activities for coal-fired steam units
020	Portable Cooling Towers for Units 1 and 2
023	Limestone and Gypsum Material Handling Activities
028	3500 kW diesel generator associated with Unit 3
029	Diesel fire pump, south yard
030	Emergency generator (meteorological weather station)
033	Portable Concrete Batch Plant
Unregulated Emissions Units and/or Activities	
017	Fuel and lube oil tanks and vents
018	Sewage treatment, water treatment, lime storage
019	Two 3500 kW diesel generators associated with Unit 3

Unit 1 is equipped with a 499 foot stack and Unit 2 has a 502 foot stack. Each has an electrostatic precipitator (ESP) to control particulate matter (PM) and Low NO_X burners to control nitrogen oxides (NO_X). Each is equipped with Continuous emissions monitoring systems (CEMS) to measure and record NO_X and sulfur dioxide (SO_2) emissions and a continuous opacity monitoring system (COMS) to measure and record the opacity of the exhaust gas.

1.3. Facility Regulatory Categories

- The facility is a major source of hazardous air pollutants (HAP).
- The facility operates units subject to the acid rain provisions of the Clean Air Act.
- The facility is a Title V major source of air pollution in accordance with Chapter 62-213, F.A.C.
- The facility is a major stationary source in accordance with Rule 62-212.400, F.A.C. for the Prevention of Significant Deterioration (PSD) of Air Quality.

1.4. Application

On March 27, 2014, Duke Energy Florida submitted an air construction permit application for CR Units 1 and 2. Link to Application

The application is for a minor source air construction permit for the permanent operation of a hydrated lime injection (HLI) system and an activated carbon injection (ACI) system for use on CR Units 1 and 2. The systems were previously authorized for temporary use during a Western Bituminous (WB) coal test burn program under permit no. 0170004-040-AC. HLI and ACI Test Permit They would be improved for continuous use.

1.5. Project Description

Hydrated lime [$Ca(OH)_2$] sorbent will be transported to the site in trucks. The sorbent will be blown using dried air into a sorbent storage silo. The sorbent will be metered and pneumatically conveyed to the injection point(s) in the flue gas stream. The location of the HLI points will be after the boilers and prior to the electrostatic precipitators (ESP) on CR Units 1 and 2. The sorbent will react with acidic compounds, including hydrogen chloride (HCl) and sulfur oxides (SO_X), in the flue gas stream to form particulate matter ($CaCl_2$, $CaSO_3$ and $CaSO_4$) that will be removed in the ESPs.

Activated carbon will be transported to the site in a manner similar to the hydrated lime sorbent or in bagged form into a sorbent storage silo. The sorbent will be metered and pneumatically conveyed to the injection point(s) in the flue gas stream. The location of the ACI injection points will be after the air heaters and prior to the ESPs. The activated carbon will adsorb mercury (Hg) and mercury compounds (e.g. HgO, HgCl) in the flue gas stream. The activated carbon containing the Hg and Hg compounds will be removed in the ESPs.

The general locations of the injection points for the HLI and ACI systems are as depicted in **Figure 3**. The location of the storage silos, adjacent to CR Unit 2, is shown in **Figure 4**.

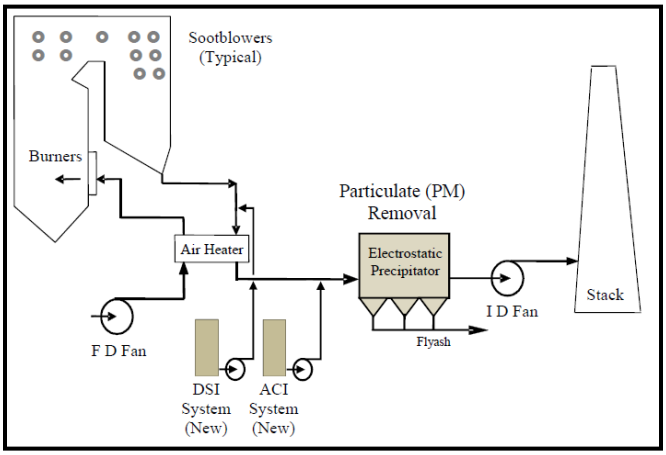

Figure 3 - HLI and ACI Systems for CR Units 1 & 2.

Figure 4 - Locations of HLI and ACI Silos.

The estimated HLI and ACI rates at full load will be as high as 1,500 and 400 pounds/hour/unit, respectively. Each sorbent storage system has a proposed flow rate of 2,000 actual cubic feet per minute (acfm) through the silo vent filter during loading operations, which are estimated to occur for six hours/day.

Past projects authorized work on the ESPs to insure compliance with the particulate matter (PM) emission limits of 0.04 pounds per million Btu (lb/MMBtu) heat input applicable to CR Units 1 and 2 (combined). During the recent trials it was determined that further work and optimization will be required on the ESPs because the HLI and ACI systems will increase the particulate loading. The WB coal that Duke will use contains less sulfur, chloride and Hg content and has lower NO_X emission characteristics. However the fly ash generated when using WB coal has greater resistivity than fly ash from higher sulfur CAPP and affects ESP collection efficiency.

DEF analyzed the results and is considering some or all of the following improvements:

- Flue gas redistribution;
- High frequency power supplies;
- Hopper High Level Indicators & Hopper Vibrators;
- High voltage rapper connections project;
- Rapper testing, adjustments and optimization;
- Additional flow baffles; and
- Recommissioning of the last 3 fields of Unit 2 old A/B ESP.

The ESP work, which is a continuation of past authorized efforts, is scheduled during the outages for Unit 1 in spring 2014 (April) and spring 2015, and the outage for Unit 2 in fall 2014. DEF will continue to evaluate the performance of its ESPs following each of these outages, which may include engineering and performance testing.

1.6. Processing Schedule

March 27, 2014 Received application.

April 25, 2014 Issued Draft Permit Package.

2. PSD APPLICABILITY FOR HLI AND ACI PROJECT

2.1. General PSD Applicability

The Department regulates major stationary sources in accordance with Florida's PSD program pursuant to Rule 62-212.400, F.A.C. PSD preconstruction review is required in areas that are currently in attainment with the state and federal ambient air quality standards (AAQS) or areas designated as "unclassifiable" for these regulated pollutants.

Commonly addressed PSD pollutants include: CO, NO_X, PM, PM_{10}, $PM_{2.5}$, SO_2, VOC, SAM, Pb, fluorides (F), and Hg. Additional PSD pollutants that are more common to certain other industries include: hydrogen sulfide (H_2S), TRS including H_2S, reduced sulfur compounds (RSC) including H_2S, municipal waste combustor (MWC) organics measured as total tetra- through octa-chlorinated dibenzo-p-dioxins and dibenzofurans (dioxin/furan), MWC metals measured as PM; MWC acid gases measured as SO_2 and HCl, and municipal solid waste (MSW) landfill emissions as non-methane organic compounds (NMOC). Greenhouse gases (GHGs) are discussed further below.

As defined in Rule 62-210.200(Definitions), F.A.C., a stationary source is a "major stationary source" (major PSD source) if it emits or has the potential to emit (PTE):

- 250 tons per year (tons/year) or more of any PSD pollutant; <u>or</u>
- 100 tons/year or more of any PSD pollutant <u>and</u> the facility belongs to one of the 28 listed PSD major facility categories.

The list given in the citation includes the category of "fossil fuel-fired steam electric plants of more than 250 million British thermal units per hour heat input". The given category applies to the Crystal River Energy Complex. The Crystal River Energy Complex is a major stationary source based on actual emissions of and potential to emit 100 tons/year or more of several individual PSD pollutants.

Although a new stationary source may be "major" for only one PSD pollutant, the project must include BACT controls for any PSD pollutant that exceeds the corresponding significant emission rates (SERs) given in **Table 2**.

As defined in Rule 62-210.200(Definitions), F.A.C., a PSD pollutant also includes any *"'Regulated New Source Review (NSR) Pollutant' as defined at 40 CFR 52.21(b)(50) and as adopted and incorporated by reference in Rule 62-204.800, F.A.C."* Link to Amended PSD-Pollutant Definition

Table 2 – List of Significant Emission Rates by PSD-Pollutant. [1]

Pollutant	SER (TPY)	Pollutant	SER (TPY)
CO	100	NO_X	40
$PM/PM_{10}/PM_{2.5}$	25/15/10	Ozone (VOC) [2]	40
$PM_{2.5}$ (NO_X)	40	$PM_{2.5}$ (SO_2)	40
Ozone (NO_X) [2]	40	SAM	7
SO_2	40	Pb	0.6
Hg	0.1	Fluorides	3

1. Excluding fluoride and pollutants specific to the Pulp and Paper industry, MWCs, MSW landfills.
2. Ozone (O_3) is regulated by its precursors (VOC and NO_X). PSD for $PM_{2.5}$ can be triggered by its precursors (NO_X and SO_2).

According to 40 CFR 52.21(b)(50)(iv), the definition of NSR-Pollutant (and thus the Department's definition of PSD-Pollutant) includes *"any pollutant that otherwise is subject to regulation under the Act as defined in paragraph (b)(49) of this section"*. Link to 40 CFR 52.21

Pursuant to section 40 CFR 52.21(b)(49), GHGs from an existing stationary source is subject to regulation if:

- It is an existing major stationary source for a regulated NSR pollutant that is not GHGs, and also will have an emissions increase of a regulated NSR pollutant, and an emissions increase of 75,000 tons/year CO_2e or more; or
- It is an existing stationary source that emits or has the potential to emit 100,000 tons/year CO_2e, when such stationary source undertakes a physical change or change in the method of operation that will result in an emissions increase of 75,000 tons/year CO_2e or more.

At this writing (April 25, 2014), the Department is awaiting the publication of approval by EPA of the Department's GHG rules including the definitions given above.

The units emit all of the PSD-pollutants mentioned in Table 3 and GHGs (CO_2e).

2.2. PSD Applicability for Project

The project is located in Citrus County, which is in an area that is currently in attainment with the state and federal AAQS or otherwise designated as unclassifiable.

Methodology for Calculations of Baseline Actual Emissions and Projected Actual Emissions

To determine whether the project causes net emissions increases equal to or greater than the respective SER (triggering PSD) requires a comparison of recent "baseline actual emissions" with future "projected actual emissions". According to Rule 62-210.200(Definitions), F.A.C., for any existing electric utility steam generating unit:

"Baseline actual emissions" means the average rate, in tons per year, at which the unit actually emitted the pollutant during any consecutive 24-month period selected by the owner or operator within the 5-year period immediately preceding the date a complete permit application is received by the Department. The Department shall allow the use of a different time period upon a determination that it is more representative of normal source operation".

1. The average rate shall include fugitive emissions to the extent quantifiable, and emissions associated with startups and shutdowns.
2. The average rate shall be adjusted downward to exclude any non-compliant emissions that occurred while the source was operating above any emission limitation that was legally enforceable during the consecutive 24-month period.

3. For a PSD pollutant, when a project involves multiple emissions units, only one consecutive 24-month period must be used to determine the baseline actual emissions for the emissions units being changed. A different consecutive 24-month period can be used for each PSD pollutant.
4. The average rate shall not be based on any consecutive 24-month period for which there is inadequate information for determining annual emissions, in tons per year, and for adjusting this amount if required by subparagraph 2., above.

According to Rule 62-210.200(Definitions), F.A.C., for an existing unit (other than an electric steam generating unit):

"Projected Actual Emissions" means the maximum annual rate, in tons/year, at which an existing emissions unit is projected to emit a PSD pollutant in any one of the 5 years following the date the unit resumes regular operation after the project, or in any one of the 10 years following that date, if the project involves increasing the emissions unit's design capacity or its potential to emit that PSD pollutant and full utilization of the unit would result in a significant emissions increase or a significant net emissions increase at the major stationary source. One year is one 12-month period. In determining the projected actual emissions, the Department:

(a) Shall consider all relevant information, including historical operational data, the company's own representations, the company's expected business activity and the company's highest projections of business activity, the company's filings with the State or Federal regulatory authorities, and compliance plans or orders, including consent orders; and

(b) Shall include fugitive emissions to the extent quantifiable and emissions associated with startups and shutdowns; and

(c) Shall exclude that portion of the unit's emissions following the project that an existing unit could have accommodated during the consecutive 24-month period used to establish the baseline actual emissions and that are also unrelated to the particular project including any increased utilization due to product demand growth; or

(d) In lieu of using the method set out in paragraphs (a) through (c) above, may be directed by the owner or operator to use the emissions unit's potential to emit, in tons per year.

Applicant's Estimates of Baseline and Projected Actual Emissions and Increases (Decreases)

Baseline actual emissions (BAE) were estimated from the values reported in the Annual Operating Reports (AORs) submitted for the period 2009 – 2013, inclusive. The bases for development of projected actual emissions (PAE) are:

- The results of the HLI and ACI tests conducted pursuant to permit 0170004-040-AC;
- Results of testing while using WB coal and planned use of WB coal in the;
- Projection of Units 1 and 2 utilization submitted to the Florida Public Service Commission (PSC);
- Applicable combined PM emission limit of 0.04 pounds/MMBtu heat input during normal operation and 0.12 pounds/MMBtu heat input during soot blowing operations.

The basic information from the HLI, ACI and WB trials during steady state operation is summarized in **Table 3 –**. Results are compared also with use of Central Appalachian (CAPP) used in the past and which the company does not plan to use in the future as fuel for Units 1 and 2.

The "highest" emission rates while burning WB Coal (with or without injection) were used for the purpose of estimating projected PAE.

Similar testing was performed and results are available for comparison during soot blowing.

Table 3 – Emissions Rates From CR Units 1 and 2 during 2013 Fuel and Sorbent Test Program. [1]

Pollutant	Emissions Rates from Unit 1				
	CAPP [2] Coal		WB [3] Coal		
	No Injection	With Injection	No Injection	With Injection	Highest
NO_X (lb/MMBtu)	0.359	0.356	0.294	0.305	0.305
SO_2 (lb/MMBtu)	1.591	1.619	0.786	0.701	0.786
HCl (lb/MMBtu)	-	0.086	0.004	0.003	0.004
PM (lb/MMBtu)	0.047 [6]	0.098 [6]	0.076 [6]	0.119 [6]	0.119 [6]
VE [4] (%)	17.4 -	18.6	22.1	25.6	25.6
Hg [5] (lb/TBtu)	Equal to Unit 2	2.874	1.154	0.907	1.154

Pollutant	Emissions Rates from Unit 2				
	CAPP Coal		WB Coal		
	No Injection	With Injection	No Injection	With Injection	Highest
NO_X (lb/MMBtu)	0.352	HLI and ACI not practiced on Unit 2 while burning CAPP	0.257	0.281	0.281
SO_2 (lb/MMBtu)	1.793		0.737	0.775	0.775
HCl (lb/MMBtu)	0.085		0.003	0.006	0.006
PM (lb/MMBtu)	0.014		0.028	0.055 [6]	0.055 [6]
VE [4] (%)	5.6		9.6	12.6	12.6
Hg [5] (lb/TBtu)	3.31		1.085	0.784	1.085

1. Units are lb/MMBtu, except for Hg and visible emissions (VE).
2. CAPP is central Appalachian Coal.
3. WB is Western Bituminous Coal.
4. VE is reported in percent (%) Opacity.
5. Hg is reported in pounds per trillion Btu (lb/TBtu).
6. PM limit applicable to Units 1 and 2 (combined) is 0.04 lb/MMBtu effective January 1, 2014.

The following inferences are drawn from the results of the test program:

- NO_X, SO_2 HCl and Hg emission factors are much lower when using WB coal versus CAPP coal whether or not injection is practiced;
- When using WB coal, Hg emissions factors are lower when injection is practiced;
- PM emission factors and VE are greater when using WB coal versus CAPP coal;
- PM emission factors are greater when injection is practiced.

Throughout 2013, the units were subject to a PM emission limit of 0.1 lb/MMBtu. In accordance with Section 62-296.340, F.A.C., Best Available Retrofit Technology (BART) the units are subject to BART emission limits for PM on January 1, 2014. Pursuant to permit no. 0170004-017-AV issued on February 26, 2009 (expires July 1, 2014) the PM emission limit applicable to Units 1 and 2 (combined) during 2014 is 0.04 lb/MMBtu. That value is a ceiling to PM emissions in the future whether CAPP or WB coal is burned in Units 1 and 2. Link to Chapter 62-296, FAC CR Units 1 and 2 BART PM Permit

The key applicable conditions are contained in Section 2.C. of the existing BART PM permit as follows:

3. Particulate Matter Emissions Standard – Steady State Operations. As determined by EPA Method 5 or 17, particulate matter emissions from Units 1 and 2 combined shall not exceed 0.04 lb/MMBtu, on a weighted average basis of the total heat input. Compliance shall be demonstrated on the average of the 3 required 1-hour test runs. [Rule 62-296.340 (BART), F.A.C.]

4. Particulate Matter Emissions Standard – Soot Blowing and Load Change Operations. As determined by EPA Method 5 or 17, particulate matter emissions from Units 1 and 2 combined shall not exceed 0.12 lb/MMBtu, on a weighted average basis of the total heat input. Compliance shall be demonstrated on the average of the 3 required 1-hour test runs. [Rule 62-296.340 (BART), F.A.C.]

5. Opacity Standard – Steady State Operations. As determined by data collected from the existing COMS or EPA 9, visible emissions during steady-state operations from: Unit 1 shall not exceed 30% opacity based on a 6-minute average except for one 6-minute average per hour not to exceed 35% opacity; Unit 2 shall not exceed 15% opacity based on a 6-minute average except for one 6-minute average per hour not to exceed 20% opacity. [Rule 62-296.340 (BART), F.A.C.]

6. Opacity Standard – Soot Blowing and Load Change Operations. As determined by data collected from the existing COMS or EPA 9, visible emissions resulting from soot-blowing and load change operations shall be permitted providing (1) best operational practices to minimize emissions are adhered to and (2) the duration of excess emissions shall be minimized. In no case shall the duration of such emissions exceed 3 hours in any 24-hour period and visible emissions from: Unit 1 shall not exceed 40% opacity based on a 6-minute average; Unit 2 shall not exceed 25% opacity based on a 6-minute average. A load change occurs when the operational capacity of a unit is in the 10 percent to 100 percent capacity range, other than startup or shutdown, which exceeds 10 percent of the unit's rated capacity and which occurs at a rate of 0.5 percent per minute or more.

Past and projected percent (%) capacity factors for the all coal units at Crystal River are presented in **Table 4**. The maximum future capacity factors for Units 1 and 2 (through 2018) were estimated at 26 and 35%, respectively.

Table 4 – Past and Projected Annual Capacity Factors for CR Units 1, 2, 4 and 5 [1, 2]

Year	Unit 1 (%)	Unit 2 (%)	Unit 4 (%)	Unit 5 (%)
2008	62	68	67	79
2009	58	58	62	44
2010	52	54	53	77
2011	32	37	64	67
2012	33	32	69	51
2013	28	31	77	76
2014	**26**	31	79	74
2015	19	27	84	73
2016	23	30	84	83
2017	23	32	85	90
2018	20	**35**	91	82

1. Based on Duke Submittal to Florida Public Service Commission (PSC) in March 2014.
2. Annual capacity factor is the amount of electric energy a generator actually produces divided by the maximum it could produce at continuous full power operation during the year. Factor expressed as %.

Table 5 – Comparison of Projected Actual Emissions (PAE) with Baseline Actual Emissions (BAE) from CR Units 1 and 2.

Pollutant	Historical Emissions Units 1 and 2 (tons/year combined)						Projected Emissions Units 1 and 2 (tons/year)			PAE (tons/year)	SER (tons/year)	PSD Review Required?
	2013	2012	2011	2010	2009	BAE	Unit 1	Unit 2	PAE			
NO_X	5,081	4,263	3,643	7,258	7,726	7,492	1,304	2,068	3,372	-4,120	40	No
CO	321.9	273.5	288.8	436.6	466.8	451.7	94	161	255	-197	100	No
SO_2	24,027	21,183	20,959	33,050	33,444	33,247	3,355	5,699	9,054	-24,194	40	No
VOC	38.5	32.7	34.5	52.3	55.9	54.1	11	19	31	-24	40	No
PM	549.1	937.9	666.8	811.0	869.3	840.1	214	368	583	-257	25	No
PM_{10}	367.8	434.5	460.5	543.3	582.3	562.8	143	246	392	-171	15	No
$PM_{2.5}$	159.2	188.0	157.6	227.9	243.6	235.7	62	107	171	-65	10	No
SAM [a]	3,679	3,244	3,209	5,061	5,121	5,091	514	873	1,386	-3,705	7	No
Pb	0.3	0.2	0.2	0.4	0.4	0.4	0.08	0.14	0.21	-0.16	0.6	No
HCl	1,218	1,034	1,090	1,655	1,768	1,712	17	44	61	-1,651	Not PSD Pollutant--	
Hg						0.049	0.005	0.008	0.13	-0.036	0.1	No
GHG (CO2e) [b]	1,894,389	1,533,971	1,659,633	4,365,777	4,690,724	4,528,251	881,861	1,517,932	2,399,793	-2,128,457	Not Subject to Regulation	

PAE were based on the WB coal and HLI/ACI trials, the projected capacity factors and the updated PM emission limits applicable in 2014. Table 5 is a comparison of the PAE after the proposed project with the BAE prior to the project. The PAE also include the additional 2.2 tons/year of filterable $PM/PM_{10}/PM_{2.5}$ emissions from sorbent handling and storage.

The comparisons demonstrate that emissions of all relevant PSD pollutants will be lower after the project than prior to the project. Therefore, PSD review is not applicable. For reference, the reductions of $PM_{2.5}$ and PM_{10} will be much greater than stated if condensable PM_{10} and $PM_{2.5}$ is included. The reason is that there will be reductions of approximately 32,000 tons/year of condensable $PM_{10}/PM_{2.5}$ precursors; namely NO_X, SO_2 and sulfuric acid mist (SAM).

To avoid exceeding the new limit of 0.04 lb PM/MMBtu applicable to Units 1 and 2 (combined), Duke plans to convert to the exclusive use of WB coal in steps, and will continue to evaluate emission levels. This will be accomplished by periodically testing as the fraction of WB coal is increased and as the continuing ESP improvements are implemented.

In accordance with Rule 62-212.300(1)(e), F.A.C., the Department will require reporting of PM emissions in tons/year during the period 2014 through 2018. Refer to the attached draft permit for details.

3. PRELIMINARY DETERMINATION

The Department makes a preliminary determination that the proposed project will comply with all applicable state and federal air pollution regulations as conditioned by the Draft Permit. Alvaro Linero is the project engineer responsible for reviewing the application, preparing this evaluation and drafting the permit. Additional details of this analysis may be obtained by contacting Mr. Linero at alvaro.linero@dep.state.fl.us , 850-717-9076, or the Department's Office of Permitting and Compliance at Mail Station #5505, 2600 Blair Stone Road, Tallahassee, Florida 32399-2400.