Curle, Mary Beth

From: EPOST_AIR_NWD
To: Cynthia Arnold
Subject: Project Name/Description/Facility County: BURKHEAD GIN CO / Burkhead Gin emissions control upgrades / SANTA ROSA

-----Original Message-----
From: EPOST_AIR_NWD@dep.state.fl.us [mailto:EPOST_AIR_NWD@dep.state.fl.us]
Sent: Tuesday, October 30, 2012 1:10 PM
To: burkgin@bellsouth.net
Cc: kelly.mccarthy.ctr@mda.mil; burkgin@bellsouth.net; Ard, Howard; EPOST_AIR_NWD
Subject: Project Name/Description/Facility County: BURKHEAD GIN CO / Burkhead Gin emissions control upgrades / SANTA ROSA

Dear Applicant:

Thank you for your air pollution permit application for the referenced project. We encourage direct communication with our permit processor to answer any questions that may come up during the review process. You may be contacted by our processor by e-mail or by phone. Our goal is to reduce the number of formal requests for additional information (RAIs), as well as the overall time to process your application. We appreciate your efforts to assist us by ensuring that your response to any questions or RAIs is timely, thorough and complete.

Facility Name: BURKHEAD GIN
Project Description: Burkhead Gin emissions control upgrades
Application Project No: 1130027-006-AC
Application Received Date: 10/30/2012
Permit Processor: Howard Ard
Processor Phone: 850-595-0622
Processor Email: howard.ard@dep.state.fl.us

The Department will help you navigate the permitting process and explain the permit application requirements for your facility. You may schedule a meeting or teleconference with the permitting processor as needed or simply send an email.

If you have any questions, or if you received this email in error, please contact the Permitting Processor.

Best Regards,

Florida Department of Environmental Protection
Northwest District
Air Resource Management
160 Governmental Center, Suite 308
Pensacola, FL 32502-5794
Tel. 850-595-8300

Please do not reply to this auto-generated email.

Permitting Application - Permit Detail and Log Permit

ARMS Facility

POINT | AIRS ID 1130027 | STATUS A | OFFICE NWD | NW: PENSACOLA

SITE NAME BURKHEAD GIN | COUNTY SANTA ROSA

OWNER/COMPANY BURKHEAD GIN

Project

AIR Permit # - - | Project # 006 | CRA Reference # 395536

Permit Office NWD (DISTRICT) | Agency Action Pending | OGC

Project Name BURKHEAD GIN CO | Desc Burkhead Gin emissions control upgrades

Type/Sub/Des AC / 1F | Source less than 5 tpy $250 | Logged 10/30/2012

Received 10/30/2012 | Issued | Expires | Application Action MODIFICATION

Fee 250.00 | Fee Recd 250.00 | Date | Override NONE

Related Party

Role APPLICANT | Begin 10/30/2012 | End

Name BURKHEAD, BETTY J | Company BURKHEAD GIN

Address P O BOX 69, 225 N MAGNOLIA ST

City JAY | State FL | Zip 32565 - | Country

Phone 850-675-4636 | Fax 850-675-4402

Processors

Processor ARD_H | Y | Active 10/30/2012 | Inactive | Events

Cash Receiving Application - Collection Point Log Remittance

CL AREA NWD

CRAF006A

Logged Total $1,345.00

Collection Point Log Remittance

Remittance ID 1005182 Type * CP Received Date * 10/30/2012 Status RECEIVED

System Receipt 794334 PNR Check # * 17493 Amount * 250.00

SSN/FEID Name * BURKHEAD GIN COMPANY LLC

First Middle Title Suffix

Address1 P O BOX 69

Address2

City JAY ST FL Zip 32565 -

Country Short Comments 1130027-006-AC MBC

PAYMENT(S)

Payment ID	Distribution CL Area	Object Code/Description		Payment Amount	Reference#	Appl	Fund *	Grant *	Status
1180225	NWD	002222	AIR CONSTRUCT	250.00	1130027006	ARMS	PFTF		COMPLETE

COMMIT FREQUENTLY 250.00 Payment Total

October 25, 2012

Mr. Rick Bradburn
Air Program Administrator
Florida Department of Environmental Protection
160 Governmental Center, Suite 308
Pensacola, Florida 32502-5794

Re: Burkhead Gin Company – Jay Facility
Facility ID No.: 1130027, Santa Rosa County, Florida
Application for Air Construction Permit

Dear Mr. Bradburn:

In accordance with Rule 62-210.300(1)(a), F.A.C., Burkhead Gin Company is submitting two signed copies of DEP Form No. 62-210.900(3) to obtain an air construction permit to address facility improvements and changes. A check in the amount of $250.00 is also enclosed to cover the processing fee.

If any additional information can be provided in support of this application, please contact Zane Burkhead at (850) 675-4636. We greatly appreciate the assistance of your staff members in this permit process.

Sincerely,

Betty J. Burkhead

Betty J. Burkhead, Owner
Burkhead Gin Company
P.O. Box 69
Jay, Florida 32565

Enclosures: DEP Form 62-210.900(3) (2 copies)
Attachments 1-6
Check in the amount of $250.00

c: Cynthia Arnold, GCE&E, carnold@gcenv.com

RECEIVED
OCT 30 2012
NORTHWEST FLORIDA
DEP

Department of Environmental Protection

Division of Air Resources Management

APPLICATION FOR AIR PERMIT - NON-TITLE V SOURCE

See Instructions for Form No. 62-210.900(3)

I. APPLICATION INFORMATION

1130027-006-AC

Identification of Facility

1. Facility Owner/Company Name: **Burkhead Gin Company**	
2. Site Name: **Jay Facility**	
3. Facility Identification Number: **1130027** [ ] Unknown	
4. Facility Location: Street Address or Other Locator: **14294 Hwy 89 North** City: **Jay** County: **Santa Rosa** Zip Code: **32565**	
5. Relocatable Facility? [ ] Yes [X] No	6. Existing Permitted Facility? [X] Yes [ ] No

Application Contact

1. Name and Title of Application Contact: **Betty J. Burkhead, Owner** **[burkgin@bellsouth.net]**
2. Application Contact Mailing Address: Organization/Firm: **Burkhead Gin Company** Street Address: **P.O. Box 69** City: **Jay** State: **Florida** Zip Code: **32565**
3. Application Contact Telephone Numbers: Telephone: **(850) 637-6460** Fax: **(850) 675-4402**

Application Processing Information (DEP Use)

1. Date of Receipt of Application:	
2. Permit Number:	

RECEIVED
OCT 30 2012
NORTHWEST FLORIDA
DEP

Purpose of Application

Air Operation Permit Application

This Application for Air Permit is submitted to obtain: (Check one)

[ ] Initial non-Title V air operation permit for one or more existing, but previously unpermitted, emissions units.

[ ] Initial non-Title V air operation permit for one or more newly constructed or modified emissions units.

Current construction permit number:_____

[ ] Non-Title V air operation permit revision to address one or more newly constructed or modified emissions units.

Current construction permit number:_____

Operation permit number to be revised:_____

[ ] Initial non-Title V air operation permit under Rule 62-210.300(2)(b), F.A.C., for an existing facility seeking classification as a synthetic non-Title V source.

Current operation/construction permit number(s):

_____

[ ] Non-Title V air operation permit revision for a synthetic non-Title V source. Give reason for revision; e.g., to address one or more newly constructed or modified emissions units.

Operation permit number to be revised:_____

Reason for revision:_____

Air Construction Permit Application

This Application for Air Permit is submitted to obtain: (Check one)

[**X**] Air construction permit to construct or modify one or more emissions units.

[ ] Air construction permit to make federally enforceable an assumed restriction on the potential emissions of one or more existing, permitted emissions units.

[ ] Air construction permit for one or more existing, but unpermitted, emissions units.

Owner/Authorized Representative

1. Name and Title of Owner/Authorized Representative:
   Betty J. Burkhead, Owner **[burkgin@bellsouth.net]**
2. Owner/Authorized Representative Mailing Address:
   Organization/Firm: **Burkhead Gin Company**
   Street Address: **14294 Hwy 89 North**
   City: **Jay** State: **Florida** Zip Code: **32565**
3. Owner/Authorized Representative Telephone Numbers:
   Telephone: **(850) 675-4636** Fax: **(850) 675-4402**
4. Owner/Authorized Representative Statement:

   I, the undersigned, am the owner or authorized representative of the facility addressed in this application. I hereby certify, based on information and belief formed after reasonable inquiry, that the statements made in this application are true, accurate and complete and that, to the best of my knowledge, any estimates of emissions reported in this application are based upon reasonable techniques for calculating emissions. The air pollutant emissions units and air pollution control equipment described in this application will be operated and maintained so as to comply with all applicable standards for control of air pollutant emissions found in the statutes of the State of Florida and rules of the Department of Environmental Protection and revisions thereof. I understand that a permit, if granted by the Department, cannot be transferred without authorization from the Department, and I will promptly notify the Department upon sale or legal transfer of any permitted emissions unit.*

   Betty J. Burkhead 10-29-12
   Signature Date

* Attach letter of authorization if not currently on file.

Professional Engineer Certification

1. Professional Engineer Name: **Kelly T. McCarthy, P.E.**
   Registration Number: **0050509** kelly.mccarthy.ctr@mda.mil
2. Professional Engineer Mailing Address:
   Organization/Firm: **Gulf Coast Environmental & Engineering, Inc.**
   Street Address: **600 South Barracks Street, Suite 210-5**
   City: **Pensacola** State: **Florida** Zip Code: **32502**
3. Professional Engineer Telephone Numbers:
   Telephone: **(850) 433-8588** Fax: **(850) 435-2725**

4. Professional Engineer Statement:

I, the undersigned, hereby certify, except as particularly noted herein, that:*

(1) To the best of my knowledge, there is reasonable assurance that the air pollutant emissions unit(s) and the air pollution control equipment described in this Application for Air Permit, when properly operated and maintained, will comply with all applicable standards for control of air pollutant emissions found in the Florida Statutes and rules of the Department of Environmental Protection; and

(2) To the best of my knowledge, any emission estimates reported or relied on in this application are true, accurate, and complete and are either based upon reasonable techniques available for calculating emissions or, for emission estimates of hazardous air pollutants not regulated for an emissions unit addressed in this application, based solely upon the materials, information and calculations submitted with this application.

If the purpose of this application is to obtain an air construction permit for one or more proposed new or modified emissions units (check here [X], if so), I further certify that the engineering features of each such emissions unit described in this application have been designed or examined by me or individuals under my direct supervision and found to be in conformity with sound engineering principles applicable to the control of emissions of the air pollutants characterized in this application.

If the purpose of this application is to obtain an initial air operation permit or operation permit revision for one or more newly constructed or modified emissions units (check here [ ], if so), I further certify that, with the exception of any changes detailed as part of this application, each such emissions unit has been constructed or modified in substantial accordance with the information given in the corresponding application for air construction permit and with all provisions contained in such permit.

Kelly McCarthy — 23 Oct 12

Signature — Date

(Seal)

* Attach any exception to certification statement.

Scope of Application

Emissions Unit ID	Description of Emissions Unit	Permit Type	Processing Fee
005	Cotton Gin Operations	AC1F	$250

Application Processing Fee

Check one: [X] Attached - Amount: $ 250 [ ] Not Applicable

Construction/Modification Information

1. Description of Proposed Project or Alterations:

Burkhead proposes changes as described below:

A) Add two additional 84" cyclones to replace the existing dust house as upgrades to the facility's emissions control equipment;
B) Move Cyclone #25 to the mote house in order to reclaim the final stages of the trash and decrease the amount of trash in the final stage.

After the reclaiming process, the remaining trash goes through Cyclones #23 and #24 and out to the trash trailers. Cyclones #23 and #24 will not be moved and will remain for the same purpose as indicated in the current air operating permit No. 1130027-005-AO. See Emission Calculations (Attachment 1).

The design capacity of the cotton gin is 40 bales of lint cotton (500 lbs per bale of finished product) per hour. Burkhead Gin requests that the maximum allowable operating rate (permitted capacity) be established at 40 bales/hour by this construction permit.

2. Projected or Actual Date of Commencement of Construction: **Upon approval from the FDEP and issuance of permit**

3. Projected Date of Completion of Construction: **November 2012**

Application Comment

The 2 new cyclones (#26 & #27) are being added as upgrades to emissions control. They will become part of EU No. 005 (lint cleaning and baling) and represent an emissions improvement to the Battery Condenser (SCC 3-02-004-08). The emission rates shown in Attachment 1 are believed to be conservatively high since the 2 new cyclones will replace the current dust house.

Moving Cyclone #25 to the mote house (Trash and Mote System) to augment reclaiming the maximum amount of trash in the final stage is also considered an environmental improvement and consistent with the above calculations of potential emissions.

II. FACILITY INFORMATION

A. GENERAL FACILITY INFORMATION

Facility Location and Type

1. Facility UTM Coordinates: Zone: **16** East (km): **485.3** North (km): **3425.8**			
2. Facility Latitude/Longitude: Latitude (DD/MM/SS): **30/57/22** Longitude (DD/MM/SS): **87/08/43**			
3. Governmental Facility Code: **0**	4. Facility Status Code: **A**	5. Facility Major Group SIC Code: **07**	6. Facility SIC(s): **0724**
7. Facility Comment (limit to 500 characters): **Burkhead Gin Company is a cotton gin consisting of the following processes: raw cotton unloading, seed cotton drying and cleaning, ginning, lint cleaning and baling, seed handling, trash and mote system, and trash handling. Seed cotton is pneumatically conveyed through dryers, gins and cleaners to remove seeds and trash. Cleaned (lint) cotton is baled as the final product. PM from these systems is controlled by cyclones. Natural gas-fired heaters are used to dry the seed cotton during the unloading and conveying operations.**			

Facility Contact

1. Name and Title of Facility Contact: **Betty J. Burkhead, Owner**
2. Facility Contact Mailing Address: Organization/Firm: **Burkhead Gin Company** Street Address: **14294 Hwy 89 North** City: **Jay** State: **Florida** Zip Code: **32565**
3. Facility Contact Telephone Numbers: Telephone: **(850) 675-4636** Fax: **(850) 675-4402**

Facility Regulatory Classifications

Check all that apply:

1. [ ] Small Business Stationary Source?	[ ] Unknown
2. [**X**] Synthetic Non-Title V Source?	
3. [ ] Synthetic Minor Source of Pollutants Other than HAPs?	
4. [ ] Synthetic Minor Source of HAPs?	
5. [ ] One or More Emissions Units Subject to NSPS?	
6. [ ] One or More Emission Units Subject to NESHAP Record keeping or Reporting?	
7. Facility Regulatory Classifications Comment (limit to 200 characters): **Burkhead Gin Company is a synthetic minor source of emissions.**	

Rule Applicability Analysis

In accordance with 62-210.300 (1)(a), F.A.C., Burkhead is submitting this application to obtain a construction permit to address facility improvements and changes.

Other Potentially Applicable Rules for this project are as follows:

62-296.320(4)(b)1 & 4 F.A.C. – General Particulate Emissions Limiting Standards, General Visible Emissions Standard.

B. FACILITY POLLUTANTS

List of Pollutants Emitted

1. Pollutant Emitted	2. Pollutant Classif.	3. Requested Emissions Cap		4. Basis for Emissions Cap	5. Pollutant Comment
		Lb/hour	tons/year		
PM	**PM**		**<100**	**Other**	**Escape Title V**

C. FACILITY SUPPLEMENTAL INFORMATION

Supplemental Requirements

1. Area Map Showing Facility Location: [ ] Attached, Document ID: [ ] Not Applicable [X] Waiver Requested
2. Facility Plot Plan: [**X**] Attached, Document ID**: Attachment 2** [ ] Not Applicable [ ] Waiver Requested
3. Process Flow Diagram(s): [**X**] Attached, Document ID: **Attachments 3, 4** [ ] Not Applicable[ ] Waiver Requested
4. Precautions to Prevent Emissions of Unconfined Particulate Matter: [ ] Attached, Document ID: [ ] Not Applicable [**X**] Waiver Requested
5. Supplemental Information for Construction Permit Application: [X] Attached, Document ID: **Attachment 5** [ ] Not Applicable
6. Supplemental Requirements Comment: **Burkhead Gin Company requests a waiver from submission of Item 1 since a current copy is on file with Florida DEP. The revised Facility Plot Plan (Attachment 2) and updated Process Flow Diagrams (Attachments 3 & 4) for that portion of facility operations that are changing are included. Attachment 5 is supplemental information from the vendor for the proposed new Cyclones #26 and #27.** **An updated copy of the document for Item 4. "Precautions to Prevent Emissions of Unconfined Particulate Matter" was previously submitted to the FDEP for renewal of the current permit 1130027-005-AO and will not change with the addition of the two new cyclones (#26 and #27).**

III. EMISSIONS UNIT INFORMATION

A separate Emissions Unit Information Section (including subsections A through G as required) must be completed for each emissions unit addressed in this Application for Air Permit. If submitting the application form in hard copy, indicate, in the space provided at the top of each page, the number of this Emissions Unit Information Section and the total number of Emissions Unit Information Sections submitted as part of this application.

A. GENERAL EMISSIONS UNIT INFORMATION

Emissions Unit Description and Status

1. Type of Emissions Unit Addressed in This Section: (Check one)

[ ] This Emissions Unit Information Section addresses, as a single emissions unit, a single process or production unit, or activity, which produces one or more air pollutants and which has at least one definable emission point (stack or vent).

[X] This Emissions Unit Information Section addresses, as a single emissions unit, a group of process or production units and activities which has at least one definable emission point (stack or vent) but may also produce fugitive emissions.

[ ] This Emissions Unit Information Section addresses, as a single emissions unit, one or more process or production units and activities which produce fugitive emissions only.

1. Description of Emissions Unit Addressed in This Section (limit to 60 characters):
This emissions unit covers the Cotton Gin Operations which result in particulate matter emissions. Equipment includes Cyclones 1 through 12, and Cyclones 13 through 25, (proposed new Cyclones #26 and #27) as well as Heaters 1 through 4.

3. Emissions Unit Identification Number: ID: **005**	[ ] No ID [ ] ID Unknown

4. Emissions Unit Status Code: **A**	5. Initial Startup Date: **N/A**	6. Emissions Unit Major Group SIC Code: **0724**

2. Emissions Unit Comment: (Limit to 500 Characters)

Emissions Unit Information Section 1 of 1

Emissions Unit Control Equipment

1. Control Equipment/Method Description (limit to 200 characters per device or method) **Multiclone-type dust collection is utilized at appropriate locations within the cotton gin process.**
2. Control Device or Method Code(s): **007**

Emissions Unit Details

1. Package Unit: Manufacturer: Model Number:
2. Generator Nameplate Rating: **N/A**
3. Incinerator Information: **N/A** Dwell Temperature: Dwell Time: Incinerator Afterburner Temperature:

Emissions Unit Operating Capacity and Schedule

1. Maximum Heat Input Rate: **12 mmBtu/hr**
2. Maximum Incineration Rate: **N/A** lb/hr tons/day
3. Maximum Process or Throughput Rate: **N/A**
4. Maximum Production Rate: **60,000 bales per year**
5. Requested Maximum Operating Schedule: **3,000 hours per year maximum** hours/day days/week weeks/year **3,000** hours/year
6. Operating Capacity/Schedule Comment (limit to 200 characters): **N/A**

Emissions Unit Information Section 1 of 1

B. EMISSION POINT (STACK/VENT) INFORMATION

Emission Point Description and Type

1. Identification of Point on Plot Plan or Flow Diagram? **Cyclones #1 - #27**	2. Emission Point Type Code: **3**

Descriptions of Emission Points Comprising this Emissions Unit for VE Tracking (limit to 100 characters per point): **Emissions Unit 005 consists of 25 existing cyclones and 2 additional proposed cyclones as well as 4 natural-gas fired heaters.**

4. ID Numbers or Descriptions of Emission Units with this Emission Point in Common:

5. Discharge Type Code:	6. Stack Height: feet	7. Exit Diameter:
8. Exit Temperature: °F	9. Actual Volumetric Flow Rate: acfm	10. Water Vapor: %

11. Maximum Dry Standard Flow Rate: dscfm	12. Nonstack Emission Point Height: feet

13. Emission Point UTM Coordinates:

Zone: East (km): North (km):

14. Emission Point Comment (limit to 200 characters):

See Revised Facility Plot Plan for location of all emission points (cyclones).

Emissions Unit Information Section 1 **of** 1

C. SEGMENT (PROCESS/FUEL) INFORMATION

Segment Description and Rate: Segment 1 **of** 1

1. Segment Description (Process/Fuel Type) (limit to 500 characters): **Industrial Process: Food and Agriculture: Cotton Ginning: General-Entire Process, Sum of Typical Equipment Used. Bale Cotton Process**		
1. Source Classification Code (SCC): **1-02-004-10**	3. SCC Units: **Bale Cotton Process**	
4. Maximum Hourly Rate:**N/A**	5. Maximum Annual Rate: **60,000**	6. Estimated Annual Activity Factor: **N/A**
7. Maximum % Sulfur **N/A**:	8. Maximum % Ash: **N/A**	9. Million Btu per SCC Unit: **N/A**
10. Segment Comment (limit to 200 characters): **Please reference the Facility Information Section**		

Segment Description and Rate: Segment _____ **of** _____

1. Segment Description (Process/Fuel Type) (limit to 500 characters): •		
2. Source Classification Code (SCC):	3. SCC Units:	
4. Maximum Hourly Rate	5. Maximum Annual Rate:	6. Estimated Annual Activity
7. Maximum % Sulfur:	8. Maximum % Ash:	9. Million Btu per SCC Unit:
10. Segment Comment (limit to 200 characters):		

Emissions Unit Information Section 1 **of** 1

Pollutant Detail Information Page 1 **of** 1

D. EMISSIONS UNIT POLLUTANT DETAIL INFORMATION

Potential Emissions

1. Pollutant Emitted: **PM**		2. Pollutant Regulatory Code: **NS**
3. Primary Control Device Code: **007**	4. Secondary Control Device Code:	5. Total Percent Efficiency of Control:
6. Potential Emissions: lbs/hour **76.2** tons/year		7. Synthetically Limited? [**X**]
8. Emission Factor: Reference: **AP-42, Table 9.7-1**		9. Emissions Method Code: **3**
10. Calculation of Emissions (limit to 600 characters): **Since the AP-42 factors for the cotton ginning process are based upon the total throughput of material processed (bales of cotton), the changes reflected in this application are not believed to impact potential emissions.**		
11. Pollutant Potential Emissions Comment (limit to 200 characters): **N/A**		

Allowable Emissions Allowable Emissions _____ **of** _____

1. Basis for Allowable Emissions Code: **ESCTV**	2. Future Effective Date of Allowable Emissions: **ASAP**
3. Requested Allowable Emissions and Units: **< 100 TPY**	4. Equivalent Allowable Emissions: lb/hour tons/year
5. Method of Compliance (limit to 60 characters): **Limiting process to 60,000 bales (lint cotton)/year.**	
6. Allowable Emissions Comment (Desc. of Operating Method) (limit to 200 characters):	

E. VISIBLE EMISSIONS INFORMATION
(Only Emissions Units Subject to a VE Limitation)

Visible Emissions Limitation: Visible Emissions Limitation **1** of **1**

1. Visible Emissions Subtype: **VE20**	2. Basis for Allowable Opacity: [X] Rule [ ] Other
3. Requested Allowable Opacity: Normal Conditions: **20** % Exceptional Conditions: % Maximum Period of Excess Opacity Allowed: min/hour	
4. Method of Compliance: **Yearly ½ hour VE tests**	
5. Visible Emissions Comment (limit to 200 characters): **VE tests are conducted on one cyclone from the following groups: 1) Raw Cotton Unloading; 2) Ginning, 3) Lint cleaning and baling/Trash and mote system; and, 4) Trash handling (as described in EU 005) processes deemed to have the highest visible emissions in each group. Test to be conducted during the first month of each ginning season in accordance with DEP Method 9.**	

F. CONTINUOUS MONITOR INFORMATION
(Only Emissions Units Subject to Continuous Monitoring)

Continuous Monitoring System: Continuous Monitor **N/A** of _____

1. Parameter Code:	2. Pollutant(s):
3. CMS Requirement:	[ ] Rule [ ] Other
4. Monitor Information: Manufacturer: Model Number: Serial Number:	
5. Installation Date:	6. Performance Specification Test Date:
7. Continuous Monitor Comment (limit to 200 characters):	

G. EMISSIONS UNIT SUPPLEMENTAL INFORMATION

Supplemental Requirements

1. Process Flow Diagram [X] Attached, Document ID: **Attach. #3 & 4**[ ] Not Applicable [ ] Waiver Requested
2. Fuel Analysis or Specification [ ] Attached, Document ID: [X] Not Applicable [ ] Waiver Requested
3. Detailed Description of Control Equipment [**X**] Attached, Document ID**:** **Attach. #6** [ ] Not Applicable [ ] Waiver Requested
4. Description of Stack Sampling Facilities [ ] Attached, Document ID: [X] Not Applicable [ ] Waiver Requested
5. Compliance Test Report [ ] Attached, Document ID:_____ [X] Previously submitted, Date: **12/07/2011** [ ] Not Applicable
6. Procedures for Startup and Shutdown [ ] Attached, Document ID:_____ [X] Not Applicable [ ] Waiver Requested
7. Operation and Maintenance Plan [ ] Attached, Document ID:_____ [ ] Not Applicable [X] Waiver Requested
8. Supplemental Information for Construction Permit Application [ ] Attached, Document ID: [X] Not Applicable
9. Other Information Required by Rule or Statute [ ] Attached, Document ID:_____ [X] Not Applicable
10. Supplemental Requirements Comment: **Burkhead Gin is including new drawings for the revised portions of the operation as requested in this permit application and requests waivers on providing detailed description of unchanged control equipment that is currently on file with the FDEP and will not change with the submittal of this air construction permit application.**

ATTACHMENT 1
EMISSION CALCULATIONS

Attachment 1

Emissions Calculations

PM Emissions from ginning

Using emissions factors from AP- 42 table 9.7-1

Unloading fan (SCC 3-01-004-01)	0.29 lb/bale
No. 1 dryer and cleaner (SCC 3-02-004-20)	0.36
No. 2 dryer and cleaner (SCC 3-02-004-21)	0.24
Lint cleaners (SCC 3-02-004-07)	0.58
Mote fan (SCC 3-02-004-36)	0.28
Mote trash fan (SCC 3-02-004-36)	0.077
Battery Condenser (SCC 3-02-004-08)	0.17
Master trash fan (SCC 3-02-004-03)	0.54
Total	**2.537 lb/bale**

The 2 new cyclones (#26 & #27) are being added as upgrades to emissions control. They will become part of EU 005 and represent an emissions improvement to the Battery Condenser (SCC 3-02-004-08). The emission rates shown above are believed to be conservatively high since the 2 new cyclones will replace the current dust house. Moving Cyclone #25 to the mote house to augment reclaiming the maximum amount of trash in the final stage is also considered an environmental improvement and consistent with the above calculations of potential emissions.

With a limit of 60,000 bales/year potential PM emissions are:

PM = (60,000 bales/yr x 2.537 lb/bale)/2,000 = 76.1 TPY

Combustion Emissions from Air Heaters

Burkhead gin uses 4 air heaters totaling 12 MM BTUH heat input

Fuel is natural gas

Their records indicate that facility uses 147 CF of natural gas/bale of cotton

60,000 bales/yr max. x 147 CF/bale = 8.8 MM CFY

Calculating potential emissions from natural gas fired air heaters:

Hourly fuel usage is 12 MM BTUH / 1,050 BTU/CF = 0.011 MM CFH

Emissions factors from combustion of natural gas (SCC 1-03-006-03)

PM=	7.6 lb/MM CF burned
S02=	0.6 lb/MM CF burned
NOX=	100 lb/MM CF burned
CO=	84 lb/MM CF burned
VOC=	5.3 lb/MM CF burned

Proposed maximum hours of operation are 3,000 hr/yr.

PM =7.6 x 0.011 x 3,000/2,000 = 0.13 TPY

SO2 = 0.6 x 0.011 x 3,000/2,000 = negligible

NOX = 100 x 0.011 x 3,000/2,000 = 1.7 TPY

CO = 84 x 0.011 x 3,000/2,000 = 1.39 TPY

VOC = 5.3 x 0.011 x 3,000/2,000 = 0.1 TPY

All regulated pollutants resulting from these natural gas fired air heaters are less than 5 TPY and therefore qualify to be exempted from permitting in accordance with Rule 62-210.300(b)1, F.A.C.

Total PM emissions from the facility are 76.1 TPY from ginning + 0.13 TPY from heaters = 76.2 TPY.

ATTACHMENT 2
REVISED FACILITY PLOT PLAN

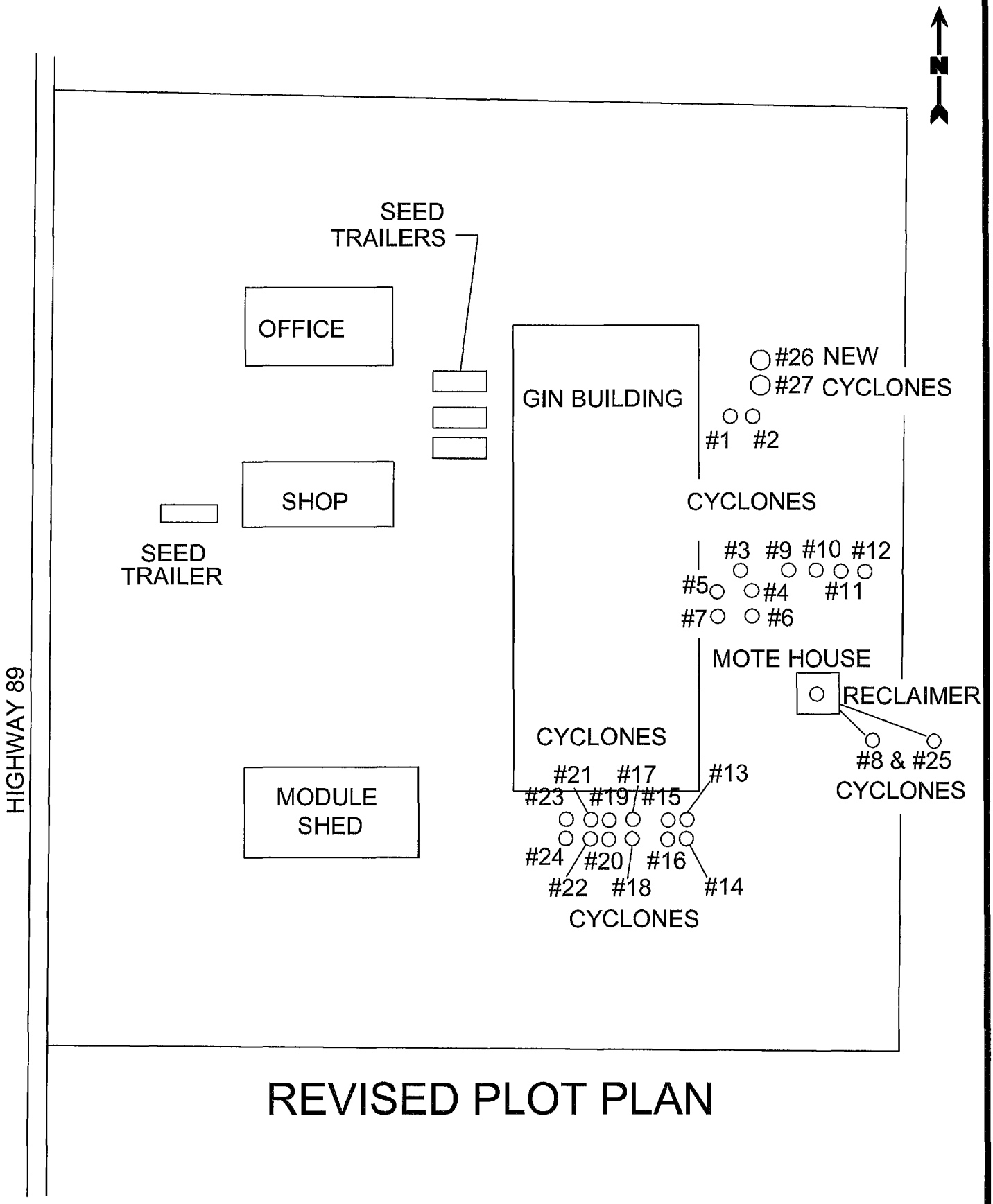

REVISED PLOT PLAN

BURKHEAD GIN COMPANY
JAY, FLORIDA

DATE: 10/23/12
SCALE: NONE

ATTACHMENTS 3 & 4

BLOCK FLOW DIAGRAMS – PROCESS CHANGES

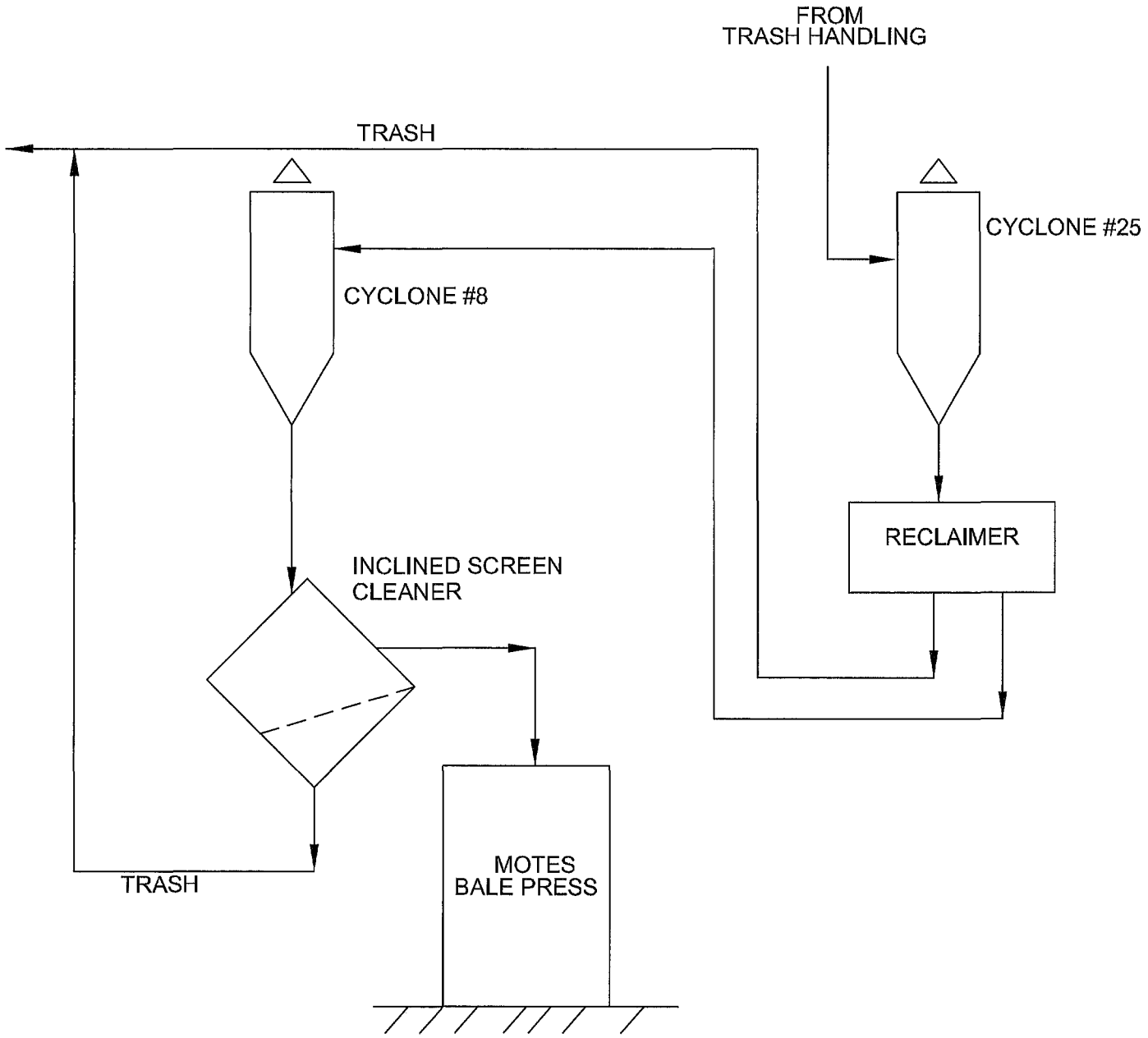

PROCESS SCHEMATIC
TRASH & MOTES

BURKHEAD GIN COMPANY
JAY, FLORIDA

DATE: 10/23/12
SCALE: NONE

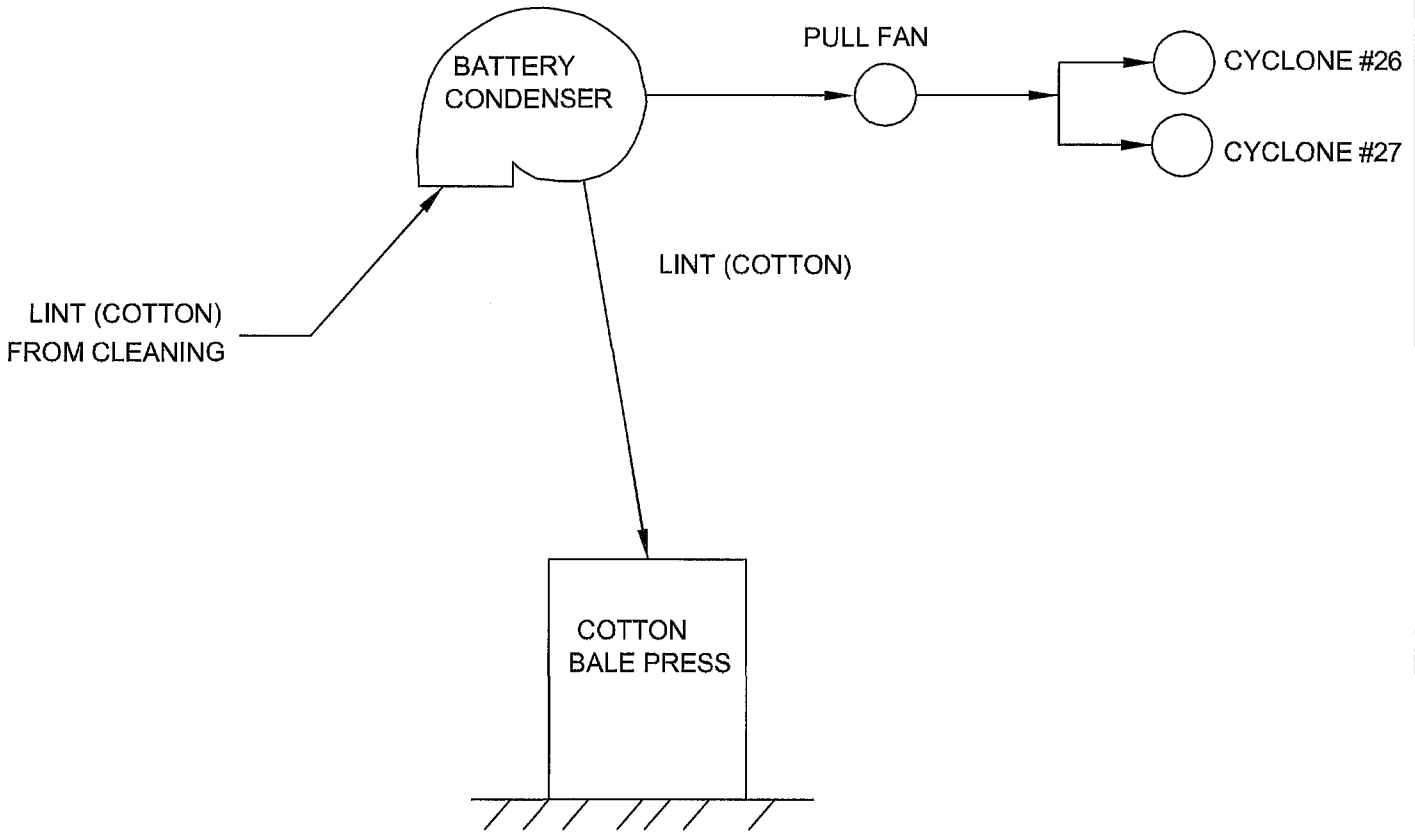

PROCESS SCHEMATIC
LINT (COTTON) PRESSING (BALING)

BURKHEAD GIN COMPANY
JAY, FLORIDA

DATE: 10/16/12
SCALE: NONE

ATTACHMENT 5

VENDOR DATA – NEW CYCLONES

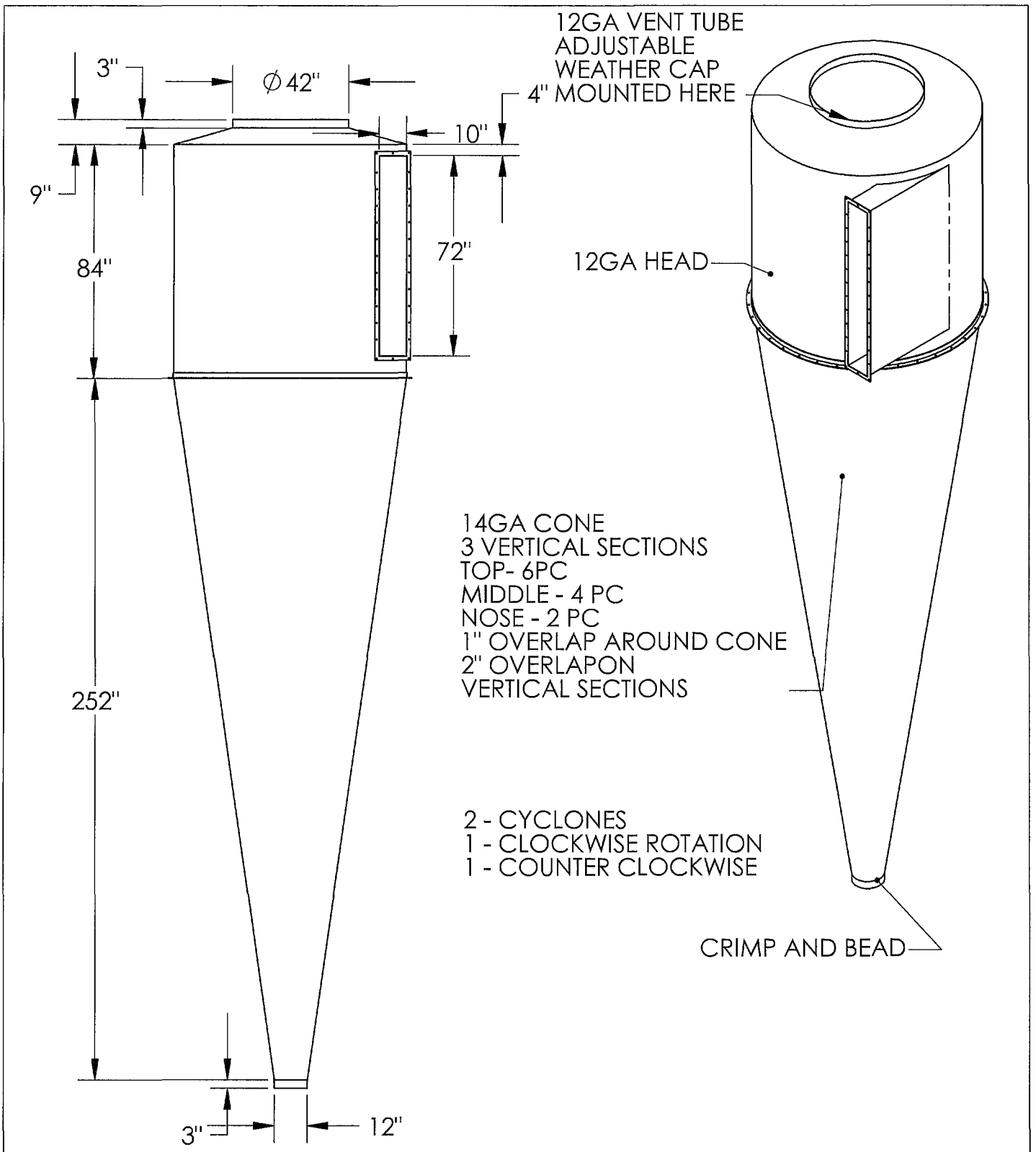

		DIMENSIONS ARE IN INCHES TOLERANCES: FRACTIONAL ± ANGULAR: MACH ± BEND ± TWO PLACE DECIMAL ± THREE PLACE DECIMAL ±		NAME	DATE
			DRAWN		
			CHECKED		
			ENG APPR.		
			MFG APPR.		
		MATERIAL	Q.A.		
			COMMENTS:		
NEXT ASSY	USED ON	FINISH			
APPLICATION		DO NOT SCALE DRAWING			

PROPRIETARY AND CONFIDENTIAL
THE INFORMATION CONTAINED IN THIS DRAWING IS THE SOLE PROPERTY OF <INSERT COMPANY NAME HERE>. ANY REPRODUCTION IN PART OR AS A WHOLE WITHOUT THE WRITTEN PERMISSION OF <INSERT COMPANY NAME HERE> IS PROHIBITED.

SIZE	DWG. NO.	REV.
A	84 CYCLONE1	
SCALE:1:48	WEIGHT:	SHEET 1 OF 1

REVISIONS				
ZONE	REV.	DESCRIPTION	DATE	APPROVED

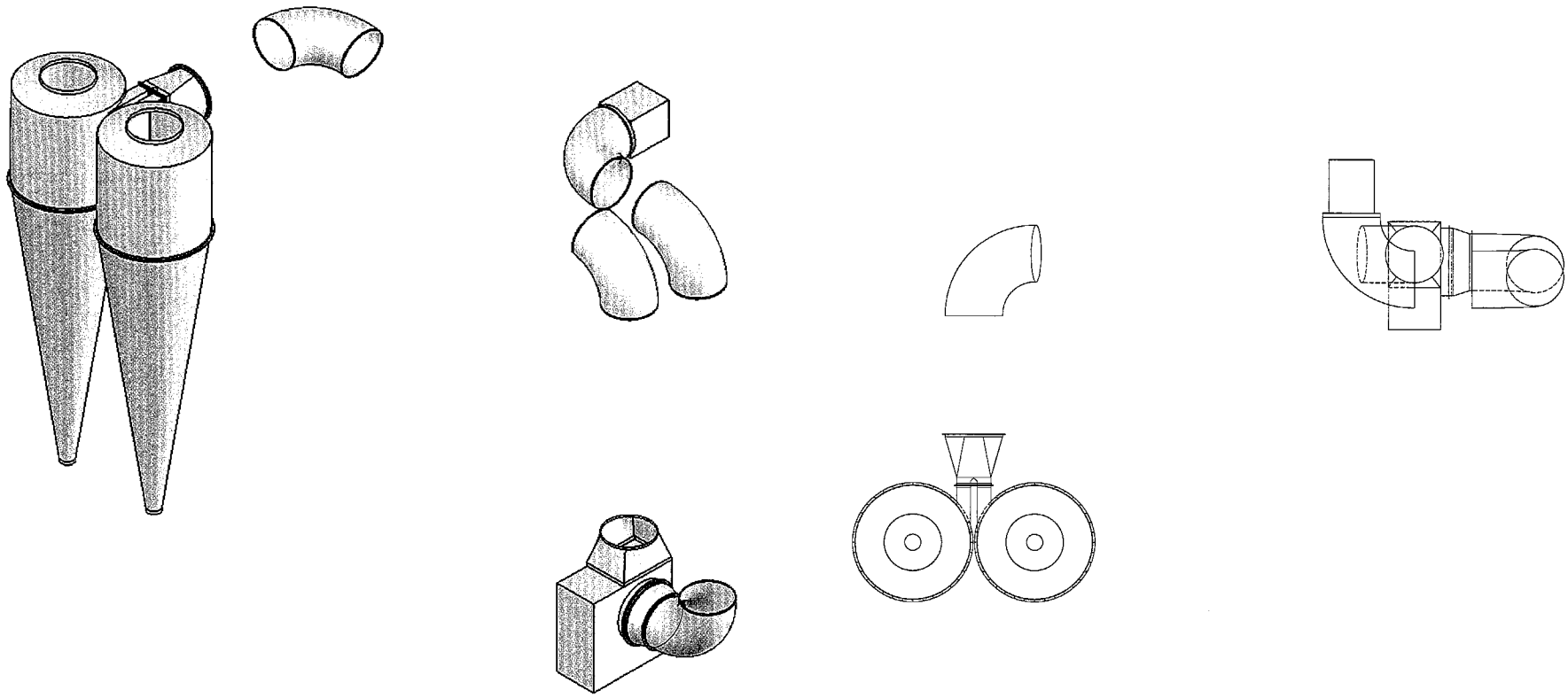

PROPRIETARY AND CONFIDENTIAL

THE INFORMATION CONTAINED IN THIS DRAWING IS THE SOLE PROPERTY OF ESCOFAB INC. ANY REPRODUCTION IN PART OR AS A WHOLE WITHOUT THE WRITTEN PERMISSION OF ESCOFAB INC. IS PROHIBITED.

		UNLESS OTHERWISE SPECIFIED:		DATE	NAME
		DIMENSIONS ARE IN INCHES TOLERANCES: FRACTIONAL ±1/32" ANGULAR: MACH ±0.5° BEND ±1° TWO PLACE DECIMAL ±0.01" THREE PLACE DECIMAL ±0.005"	DRAWN		
			CHECKED		
			ENG APPR.		
			MFG APPR.		
		INTERPRET GEOMETRIC TOLERANCING PER:	Q.A.		
		MATERIAL —	COMMENTS:		
NEXT ASSY	USED ON	FINISH —			
APPLICATION		DO NOT SCALE DRAWING			

DESCRIPTION

TITLE:

GENERAL ASSEM

SIZE	DWG. NO.	REV
C		

SCALE: 1:12 WEIGHT: SHEET 1 OF 1

ATTACHMENT 6

DETAILED DESCRIPTION OF CONTROL EQUIPMENT

ATTACHMENT 6

DETAILED DESCRIPTION OF CONTROL EQUIPMENT

EU ID No. 005 – Cotton Gin Operations

The cotton ginning facility consists of the following processes: raw cotton unloading, seed cotton drying and cleaning, ginning, lint cleaning and baling, seed handling, trash and mote system, and trash handling. Seed cotton is pneumatically conveyed through dryers, gins and cleaners to remove seeds and trash. Cleaned (lint) cotton is baled as the final product. Natural gas-fired heaters are used to dry the seed cotton during unloading and conveying processes.

Particulate emissions from the cotton gin operations are controlled by cyclones. Ginning operations and associated cyclones are listed in the following tables.

Raw Cotton Unloading		
Cyclone #	**Diameter (inches)**	**Process**
1	48	Unloading System Suction
2	48	Unloading System Suction

Ginning		
Cyclone #	**Diameter (inches)**	**Process**
3	32	Trash and Mote Removal from Seed Cotton

Lint Cleaning and Baling / Trash and Mote System		
Cyclone #	**Diameter (inches)**	**Process**
4,5,6,7	36	Trash and Mote Removal from Lint Cleaners
8	60	Trash and Mote separation
25	24	Trash and Mote reclaiming
9, 10, 11, 12	60	Nit Removal from Lint Cleaners
26, 27	84	Dust Removal from Lint Cleaning

Trash Handling		
Cyclone #	**Diameter (inches)**	**Process**
13, 14, 15, 16, 17, 18, 19, 20, 21, 22, 23, 24	48	Trash Removal from Trash Plenum