TECHNICAL EVALUATION
&
PRELIMINARY DETERMINATION

APPLICANT

Duke Energy Florida, Inc. (DEF)

1601 Weedon Island Drive
St. Petersburg, Florida 33702

Bartow Power Plant
Facility ID No. 1030011

PROJECT

Project No. 1030011-021-AC
Application for Minor Source Air Construction Permit
Replacement of L-0 Blades on the Unit 4 Steam Turbine

COUNTY

Pinellas County, Florida

PERMITTING AUTHORITY

Florida Department of Environmental Protection
Division of Air Resource Management
Office of permitting and Compliance
2600 Blair Stone Road, MS#5505
Tallahassee, Florida 32399-2400

July 25, 2014

1. GENERAL PROJECT INFORMATION

1.1. Air Pollution Regulations

Projects at stationary sources with the potential to emit air pollution are subject to the applicable environmental laws specified in Section 403 of the Florida Statutes (F.S.). The statutes authorize the Department of Environmental Protection (Department) to establish regulations regarding air quality as part of the Florida Administrative Code (F.A.C.), which includes the following applicable chapters: 62-4 (Permits); 62-204 (Air Pollution Control – General Provisions); 62-210 (Stationary Sources – General Requirements); 62-212 (Stationary Sources – Preconstruction Review); 62-213 (Operation Permits for Major Sources of Air Pollution); 62-296 (Stationary Sources - Emission Standards); and 62-297 (Stationary Sources – Emissions Monitoring). Specifically, air construction permits are required pursuant to Chapters 62-4, 62-210 and 62-212, F.A.C.

In addition, the U. S. Environmental Protection Agency (EPA) establishes air quality regulations in Title 40 of the Code of Federal Regulations (CFR). Part 60 specifies New Source Performance Standards (NSPS) for numerous industrial categories. Part 61 specifies National Emission Standards for Hazardous Air Pollutants (NESHAP) based on specific pollutants. Part 63 specifies NESHAP based on the Maximum Achievable Control Technology (MACT) for numerous industrial categories. The Department adopts these federal regulations in Rule 62-204.800, F.A.C.

1.2. Facility Description and Location

Duke Energy Florida, Inc. (DEF) operates the P.L. Bartow Plant, which is an existing power plant (SIC No. 4911). The plant is located on Weedon Island on the eastside of St. Petersburg, Pinellas County. The location with respect to other DEF facilities in Florida is shown in **Figure 1**. Also shown is the location of Weedon Island within Tampa Bay.

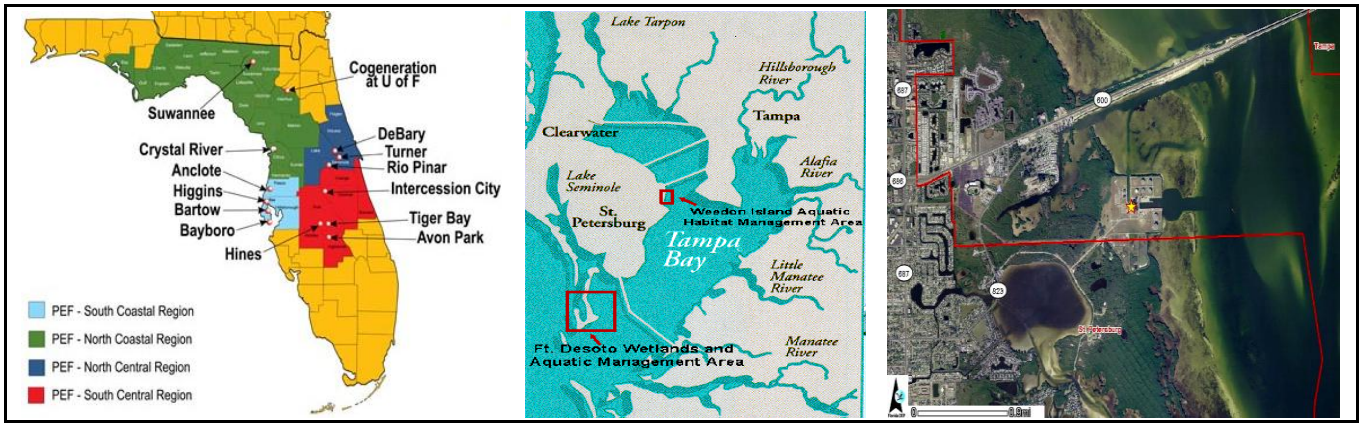

Figure 1. Bartow Power Plant in DEF System and Location of Weedon Island and Plant.

The plant is located approximately 83 km south of the PSD Class I Chassahowitzka Wilderness Area. The facility UTM coordinates are Zone 17, 342.4 kilometers (km) East and 3,082.6 km North. The P.L. Bartow Power Plant includes the following emissions units.

- Four 59 megawatts (MW) General Electric MS7000 simple cycle gas turbine peaking units, designated as Nos. P-1, P-2, P-3 and P-4 (EU 005-008);
- Combined cycle Unit 4 rated at approximately 1,280 MW and comprised of four 215 MW Siemens SGT6-5000F combined cycle gas turbine-electrical generators (CTs), four duct-fired heat recovery steam generators (HRSGs) (EU 038 - 041);
- Four 3 MMBtu/hr natural gas fired process heaters (EU 044);
- Two 3,500,000 diesel fuel storage tanks (EU 045);
- One 300 HP diesel fueled emergency fire pump (EU046); and

- Various insignificant emissions units.

The steam generated in the four Unit 4 HRSGs is used in a single nominal 420 MW steam turbine-electrical generator (STEG). The actual capacity according to DEF is 450 MW.

1.3. Facility Regulatory Categories

- The facility is a major source of hazardous air pollutants (HAP).
- The facility is a Title V major source of air pollution in accordance with Chapter 213, F.A.C.
- The facility is a major stationary source (PSD-major source) in accordance with Rule 62-212.400, F.A.C.
- The facility operates units subject to the Standards of Performance for New Stationary Sources (NSPS) pursuant to 40 Code of Federal Regulations (CFR) Part 60.
- The facility operates units subject to the National Emissions Standards for Hazardous Air Pollutants (NESHAP) pursuant to 40 CFR Part 63.
- The facility operates units subject to the Acid Rain provisions of the Clean Air Act.
- The facility is identified as a major source of greenhouse gases (GHGs).
- The facility operates units subject to the Federal Clean Air Interstate Rule (CAIR) in accordance with the Final Department Rules issued pursuant to CAIR as implemented by FDEP in Rule 62-296.470, Florida Administrative Code (F.A.C.).
- The facility is located in an area that is designated as "attainment", "maintenance", or "unclassifiable" for each pollutant subject to a National Ambient Air Quality Standard pursuant to Rule 62-204.340, F.A.C.
- The facility was <u>not</u> certified pursuant to Siting under 403.501-519, F.S. or Chapter 62-17, F.A.C.

1.4. Process Description and Emissions

Figure 2 is an aerial photograph of Unit 4. The four main exhaust stacks are in the foreground. Four bypass stacks are in the background and are used when the CTs operate in simple cycle mode.

Figure 2. Duke P.L. Bartow Combined Cycle Unit 4 (~1,280 MW)

Figure 3 is a simplified process flow diagram for Unit 4. Fuel is burned in the four CTs. The mechanical energy produced operates the compressor section of each CT and also drives an electric generator. Each CT generator set is rated at approximately 215 MW. The generation capacity is highly dependent upon ambient conditions. The turbine exhaust gas (TEG) exists the CTs at temperatures in the range of 1,100 degrees Fahrenheit (°F) and with an oxygen (O_2) content of approximately 12-13 percent (%).

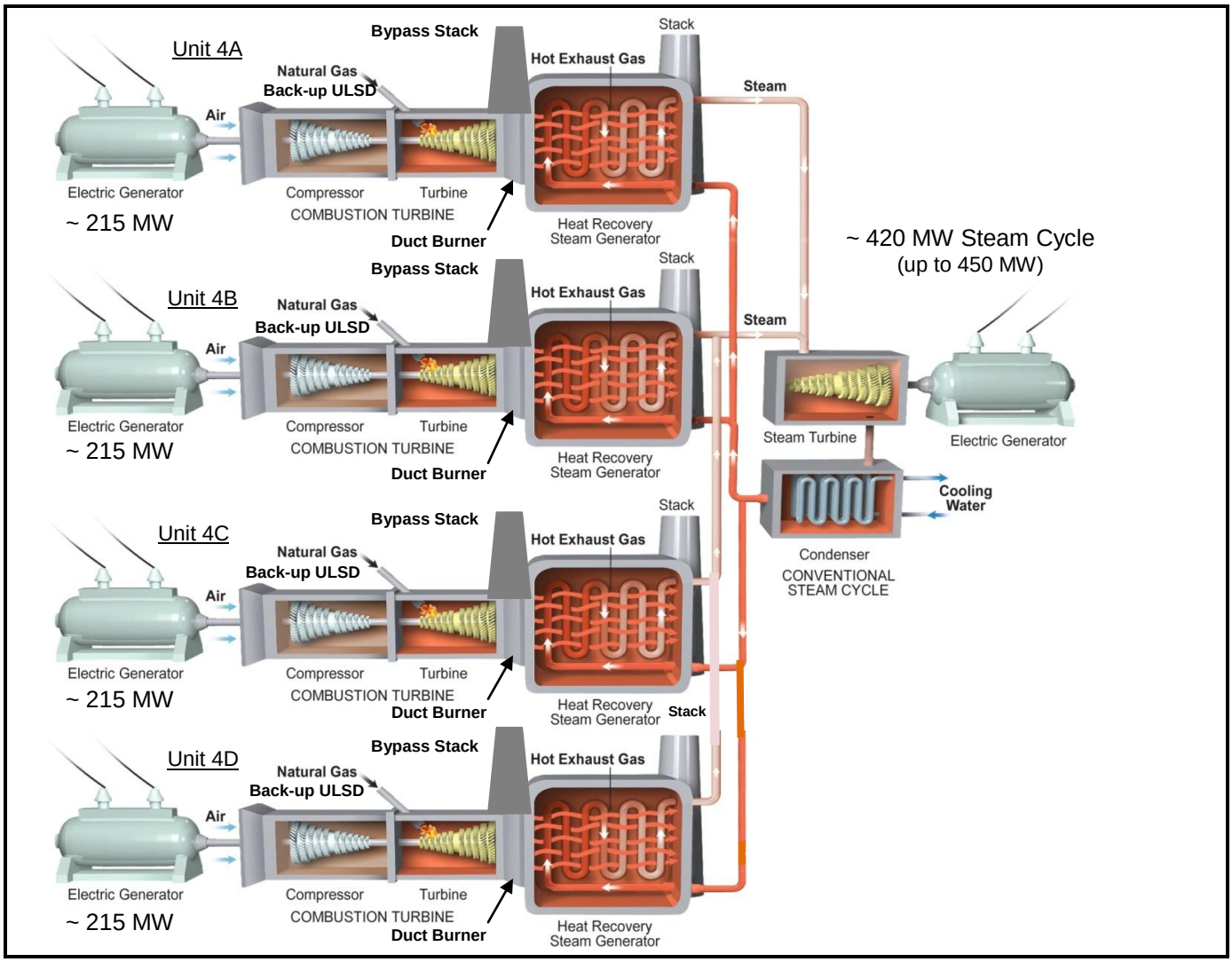

Figure 3. Process Flow Diagram for Cycle Unit 4 ("4 on 1" Combined Cycle).

TEG can exit via the bypass stacks as shown in the diagram or can enter the HRSGs, which are waste heat boilers that produce steam. In the case of Unit 4, the HRSGs include natural gas-fueled duct burners that use the hot, oxygen-rich TEG as combustion air to further increase temperature and the steam generation capacity of each HRSG. The high temperature, high pressure steam produced in the HRSGs then enters a conventional steam turbine-electric generator (STG) to produce approximately 420 MW of electricity.

Construction on Unit 4 commenced in 2007 and commercial service began in the summer of 2009. Three conventional residual fuel oil units (Units 1-3) rated at approximately 462 MW (total) were shut down before the startup of Unit 4 and were demolished in 2012. Demolition of Old Stacks The project resulted in massive reductions of conventional air pollutants as summarized in **Table 1.** Previously unregulated Greenhouse Gases (GHGs) emissions increased by approximately 50% but declined per unit of power produced from nearly 2,000 pounds of carbon dioxide per MW-hour (lb CO_2/MWH) for Units 1-3 to less than 900 lb CO_2/MWH for Unit 4.

TABLE 1 - MEASURED EMISSION REDUCTIONS SINCE THE REPLACEMENT OF UNIT 1-3 BY UNIT 4.[1]

Parameter	Emissions from Units 1-3 (tons/year)[1]	Baseline Actual Emissions - Unit 4 (tons/year)[2]
Sulfur Dioxide (SO_2)	24,816	19
Particulate Matter (PM/PM_{10})	804/559	206/59
Nitrogen Oxides (NO_X)	4,043	766
Carbon Monoxide (CO)	367	23
Volatile Organic Compounds (VOC)	57	18
Sulfuric Acid Mist (SAM)	423	26
Lead (Pb)	0.10	0.01
Greenhouse Gases (GHGs)[3]	2,227,000	3,299,000

1. Highest annual emission rates (2002-2006) from Units 1-3 prior to construction of Unit 4 (basis highest 2 years)
2. Highest month annual emission rates (2009 – 2013) from Unit 4 (basis highest 24 months).
3. CO_2 component. GHGs were not subject to regulation during operation of Units 1-3 or startup of Unit 4.

1.5. Project Description

Refer to **Figure 4**. The project is to replace the largest (i.e. the last or L-0) blades within the low pressure (LP) sections of the Unit 4 Mitsubishi turbine-electric generator (STG). Refer to **Figure 5** that shows internal views of a similar purpose Siemens STG. The L-0 blades are indicated and are the last blades used to recover the expansion energy from the steam cycle.

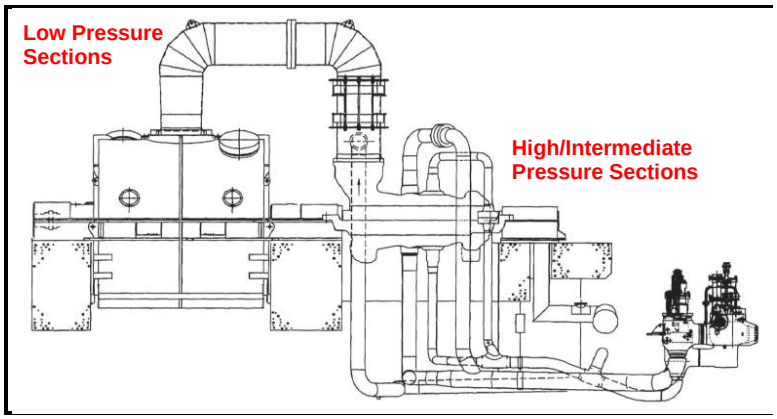

Figure 4. Outline of the Unit 4 Mitsubishi STG.

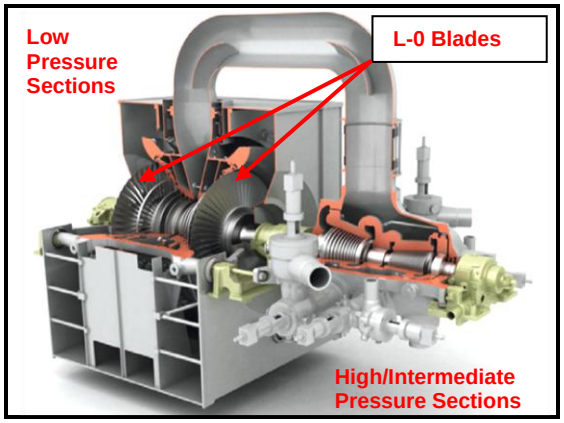

Figure 5. View Siemens STG Internals.

According to the application cover letter submitted by Duke on July 7, 2014:

> *"During a routine inspection of the L-0 blades in March 2012, damage to the original equipment manufacturer blades was discovered. DEF decided to voluntarily "de-rate" the STG in order to avoid catastrophic damage. The blades will be replaced with new blades capable of reaching the original design capacity without causing damage to the blade".* Duke Application

Further details are given with the short report accompanying the application as follows:

"Power Block 4 began to commercially operate on June 1, 2009 and in March 2012 DEF conducted a ***routine maintenance and inspection outage*** *on the steam turbine. During this inspection cracks were discovered in the "****snubber****" section of a large percentage of the L-0 turbine blades. The damaged steam turbine blades were removed and replaced with identical blades and the damaged blades were sent to Mitsubishi, the Original Equipment Manufacturer (OEM), for closer examination and testing in order to determine the root cause of the crack development in the '****snubber****'.*

*"Because the cause of the "****snubber****" cracking was being investigated but had not yet been identified, DEF made the decision to mitigate the possibility of catastrophic failure of the replacement L-0 turbine blades by limiting the operation of the steam turbine to an output of only 400 MW.*

*"The output limitation on the steam turbine eliminated the firing of the duct burners. DEF continued to work with Mitsubishi in order to identify the cause of the L-0 turbine blades "****snubber****" cracking and in October 2013 Mitsubishi announced a root cause for the "****snubber****" cracking had been identified and a solution had been developed. The solution involved modifying the base of the "****snubber****" section of the turbine blade, but no changes were made to materials, shape or dimensions of the turbine blade that would result in an increase efficiency or output above its original design of 450 MW.*

"It is important to note that the steam turbine did operate a number of times at or near 450 MW between June 2009 and March 2012 when the load demand was present".

1.6. Function of Snubber (Tie-Boss)

To gain a better understanding of the role of snubbers within the LP section of a STG, the Department reviewed a recent article published in Power Magazine titled, "The Long and Short of Last Stage Blades (LSBs)". PowerMag Article The referenced figures are General Electric (GE) products. According to the article:

"Aeroelastic instability, which occurs at extreme conditions either in the region of low steam flow or at high condenser pressure, produces significant flow separation at the blade hub, resulting in stall flutter and buffeting of the blades. To improve operational flexibility and provide greater rigidity, adjacent blades are linked together. The blades are integrally shrouded with the blade profiled body.

"To further increase the rigidity of the entire blade structure, the blades are coupled with a ***snubber****, an integral* ***tie-boss*** *at the mid-span of the blade height. The use of titanium alloy blades with reduced damping properties makes a change in blade manufacturing from free-standing to interlocked construction an unavoidable necessity.*

"During turbine operation, the blade elastically untwists due to centrifugal forces, causing adjacent shrouds and ***snubbers*** *to make contact. At rated speed, all blades are held together to form a continuous ring. Compared with conventional configurations, this arrangement exhibits more stable vibration characteristics: reduced resonance and vibration stresses and suppressed flutter. In one application, blades with integral shroud and* ***tie-bosses*** *situated at 70% of the blade height exhibit two to three times less vibrational stress than do free-standing blades (****Figure 6****).*

"The use of shrouds and ***snubbers*** *does not come without penalties. Free-standing blades provide a more efficient peripheral water separation than do shrouded blades. The* ***snubbers*** *in the flow channel disrupt the flow, creating additional losses and increased erosion due to local wetness concentration.*

*"Another difficulty encountered by the designers of advanced, larger LSBs is associated with the machining of the complex 3-D shape of the blade. The mechanical design has to determine the "no speed" airfoil shape that will achieve the aerodynamic design shape at nominal operating conditions. The mechanical design challenges center on converting the aerodynamic design into a machine-workable shape and providing sufficient margins for static and dynamic loads (****Figure 7****)".*

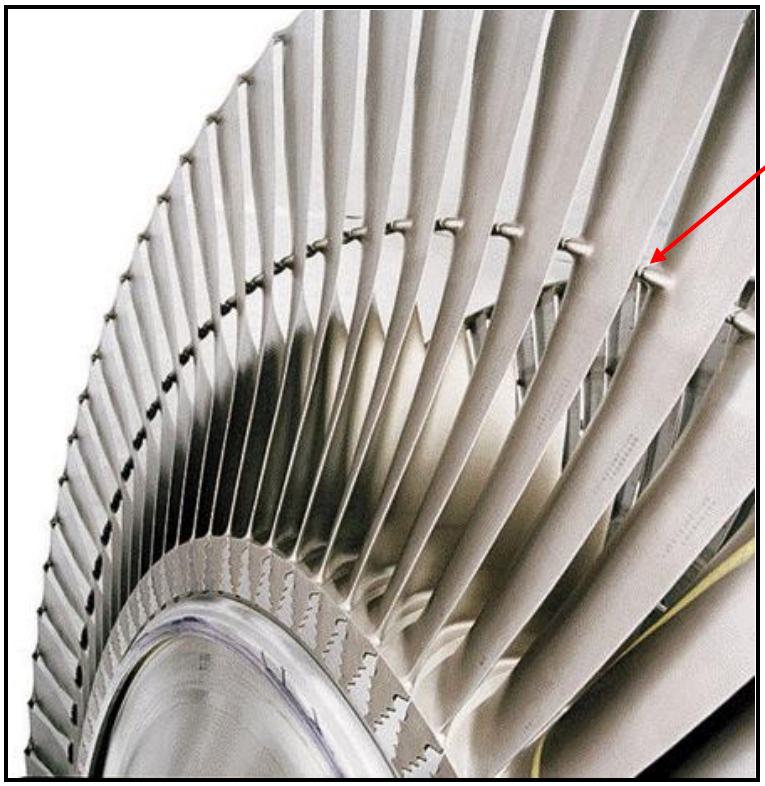

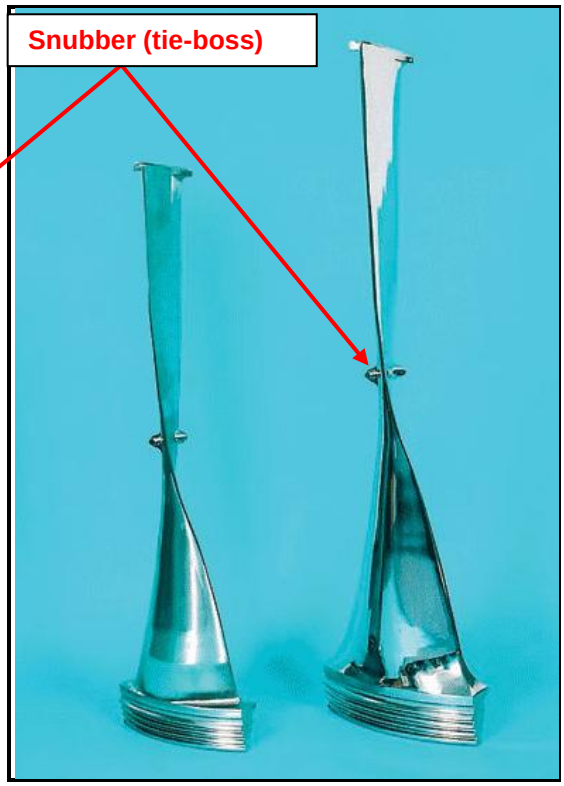

Figure 6. Blade Shroud, Span Damper Design on GE LSB **Figure 7. Advanced Aerodynamic GE LSBs**

According to a Hitachi reference, "Development of Long Blades with Continuous Cover Blades (CCB) Structure for Steam Turbines":

> *"In the CCB structure we have significantly relieved the stress concentrations by integrally forming the connecting members – the shroud covers and* ***tie-bosses*** *– with the blades.*
>
> *"By integrating the connecting members with the blades, the untwisting of the blades, which is caused by centrifugal forces when the blades rotate, is restrained by the contact surfaces of adjacent covers and tie-bosses between blades. As a result, all the blades are held together to form a continuous ring of blades. One of the chief advantages over conventional grouped blades (made up of several units of several blades each) is that the continuous blade structure has fewer resonance points during rotation".* Hitachi Document

Longer blades as well as shroud covers and snubbers (tie-bosses) are fairly recent innovations compared with the previous technology that was based on tenons, caulked shrouds and tie wires.

One final consideration is that many modern STG designs incorporate single-flow axial exhaust (SFAE) instead of the downward exhaust that was shown in Figure 4 above. According to an EPRI document:

> *"Though the SFAE steam turbine appears to have many cost advantages over the traditional double-flow downward exhaust steam turbine, one must not overlook that a longer last stage blade with larger annulus area is required. Since these longer, newer blades have been in service a relatively short time, consideration must be given to impacts on reliability and durability. The decision of selecting a double-flow downward exhaust turbine with established blades versus a single-flow axial exhaust turbine with newer blades must account for the reliability uncertainty of the newer blades".* EPRI Document

The purpose of the foregoing discussion is to provide the reader with a full understanding of the purpose of the project as well as the state of the technology related to LSBs in the LP turbines of STGs. Basically the entire area is under development as larger STGs become the norm in combined cycle applications.

1.7. Processing Schedule

07/07/2014: Department received complete application for an air construction permit.

07/25/2014: Distributed Intent to Issue Air Permit package.

2. PSD APPLICABILITY PROCEDURES

2.1. General PSD Description

The Department regulates major stationary sources in accordance with Florida's PSD program pursuant to Rule 62-212.400, F.A.C. PSD preconstruction review is required in areas that are currently in attainment with the state and federal ambient air quality standards (AAQS) or areas designated as "unclassifiable" for these regulated pollutants. The project is located in Pinellas County, which is in an area that is currently in attainment with the state and federal AAQS or otherwise designated as unclassifiable.

The key requirement of a PSD review include: employment of Best Available Control Technology; a demonstration that the project will not cause or contribute to a violation of a state of federal AAQS or increment; and a demonstration that the project will not cause adverse impacts to Air Quality Related Values (AQRVs) such as visibility, soils and vegetation.

Commonly addressed PSD pollutants include: CO, NO_X, PM, PM_{10}, $PM_{2.5}$, SO_2, VOC, SAM, Pb, fluorides (F), and Hg. Additional PSD pollutants that are more common to certain other industries include: hydrogen sulfide (H_2S), TRS including H_2S, reduced sulfur compounds (RSC) including H_2S, municipal waste combustor (MWC) organics measured as total tetra- through octa-chlorinated dibenzo-p-dioxins and dibenzofurans (dioxin/furan), MWC metals measured as PM; MWC acid gases measured as SO_2 and HCl, and municipal solid waste (MSW) landfill emissions as non-methane organic compounds (NMOC).

Greenhouse gases (GHGs) is defined at section 40 CFR 86.1818-12(a) as the aggregate group of gases including CO_2, nitrous oxide (N_2O), methane CH_4, hydrofluorocarbons (HFCs), perfluorocarbons (PFCs), and sulfur hexafluoride (SF_6). GHGs is expressed as CO_2-equivalent (CO_2e).

2.2. Definition of a Major Stationary Source

As defined in Rule 62-210.200(Definitions), F.A.C., a stationary source is a "major stationary source" (major PSD source) if it emits or has the potential to emit (PTE):

- 250 tons per year (tons/year) or more of any PSD pollutant; <u>or</u>
- 100 tons/year or more of any PSD pollutant <u>and</u> the facility belongs to one of the 28 listed PSD major facility categories;
- For the special case of Greenhouse gases (GHGs), the facility must first be shown to emit or have a PTE of 100,000 tons/year of GHGs as carbon dioxide equivalent (CO_2e) to (possibly) be subject to regulation.[1]

The listed PSD major facility categories includes "fossil fuel-fired steam electric plants of more than 250 million British thermal units per hour heat input". The given category applies to the DEF P.L. Bartow Power Plant. The P.L. Bartow Power Plant is a major stationary source based on actual emissions of and potential to emit 100 tons/year or more of several individual PSD pollutants.

If GHG emissions expressed as CO_2e emissions are greater than 100,000 tons/year, then the total (unweighted) GHG mass emissions are compared with the 100 and 250 tons/year thresholds to determine whether the source is a major stationary source.[2]

---

[1] In making this calculation, the values listed in 40 CFR 98, Subpart A, Table A-1 are used to weight emissions by their respective Global Warming Potential (GWP). For example, the current GWP factors for four of the GHGs are: $CO_2 = 1$; $CH_4 = 25$; $N_2O = 298$ and $SF_6 = 22{,}800$.

[2] This procedure was held to be invalid at the federal level due to a U.S. Supreme Court opinion dated June 23, 2014. Supreme Court Opinion The Department is reviewing the effects of the decision on its own rules.

Once a new facility is considered a major stationary source based on one PSD pollutant, then other PSD pollutants are reviewed for PSD applicability based on the respective Significant Emission Rate (SER) defined and specified in Rule 62-210.200, F.A.C. Each pollutant projected to be emitted at a rate equal to or greater than its respective SER is also considered to be "*significant*" and subject to PSD preconstruction review, including a BACT determination.

Refer to **Table 2**. Although a new stationary source may be "major" for a single PSD pollutant, the project must include BACT controls for any PSD pollutant that exceeds the corresponding significant emission rates (SERs) listed in the table below.

TABLE 2 - LIST OF SIGNIFICANT EMISSION RATES BY PSD-POLLUTANT. [1]

Pollutant	SER (tons/year)	Pollutant	SER (tons/year)
CO	100	NO_X	40
$PM/PM_{10}/PM_{2.5}$	25/15/10	Ozone (VOC) [2]	40
$PM_{2.5}$ (NO_X)	40	$PM_{2.5}$ (SO_2)	40
Ozone (NO_X) [2]	40	SAM	7
SO_2	40	Pb	0.6
Hg	0.1	GHGs	0 [3]

1. Excluding fluoride and pollutants specific to the Pulp and Paper industry, MWCs, MSW landfills.
2. Ozone (O_3) is regulated by its precursors (VOC and NO_X). PSD for $PM_{2.5}$ can be triggered by its precursors (NO_X and SO_2).
3. Pursuant to 40 CFR 52.21(b)(23)(ii), pollutants with no SER listed at 40 CFR 52.21(b)(23)(i) have a SER of zero tons/year.

2.3. Definition of Major Modification

"Major modifications" at major stationary sources are also subject to PSD review. According to Rule 62-210.200(Definitions), F.A.C., Major Modification (of a Major Stationary Source) is defined as follows:

(a) Any physical change in or change in the method of operation of a major stationary source that would result in a significant emissions increase of a PSD pollutant and a significant net emissions increase of that pollutant from the major stationary source. (Refer to Table 2 above)

(b) Any significant emissions increase from any emissions units or net emissions increase at a major stationary source that is significant for volatile organic compounds or nitrogen oxides shall be considered significant for ozone. (Refer to Table 2 above)

(c) A physical change or change in the method of operation **shall not include**:

1. **Routine maintenance, repair and replacement (RMRR). (**RMRR is not specifically defined).

2. - 10. These paragraphs are not relevant to this review.

(d) This paragraph is relevant to this review.

For a major modification of an existing major stationary source, the review must include a BACT determination for any PSD pollutant that exceeds the respective SER. The review must include demonstrations that the project will not cause or contribute to a violation of an AAQS or increment and that the project will not adversely affect AQRVs.

In the case of GHGs, it becomes subject to regulation at a major modification if project emissions as CO_2e are greater than 75,000 tons/year and mass GHGs exceed zero tons/year. The effects of the Supreme Court opinion about this provision on the Department's rules are also under review.

2.4. Definitions of Baseline Actual Emissions and Projected Actual Emissions

To determine whether the project causes net emissions increases equal to or greater than the respective SER (triggering PSD) requires a comparison of recent "baseline actual emissions" with future "projected actual emissions". According to Rule 62-210.200(Definitions), F.A.C., for an existing unit other than an electric steam generating unit (existing simple cycle units are not yet electrical steam generating units):

"Baseline Actual Emissions" means the rate of emissions, in tons/year of a PSD pollutant, at which the emissions unit actually emitted the pollutant during any consecutive 24-month period selected by the owner or operator within the 10-year period immediately preceding the date a complete permit application is received by the Department.

"Projected Actual Emissions" means the maximum annual rate, in tons/year, at which an existing emissions unit is projected to emit a PSD pollutant in ***any one*** *of the 5 years following the date the unit resumes regular operation after the project, or in* ***any one*** *of the 10 years following that date, if the project involves increasing the emissions unit's design capacity or its potential to emit that PSD pollutant and full utilization of the unit would result in a significant emissions increase or a significant net emissions increase at the major stationary source. One year is one 12-month period. In determining the projected actual emissions, the Department:*

(a) Shall consider all relevant information, including historical operational data, the company's own representations, the company's expected business activity and the company's highest projections of business activity, the company's filings with the State or Federal regulatory authorities, and compliance plans or orders, including consent orders; and

(b) Shall include fugitive emissions to the extent quantifiable and emissions associated with startups and shutdowns; and

(c) Shall exclude that portion of the unit's emissions following the project that an existing unit could have accommodated during the consecutive 24-month period used to establish the baseline actual emissions and that are also unrelated to the particular project including any increased utilization due to product demand growth; or

(d) In lieu of using the method set out in paragraphs (a) through (c) above, may be directed by the owner or operator to use the emissions unit's potential to emit, in tons per year.

3. DEPARTMENT DETERMINATION OF PSD APPLICABILITY

3.1. Determination Whether the Project Constitutes RMRR

P.L. Bartow Power Plant is a major stationary source (i.e., a PSD source). The first determination is whether the project is subject to provision (c) of the definition of a major modification; i.e. whether the project constitutes RMRR.

RMRR is not specifically defined. There are numerous EPA guidance memoranda that have been prepared over the years and the Department has evaluated numerous projects on a case-by-case basis. The considered the following facts:

- The construction and operation of the new Unit 4 resulted in massive reductions in conventional pollutants compared with the operation of the three units that it replaced;
- The problems with long L-0 blades in the most modern combined cycle turbines have been established and the solutions represent ongoing efforts by STG component suppliers;
- DEF took prudent measures to temporarily derate the relatively new STG while determining an appropriate solution in consultation with Mitsubishi (the supplier); and
- The self-imposed derate of the STG in 2012 thereafter reduced the opportunities to use the installed duct burners to raise additional steam in the HRSGs and resulted in less electrical energy production and somewhat less emissions than might have been realized without the temporary derate.

The replacement of damaged L-0 blades is a routine (albeit carefully considered) decision. The use of L-0 blades incorporating modified "**snubber**" base sections of the turbine blades, without changes to materials, shape or dimensions of the blade is also a routine (albeit carefully considered) decision. The newer blades are in-kind replacement with better construction of the original blades that have some design shortcomings for the operations at Unit 4.

The L-0 blades replacement project is an effort to minimize the probability of a serious (if not catastrophic) failure in a key company asset rather than an effort to increase equipment capability beyond their original design.

In the opinion of the Department's experts, replacement of the L-0 blades does not constitute a Major Modification because the project falls within the exempt category of "routine maintenance, repair and replacement (RMRR)" of a component. According to Rule 62-210.200(Definition Major Modification), F.A.C.:

3.2. Emission Calculations Submitted by DEF

The Department believes the RMRR argument is sufficient to avoid PSD without trying to prove there will not be significant emissions increases from this low emitting unit after it is repaired. However, the discussion below is included since DEF did not claim that RMRR applied. The company believes that the project (if not RMRR) does not constitute a major modification under provisions (a) and (b) of the definition.

Refer to **Table 3**, which is a summary of the analysis provided by DEF. The applicant extracted the data representative of the highest emissions during a period of 5 years and determined that the highest emissions occurred concurrently with the highest heat input during 2011-2012. It is noteworthy that original project was permitted pursuant to the PSD regulations for CO and VOC. However, the actual emissions of those two pollutants do not even reach major stationary source thresholds.

TABLE 3 - DEF'S COMPARISON OF BASELINE TO PROJECTED ACTUAL EMISSIONS AND PSD APPLICABILITY ANALYSIS.

Parameter	Baseline Actual Emissions (tons/year)[1]	Emissions with Project (tons/year)[2]	Increases due to Demand Growth (tons/year)[3]	Net Increases due to Project (tons/year)[4]	Applicable SER (tons/year)[5]	PSD Triggered (Yes/No)[6]
SO_2	19	17	~2	~0	40	No
$PM/PM_{10}/PM_{2.5}$	206/60/138	215/63/144	6/2/4	4/1/2	25/15/10	No
NO_X	766	867	87	14	87	No
CO	23	22	-1	~0	-1	No
VOC	18	18	-1	~0	-1	No
SAM	26	25	-1	~0	-1	No
Pb	0.01	0.01	0	0	0	No
GHGs (CO_2e)	3,298,957	3,433,232	78,539	55,736	0[5]	No

1. Highest 24-month emissions expressed as tons/year (2009-2013) from operation of Unit 4.
2. Projected emissions including L-0 blades replacement project.
3. Emissions increases due to demand growth.
4. Net emissions increases for comparison with the SERs.
5. On mass basis. Applies if GHGs increases as CO_2e are > 75,000 tons/year.

According to the analysis prepared by DEF the project does not constitute a Major Modification as defined in Rule 62-210.200(Definitions), F.A.C. and does not trigger PSD.

Because the project is not subject to PSD based on the determination by the Department that it constitutes RMRR, the reporting provisions in Section 62-212.300(1)(e), F.A.C., do not apply to this project. However, DEF provides all the information of this otherwise applicable requirement through its routine reporting to the Department and EPA. The reporting includes submittals to the EPA Air Market Website and the Annual Operating Reports (AORs) required by Department rules and permits.

4. PRELIMINARY DETERMINATION

The Department makes a preliminary determination that the project is not a major modification and that it will comply with all applicable state and federal air pollution regulations as conditioned by the draft permit. This determination is based on a technical review of the complete application, reasonable assurances provided by the applicant, and the conditions specified in the draft permit. No air quality modeling analysis is required because the project does not result in a significant increase in emissions. Al Linero is the project engineer responsible for reviewing the application and drafting the air construction permit revision. Additional details of this analysis may be obtained by contacting the project engineer at the Department's Office of Permitting and Compliance at Mail Station #5505, 2600 Blair Stone Road, Tallahassee, Florida 32399-2400.