RECEIVED
AUG 26 2011
ENV. PROT. COMM. OF H.C.

AIR-CLEAR, LLC
OPERATIONS AND MAINTENANCE (O&M) MANUAL
AC PROJECT NO. E6001J1

-FOR-

BLACKLIDGE EMULSIONS

March 2011

-SUPPLIED BY-

AIR-CLEAR, LLC
P.O. BOX 85
KIRKWOOD, DE 19708

TABLE OF CONTENTS

SITE SPECIFIC REQUIREMENTS 1

SYSTEM DESCRIPTION 2

PROCESS DESIGN PARAMETERS 3

SCHEDULED MAINTENANCE ACTIVITIES. 3

PROCESS FLOW 4

COMPONENT DESCRIPTION 5

CONTROL INSTRUMENTATION PACKAGE 6

SEQUENCE OF OPERATION 7

PRE-START, SYSTEM STARTUP, & SHUTDOWN 8

SAFETY PROCEDURES 9

MAINTENANCE 10

SYSTEM MALFUNCTIONS & CORRECTIVE ACTIONS 12

CARBON ADSORBER OP. MAINT. & MONITORING PLAN 15

CARBON SYSTEM DESCRIPTION, DESIGN, MAINTENANCE 15

CARBON INSTALLATION 16

CARBON STARTUP, MANUFACTURE'S INFO 18

LOG SHEETS

Carbon System Start-Up Log Sheet 23
Air Clear System Log Sheet 24

SITE SPECIFIC REQUIREMENTS

Per specific requirements of the Operation Permit (570461-AO) assigned to Blacklidge Emulsions facility at 2701 E. Second Ave, the following operating checks and frequencies listed below will need to be adhered to while operating the AIR-CLEAR system.

Pressure Drop Operation Check

Two magnehelic brand gages located next to the inlet side of the system are to be **checked and recorded daily**. The gages record pre-filter and main filter pressure drop. It is important to note that the main filters require maintenance when the press. drop reaches approximately 12" WC. The main filter press. gage is the left gage. See attachment at end of O&M for gage specs. See pg.3.

Temperature Chart Recorder

The temperature chart recorder shall be **checked for operation daily**. The recorder charts are to be **changed weekly**. The recorder chart instrument is a Dickson brand KT8 series recorder. Supplies can be found at www.dicksonweb.com or www.dicksondata.com . Temperature charts are to be filed in the office and available for inspection at any time. The chart recorder is to be calibrated by the manufacturer **every six months**. A calibration services order sheet is included at the end of the O & M manual. see Attachment.

Spare Parts to be Kept On-site

The following shall be kept on site for maintenance:

Fiber bed diffusion filters -24 X 24 X 36 - 1 set - no part number

Dickson red ink pens -P222

Dickson 8" charts - 7 day C450

SYSTEM DESCRIPTION

The AIR-CLEAR Fiber-bed Coalescing System has been designed to control oil mist from asphalt Tanks. The exhaust contains oil mist and possible particle sizes ranging from submicron and larger. The Air-Clear Fiber-bed Coalescing System uses Fiber-bed diffusion filters to collect these particulate and liquid mists. The objective is to control the resulting emissions opacity.

Air-Clear systems use Fiber-bed diffusion filters to collect the submicron particulate that is the cause of opacity. Fiber-bed filters are designed specifically for liquid mists, and are designed to drain collected liquids continuously. They have been used successfully for many years to control submicron emissions effectively and economically.

The process gas flow will be drawn from the customer's process through the Air-Clear Fiber-bed Coalescing System process by an induced draft fan. Clean gases are discharged to atmosphere through the customer's stack.

THIS MANUAL

Read and thoroughly understand this O&M Manual before attempting to install or operate the AIR-CLEAR Fiber-bed Coalescing System.

This manual contains important information regarding the installation, set-up and operation of the system. Failure to read and thoroughly understand the information in this manual may result in improper and dangerous installation and operation of the equipment.

If there are any questions regarding this manual or the installation or operation of the system, please contact AIR-CLEAR for clarification before proceeding.

PROCESS DESIGN PARAMETERS

Max Design Inlet Flow:	2,500 ACFM @ 120°F
Air-Clear Filter Pressure Drop:	1-3"WC clean Change out filters ~ 12"WC
Guaranteed Stack Opacity:	≤ 5%
Automatic Fire Detection Switch:	225°F inlet

Utilities

Customer to provide 30A electrical service at 480V, 3Ph, 60 Hz.

Operational Modifications

If operating conditions differ from the design parameters specified, please consult AIR-CLEAR before operating the system.

SCHEDULED MAINTENANCE ACTIVITIES

Daily: Record all velocity pressure gage, and filter pressure drop values on Log Sheet Check temperature chart recorder, visual check of system, hand check of carbon canister temperature.

Weekly: Check water/mist buildup liquid in filter sump. Change and file chart recorder chart as needed. Note sump for petrol/water pickup service.

Monthly: Note schedule of petrol/water pickup, check temp recorder calibration date. Bi-monthly - collect air grab sample from carbon exhaust for Method 18.

Quarterly: Check pre-filters for replacement, change more often if needed. Check for Temperature Chart Recorder calibration due date. Check main filters for condition.

Annual: Semi-annual replacement of carbon polishing adsorber activated carbon. Semi annual replacement of main filters. Change temperature chart recorder every six months for current calibration.

PROCESS FLOW

The Air-Clear Fiber-bed Coalescing System is a superior method for removing liquid aerosol droplets from industrial exhaust gas. These emissions, which often appear as smoke or blue haze, are made up of liquid and solid particulate predominately in the submicron size range. Fiber-bed filters, unlike many other control technologies, are specifically designed for liquid mists, and reduce stack opacity to 5% or less, which is generally not visible to the naked eye.

1.) As the process inlet gas enters the coalescing filter section, it is forced through beds of densely packed Fiber-bed filters where coalescing of the submicron aerosol is achieved.

2.) The cleaned air exits through the clean air plenum on top of the unit.

3.) The induced draft exhaust fan is located at the end of the system. Having the ID fan located at the end of the filter system helps keep the fan clean, thus reducing its maintenance requirements .

4.) The clean filtered exhaust air exits the fan and into the carbon filter (provided by others) for removal of odor causing compounds stack to the atmosphere, reducing opacity levels to less than 5%.

5.) To compensate for the gradual increase in pressure drop across the system, a variable frequency drive (VFD) and fan outlet damper are provided and to be used to maintain a constant volumetric flow from the customer's process. These settings will need adjustment from time to time depending upon usage, filter fouling and other factors.

COMPONENT DESCRIPTION

Filter Vessel

The vessel is constructed of 3/16" A-36 carbon steel, all seams continuously welded. Flanges and couplings as required for proper operation are included, as shown on the attached drawing. All access doors are hinged. Adequate space should be provided in front of the system to allow easy access to the filters for inspection or replacement.

A corrosion resistant coating is applied to all internal surfaces of this vessel. See MSDS sheet attached.

Pre-Filter

A fiber-bed (Figure 1) is provided to extend the life of the main filters. The fiber-bed will collect larger droplets and require more frequent replacement. It is accessed through the horizontal door on the vessel inlet. No overhead lifting equipment is required to service/replace the pre-filter.

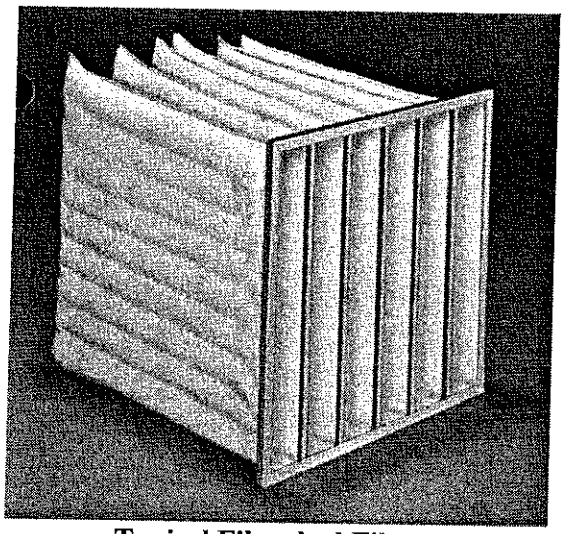

Typical Fiber-bed Filters
Figure 1

Main Filters

The Fiber-bed diffusion filters are constructed of high efficiency fiberglass media, with the supporting assembly constructed of carbon steel (Figure 1). The filters attach to the tubesheet using studs and nuts. They are accessed through a side door on the vessel. No overhead lifting equipment is required to service the filters. The filter testing program ensures that Air-Clear systems perform as designed. Test conditions are much harsher than field conditions, making the test more discriminating.

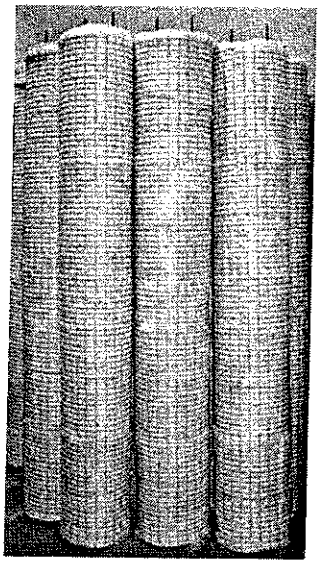

Typical Fiber-bed Filters
Figure 1

Control/Instrumentation Package

The system is supplied with self-contained starter panel. Differential pressure guages are mounted on the unit to observe pre-filter, main filter pressure drop. A Velocity pressure gage is provided (to be mounted in the customer's stack) for visual indication of flow through the system. The fan outlet damper and/or the VFD can be adjusted manually to maintain a desired flow through the system. A normal range should fall between 1" and 4" WC.

Exhaust Fan

A 20.0 HP exhaust fan rated at 2600cfm with 3 phase 460V motor is provided with Variable Frequency Drive.

Fire Suppression

A fire suppression system is provided. A water sprinkler piping header is provided above the filter vessel tubesheet. Sprinkler heads and firewater supply are to be provided by the customer. The inlet fire detector is wired in a circuit to shut down the ID fan in the event of a fire. This relay should also be wired to the customer's fire control circuit, if available, to shut off the process flow in the event of a fire.

SEQUENCE OF OPERATION

This section will describe the general operation and setup of the Air-Clear system. Please refer to electrical and assembly drawings in Section 10 of this manual.

System Setup

Before Installation:

- Review all drawings and read the O&M Manual to familiarize your self with the system components. Verify all dimensions. Failure to do so or failure to report any discrepancies constitutes acceptance and concurrence with all site conditions.
- Off load unit and inspect all parts for shipping damage. Inventory all parts and compare them to the packing list. Report any losses immediately. The unit is provide with the pre-filter an main filters installed. Spare pre-filters are shipped loose.
- All standard safety practices for rigging and handling heavy equipment, as well as, adhering to all OSHA safety practices are required for safe and correct installation. Only qualified and certified heavy equipment operators are to operate machinery.

Installation Procedure:

1. Rig and set the main vessel of the unit in place. This is provided as one-piece section. Tie-down clips are provided for anchoring the unit to the pad.
2. Rig and set the fan skid per drawing.
3. Connect unit outlet spool with fan inlet spool using the clamped belt provided.
4. Fill the main dip tube (from above the tube sheet) and the two filter J tubes (from the main filter door) with oil prior to closing the vessel. Any motor oil will suffice.
5. Connect fire protection water supply to the coupling at the top of the unit. Install a sprinkler head (by customer).
6. Run and terminate 480V to the control panel disconnect.
7. Connect the 480 V power to the fan motor.
8. Wire the inlet fire detector to the control panel as shown on the electrical drawing attached.
9. Apply the supplied touch-up paint to all external areas as-necessary.
10. Mount pitot tube and velocity gauge in customer's stack. Install tubing from pitot to guage.

Pre-Start Inspection

Before starting the system, the operator must perform a pre-start inspection to ensure the following:

- ❑ Adequate electric is available.
- ❑ The drain valve is fully closed.
- ❑ Fire water is available.
- ❑ The access doors are closed, sealed and bolted.

Recommended Sequence for System Start-Up

The start-up sequence is as follows:

- ❑ Start Air-Clear system before any other upstream process.
- ❑ Turn Main Breaker ON.
- ❑ Turn VFD ON.(if VFD was provided)
- ❑ Check and record filter pressure.
- ❑ Adjust manual damper and/or VFD speed to maintain desired flow. Check the velocity gauge as a reference.

Shutdown

The start-up sequence is as follows:

- ❑ Shutdown Air-Clear System after any other upstream process.
- ❑ Turn VFD OFF
- ❑ Turn Main Breaker OFF.
- ❑ Drain system as needed.

SAFETY PROCEDURES

☠ DANGER ☠

HIGH VOLTAGE ELECTRICAL EQUIPMENT IS INCLUDED IN THIS SYSTEM. TURN OFF ALL POWER AND LOCK OUT THE DISCONNECT BEFORE ATTEMPTING ANY SERVICE OR TROUBLESHOOTING. SEVERE INJURY OR DEATH WILL OCCUR IF HAZARD IS IGNORED.

The control system for this unit must be designed to provide a safe operation. Any alteration or adjustment by anyone other than a qualified technician can damage the equipment and severely injure anyone in the area.

The equipment arrangement is shown on Drawing E attached. The electrical wiring diagram is shown on Drawing E, attached.

Do not attempt to operate under any other conditions then those specified in this document.

This system is designed for an unattended automatic operation after start up adjustments. Do not assume it is safe to perform maintenance or troubleshooting because the system is not operating. Lock, tag and try the disconnect before attempting maintenance on any part of the system.

Do not assume there is not electrical shock hazard when the disconnect is open. There will still be high voltage on the incoming side of the panel disconnect.

FIRE DETECTION AND SUPPRESSION

The system is equipped with a fire detection system for the inlet duct spool.

Please follow the manufacturers recommended testing procedures found in Section 9 of this manual.

The sprinkler system (sprinkler head and supply piping by customer) located in the main filter unit must be operational at all times. Please follow all NFPA and local codes when installing the fire water sprinkler nozzle.

It is the responsibility of the customer to maintain the fire suppression system.

MAINTENANCE

Fiber-bed Filter

The main filters must be replaced when their pressure drop approaches 12"WC. To change the main filters:

1.) Shut down the system fan and lock out the power.

2.) Open the main access door, unscrew the filter drains (J tubes) from the couplings in the bottom of the filters and remove them from the vessel.

3.) The Fiber-bed filters hang from the tubesheet. Each filter is fastened using two (2) studs attached to the end of the filter, which protrude through the tubesheet opening into the clean air plenum. A U-bracket straddles the tubesheet opening, with the studs going through the two holes in the u-bracket. Nuts fasten the filter studs to the bracket and retain them in the system.

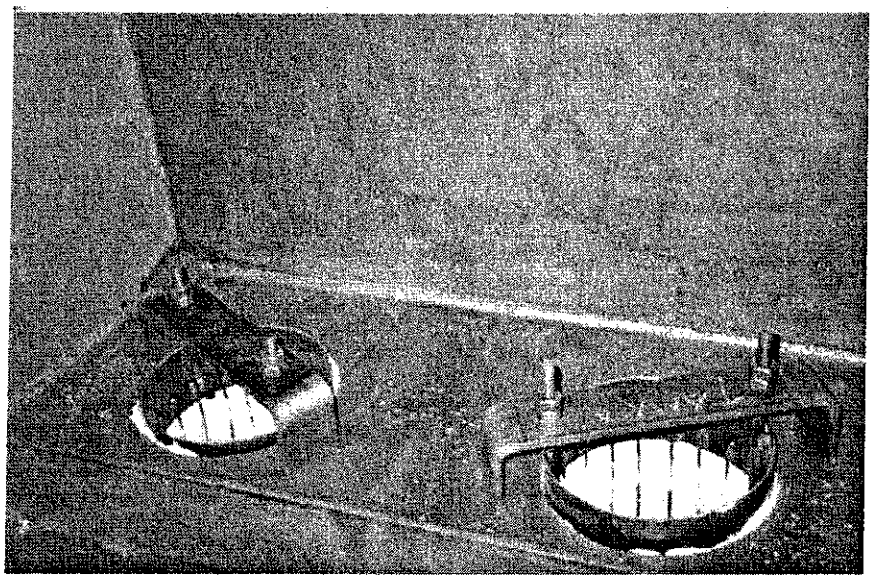

Properly Installed Filter (View above tubesheet)
Figure 3

4.) Open the tubesheet access hatch and unbolt the filter studs protruding through the tubesheet. Position an employee outside the access door to guide the filter when it is unbolted. The filter will drop down to floor.

5.) Rotate the top of the filters out and remove them from the vessel.

6.) Pressure wash the inside of the unit. Blow out the tube sheet drains to ensure they are clear.

7.) Install the replacement filters. Insert the top of the filter through the tubesheet opening so that the studs and top of the filter collar protrude through the opening. While holding the filter from below, place the u-bracket over the two studs from above, so the legs of the bracket straddle the opening. Tighten the nuts securely to ensure a good seal between the top of the filter and the bottom of the tubesheet. Make sure that the filter collar extends above the tubesheet (see Figure 3). A credit card should be difficult to insert between the filter and tubesheet.

8.) Reattach the filter drains.

9.) Fill all filter and tubesheet drains with oil.

10.) Close and bolt the access door.

11.) Restart the system.

Fire Detection Circuit

The fire detection circuit must be checked monthly. The detection circuit is checked by opening the connection box at the fire detector and shorting the wires together. This must shutdown the fan. If not, the unit must be repaired to ensure safe operation of the fire suppression system.

It is the **customer's** responsibility to connect the fire sprinkler piping to the sprinkler water supply system in their plant. The customer must install sprinkler nozzles in accordance with the local code requirements and the requirements of their insurance carrier. Failure to connect the fire sprinkler water system to the Air-Clear system will negate all warranties.

SYSTEM MALFUNCTIONS & CORRECTIVE ACTIONS

Temperature of Air Clear Unit

The unit may operate at a temperatue of 120 F at the inlet with flow of 2,500 ACFM . It is desirable to operate the unit at a cool as possible temperature. Cooler temperatures help reduce volatilization of petroleum based materials and hydrocarbon compounds in the airstream. Reduced temperatures allow the fiber bed coalescing system to operate more efficiently and will help reduce and control the visible oil mist associated with visible emissions. Monitor the temperature chart daily for normal and abnormal ranges of temperatures. Chart temperatures will increase and follow ambient temperatures to the hottest hours of the day, generally afternoon to around 3 pm. Compare daily high temperatures to previous days with like ambient temperatures. **Corrective Actions:** If temperatures are abnormal and beyond 120-140 F, look for tank(s) operations and heat , the number of tanks operating, and see if any temperatures are high. To maintain collection and an opacity of < 5% the temperature should be kept in the range of 120-140 F. Consider bleeding cool outside air from an inlet point or valve at the pipeline trunk. Contact Blacklidge management and consider reducing unnecessary heat on any tanks. Monitor temperatures into the carbon vessel and out of the carbon vessel. If temperatures can not be controlled below 140 F contact Air-Clear, contact environmental engineer, and notify EPC.

Gages and Auto-Controller of Air Clear Unit

The digital indicating automated controller and differential pressure transmitter are connected to the inlet side of the Air-Clear system to maintain a *steady* draw on the incoming pipelines for collection of tank volatiles. The controlling system is connected to a Variable Frequency Drive (VFD) motor for constant adjustment of fan speed to maintain a sufficient draw at the inlet throughout the day and night, and depending on tank(s) operating conditions. Generally, the automated controller runs at -3 " WC with sufficient draw to maintain control on the tank top vents. **Corrective Actions:** If the controller indicates values at -1 or smaller contact Blacklidge manager for evaluations and adjustments. Check for any open points in inlet pipelines, as a large leak will produce a pressure loss. Check for control window openings at the tops of tanks. Increase the power at the controller to maintain at least -2 to -3" WC . Levels stronger than -3" will likely induce wasted draw with over-collection of liquid waste and unnecessary use of fan power. If the controller display indicates values out-of range, or an error code, notify Blacklidge managers, attempt to correct errors or out of range parameters. If corrections of error or out-of-range can not be corrected in-house and as soon as possible; then notify EPC of error and contact manufacturer, or control specialist (such as Classic Controls in Lakeland), or an electrician with industrial control specialty. Inform EPC of actions and inform EPC when system is corrected and functioning.

Temperature of Carbon Unit

The carbon unit can operate with inlet temperatures received from the Air Clear unit running at normal temperatures. At first installation the unit should be monitored frequently for the first eight hours to note any unusual temperature rise. Activated carbon will usually increase in temperature when first put on-line, however it should stabilize and not rise to temperatures hot to the touch by hand at the vessel exterior. A rise in the gas temperature of greater than 50 F is an indication of excessive heat generation. Under these conditions, the unit should be removed from service and the cause of the excessive heat generation should be determined. The carbon unit can, and should be disconnected and can be cooled by water. If the carbon unit needs to be disconnected for heat, contact EPC and report conditions. Operating temperatures should be normal at all times (should be OK to the hand touch temps, and can be checked quickly during the day). Maintenance personnel should be aware and note any temperature changes while the unit is operating.

Upon startup of the adsorber maintain a continuous air flow through the adsorber for the first 24 hours and monitor the effluent gas temperature. Monitor the outlet temperature every four (4) hours for the first 24 hours of operation (See Table and Log sheet in Attachement). **Corrective Actions:** If an abnormal increase in temperature occurs, (inlet plus 50 degrees- or around 170 F) disconnect carbon from system influent and cool the unit with running water. If the carbon unit needs to be disconnected for heat, contact EPC and report conditions. Isolate unit from nearby flammable equipment and determine if fire control action or help is needed. Operating temperatures should be normal at all times (should be OK to the hand touch temps, and can be checked quickly during the day). Maintenance personal should be aware and note any temperature changes while the unit is operating. Personnel should notify Blacklidge management of any hot conditions. Any temperatures above 'hot' to the hand touch should be investigated. Determine temperatures at the inlet and exhaust and evaluate if actions are needed.

Increased Pressure Drop

Pressure drop across the Fiber-bed filters can be a good indicator of filter condition. Increases in pressure drop are due to either an increase in the liquid loading, or collection of non-draining materials on the filter media. If an increased liquid loading is the cause, the pressure drop will (gradually) return to normal when the process exhaust returns to normal (lower liquid loading) conditions. If non-draining materials are the cause, filter replacement is usually required.

As solid materials build up on and in the filter, pressure drop increases. Filter replacement is required when the pressure drop exceeds acceptable levels. This is usually determined by the limitation of the fan moving the process air through the system. A log of system operating parameters, process conditions, etc. is invaluable in accurately planning maintenance requirements.

If a high-pressure drop is accompanied by an increase in opacity, check that the filter drain is clear. If it becomes plugged, liquid can build up in the filter assemblies, leading to high-pressure drop, re-entrainment and opacity.

Decreased Pressure Drop

Decreases in pressure drop are typically caused by a blown filter drain seal, physical damage to the filters, or corrosion of some part of the filter assembly by components of the process exhaust. This is generally accompanied by an increase in system emissions. If corrosion or physical damage is the problem, filter replacement is usually required.

CARBON SYSTEM DESCRIPTION

The activated carbon adsorber selected for the Blacklidge Emulsions Air Clear fiber bed coalescing system consist of a seven foot tall four foot diameter steel canister containing 1600 pounds of activated carbon. It is attached to the exit exhaust of the coalescing unit to ensure final reduction of odor causing hydrocarbon or organic vapors. It is used to reduce or eliminate asphalt and/or sulfur based odors to non detect levels. Odor detection from the carbon adsorber should be monitored regularly. When odor breakthrough is detected, it indicates that the carbon is spent and requires changeout, followed by refilling of the adsorber with new or reprocessed carbon.

CARBON ADSORBER DESIGN PARAMETERS

The activated carbon adsorber selected for the Blacklidge Emulsions Air Clear fiber bed coalescing system was selected as suggested by the Air-Clear equipment vendor. Airflow is selected in the range of 1500 to 4000 cfm with very low pressure drop. Inlet and outlet diameters should be in the range of 12 inches. Vapor phase activated carbon is selected at 1600 lbs. Large/minimum amounts of carbon in a vessel allow for time-weight adsorbtion capacity. Greater amounts of carbon allow more time between contaminant loading of carbon, allowing time between change out. Currently the amount of carbon (1600lbs) is sufficient for at least 6 months use until a change is needed. Odor detection from the carbon adsorber can be a sufficient method to determine when breakthrough has occurred, with the need to replace. Odor should be monitored regularly. Currently the carbon control system operates under vacuum.

CARBON OPERATION MAINTENANCE and MONITORING

The activated carbon adsorber selected for use at Blacklidge Emulsions requires little operation maintenance as there are no moving parts. Upon first use and installation the unit should be monitored frequently for the first eight hours to note any unusual temperature rise. Activated carbon will usually increase in temperature when first put on-line, however it should stabilize and not rise to temperatures hot to the touch by hand at the vessel exterior. Operating temperatures should be normal at all times and maintenance personal should be aware and note any temperature changes while the unit is operating.

Maintenance personal should also note any other unusual conditions such as odors or visible emissions coming from the carbon exhaust. Unusual conditions such as elevated temperature, odors, or visible emissions should be reported to management at once, and logged and reported to the file as soon as possible. For system performance and monitoring the facility will use an air sample grab bag to collect for volatile aromatics (e.g. benzene, xylene) and petroleum hydrocarbons. Samples are collected every two months and the analyses is EPA Method 18.

Using a combination of the review of sample analysis and odor monitoring and operating experience over several years it is determined that the carbon adsorber unit should be changed out every 6 months. A six month schedule is practical, economical and within a safe range of collection efficiency prior to odor breakthrough. Records are to be kept with this O, M, & M plan for carbon adsorber system replacement dates, such as purchase request or invoice copies of change out. Laboratory certificate of analysis are to be kept with this Operation , Monitoring, & Maintenance Plan.

CARBON INSTALLATION

When the carbon adsorber is initially connected upon startup and vapors first contact the activated carbon, the bed temperature may increase due to water vapor and/or contaminant chemical heat of adsorption. Certain chemical compounds in the presence of activated carbon may oxidize, decompose or polymerize. This could result in temperature increases sufficient to cause ignition of the activated carbon or adsorbed material. Upon startup of the adsorber maintain a continuous air flow through the adsorber for the first 24 hours and monitor the effluent gas temperature. **Monitor and record the outlet temperature every (4) hours for the first 24 hours of operation (See Log Sheet table in Attachment).** A rise in the gas temperature of greater than 50 F is an indication of excessive heat generation. Under these conditions, the unit should be removed from service and the cause of the excessive heat generation should be determined. If an abnormal increase in temperature occurs, disconnect carbon from system in fluent and cool unit with running water. Contact EPC and report conditions if the temperature can not be controlled and stabilized, or if the unit needs to be disconnected for cooling. Isolate unit from nearby flammable equipment and determine if fire control action or help is needed. If a compounds reaction with activated carbon is unknown, appropriate tests should be considered. **See Installation Instructions for the carbtrol**

CARBON SAFETY

Certain chemical compounds in the presence of activated carbon may oxidize, decompose or polymerize. This could result in temperature increases sufficient to cause ignition of the activated carbon or adsorbed material. If an increase in temperature occurs, disconnect carbon from system in fluent and cool unit with running water. Isolate unit from nearby flammable equipment and determine if fire control action or help is needed. If a compounds reaction with activated carbon is unknown, appropriate tests should be considered.

THIS MANUAL IN ALL

This manual is to be read in entirety by all maintenance personal involved in the operation of the Air Clear vapor mist collection, coalescing system and/or carbon adsorber polishing. Read and thoroughly understand this Manual before attempting to install, operate, or repair any system. Also find the AIR-Clear Operations and Maintenance Manual for Blacklidge and review and understand it completely.

This manual contains important information regarding the installation, set-up and operation of the system. Failure to read and thoroughly understand the information in this manual may result in improper and dangerous installation and operation of the equipment.

If there are any questions regarding this manual or the installation of operation of the system, please contact the carbon vendor, or facility supervisor for clarification before proceeding.

Attachments : Carbtrol Start-up, Installation, and Operating Instruction, Specifications-4 pgs.
Vapor Phase Granular Carbon Info-1 page

READ THESE INSTRUCTIONS THOROUGHLY BEFORE STARTUP. IMPROPER STARTUP COULD RESULT IN AN UNSAFE CONDITION.

INSTALLATION AND OPERATING INSTRUCTIONS
G-7 VAPOR PHASE CARBTROL® ADSORBER

ADSORBER PREPARATION

When vapors contact activated carbon, the bed temperature may increase due to water vapor and contaminant chemical heat of adsorption.

Where organic contaminant concentrations above 500 ppm_v are expected, contact Carbtrol Corp. for evaluation of the potential for heat buildup.

When the Carbtrol adsorber is initially installed, maintain a continuous air flow through the adsorber for the first 24 hours of operation, and monitor the effluent gas temperature. A rise in the gas temperature of greater than 50°F is an indication of excessive heat generation. Under these conditions, the unit should be removed from service and the cause of the excessive heat generation should be determined.

Where the reaction of the contaminated gas stream with activated carbon is unknown, it is advisable to thoroughly wet the carbon with water prior to startup. The following procedure is recommended for wetting the carbon bed:

> Remove the shipping plugs from the inlet and outlet ports. Insert a hose into the outlet port and fill the adsorber with water. The filled adsorber must be allowed to stand for at least one hour.
>
> Remove the water before the adsorber is put into service using the 3/4" bottom drain coupling. Replace the 3/4" drain plug before putting the adsorber into operation.

INSTALLATION

To put the Carbtrol G-7 Adsorber into service, place the adsorber on a well drained, level grade or concrete pad in an accessible area, preferably close to the exhaust vent to be treated. Connect a full size pipe or hose from the process exhaust to the inlet port. Where required, a full sized vent line can be connected to the adsorber outlet port to direct treated gases from the immediate area.

Before operating the G-7 Adsorber, a minimum size 8 AWG copper grounding cable should be connected between the cable clamp provided on the support foot of the adsorber, and the building electrical grounding system. If a grounding system is not available, this grounding cable should be connected to a suitably driven ground rod. (See N.E.C. Section 250.83).

Carbtrol adsorbers are not to be used for explosive gas applications. Where upset conditions may cause exceedence of the LEL (lower explosive limit), flame arresters and/or nitrogen blanketing of the process should be considered.

OPERATION

As the contaminated process exhaust gas passes through the adsorber, the granular activated carbon adsorbs the impurities while the purified process gas is discharged from the adsorber. After continued use, the carbon will become saturated with impurities and will require replacement.

Gas discharging from the G-7 Adsorber should be tested regularly to determine when the carbon bed is nearing saturation. Properly scheduled testing of the discharge gas will indicate when breakthrough has occurred and the adsorber should be changed.

The capacity of the activated carbon varies with the type and concentration of impurities in the gases handled. Therefore, the determination of effective adsorber life for a specific use will come with the practical experience of using it under a specific set of operating conditions.

The G-7 Adsorber is designed for permanent installation. Once the carbon is spent, it should be removed by vacuuming, and shipped off site for reactivation or disposal. A vacuum system can be provided for this purpose. Consult Carbtrol.

It is recommended that replacement carbon be kept on site, so that when breakthrough of the carbon occurs, it can be quickly replaced.

Operating pressure for CARBTROL G-7 Adsorbers should not exceed 9 psig.

WARNING:

A. **Activated carbon can react adversely with some contaminants, which can cause excessive heat buildup. If the effect of the contaminant you wish to treat on activated carbon is unknown, then it must first be tested.**

B. **The initial heat of adsorption that occurs when vapors first contact activated carbon causes a rise of temperature in the carbon bed. As recommended above, maintained air flow or wetting of the carbon bed will minimize the initial heat buildup.**

C. **Carbtrol adsorbers should not be used with flammable vapors or flammable gas mixtures.**

D. **Activated carbon depletes oxygen in enclosed spaces. Follow NIOSH guidelines for safety in enclosed spaces.**

WARRANTY

This product is designed to remove toxic pollutants from air. However, there is no assurance of its capacity. SELLER WARRANTS THAT THE GOODS ARE AS DESCRIBED. BUT NO OTHER WARRANTY IS GIVEN, WHETHER EXPRESS OR IMPLIED, INCLUDING, BUT NOT LIMITED TO, THE IMPLIED WARRANTIES OF MERCHANTABILITY AND FITNESS FOR A PARTICULAR PURPOSE. Seller will not be liable for loss or damage to property or any incidental or consequential loss or expense from property damage due directly or indirectly from the use of the product.

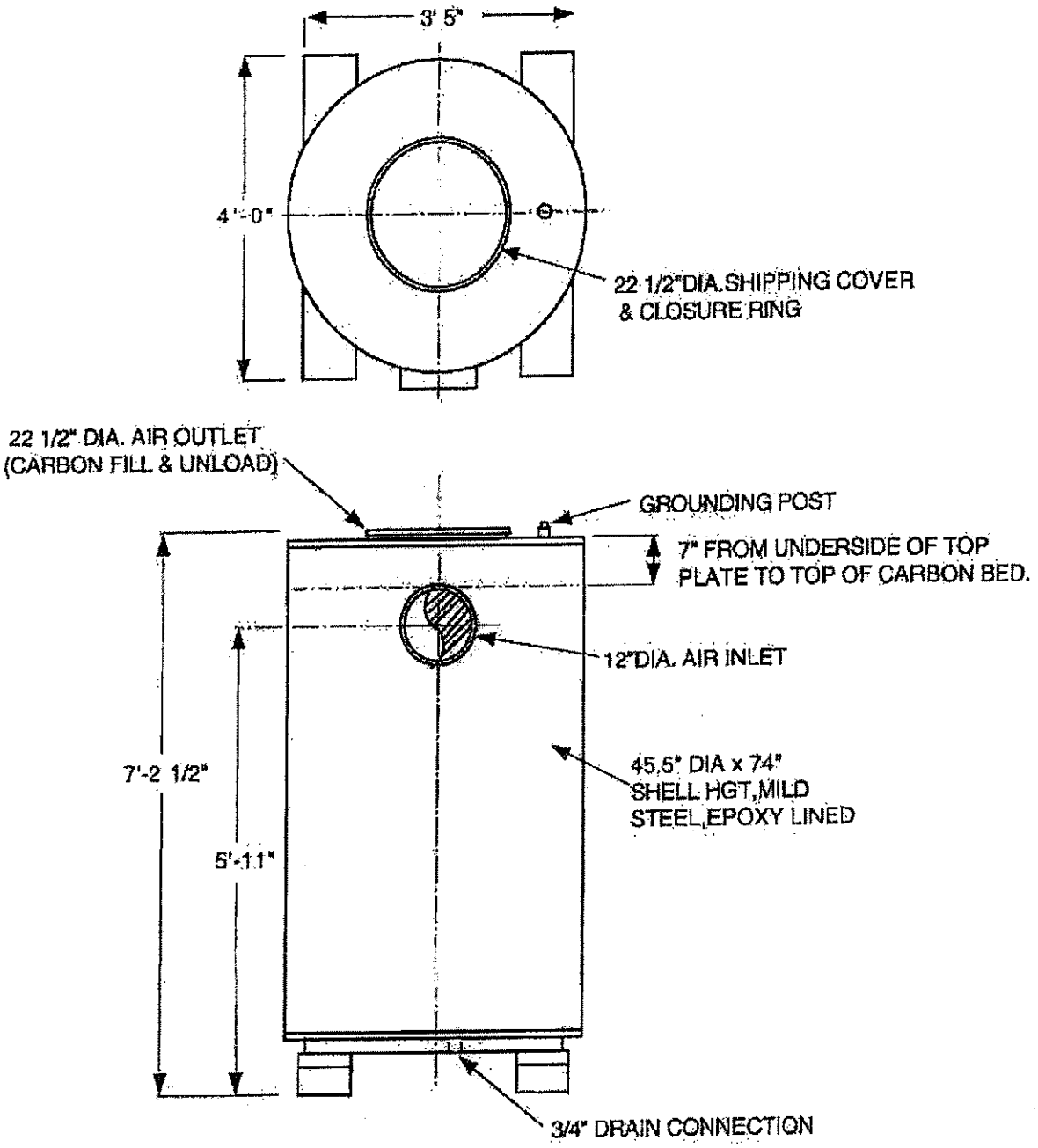

DRY CARBON SHIPPING WGT=2200#

CARBTROL ® CORPORATION	51 RIVERSIDE AVENUE WESTPORT CONN. 06880 (203) 226-5642	
SCALE 1/2"=1'0"		BY WH
DATE 1-8-92	Wah	REV 4-23-98
CARBTROL G-7 ADSORBER 1600# CARBON		
ARRANGEMENT	S	DWG 1596/9

CARBTROL®

AIR PURIFICATION ADSORBERS
1,600 LB. ACTIVATED CARBON G-7
2,600 LB. ACTIVATED CARBON ~~G-8~~

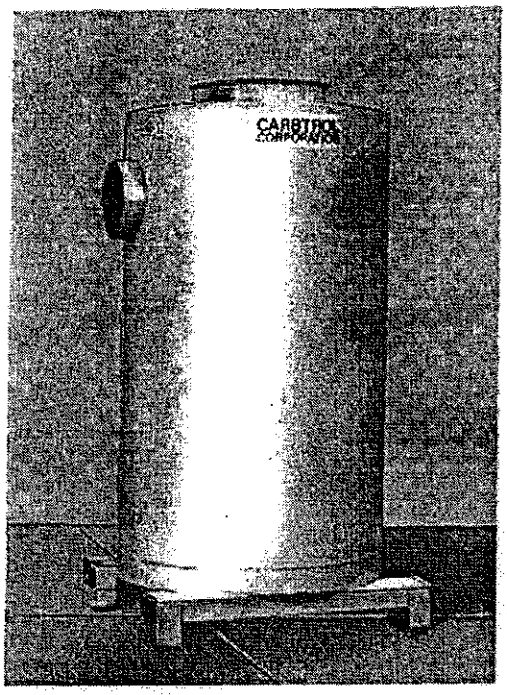

FEATURES

- High air flow capacity.
- Low pressure drop.
- Epoxy lined carbon steel construction with PVC internal piping.
- Radial flow distribution system.
- Bi-directional flow path.
- Fork lift fittings for easy handling.
- High activity carbon.
- Acceptable for transport of hazardous spent carbon.

OPTIONS

- PVC lining or stainless steel construction.
- Interconnecting piping.
- "Take-Back" and Reactivation Services.

SPECIFICATIONS

	G-7	G-8
MAX. FLOW CFM:	4,000	5,000
CARBON (lbs.):	1,600	2,600
DIMENSIONS:	46" Ø x 87" H	60" Ø x 87" H
SHIPPING WT (lbs.):	2,200 Dry	3,300 Dry
INLET:	12" Pipe	16" Duct
OUTLET:	22 1/2" Drum Type Opening	
DESIGN PRESSURE:	3 psi	3 psi

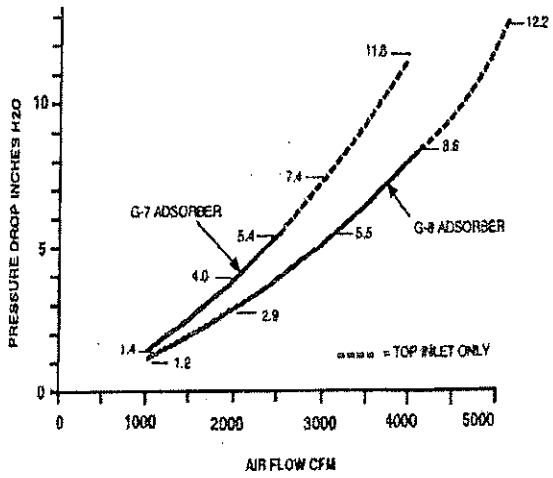

© Copyright 1991 Carbtrol Corporation -7/27/99

AT-415/92

CARBTROL®
CORPORATION

51 Riverside Avenue
Westport, CT 06880

1-800-242-1150 • Fax # (203) 226-5322
Web Address: http://www.carbtrol.com

Reactivated Granular Carbon (Vapor Phase)

Carbonair's reactivated granular carbon is manufactured from spent bituminous coal and coconut based carbon which has been thermally reactivated to regain its adsorptive capacity. This adsorbent media offers an economical option for treating low level organic hydrocarbons.

Typical Applications

Soil vapor extraction, air stripper off-gas, VOC control, and tank venting.

Typical Contaminants

Petroleum hydrocarbons such as MTBE, BTEX (benzene, toluene, ethylbenzene, xylenes), butylbenzene, isopropylbenzene, isopropylether, propylbenzene, styrene, trimethylbenzene, tetraethyl lead (TEL), low molecular weight PAHs (polyaromatic hydrocarbons such as naphthalene, methylnaphthalene) and high molecular weight PAHs (fluoranthene, phenanthrene, and pyrene).

Chlorinated and brominated hydrocarbons such as bromoform, bromodichloromethane, carbontetrachloride, chlorodibromomethane, chloroform, dibromochloropropane, dichloroethene (DCE), dichloroethane (DCA), ethylenedibromide, trichloroethane (TCA), trichloroethene (TCE), tetrachloroethane, and tetrachloroethene (PCE), and polychlorinated biphenyls (PCBs).

Typical Physical Properties*

Carbon Tetrachloride Number	55% (minimum)
Apparent density (dense packing)	30-31 lbs/ft^3
Hardness Number	95 (minimum)
Moisture Content (as packed)	2% (maximum)

CARBON SYSTEM START-UP LOG SHEET

Date	Time	Operator	Inlet Temperature	Outlet Temperature	Comments		Comments

Monitor and record the outlet temperature every four hours for the first 24 hours of startup.

Air-Clear System Log Sheet

Date	Time	Operator	Inlet Temperature	Filter Pressure Drop	Velocity Pressure (Stack)	filter Pressure Drop	Comments