TECHNICAL EVALUATION
&
PRELIMINARY DETERMINATION

APPLICANT

Duke Energy Florida, Inc. (DEF)
299 First Avenue North
St. Petersburg, Florida 33701

PROJECT

Citrus Combined Cycle Project
Project No. 0170004-047-AC

COUNTY

Citrus County, Florida

PERMITTING AUTHORITY

Florida Department of Environmental Protection
Division of Air Resource Management
Office of Permitting and Compliance
2600 Blair Stone Road, MS#5505
Tallahassee, Florida 32399-2400

November 13, 2014

1. APPLICATION INFORMATION

1.1 Applicant Name and Address

Duke Energy Florida, Inc. (DEF)
299 First Avenue North
St. Petersburg, Florida 33701

Authorized Representative:
R. Alexander Glenn, Florida State President, Duke Energy

1.2 Processing Schedule

- August 1, 2014: Received Air Construction Permit Application
- November 13, 2014: Preliminary Determination Issued

1.3 Facility Description and Location

Refer to **Figure 1** and **Figure 2**. The proposed DEF Citrus Combined Cycle Project (CCCP) will be built on 400 acres adjacent to near the Crystal River Energy Complex (CREC) that is located at 15760 West Power Line Street, Crystal River in Citrus County, Florida. The approximate UTM coordinates of the proposed CCCP are Zone 17, 334.87 kilometers (km) East; 3205.69 km North.

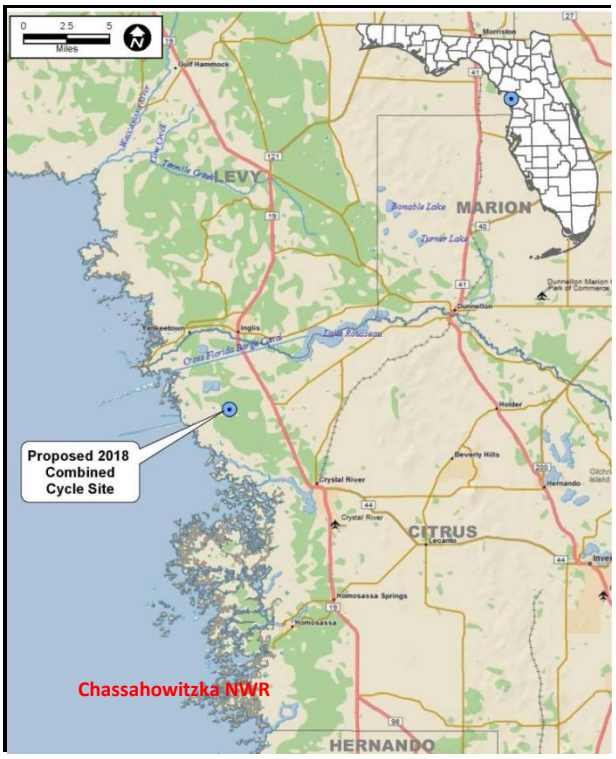

Figure 1. Project Location, Citrus County.

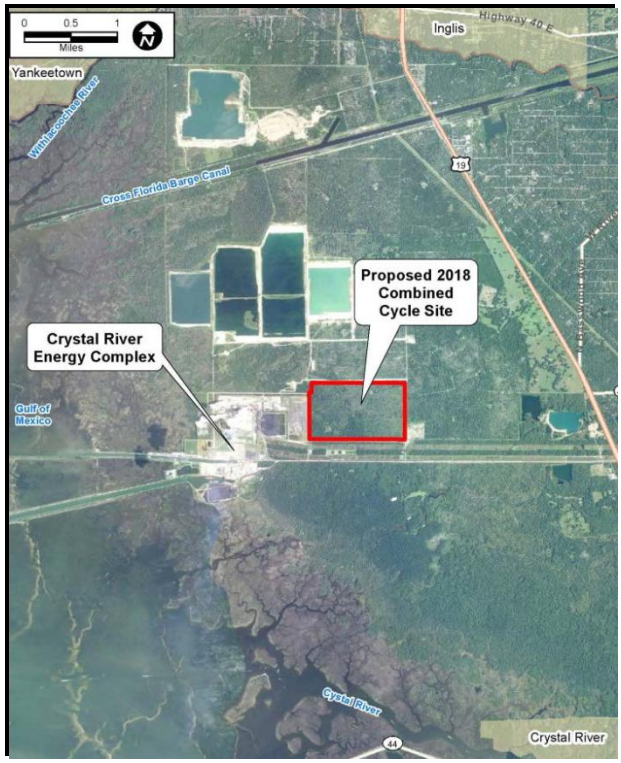

Figure 2. CREC and Future CCCP Site.

The CCCP site is approximately 22 km north of the Chassahowitzka National Wildlife Refuge (NWR); a Prevention of Significant Deterioration (PSD) Class I area. www.fws.gov/chassahowitzka Citrus County is within an area that is currently designated in attainment with each State and National Ambient Air Quality Standard (State AAQS or NAAQS) or not classified.

CREC consists of four coal-fired fossil fuel steam generating units with electrostatic precipitators (ESPs); two natural draft cooling towers for Units 4 and 5; helper mechanical cooling towers for Units 1 and 2; coal, fly ash, and bottom ash handling facilities; limestone and gypsum material handling activities; hydrated lime storage and transfer system for Units 4 and 5; and various fire pumps and generators.

Table 1 is a listing of the emissions units that comprise the CREC.

Table 1. Listing of Emissions Units (EUs) Comprising the Existing CREC.

E.U. No.	Brief Description
Regulated Emission Units	
001	Fossil Fuel Steam Generator, Unit 1 (to be retired as part of CCCP)
002	Fossil Fuel Steam Generator, Unit 2 (to be retired as part of CCCP)
003	Fossil Fuel Steam Generator, Unit 5
004	Fossil Fuel Steam Generator, Unit 4
006	Fly ash transfer (Source 1) from FFSG Unit 1
008	Fly ash storage silo (Source 3) for FFSG Units 1 and 2
009	Fly ash transfer (Source 4) from FFSG Unit 2
010	Fly ash transfer (Source 5) from FFSG Unit 2
013	Cooling towers for FFSG Units 1, 2, and 3
014	Bottom ash storage silo for FFSG Units 1 and 2
015	Cooling towers for FFSG Units 4 and 5
016	Material handling activities for coal-fired steam units
023	Limestone and Gypsum Material Handling Activities
029	Diesel fire pump, south yard
032	Hydrated Lime Storage and Transfer System for Units 4 and 5
033	Portable Concrete Batch Plant
034	Diesel Emergency Fire Pump
035	Emergency Diesel Generator for Security Building and System (Backup)
036	260 kW Emergency Diesel Generator at Unit 3 Technical Support Center
037	Unit 3 Diesel Generator Air Compressor
038	Fire Pump House Emergency Diesel Generator Unit for North Plant
039	175 kW Emergency Diesel Generator for Site Administration Building
Other Emissions Units and/or Activities	
017	Fuel and lube oil tanks and vents
018	Sewage treatment, water treatment, lime storage
019	Two 3500 kW diesel generators associated with Unit 3
030	Emergency generator (meteorological weather station)

Unit 1 is a pulverized coal, dry bottom, tangentially-fired boiler. It is rated at 440.5 megawatts (MW). The unit is equipped with an ESP for particulate control. Emissions are exhausted through a 499 foot stack with a 15 foot exit diameter. Unit 2 is a pulverized coal, dry bottom, tangentially-fired boiler. It is rated at 523.8 MW. The unit has an ESP. Emissions are exhausted through a 502 foot stack with a 16 foot exit diameter.

Units 4 and 5 are identical pulverized coal, dry bottom, wall-fired boilers rated at 760 MW. Air pollution control equipment includes: low-NO_X burners; selective catalytic reduction (SCR) systems; flue gas desulfurization (FGD) systems; acid mist mitigation systems; and ESPs. Units 4 and 5 share a common 550 foot stack.

2. PROPOSED PROJECT

DEF proposes to construct a nominal 1,640 MW natural gas-fueled combined cycle project and ancillary equipment. The project includes the permanent shutdown of CREC Units 1 and 2. The CCCP will consist of two power blocks designated as CCCP Units 1 and 2.

2.1 Description of CCCP Project

Each power block will consist of: two natural gas-fueled nominal 270 MW Mitsubishi Power Systems (MPS) 501GAC combustion turbine-electric generators (CTGs) with optional inlet chillers; two heat recovery steam generators (HRSGs) equipped with natural gas-fueled duct burners and selective catalytic reduction (SCR) reactors; two 180-foot exhaust stacks; and a nominal 280 MW steam turbine electric generator (STG).

Ancillary equipment includes: an auxiliary boiler; two natural gas-fired fuel gas dew point heaters; two ultra-low sulfur diesel (ULSD) fueled emergency generators; one ULSD fueled emergency firewater pump engine; two mechanical draft cooling towers; and two CTG inlet chiller cooling towers. **Table 2** is a listing of the key EUs that will comprise the CCCP.

Table 2. Listing of EUs Comprising the CCCP.

EU No.	Emission Unit Description
040	CCCP Unit 1A – One nominal 270 MW CTG with duct-fired-HRSG
041	CCCP Unit 1B – One nominal 270 MW CTG with duct-fired HRSG
042	CCCP Unit 2A – One nominal 270 MW CTG with duct-fired HRSG
043	CCCP Unit 2B – One nominal 270 MW CTG with duct-fired HRSG
044	Natural Gas Fueled Auxiliary Boiler rated at approximately 216 MMBtu/hour heat input
045	Two Natural Gas-fueled Gas Dew Point heaters rated at approximately 11.2 MMBtu/hour
046	One ULSD-fueled Emergency Generator rated at approximately 1,500 kW
047	One ULSD-fueled Emergency Generator rated at approximately 1,500 kW
048	One ULSD-fueled Emergency Firewater Pump Engine rated at approximately 575 hp
049	Two (14 or 16-cell) Mechanical Draft Cooling Towers
050	Two (6-cell) CTG Inlet Chiller Cooling Towers (optional)
None	Raw and Demineralized Water Storage Tanks, Aqueous Ammonia Storage, Handling

The natural gas to be used in the CTGs, duct burners, auxiliary boiler and gas dew point heaters will have a maximum sulfur content of 2.0 grains per 100 standard cubic feet (gr/100 SCF). The ULSD used in the emergency engines will have a maximum sulfur content of 0.0015 percent (%).

Nitrogen oxides (NO_X) emissions will be reduced with lean premix combustion technology (also called dry low-NO_X or DLN). The SCR systems will further reduce NO_X emissions through injection of ammonia into a catalyst contained within a reactor located in the HRSGs.

Emissions of carbon monoxide (CO), particulate matter (PM), PM with a mean diameter of 10 microns or less (PM_{10}) and PM with a mean diameter of 2.5 microns or less ($PM_{2.5}$), sulfuric acid mist (SAM), sulfur dioxide (SO_2) and volatile organic compounds (VOC) from the CTGs will be minimized by the efficient, high-temperature combustion of inherently clean fuels. Emissions of Greenhouse Gases (GHGs) as carbon dioxide equivalent (CO_2e) will be minimized by use of low carbon fuel and combined cycle technology.

Emissions from ancillary equipment will be controlled by use of inherently clean fuels and the requirements of the applicable New Source Performance Standards (NSPS) at Title 40 Code of Federal Regulations Part 60 (40 CFR 60) and the National Emission Standards for Hazardous Air Pollutants (NESHAP) at 40 CFR 63.

Each CTG/HRSG stack will be equipped with a continuous emission monitoring system (CEMS) to continuously monitor NO_X emissions in accordance with the acid rain provisions. Flue gas oxygen (O_2) content or carbon dioxide (CO_2) content will be monitored as a diluent gas.

Figure 3 is an artist rendition of the CCCP in a westerly direction. It includes CREC Units 4 and 5 in the background (further west) that will be retained including stacks and seawater cooling towers.

Figure 3. Artist Rendition of Future CCCP. CREC Units 4 And 5 Shown in Background (West).

2.2 Combined Cycle Process Description

A CTG is an internal combustion engine that operates with rotary rather than reciprocating motion and that is coupled to an electrical generator. **Figure 4** is an external/internal view of a MPS 501G CTG from a Mitsubishi licensee brochure. Doosan Products Brochure

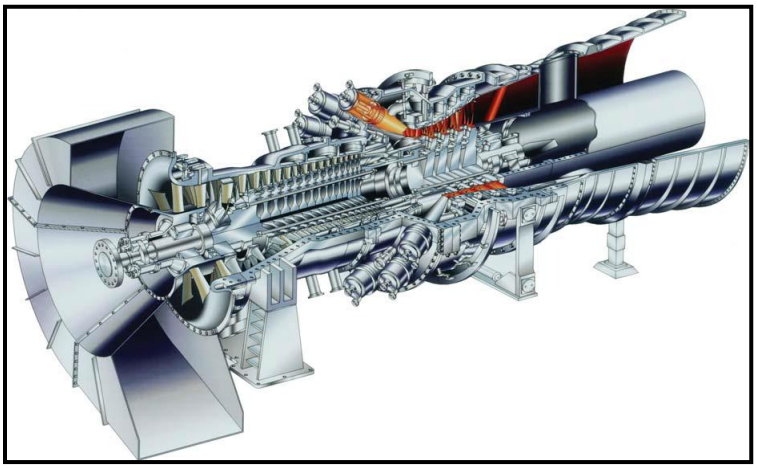

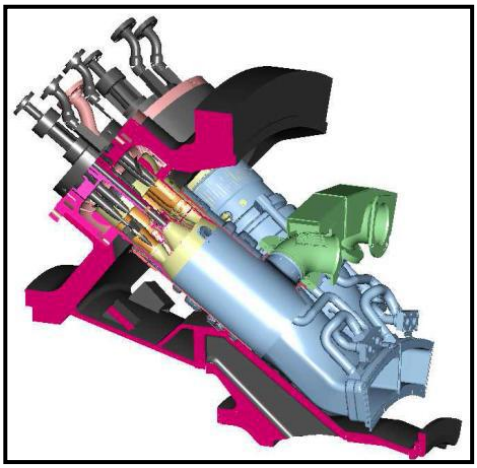

Figure 4. External/Internal Diagram of a MPS 501G CTG. **Figure 5. Steam Cooled Combustor.**

Ambient air is drawn into the 14-stage compressor of the CTG where it is compressed to a very high pressure ratio, which is on the order of 21:1 or more. The compressed air is then directed to the combustor section, which consists of 16 individual, can-annular, DLN combustors. Fuel is introduced, ignited, and burned. The hot combustion gases are routed through the steam-cooled transition pieces (**Figure 5**) then are diluted with additional cool air from the compressor and directed to the four-stage turbine (expansion) section. The newer MPS 501GAC relies fully on air cooling with no steam cooling.

Energy is recovered in the turbine section in the form of shaft horsepower, of which typically more than 50 percent is required to drive the internal compressor section. The balance of recovered shaft energy is available to drive the external load unit such as an electrical generator. Turbine exhaust gas (TEG) is discharged at a temperature of approximately 1,100 degrees Fahrenheit (ºF) and contains more than 10% O_2. The TEG is available for additional energy recovery and can also support further combustion.

Each power block will operate as a two-on-one (i.e. two CTG/HRSG sets and one STG) combined cycle as depicted in **Figure 6**. The TEG from each CTG will produce additional steam in each HRSG. The energy contained in the TEG will at times be further augmented by burning gas within the HRSGs duct burners. The steam from the two HRSGs (per block) will, in-turn, drive a single separate STG (per block), thus producing additional electrical power.

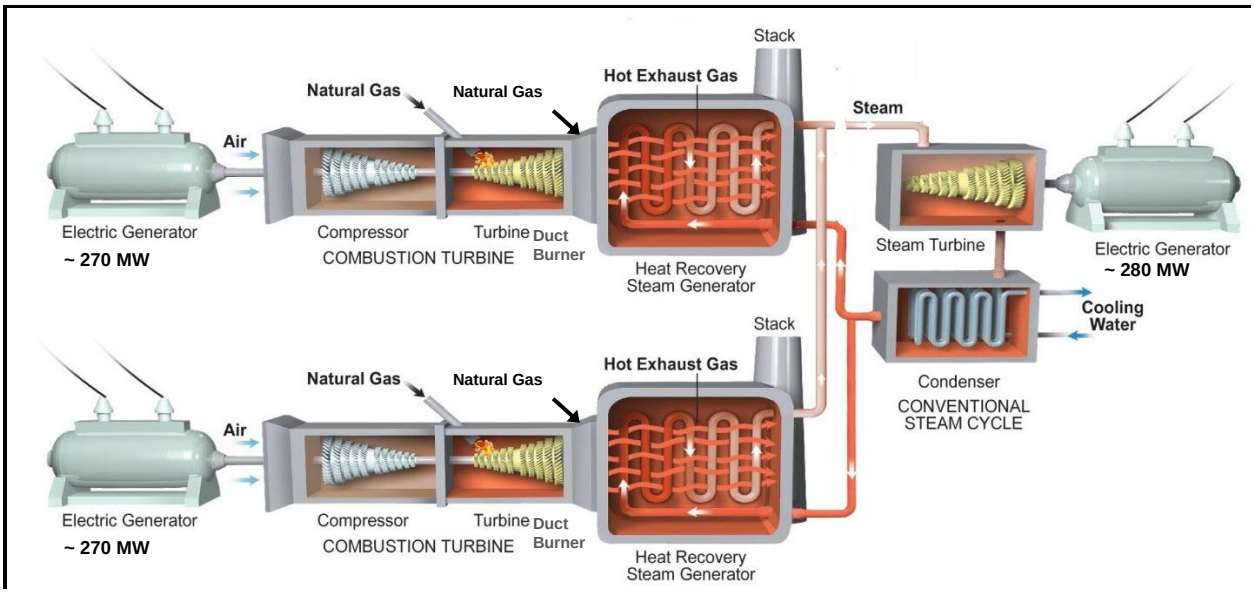

Figure 6. A "Two-On-One" Natural Gas-Fueled Combined Cycle Block with Duct-Fired HRSGs.

The MPS 501GAC CTG is expected to achieve nearly 59% thermal efficiency in combined cycle operation on the basis of the lower heating value (LHV) of natural gas (about 56% based on higher heating value, HHV).

Duct firing is useful during periods of high-energy demand much like a small but efficient peaking unit. When used, the gas-fired duct burners in the HRSG provide additional heat to the turbine exhaust gas. This increases steam production and steam-generated electricity.

CTG compressor inlet air cooling can be cooled by chilling or by injection/evaporation of fine water droplets. Lower compressor inlet temperatures result in a greater air mass flow rate through the CTG with a boost in electrical power production. The emissions performance remains within the normal profile of the CTG for the lower compressor inlet temperatures. This is typically implemented at ambient temperatures of 60° F or higher.

3. AIR POLLUTION REGULATIONS

3.1 Department Regulations

Projects at stationary sources with the potential to emit air pollution are subject to the applicable environmental laws specified in Section 403 of the Florida Statutes (F.S.). The statutes authorize the Department of Environmental Protection (Department) to establish regulations regarding air quality as part of the Florida Administrative Code (F.A.C.). The applicable chapters are listed in **Table 3**.

Table 3. Applicable Rules from the F.A.C.

Chapter	Description
62-4	Permits
62-17	Electrical Power Plant Siting
62-204	Air Pollution Control – General Provisions
62-210	Stationary Sources of Air Pollution – General Requirements
62-212	Stationary Sources – Preconstruction Review
62-213	Operation Permits for Major Sources (Title V) of Air Pollution
62-214	Requirements for Sources Subject to the Federal (Title IV) Acid Rain Program
62-296	Stationary Sources – Emission Standards
62-297	Stationary Sources – Emissions Monitoring

3.2 Federal Regulations

The U.S. Environmental Protection Agency (EPA) establishes air quality regulations in Title 40, Code of Federal Regulations (40 CFR), Subchapter C (parts 50 through 98). Link to Subchapter C 40 CFR part 60 (40 CFR 60) identifies New Source Performance Standards (NSPS) for a variety of industrial activities. Link to 40 CFR 60 40 CFR 61 specifies National Emission Standards for Hazardous Air Pollutants (NESHAP). 40 CFR 63 specifies NESHAP provisions based on the Maximum Achievable Control Technology (MACT) for given source categories. Link to 40 CFR 63

Key federal regulations adopted by reference are given in Rule 62-204.800, F.A.C. State regulations approved by EPA are given in 40 CFR 52, Subpart K – Florida; also known as the State Implementation Plan (SIP) for Florida. Link to Florida SIP

3.3 Summary of Key Regulations Applicable to the Citrus Combined Cycle Project

- The CREC is a major source of hazardous air pollutants (HAP) before and after the CCCP project.
- The CREC includes units subject to the acid rain provisions of the Clean Air Act (CAA). The CCCP includes units subject to the acid rain provisions of the CAA.
- The CREC is a Title V major source of air pollution in accordance with Chapter 62-213, F.A.C. because the potential emissions of at least one regulated pollutant exceed 100 tons/year. Key regulated pollutants include CO, NO_X, PM, PM_{10}, $PM_{2.5}$, SO_2, VOC and SAM.
- The CREC is a major stationary source in accordance with Department Rule 62-212.400, F.A.C. - PSD.
- The CCCP (as discussed below) does not trigger a PSD review and a requirement to conduct Best Available Control Technology (BACT) determinations pursuant to Department Rule 62-212.400, F.A.C.

- The proposed project includes units subject to the NSPS of 40 CFR 60.
- The proposed project includes units subject to the NESHAP of 40 CFR 63.
- The project is subject to certification under the Florida Power Plant Siting Act, 403.501-518, F.S. and Chapter 62-17, F.A.C.

4. PSD APPLICABILITY REVIEW

4.1 General PSD Applicability

The Department regulates major stationary sources in accordance with Florida's PSD program pursuant to Rule 62-212.400, F.A.C. PSD preconstruction review is required in areas that are currently in attainment with the state and federal ambient air quality standards (AAQS) or areas designated as "unclassifiable" for these regulated pollutants. The project is located in Citrus County, which is in an area that is currently designated in attainment with each State AAQS and NAAQS or not classified.

The key requirement of a PSD review include: employment of Best Available Control Technology (BACT); a demonstration that the project will not cause or contribute to a violation of a state of federal AAQS or increment; and a demonstration that the project will not cause adverse impacts to Air Quality Related Values (AQRVs) such as visibility, soils and vegetation.

Commonly addressed PSD pollutants include: CO, NO_X, PM, PM_{10}, $PM_{2.5}$, SO_2, VOC, SAM, lead (Pb), fluorides (F), and mercury (Hg). Additional PSD pollutants that are more common to certain other industries include: hydrogen sulfide (H_2S), TRS including H_2S, reduced sulfur compounds (RSC) including H_2S, municipal waste combustor (MWC) organics measured as total tetra- through octa-chlorinated dibenzo-p-dioxins and dibenzofurans (dioxin/furan), MWC metals measured as PM; MWC acid gases measured as SO_2 and HCl, and municipal solid waste (MSW) landfill emissions as non-methane organic compounds (NMOC).

Greenhouse gases (GHGs) is defined at section 40 CFR 86.1818-12(a) as the aggregate group of gases including CO_2, nitrous oxide (N_2O), methane (CH_4), hydrofluorocarbons (HFCs), perfluorocarbons (PFCs), and sulfur hexafluoride (SF_6). GHGs is expressed as CO_2-equivalent (CO_2e).

4.2 Definition of a Major Stationary Source

As defined in Rule 62-210.200(Definitions), F.A.C., a stationary source is a "major stationary source" (major PSD source) if it emits or has the potential to emit (PTE):

- 250 tons per year (tons/year) or more of any PSD pollutant; or
- 100 tons/year or more of any PSD pollutant and the facility belongs to one of the 28 listed PSD major facility categories.

The listed PSD major facility categories includes "fossil fuel-fired steam electric plants of more than 250 million British thermal units per hour heat input". The given category applies to the DEF CREC. The CREC is a major stationary source based on actual emissions of and potential to emit 100 tons/year or more of several individual PSD pollutants.

Once a new facility is considered a major stationary source based on one PSD pollutant, then other PSD pollutants are reviewed for PSD applicability based on the respective Significant Emission Rate (SER) defined and specified in Rule 62-210.200, F.A.C. Each pollutant projected to be emitted at a rate equal to or greater than its respective SER is also considered to be "*significant*" and subject to PSD preconstruction review, including a BACT determination.

Refer to **Table 4**. Although a new stationary source may be "major" for a single PSD pollutant, the project must include BACT controls for any PSD pollutant that exceeds the corresponding SERs listed in the table below.

Table 4. List of Significant Emission Rates (SERs) by PSD-Pollutant. [1]

Pollutant	SER (tons/year)	Pollutant	SER (tons/year)
CO	100	NO_X	40
$PM/PM_{10}/PM_{2.5}$	25/15/10	Ozone (VOC) [2]	40
$PM_{2.5}$ (NO_X)	40	$PM_{2.5}$ (SO_2)	40
Ozone (NO_X) [2]	40	SAM	7
SO_2	40	Pb	0.6
Hg	0.1	GHGs	> 75,000 (CO_2e) and > 0 (mass) [3]

1. Excluding fluoride and pollutants specific to the Pulp and Paper industry, MWCs, MSW landfills.
2. Ozone (O_3) is regulated by its precursors (VOC and NO_X). PSD for $PM_{2.5}$ can be triggered by its precursors (NO_X and SO_2).
3. Pursuant to 40 CFR 52.21(b)(23)(ii), pollutants with no SER listed at 40 CFR 52.21(b)(23)(i) have a SER of zero (0) tons/year.
4. SER also means any emissions rate or any net emissions increase associated with a major stationary source or major modification which would construct within 10 km of a Class I area and have an impact on such area equal to or greater than 1 $\mu g/m^3$, 24-hour average.

For Greenhouse gases (GHGs), the project must first be shown to emit or have a PTE of 75,000 tons/year of GHGs as carbon dioxide equivalent (CO_2e) to be subject to regulation and then an SER of zero (0 on mass rate basis) applies.[1]

Definition of Major Modification

"Major modifications" at major stationary sources are also subject to PSD review. According to Rule 62-210.200(Definitions), F.A.C., Major Modification (of a Major Stationary Source) is defined as follows:

(a) Any physical change in or change in the method of operation of a major stationary source that would result in a significant emissions increase of a PSD pollutant ***and*** a significant net emissions increase of that pollutant from the major stationary source. (Refer to SERs in **Table 4** above)

(b) Any significant emissions increase from any emissions units or net emissions increase at a major stationary source that is significant for volatile organic compounds or nitrogen oxides shall be considered significant for ozone. (Refer to SERs in **Table 4** above)

(c) through (d). These paragraphs are not relevant to this review.

For a major modification of an existing major stationary source, the review must include a BACT determination for any PSD pollutant that exceeds the respective SER. The review must include demonstrations that the project will not cause or contribute to a violation of an AAQS or increment and that the project will not adversely affect AQRVs.

GHGs becomes subject to regulation at a major modification if project emissions as CO_2e are greater than 75,000 tons/year and mass GHGs exceed zero tons/year.

4.3 PSD Applicability for the Project

The CCCP will emit the following PSD pollutants: SO_2, NO_X, CO, PM, PM_{10}, $PM_{2.5}$, SAM, VOC and small amounts of lead (Pb) and mercury (Hg). When combined with the shutdown of Units 1 and 2, the CCCP will result in **net** emission changes (mostly decreases) of the same pollutants that are less than the SER.

[1] In making the CO_2e calculation, the values listed in 40 CFR 98, Subpart A, Table A-1 are used to weight emissions by their respective Global Warming Potential (GWP). For example, the current GWP factors for four of the GHGs are: CO_2 = 1; CH_4 = 25; N_2O = 298 and SF_6 = 22,800.

Table 5 provides PSD applicability calculations based on the net emission increases and decreases expected to result from the CCCP project. Consistent with a recent Supreme Court Opinion and EPA Implementation Guidance, if project does not trigger PSD for pollutants other than GHGs, then PSD is not triggered by GHGs regardless of emissions. [2]

Table 5. Net Emissions Changes in Tons/Year and PSD Applicability for the DEF CCCP.

Pollutant	Baseline Emissions Units 1-2	CCCP Potential Emissions	Net Emissions Increases or (Decreases)	Applicable PSD SER	Trigger PSD? Yes/No
SO_2	29,168	271	(28,897)	40	No
NO_X	6,459	2,712	(3,747)	40	No
CO	3,774	626	(3,148)	100	No
PM	840	279	(562)	25	No
PM_{10}	2,092	326	(1,766)	15	No
$PM_{2.5}$	1,765	326	(1,439)	10	No
SAM	89	40	(49)	7	No
VOC	54	68	14	40	No
Lead (Pb)	0.10	0.05	(0.38)	0.6	No
Mercury (Hg)	~140 lb/year	<10 lb/year	(~130 lb/year)	0.1	No
GHGs	3,872,621	5,639,174	1,766,553	SER must be exceeded for another pollutant and > 75,000 (as CO_2e) and > 0 (as total mass)	No

5. EMISSIONS STANDARDS FOR THE CCCP

5.1 CTG Emission Standards

5.1.1 CTG NO_X Emissions Standards

NO_X Formation

NO_X is formed during combustion as a result of the dissociation of molecular nitrogen (N_2) and oxygen (O_2) to their atomic forms and subsequent recombination into seven different oxides of nitrogen, especially nitrogen oxide (NO) and nitrogen dioxide (NO_2).

Thermal NO_X forms in the high temperature area of the combustor. Thermal NO_X increases exponentially with flame temperature and linearly with residence time. Flame temperature is dependent upon the ratio of fuel burned in a flame to the amount of fuel that consumes all of the available oxygen, also known as the equivalence ratio. By maintaining a low fuel ratio (lean combustion), the flame temperature will be lower, thus reducing the potential for NO_X formation. The relation of NO_X production with respect to flame and equivalence ratios (lean versus rich operation) is shown in **Figure 7**. GE Report GER 3568G

In most combustor designs, the high temperature combustion gases are cooled to an acceptable temperature with dilution air prior to entering the turbine (expansion) section. The sooner this cooling occurs, the lower the thermal NO_X formation. The relationship between flame temperature, firing temperature, work output and NO_X formation is depicted in **Figure 8**, which is from a General Electric discussion on these principles.

[2] U.S. Supreme Court opinion dated June 23, 2014. Link to Supreme Court Opinion EPA guidance dated July 24, 2014. Link to EPA Guidance

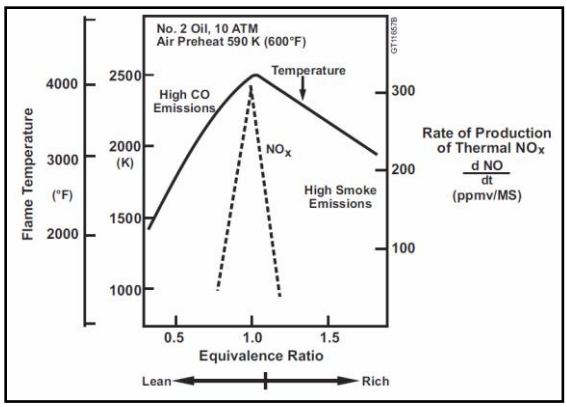

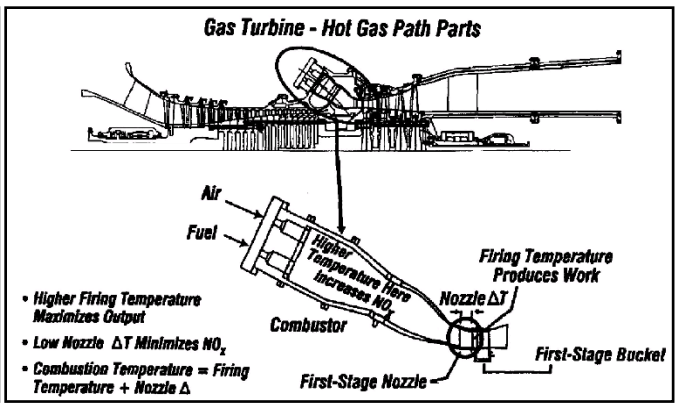

Figure 7. NO_X vs. Temperature, Equivalence Ratio. Figure 8. Hot Gas Path Parts, NO_X Control.

Prompt NO_X is formed in the proximity of the flame front as intermediate combustion products. The contribution of prompt to overall NO_X is relatively small in near-stoichiometric combustors and increases for leaner fuel mixtures. This provides a practical limit for NO_X control by lean combustion.

Fuel NO_X is formed when fuels containing bound nitrogen are burned. This phenomenon is not of great concern when combusting natural gas.

Uncontrolled emissions from combustion turbines range from about 100 to 600 parts per million by volume, dry, corrected to 15 percent oxygen (ppmvd @15% O_2). The Department estimates uncontrolled emissions at approximately 200 ppmvd for large frame combustion turbines.

NO_X Controls

Wet Injection. Fuel and air are mixed within traditional combustors and the combustion actually occurs on the boundaries of the flame. This is termed "diffusion flame" combustion. Injection of either water or steam directly into the combustor lowers the flame temperature and thereby reduces thermal NO_X formation. There is a physical limit to the amount of water or steam that may be injected before flame instability or cold spots in the combustion zone would cause adverse operating conditions for the CTG.

Advanced dual-fuel combustor designs can tolerate large amounts of steam or water without causing flame instability. Such designs can achieve NO_X emissions in the range of 30 to 42 ppmvd @15% O_2 when employing wet injection for backup fuel oil firing, which is not planned for this project.

Dry and Ultralow Low NO_X (DLN and ULN) Combustion. The excess air in lean combustion cools the flame and reduces the rate of thermal NO_X formation. Premixing of gaseous fuel and air prior to combustion can further reduce NO_X emissions. This is accomplished by minimizing localized high temperatures pockets within the combustion zones. These principles are incorporated into the MPS 501G DLN combustor shown in **Figure 5** above and the MPS 501GAC "ultralow NO_X" (ULN) combustor proposed for the CCCP.

In the case of the MPS 501G DLN combustor, the difference between combustion temperature and firing temperature into the first stage is minimized by steam cooling of the transition piece and first stage nozzle. Thus a lower combustion temperature (and lower NO_X) can be achieved by steam cooling compared with air cooling for a given firing temperature (equal work). Alternatively, a higher firing temperature (more work, greater efficiency) can be achieved by steam cooling compared with air cooling for a given combustion temperature (equal NO_X).

The steam-cooled MPS 501G combustor emits NO_X at concentrations less than 15 ppmvd @15% O_2 at loads between 60 and 100 percent of capacity. The firing temperature within the 60-100% load range is between roughly 2,500 and 2,750 °F. The low NO_X values are an excellent achievement considering the high firing temperature.

Steam for combustor cooling is supplied from the HRSG and is not available until a certain load is reached. Hence, steam cooling causes significantly longer starting and ramping. Link to CTG Report Since the development of the steam-cooled MPS 501G DLN combustor in the late 1990s, there has been much research into an air-cooled version also capable of achieving low NO_X concentrations.

According to recent reporting, the air-cooled MPS 501GAC CTG can now achieve similar NO_X and equal or better output and cycle efficiency compared with the steam-cooled MPS 501G CTG. Refer to **Table 6** for the manufacturer's performance product information Link to MPS G Series Products

Table 6. Updated MPS 501G and 701G Series CTG Performance.

Model	Gas Turbine Only		Combined Cycle [1]	
	Power Output	Heat Rate-LHV	Power Output	Heat Rate-LHV [2]
M501G	267 MW	8,730 Btu/kWh	398 MW	5,843 Btu/kWh
M501GAC	272 MW	8,600 Btu/kWh	404 MW	5,763 Btu/kWh
M701G	334 MW	8,630 Btu/kWh	498 MW	5,755 Btu/kWh

1. For one-on-one configuration, multi-shaft (i.e. STG and STG not on same shaft)
2. Combined cycle LHV efficiency for MPS 501GAC = [(3,413)/(5,763)]x100% = 59.2%

Selective Catalytic Reduction (SCR). SCR is an add-on NO_X control technology that is employed in the exhaust stream following the CTG. SCR reduces NO_X emissions by injecting ammonia (NH_3) into the flue gas in the presence of a catalyst. NH_3 reacts with NO_X in the presence of a catalyst and excess oxygen (O_2) yielding molecular nitrogen (N_2) and water (H_2O) per the following simplified reaction:

$$4NO + 4NH_3 + O_2 \rightarrow 4N_2 + 6H_2O$$

The catalysts are available for applications at temperatures between roughly 300 and 1,100°F and typically are comprised of titanium oxide (as TiO_2), vanadium (as V_2O_5) and tungsten (as WO_3). The formulations contain progressively less vanadium and become more costly for the higher temperature applications. There are numerous examples of SCR installations at continuous duty combined cycle units throughout Florida. In combined cycle units, the catalyst can be placed at an optimal temperature (roughly 400 to 600°F) for the purposes of high efficiency and lowest cost within the HRSG. In such applications, NO_X emissions on the order of 2.0 ppmvd @15% O_2 are achieved.

Figure 9 (Nooter-Eriksen) below is a diagram of a HRSG. Components 10 and 21 represent the SCR reactor and the NH_3 injection grid. The SCR system lies between low and high-pressure steam systems where the temperature requirements for conventional SCR can be met.

Figure 10 is a photograph of the MPS 501G-based FPL West County Energy Center (WCEC) Unit 1. The external lines to the NH_3 injection grid are easily visible. The magnitude of the installation can be appreciated from the relative size compared with nearby individuals and vehicles.

The SCR catalyst is typically augmented or replaced over a period of several years although vendors typically guarantee catalysts for about three years. Excessive NH_3 use can increase emissions of CO, NH_3 (slip) and $PM_{10}/PM_{2.5}$ when sulfur-bearing fuels are used.

Applicant's NO_X Emissions Standard Proposal

CTG emission standards are contained in NSPS Subpart KKKK-Stationary Gas Turbines. Link to NSPS KKKK . **Table 7** is a summary of the requirements applicable to the CTGs at the CCCP excerpted from NSPS Subpart KKKK, Table 1. The emission standard applicable to combined cycle CTGs when firing natural gas (as planned for the CCCP) is 15 ppmvd @15% O_2. A NO_X standard of 96 ppmvd @15% O_2 applies for turbines operating at less than 75% of peak load. Table in NSPS KKKK.

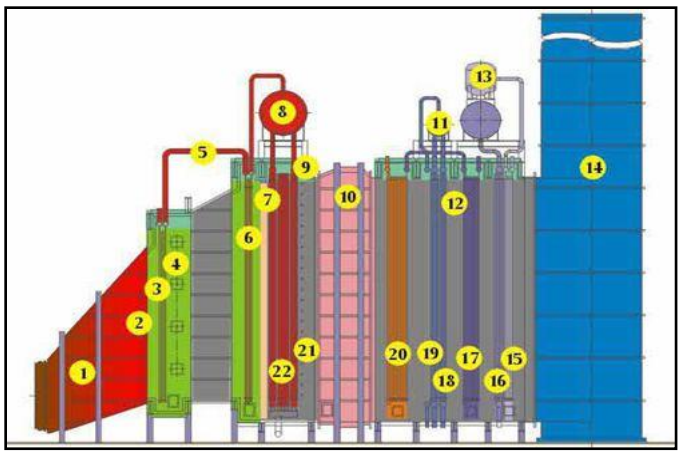

Figure 9. Key HRSG Components (10 is SCR).

Figure 10. FPL West County Energy Center.

Table 7. NSPS Subpart KKKK - Standards for New Large Stationary Combustion Turbines.

Combustion Turbine Type	Peak Load Heat Input, Power Output [1]	NO_X Standard [2]
New, modified, or reconstructed turbine firing natural gas	> 850 MMBtu/hour	15 ppm @15% O_2 or 54 ng/J, useful output (0.43 lb/MW-hour)
Turbines operating at less than 75 percent of peak load [3]	> 30 MW output	96 ppm @15% O_2 or 590 ng/J, useful output (4.7 lb/MW-hour)

1. Heat input based on the HHV or MW of useful output
2. ng/J means nanograms per joule
3. The full section reads: Turbines located north of the Arctic Circle (latitude 66.5 degrees north), turbines operating at less than 75 percent of peak load, modified and reconstructed offshore turbines, and turbine operating at temperatures less than 0 °F.

DEF proposes to comply with the NSPS Subpart KKKK NO_X limits for the CCCP by a combination of DLN technology, wet injection and SCR. The SCR system shall be used only to the extent it is necessary to ensure compliance with the applicable NO_X standards. Compliance will be determined on a 30-unit operating day rolling basis by NO_X-CEMS rather than on a 4-hour basis with an annual performance test. The applicant's proposed emission standards are acceptable and sufficient to insure that PSD review for NO_X is not triggered.

5.1.2 CTG CO and VOC Emissions

<u>CO and VOC Formation and Combustor Characteristics</u>

CO and VOC are emitted from CTGs due to incomplete fuel combustion. Most CTGs incorporate good combustion practices to minimize emissions of CO and VOC. The primary control techniques are based upon high temperature, sufficient time, turbulence, and excess air. Additional control can be obtained by installation of an oxidation catalyst.

CO and VOC emissions in the turbine exhaust gas should be very low based on the high combustion temperature and the relatively high temperature and excess air in the turbine exhaust gas. There are no emission standards for CO and VOC in NSPS Subpart KKKK and the project does not trigger PSD review or a BACT determination for CO or VOC.

DEF's CO and VOC Emissions Estimates

DEF proposed emission controls for CO and VOC based on good combustion practices. The estimated emissions are contained in **Table 8** for CO, VOC as well as NO_X for several the MPS 501GAC CTG.

Table 8. DEF Emission Estimates for CO, VOC and NO_X from MPS 501GAC CTGs at CCCP.

Load (%)	CO		VOC		NO_X	
	ppmvd @15% O_2	lb/hour[1]	ppmvd @15% O_2	lb/hour[1]	ppmvd @15% O_2	lb/hour[1]
50	10.0	35.0	0.9	1.8	15.0	86.2
75	10.0	45.1	0.9	2.3	15.0	111.3
100 [2]	4.0	23.2	0.8	2.7	15.0	142.9
100 [3]	7.0	46.6	1.2	4.6	15.0	163.9

1. Estimated mass emissions in pounds per hour (lb/hour) at 68.6 °F. Emissions are greater at lower temperatures and lower at higher temperature.
2. Without duct burners in operation.
3. With duct burners in operation

Actual NO_X emissions will be close to the estimates given above (not much lower) because the SCR system will be operated only to the extent needed to comply with the limit of 15 ppmvd @15% O_2. Emissions of CO and VOC will generally be much less than estimated based on the very high firing temperature for the MPS 501GAC CTG. The emissions will be approximately the same as measured for the FPL West County Energy Center that was based on MPS 501G technology. **Table 9** is a summary of compliance testing conducted on FPL WCEC Unit 1, 2 and 3 in 2011.

Table 9. Full Load Compliance Test Results From MPS 501G CTGs at the FPL WCEC UNIT 3.

Unit	CO		VOC [3]	
	ppmvd @15% O_2	lb/hour	ppmvd @15% O_2	lb/hour
3A [1]	0.6	3.5	0.4	1.3
3A [2]	0.5	3.2	1.2	4.6
3B [1]	0.4	2.5	0.4	1.3
3B [2]	0.8	5.4	0.8	3.0
3C [1]	0.5	2.7	0.04	0.1
3C [2]	0.7	4.4	0.2	0.7

1. Base load without duct burners in operation.
2. Base load with duct burners in operation.
3. VOC measurement included methane that is not actually a VOC. After correction, the results would be much less than reported.

The Department reviewed the 2013 Annual Operating Report for the FPL WCEC. FPL reported 1,580 tons of CO emitted from the **nine** MPS 501G CTGs at the 3,750 MW WCEC. The emissions were based on the CO-CEMS and include startup and shutdown data. DEF CO estimates future emissions of 1,582 tons/year, including startups and shutdowns, from the **four** MPS 501GAC CTGs at the 1,640 MW CCCP.

Actually, emissions from the individual DEF units will be equal to or less than emissions from the FPL units. The lengths of startups (characterized by higher CO emissions) should be shorter for the CCCP than the WCEC because the MPS 501GAC combustors do not require steam cooling (provided from a HRSG or an auxiliary boiler).

The Department concludes that annual CO emissions from the CCCP will be less than half the amount projected by DEF. Based on the measured emissions from the WCEC MPS 501G CTGs and the very high firing temperatures for the CCCP MPS 501GAC CTGs, the Department has reasonable assurance that CO and VOC net emissions increases will be much less than the respective SERs. The Department has determined that CO and VOC emission limits are not required for this project. Initial emissions measurements of CO and VOC will be required in order to confirm this. These conclusions apply only to the CCCP project and do not necessarily apply to projects that trigger PSD review including a BACT determination for CO and VOC.

5.1.3 CTG Sulfur Dioxide (SO_2) and Sulfuric Acid Mist (SAM) Emissions

SO_2 control processes can be classified into five categories: fuel/material sulfur content limitation, absorption by a solution, adsorption on a solid bed, direct conversion to sulfur, or direct conversion to sulfuric acid. A review of the BACT determinations for CTGs contained in the BACT Clearinghouse shows that the exclusive use of low sulfur fuels constitutes the top control option for SO_2 from CTGs. Basically the use of low sulfur fuels simply means that the sulfur reduction was accomplished to very low levels at the refinery or gas conditioning plant prior to distribution.

For this project the applicant has proposed the use of clean natural gas ($\leq$ 2.0 grains sulfur (gr S)/100 SCF). This value equates to approximately 0.0057 pounds per million Btu (lb/MMBtu).

(2 gr S/100 ft^3)(ft^3/1000 Btu)(1 lb S/7000 gr S)(10^6 Btu/MMBtu)(2 lb SO_2/lb S) = 0.0057 lb/MMBtu

The NSPS Subpart KKKK Limit for SO_2 is 0.060 lb SO_2/MMBtu heat input. Compliance with the NSPS can be demonstrated by the fuel quality characteristics in a current, valid purchase contract, tariff sheet or transportation contract for the fuel, specifying that the maximum total sulfur content is less than 20 gr/100 SCF for gas (equivalent to 0.057 lb/MMBtu < 0.06 lb/MMBtu). The 20 gr limit is an order of magnitude higher the 2 gr limit proposed by DEF.

The applicant's proposed emission standards are acceptable and will insure that PSD for SO_2 and SAM will not be triggered and that the CTGs will comply with the SO_2 emission standard in NSPS Subpart KKKK.

5.1.4 CTG Particulate Matter ($PM/PM_{10}/PM_{2.5}$) Emission Standards

<u>PM/PM_{10} $PM_{2.5}$ Formation and Control Options</u>

PM, PM_{10} and $PM_{2.5}$ will be emitted from the CTGs due to incomplete fuel combustion. They are minimized by use of clean fuels and good combustion.

Natural gas will be efficiently combusted at high temperature and with excess air in the CTGs. Clean fuels are necessary to avoid damaging turbine blades and other components already exposed to very high temperature and pressure. Natural gas is an inherently clean fuel and contains no ash. Its use makes any conceivable add-on control technique for $PM/PM_{10}/PM_{2.5}$ either unnecessary or impractical.

<u>Applicant's $PM/PM_{10}/PM_{2.5}$ Proposal</u>

DEF proposes $PM/PM_{10}/PM_{2.5}$ emissions standard as a visible emissions (VE) standard of 10% opacity in conjunction with the use of inherently clean fuels. The clean fuel standards are:

- The CTGs shall fire natural gas as the primary fuel, which shall contain no more than 2.0 gr sulfur/100 SCF;
- VE shall not exceed 10% opacity based on a 6-minute average.

The applicant's proposed emission standards are acceptable and will insure that PSD for $PM/PM_{10}/PM_{2.5}$ will not be triggered.

5.1.5 Draft Emissions Standards for CCCP CTGs

The draft emission standards applicable to each CTG are summarized in **Table 10**.

Table 10. Summary of Emission Standards Applicable to Each CTG at the DEF CCCP.

Pollutant	Mode	Emission Standard [a]	Basis	Compliance Demonstration [b]
NO_X	CTG or CTG/DB	15 ppmvd @15% O_2	Subpart KKKK	30 unit rolling operating days (Compliance by CEMS)
		96 ppm @15% O_2 (<75% full CTG load)		
SO_2 [c]	CTG or CTG/DB	20 gr. sulfur/100 SCF gas [c]	Subpart KKKK	Purchase or Transportation Contract, Tariff Sheet
$PM/PM_{10}/PM_{2.5}$ [e]	CTG or CTG/DB	2.0 gr. sulfur/100 SCF gas [e]	Applicant Request Reasonable Assurance Avoids PSD	Fuel Record Keeping
		10 percent opacity 15% during startups and shutdowns [f]		Initial and Annual Visible Emissions Test

a. Concentration standards are expressed as parts per million, by volume, dry at 15 percent oxygen (ppmvd @15% O_2).
b. "Unit operating day" means a 24-hour period between 12 midnight and the following midnight during which any fuel is combusted at any time in the unit. [40 CFR 60.4420]
c. The value of 20 gr. sulfur/100 SCF satisfies the SO_2 emission standard of 0.06 lb/MMBtu contained in NSPS Subpart KKKK.
d. The lower fuel sulfur specification of 2 gr/100 SCF combined with the low NO_X emission limit, efficient combustion design and operation of the combustion turbines effectively limit $PM/PM_{10}/PM_{2.5}$ emissions and further limit SO_2 emissions.
e. Compliance with the lower fuel sulfur specification of 2 gr/100 SCF shall be determined by the methods for determination of fuel sulfur as detailed in the permit.
f. The greater value applies during specific startups and shutdowns as discussed in **Section 6.2** below.

5.1.6 Special Performance Tests for CO and VOC

Emission standards and periodic testing are not required for CO and VOC. However, the Department will require initial special performance tests for CO and VOC to confirm the short-term and long-term emission estimates provided by the applicant. These tests will further confirm that the CCCP does not trigger PSD. The test results will also provide emission factors for the CTGs that can be used in developing emission inventories for future projects in the area.

If the values in **Table 11** are exceeded, the permittee will be required to submit an application with a request for enforceable CO and VOC limits and testing procedures that further ensure that the PSD requirements of subsections 62-212.400(4) through (12), F.A.C. are not triggered.

Table 11. CO and VOC Short Term Emission Values for each CTG at the DEF CCCP.

Pollutant	Mode	Emission Standard [a,b]	Basis	Demonstration [c]
CO	CTG	4.0 ppmvd @15% O_2 and 24.0 lb/hour	Application	Initial Performance Test[h]
	CTG/DB	7.0 ppmvd @15% O_2 and 48.0 lb/hour		
VOC	CTG	0.8 ppmvd @15% O_2 and 2.8 lb/hour		
	CTG/DB	1.3 ppmvd @15% O_2 and 4.7 lb/hour		

a. The mass emission rate standards are expressed as pounds per hour (lb/hour) and are based on a turbine inlet condition of 59°F and 100% load. The results and may be adjusted to actual test conditions in accordance with the performance curves and/or equations filed with the Department.
b. Achievement of the VOC values shall be demonstrated by conducting an initial test in accordance with EPA Method 25A. Optionally, EPA Method 18 may also be performed to deduct emissions of methane and ethane. Annual testing is not required.
c. Achievement of the CO values shall be demonstrated by conducting an initial test in accordance with EPA Method 3. Annual testing is not required.

5.1.7 CTG Greenhouse Gas (GHGs, CO_2e) Emission Standards

There is no GHGs emission standard applicable to CTGs. On January 8, 2014 EPA published "Standards of Performance for Greenhouse Gas Emissions from New Stationary Sources: Electric Utility Generating Units; Proposed Rule". The *proposed* rule affects various NSPS and other regulations contained in 40 CFR Parts 60, 70, 71, et al. Link to Electric Utilities GHGs Proposed Rule

CTGs are among the sources to which the proposed rule (if finalized) would apply. For purposes of regulation of GHGs, the applicable provisions affect a particular CTG if it meets the applicability conditions below.

1. Commenced construction after January 8, 2014;
2. Has a design heat input to the turbine engine greater than 73 MW (250 MMBtu/h);
3. Combusts fossil fuel for more than 10.0 percent of the heat input during any 3 consecutive calendar years.
4. Combusts over 90% natural gas on a heat input basis on a 3 year rolling average basis; and
5. Was constructed for the purpose of supplying, and supplies, one-third or more of its potential electric output and more than 219,000 MWh net-electrical output to a utility distribution system on a 3 year rolling average basis.

The EPA is considering codifying the requirements for CTGs in either NSPS Subpart KKKK or in a new NSPS Subpart TTTT. If the requirements are codified in NSPS Subpart KKKK, then a second table (Proposed Table 2 of Subpart KKKK) will be added. Almost all GHGs emitted from CTGs are comprised of CO_2. The proposed rule will regulate only CO_2 from CTGs and not GHGs as CO_2e. The proposed emission standards applicable to units as large as the MPS 501GAC CTG are summarized in **Table 12** below. For a MPS 501GAC CTG, the proposed standard is 1,000 pounds of CO_2 per megawatt-hour of gross output (lb CO_2/MWh_{gross}), equal to (450 kilograms/MWh_{gross}).

Table 12. Proposed CO_2 Emission Limits for Stationary Combustion Turbines.

Affected Stationary Combustion Turbine	CO_2 Emission standard
Stationary combustion turbine that has a design heat input to the turbine engine of greater than 250 MW (850 MMBtu/hour).	450 kilograms of CO_2/MWh gross output (**1,000 lb/MWh**) on a 12-operating month rolling average.

According to **Table 6** above, the heat rate for a MPS 501GAC is 5,763 Btu/kWh under optimal conditions (e.g. new and clean unit operating near full load and without using the duct burners. The CO_2 emission factor is calculated as follows: Link to Fuel CO2 Factors Link to Fuel Heating Values

$$(5.76\ MMBtu/MWh_{net})(116.4\ lb\ CO_2/MMBtu\ Btu_{HHV})(1{,}089\ Btu_{HHV}/983\ Btu_{LHV})(0.98\ MWh_{net}/MWh_{gross}) = 728\ lb\ CO_2/MWh_{gross}$$

The estimate is comfortably less than the proposed rule value of 1,000 lb CO_2/MWh_{gross}. Even after accounting for actual equipment guarantees, steam turbine efficiency, degradation, cycling, low load operation or use of duct burners (that can increase heat rate and CO_2), the DEF CCCP could easily achieve the NSPS emission standard proposed by EPA.

EPA Region 4 recently issued a BACT determination for the FPL Port Everglades project based on slightly more efficient CTG technology (MPS J-Class or Siemens H-Class). The BACT GHGs emission limit for that project was 830 lb CO_2e/MWh_{net} or approximately 813 lb CO_2/MWh_{gross}.
Link to FPL Everglades GHGs Permit

For reference, the CO_2 emission rate averaged over the nine MPS 501G CTGs at the FPL WCEC was 803 lb CO_2/MWh_{gross} in 2013 according to the EPA Air Markets Program Division (AMPD) Website. Link to EPA AMPD

5.1.8 CTG GHGs Reporting Requirements

The CTGs will be subject to mandatory GHG reporting to the EPA pursuant to 40 CFR 98 - Mandatory Greenhouse Gas Reporting. The CTGs are subject to the monitoring requirements contained in 40 CFR 98, Subpart C - General Stationary Fuel Combustion Sources. Link to 40 CFR 98 Subpart C Subpart C requires reporting of CO_2, CH_4 and N_2O.

For the purposes of calculating CO_2 mass emissions from the CTGs, DEF may use CO_2 mass emissions monitoring provisions applicable to acid rain sources. These are contained in 40 CFR 75 - Continuous Emission Monitoring. Link to 40 CFR 75 The monitoring methods applicable to natural gas-fueled CTGs include CO_2-CEMS or fuel usage coupled with fuel-specific emission factors.

Natural gas fueled CTGs do not meet the conditions specified in §98.33(b)(4)(ii) or (iii) that would otherwise require the applicant to calculate and report CO_2 emissions by operating and maintaining a CO_2-CEMS. CO_2-CEMS can be used in lieu of an oxygen monitor (O_2-CEMS) for the purposes of correcting NO_X emissions to 15% O_2. A CO_2-CEMS used in lieu of the O_2-CEMS can also be used to satisfy the CO_2 reporting requirements of 40 CFR 98.

When using the non-CEMS approach, 40 CFR 98, Subpart C requires the following fuel HHV information for use with the respective fuel emission factor.

- All fuel samples (for HHV) shall be taken at a location in the fuel handling system that provides a sample representative of the fuel combusted. The fuel sampling and analysis may be performed by either the owner or operator or the supplier of the fuel.
- For natural gas, semiannual sampling and analysis is required (i.e., twice in a calendar year, with consecutive samples taken at least four months apart).

5.1.9 National Emission Standards for Hazardous Air Pollutants (NESHAP) Applicable to CTGs

According to previous permits and the present application, the CREC is and will continue to be classified as a major stationary source of hazardous air pollutants (HAP). The CTGs are potentially subject to NESHAP Subpart YYYY - Stationary Combustion Turbines. The applicability of this rule has been stayed for lean premix gas-fired combustion turbines such as planned for this project. Link to Stay of NESHAP YYYY

5.2 Emission Standards for Auxiliary Boiler

The project will include one natural-gas fueled auxiliary boiler rated at approximately 216.2 MMBtu/hour that will be used 2,000 hours/year or less. According to further information received from DEF:

> *"The aux boiler is used to startup the steam turbine quickly by providing steam seals. Without it, the startup process of the STG is somewhat slower. The auxiliary boiler will provide backup steam for startup in case the letdown system from the HRSG is not functioning properly. It will provide HRSG drum warming steam during shutdown to allow for quicker restarts."*

The auxiliary boiler will be subject to NSPS Subpart Db - Industrial-Commercial-Institutional Steam Generating Units. Link to NSPS Subpart Db Per NSPS Subpart Db, the auxiliary boiler is subject to applicable recordkeeping and reporting requirements for SO_2, NO_X, and opacity.

The auxiliary boiler is also subject to a NO_X standard of 0.10 or 0.20 lb/MMBtu of heat input and the associated monitoring and testing requirements. The exact applicable NO_X emission standard depends on whether the purchased boiler has a "high heat release rate" (HHRR) or a "low heat release rate" (LHRR). The category is not inferred from the boiler rating of 216.2 MMBtu/hour. Refer to **Table 13**.

Table 13. Applicable Emission Standards for Natural Gas-Fueled Auxiliary Boiler at CCCP.

Applicable Rules	VE [1]	NO_X (lb/MMBtu)	SO_2 and PM	HAP
NSPS Subpart Db		0.10 (LHRR) [3,4] 0.20 (HHRR) [3,5]	Clean Fuels, Fuel Records	
Rule 62-296.406, F.A.C.	20% [2]		2 gr S/100 SCF (BACT) [6]	
NESHAP Subpart DDDDD				Work Practices Tune-ups

1. Visible Emissions (VE). Per NSPS Subpart Db, no VE opacity standard applies for units that use only natural gas.
2. Per Rule 62-296.406, F.A.C., VE standard is 20% opacity except for one six-minute period/hour during which opacity ≤ 27%.
3. LHRR means low heat release rate defined as ≤ 70,000 Btu/hr per cubic foot (ft^3) of furnace volume.
4. HHRR means high heat release rate defined as > 70,000 Btu/hr-ft^3.
5. Per NSPS Subpart Db, Compliance with the NO_X standard is determined on a on a 30-day rolling average basis.
6. BACT pursuant to Rule 62-296.406, F.A.C. and not to 62-212.400, F.A.C. (PSD).

This source will also be subject to NESHAP Subpart DDDDD - Industrial, Commercial, and Institutional Boilers and Process Heaters. There are no numerical emissions standards in Subpart DDDDD that would be applicable to this natural gas fired unit. However, work practice standards and associated recordkeeping and reporting requirements apply. Link to NESHAP Subpart DDDDD

Finally, the auxiliary boiler is subject to Department Rule 62-296.406, F.A.C. - Fossil Fuel Steam Generators with Less Than 250 Million Btu Per Hour Heat Input. This rule limits opacity and requires a determination of (non-PSD) BACT for PM and SO_2. The key emission standards applicable to the auxiliary boiler are summarized in **Table 13**.

5.3 Emissions Standards for Natural Gas Process Heaters

Two Natural Gas-fueled Gas Dew Point heaters rated at approximately 11.2 MMBtu/hour are required for the project. The purpose of these units is to heat natural gas above dew point temperature and prevent condensation. The gas heaters are subject to basic recordkeeping requirements contained in NSPS Subpart Dc and annual work practices/tune-ups in accordance with NESHAP Subpart DDDDD.

5.4 Emission Standards for Diesel Emergency Generators

Two standby diesel emergency generators rated at 1,500 kilowatts (kW) are required for the project (model year 2014 and later). These will be used when electricity is not available to the site, such as during hurricanes. The emergency generators are subject to NSPS Subpart IIII and the initial notification requirements of NESHAP Subpart ZZZZ, §63.6645 and NESHAP Subpart A, §63.9(b)2.
Link to NSPS Subpart IIII Link to NESHAP Subpart ZZZZ

The applicable emission standards (Tier 2) are summarized in **Table 14**.

Table 14. Emission Standards for Diesel Emergency Generators Located at a Major HAP Source

Emergency Generator (> 560 kW, Tier 2)	CO (g/kW-hr)[1]	PM (g/kW-hr)	NMHC[2]+NO_X (g/kW-hr)	Diesel Fuel[3] (sulfur)
Model year 2006 and later	3.5	0.20	6.4	15 ppm

1. g/kW-hr means grams per kilowatt-hour.
2. NMHC means Non-Methane Hydrocarbons.
3. Nonroad diesel specification of 15 ppm is from 40 CFR part 80, subpart I – Motor Vehicle Diesel Fuel; Nonroad, Locomotive, and Marine Diesel Fuel; and ECA Marine Fuel.

The emission standards in Table 13 are consistent with: the minor stationary source status of the CCCP (non-PSD) and compliance with NSPS Subpart IIII and NESHAP Subpart ZZZZ.

5.5 Emissions Standards for Emergency Fire Pump Engines

One 575-horsepower (hp) fire pump engine is required for the project. It will be used sparingly and will fire ULSD fuel oil. The emergency fire pump engine is subject to NSPS Subpart IIII and NESHAP Subpart ZZZZ. The applicable emission standards for new emergency engines in the size range are summarized in **Table 15**.

Table 15. Emission Standards for Emergency Fire Pump Engines.

Emergency Pumps (300 < hp < 600 hp)	**CO** (g/hp-hr)[1]	**PM** (g/hp-hr)	**NMHC[2]+NO_X** (g/hp-hr)	**Diesel Fuel[3]** (sulfur)
Model year 2006 and later	3.5	0.15	2.6	15 ppm

1. g/hp-hr means grams per horsepower-hour.
2. NMHC means Non-Methane Hydrocarbons.
3. Nonroad diesel specification of 15 ppm is from 40 CFR part 80, subpart I – Motor Vehicle Diesel Fuel; Nonroad, Locomotive, and Marine Diesel Fuel; and ECA Marine Fuel.

The emission standards in **Table 15** are consistent with the minor stationary source status of the CCCP (non-PSD) and compliance with NSPS Subpart IIII and NESHAP Subpart ZZZZ.

5.6 Steam Cycle Mechanical Draft Cooling Towers

DEF proposes to include in the CCCP two 16-cell mechanical draft cooling towers with the following specifications: 58 feet high; circulating water flow rate of 195,926 gallons per minute (gpm); Total Dissolved Solids (TDS) of 30,680 parts per million by weight (ppmw); and drift eliminators with a drift rate of no more than 0.0005%.

Mechanical draft cooling towers emit $PM/PM_{10}/PM_{2.5}$ emissions. A small portion of the recirculating cooling water is entrained in the air stream and discharged from the cooling tower as drift droplets because of direct contact between the cooling water and ambient air. These water droplets contain the same concentration of dissolved solids as found in the recirculating cooling water.

Large size water droplets (e.g., greater than 200 microns) constitute the majority of the drift released. These large water droplets quickly settle out of the cooling tower exhaust stream and deposit near the tower. The remaining smaller water droplets may evaporate prior to being deposited in the area surrounding the cooling tower. These evaporated droplets represent potential $PM/PM_{10}/PM_{2.5}$ emissions because of the fine particles formed by crystallization of the dissolved solids contained in the droplets.

The only feasible technology for controlling $PM/PM_{10}/PM_{2.5}$ from wet mechanical draft cooling towers is the use of drift eliminators. Drift eliminators rely on inertial separation caused by airflow direction changes to remove water droplets from the air stream leaving the tower. Drift eliminator configurations include herringbone (blade-type), wave form, and cellular (honeycomb) designs. Drift eliminator materials of construction include ceramics, fiber-reinforced cement, metal, plastic, and wood fabricated into closely spaced slats, sheets, honeycomb assemblies, or tiles.

The Department accepts the design drift rate proposed by DEF for the CCCP of no more than 0.0005% of the circulating water flow rate. At this drift rate and with the expected TDS and flow rate of the circulating water, DEF estimates emissions of 135 and 0.9 tons/year of PM and PM_{10} emissions, respectively, between the two towers due to drift losses. $PM_{2.5}$ emissions were also estimated at 0.9 tons/year.

5.7 CTG Inlet Chiller Mechanical Draft Cooling Towers (Optional)

DEF is considering inclusion of two 6-cell mechanical draft cooling towers with the following specifications: 43 feet high; circulating water flow rate of 6,000 gpm; TDS of 3,000 ppmw; and drift eliminators with a drift rate of no more than 0.0005%.

The Department accepts the design drift rate proposed by DEF for the CCCP of no more than 0.0005% of the circulating water flow rate. At this drift rate and with the expected TDS and flow rate of the circulating water, DEF estimates emissions of 0.8 and 0.4 tons/year of PM and PM_{10} emissions, respectively, between the two towers due to drift losses. $PM_{2.5}$ emissions were also estimated at 0.4 tons/year.

6. PERIODS OF INCREASED EMISSIONS FOR THE CTGs AND CTG/DBs

6.1 NSPS Subpart KKKK Excess Emissions Requirements

According to NSPS Subpart KKKK §60.4333(a), the permittee shall operate and maintain the CTGs, air pollution control equipment, and monitoring equipment in a manner consistent with good air pollution control practices for minimizing emissions at all times including during startup, shutdown, and malfunction. This requirement is included in the draft permit with a clarification that the duct burners must also be operated in accordance with the requirement.

NSPS Subpart A, §60.7(c) and Subpart KKKK, §§60.4375 and 60.4380 further require that excess emissions be documented and reported. The draft permit will include the following condition regarding NO_X:

Excess Emissions Reporting Requirement - NO_X: The permittee shall document and report periods of excess emissions. For combined cycle CTGs using CEMS as described in §§60.4335(b) and 60.4345 such periods are any unit operating period in which the 30-day rolling average NO_X emission rate exceeds the applicable emission limit in §60.4320. For the purposes of NSPS Subpart KKKK, a "30-day rolling average NO_X emission rate" is the arithmetic average of all hourly NO_X emission data in ppm measured by the CEMS equipment for a given day and the twenty-nine unit operating days immediately preceding that unit operating day. A new 30-day average is calculated each unit operating day as the average of all hourly NO_X emissions rates for the preceding 30 unit operating days if a valid NO_X emission rate is obtained for at least 75 percent of all operating hours.
[NSPS Subpart A, §60.7(c) and NSPS Subpart KKKK, §§60.4375 and 60.4380]

The applicant is exempt from the NSPS Subpart KKKK requirements to monitor the total sulfur content of the fuel or to report excess SO_2 emissions. The reason is that the draft permit requires the permittee to submit valid purchase contract, tariff sheet or transportation contract for natural gas specifying that the maximum total sulfur content for natural gas is 20 gr/100 SCF or less. This value limits SO_2 emissions to less than the NSPS Subpart KKKK standard of 0.06 lb/MMBtu. Furthermore, the applicant is accepting a separate sulfur specification that is an order of magnitude (2 gr/100 SCF) less than the tariff value of 20 gr/100 SCF. The lower specification ensures visible emissions and particulate control.

The draft permit will include the following condition regarding SO_2:

Excess Emissions Reporting Requirement - SO_X: **Specific Condition 11** requires the permittee to submit valid purchase contract, tariff sheet or transportation contract for natural gas specifying that the maximum total sulfur content for natural gas is 20 gr/100 SCF or less. The permittee is not required by NSPS Subpart KKKK to subsequently monitor the total sulfur content of the fuel or to report excess SO_2 emissions in excess of the NSPS limitation of 20 gr/100 SCF.

6.2 Department-Based Increased Emissions Requirements

State Implementation Plan (SIP)-based excess emissions standards (i.e. Department rules) cannot vary or supersede any federal provision of the NSPS, NESHAP or Acid Rain programs. In accordance with Rules 62-210.700(4) and 62-210.200(Definitions), F.A.C., the Department will include the following permit condition:

Excess Emissions Prohibited: Excess emissions caused entirely or in part by poor maintenance, poor operation or any other equipment or process failure that may reasonably be prevented during startup, shutdown or malfunction shall be prohibited. *Malfunction* is defined as any unavoidable mechanical and/or electrical failure of air pollution control equipment or process equipment or of a process resulting in operation in an abnormal or unusual manner. [Rules 62-210.700(4) and 62-210.200(Definitions), F.A.C.]

According to Rule 62-210.700(1), F.A.C., "*Excess emissions resulting from startup, shutdown or malfunction of any emissions unit shall be permitted providing (1) best operational practices to minimize emissions are adhered to and (2) the duration of excess emissions shall be minimized but in no case exceed two hours in any 24 hour period unless specifically authorized by the Department for longer duration.*"

The Department will include the following condition that requires the permittee to employ the best operational practices (BOPs). This condition serves a purpose similar to the analogous NSPS requirement to employ good air pollution control practices.

Best Operational Practices (BOPs) Required: The permittee shall train and require all operators and supervisors to operate and maintain the CTGs, duct burners, air pollution control equipment, and monitoring equipment in a manner consistent with best operational practices (BOPs) for minimizing emissions at all times including during startup, shutdown, and malfunction.
[Rules 62-4.070(3) and 62-210.700(1), F.A.C.]

According to Rule 62-210.700(5), F.A.C., *"Considering operational variations in types of industrial equipment operations affected by this rule, the Department may adjust maximum and minimum factors to provide reasonable and practical regulatory controls consistent with the public interest"*.

Rather than allowing excess emissions of undefined magnitude, the Department will establish different SIP-based emission standards for visible emissions (VE measured as opacity) for normal (steady-state) operation and for periods of specifically defined startups and shutdowns as follows:

Visible Emissions (VE) Emission Standards:

a. *VE emission standard during normal operation:* VE from each CTG or CTG/DB during normal operation shall not exceed 10% opacity based on a 30-minute test conducted annually in accordance with EPA Method 9 - Visual Determination of Opacity.
[Application No. 0170004-047-AC; Rule 62-4.070, F.A.C.]

b. *Startup and shutdown definitions: Startup* is defined as the commencement of operation of any emissions unit which has shut down or ceased operation for a period of time sufficient to cause temperature, pressure, chemical or pollution control device imbalances, which result in excess emissions. *Shutdown* is the cessation of the operation of an emissions unit for any purpose.
[Rule 62-210.200(Definitions), F.A.C.]

c. *Alternate VE emission standard during startups and shutdowns:* VE from each CTG or CTG/DB during startups and shutdowns shall not exceed 15% opacity except for up to one, 6-minute averaging period during a 30-minute period, during which VE shall not exceed 20% opacity. This alternate VE standard and set of durations shall apply during the specific types of startups and shutdowns described below provided that the operator employs the best operational practices to minimize the magnitude and duration of emissions during such incidents.

d. *STG System Cold Startup*: The applicability of the alternate VE standard during startup of a cold steam turbine system shall not exceed 480 minutes in any 24-hour period. A *"cold startup of the steam turbine system"* is defined for the purposes of this permit section as startup of a 2-on-1 combined cycle system following a shutdown of the steam turbine lasting at least 48 hours.

   {Permitting Note: During a cold startup of the STG system, each CTG/HRSG system is sequentially brought on line at low load to gradually increase the temperature of the STG and prevent thermal metal fatigue.}

e. *STG/HRSG Hot Startup*: The applicability of the alternate VE standard during startup of a hot STG/HRSG system shall not exceed 240 minutes in any 24-hour period. A *"hot startup of the STG/HRSG system"* is defined for the purposes of this permit section as startup of a 2-on-1 combined cycle system following a shutdown of the steam turbine lasting less than 48 hours.

f. *CTG/HRSG System Cold Startup*: The applicability of the alternate VE standard during startup of a cold CTG/HRSG system shall not exceed 240 minutes in any 24-hour period. *"Cold startup of a CTG/HRSG system"* is defined for the purposes of this permit section as a startup and blending into combined cycle service after that CTG/HRSG has been off-line for four hours or longer.

g. *CTG/HRSG System Warm Startup*: The applicability of the alternate VE standard during startup of a warm CTG/HRSG system shall not exceed two (2) hours in any 24-hour period. *"Warm startup of a CTG/HRSG system"* is defined for the purposes of this permit section as a startup and blending into combined cycle service after that CTG/HRSG has been off-line for less than four hours.

h. *Shutdown of Combined Cycle Operation:* The applicability of the alternate VE standard during shut down of a combined cycle block shall not exceed 180 minutes hours in any 24-hour period for each CTG/HRSG system.

i. The events described in paragraphs d. through h. of this condition are considered separately and each may occur independently within any 24-hour period. Annual compliance testing is not required for these events.

[Application No. 0170004-047-AC; Rules 62-4.070(3), 62-210.200(Definitions) and 62-210.700(5), F.A.C.]

7. PRELIMINARY DETERMINATION

The Department makes a preliminary determination that the proposed project will comply with all applicable state and federal air pollution regulations as conditioned by the Draft Permit. This determination is based on a technical review of the complete application, reasonable assurances provided by the applicant, and the conditions specified in the Draft Permit. Alvaro Linero is project engineer responsible for preparing the draft permit and technical evaluation. Details of the analyses may be obtained by contacting Mr. Linero by email at alvaro.linero@dep.state.fl.us or by phone at 850-717-9076.