TIERRA CONSULTING GROUP, INC.
ENVIRONMENTAL ENGINEERING & CONSULTING
5815 N ANDREWS WAY, SUITE B, FORT LAUDERDALE, FL 33309
TELEPHONE (954) 202 9226 TOLL FREE (877) 941-9837 FAX (954) 202 9227

LICENSED ENGINEERING, ASBESTOS, & GEOLOGICAL BUSINESS

September 20, 2011

Armando I. Sarasua, P.E.
Permitting Supervisor, Air Program, Northwest District
Florida Department of Environmental Protection
160 Governmental Center, Suite 308 Pensacola, Florida 32502-5794

RE: FESOP Modification
Tyndall Air Force Base

Dear Mr. Sarasua,

Please find enclosed the FESOP Modification for the installation of three 2-million BTU boilers. Please note that the following Attachments have also been included:

- **Attachment A – Area Map and Engineering Drawings**
- **Attachment B – Boiler Schematic and Cut Sheets**
- **Attachment C – Boiler Manufacturer's Installation/Operation/Maintenance Manual**
- **Attachment D – Potential to Emit (PTE) Spreadsheet (at maximum) and Actual Emissions (based on existing operation schedule)**
- **Attachment E – Current FESOP**

I will follow up later this week to ensure that you have received this package. As I explained in our conversations, we have attempted to make this a comprehensive submittal to expedite approval for the Tyndall Air Force Base. Naturally, we understand your department is understaffed at this time, so we would be grateful for any assistance you may be able to provide. With that objective in mind, thank you again for all your assistance and please feel free to contact me directly at (954) 298-5986.

Sincerely,

Robert C. Bonewit, J.D., LEED AP
Senior Engineer

RECEIVED
OCT 24 2011
NORTHWEST FLORIDA
DEP

Department of Environmental Protection

Division of Air Resource Management

0050024-011-AC

APPLICATION FOR AIR PERMIT - LONG FORM

I. APPLICATION INFORMATION

Air Construction Permit – Use this form to apply for an air construction permit:

- For any required purpose at a facility operating under a federally enforceable state air operation permit (FESOP) or Title V air operation permit;
- For a proposed project subject to prevention of significant deterioration (PSD) review, nonattainment new source review, or maximum achievable control technology (MACT);
- To assume a restriction on the potential emissions of one or more pollutants to escape a requirement such as PSD review, nonattainment new source review, MACT, or Title V; or
- To establish, revise, or renew a plantwide applicability limit (PAL).

Air Operation Permit – Use this form to apply for:

- An initial federally enforceable state air operation permit (FESOP); or
- An initial, revised, or renewal Title V air operation permit.

To ensure accuracy, please see form instructions.

Identification of Facility

1. Facility Owner/Company Name: **U.S. Air Force**	
2. Site Name: **Tyndall Air Force Base**	
3. Facility Identification Number: 0050024-010-AF	
4. Facility Location Street Address or Other Locator: City: 5 miles southeast of Panama City County: Bay Zip Code: n/a	
5. Relocatable Facility? ☐ Yes ☒ No	6. Existing Title V Permitted Facility? ☐ Yes ☒ No

Application Contact

1. Application Contact Name: Miguel Plaza
2. Application Contact Mailing Address... Organization/Firm: **Tyndall Airforce Base** Street Address: 325th CES/CEAN/STOP42, 119 Alabama Avenue City: Tyndall AFB State: FL Zip Code: 32403-5014
3. Application Contact Telephone Numbers... Telephone: (850) 283 - 2398 ext. Fax: (850) 283 - 3854
4. Application Contact E-mail Address: miguel.plaza@tyndall.af.mil

Application Processing Information (DEP Use)

1. Date of Receipt of Application:	3. PSD Number (if applicable):
2. Project Number(s):	4. Siting Number (if applicable):

RECEIVED
OCT 24 2011
NORTHWEST FLORIDA
DEP

APPLICATION INFORMATION

Purpose of Application

This application for air permit is being submitted to obtain: (Check one)

Air Construction Permit

[x] Air construction permit.

[ ] Air construction permit to establish, revise, or renew a plantwide applicability limit (PAL).

[ ] Air construction permit to establish, revise, or renew a plantwide applicability limit (PAL), and separate air construction permit to authorize construction or modification of one or more emissions units covered by the PAL.

Air Operation Permit

[ ] Initial Title V air operation permit.

[ ] Title V air operation permit revision.

[ ] Title V air operation permit renewal.

[ ] Initial federally enforceable state air operation permit (FESOP) where professional engineer (PE) certification is required.

[ ] Initial federally enforceable state air operation permit (FESOP) where professional engineer (PE) certification is not required.

Air Construction Permit and Revised/Renewal Title V Air Operation Permit (Concurrent Processing)

[ ] Air construction permit and Title V permit revision, incorporating the proposed project.

[ ] Air construction permit and Title V permit renewal, incorporating the proposed project.

Note: By checking one of the above two boxes, you, the applicant, are requesting concurrent processing pursuant to Rule 62-213.405, F.A.C. In such case, you must also check the following box:

[ ] I hereby request that the department waive the processing time requirements of the air construction permit to accommodate the processing time frames of the Title V air operation permit.

Application Comment

The current outdated 5-million BTU boiler located in building #315 is being replaced by three 2-million BTU more efficient boilers that will remain compliant with existing FESOP emission requirements.

APPLICATION INFORMATION

Scope of Application

Emissions Unit ID Number	Description of Emissions Unit	Air Permit Type	Air Permit Processing Fee
315-1	2-million BTU Boiler System (to be installed)	FESOP/ACIF	$1000.00
315-2	2-million BTU Boiler System (to be installed)	FESOP/ACIF	
315-3	2-million BTU Boiler System (to be installed)	FESOP/ACIF	
315	5-million BTU Boiler System (to be removed)		

Application Processing Fee

Check one: [X] Attached - Amount: $ 1000.00 [ ] Not Applicable

APPLICATION INFORMATION

Owner/Authorized Representative Statement

Complete if applying for an air construction permit or an initial FESOP.

1. Owner/Authorized Representative Name : U.S. Air Force
   Douglas W. Gilpin, Lt. Colonel, USAF

2. Owner/Authorized Representative Mailing Address...
   Organization/Firm: Tyndall Air Force Base
   Street Address: 119 Alabama Ave, Stop 42
   Tyndall Air Force Base, 32403

   City: Bay State: Florida Zip Code: 32403

3. Owner/Authorized Representative Telephone Numbers...
   Telephone: (850) 283 - 3283 ext. Fax: (850) 283 - 3983

4. Owner/Authorized Representative E-mail Address: Douglas.Gilpin@Tyndall.AF.MIL

5. Owner/Authorized Representative Statement:

   I, the undersigned, am the owner or authorized representative of the corporation, partnership, or other legal entity submitting this air permit application. To the best of my knowledge, the statements made in this application are true, accurate and complete, and any estimates of emissions reported in this application are based upon reasonable techniques for calculating emissions. I understand that a permit, if granted by the department, cannot be transferred without authorization from the department.

   DL Wil 15 Oct 4

   Signature Date

APPLICATION INFORMATION

Application Responsible Official Certification

Complete if applying for an initial, revised, or renewal Title V air operation permit or concurrent processing of an air construction permit and revised or renewal Title V air operation permit. If there are multiple responsible officials, the "application responsible official" need not be the "primary responsible official."

1. Application Responsible Official Name:
2. Application Responsible Official Qualification (Check one or more of the following options, as applicable): ☐ For a corporation, the president, secretary, treasurer, or vice-president of the corporation in charge of a principal business function, or any other person who performs similar policy or decision-making functions for the corporation, or a duly authorized representative of such person if the representative is responsible for the overall operation of one or more manufacturing, production, or operating facilities applying for or subject to a permit under Chapter 62-213, F.A.C. ☐ For a partnership or sole proprietorship, a general partner or the proprietor, respectively. ☐ For a municipality, county, state, federal, or other public agency, either a principal executive officer or ranking elected official. ☐ The designated representative at an Acid Rain source or CAIR source.
3. Organization/Firm: Street Address: City: State: Zip Code:
4.Applicant Responsible Party Telephone: ext. Fax:
5. Application Responsible Official E-mail Address:

6. Application Responsible Official Certification:

I, the undersigned, am a responsible official of the Title V source addressed in this air permit application. I hereby certify, based on information and belief formed after reasonable inquiry, that the statements made in this application are true, accurate and complete and that, to the best of my knowledge, any estimates of emissions reported in this application are based upon reasonable techniques for calculating emissions. The air pollutant emissions units and air pollution control equipment described in this application will be operated and maintained so as to comply with all applicable standards for control of air pollutant emissions found in the statutes of the State of Florida and rules of the Department of Environmental Protection and revisions thereof and all other applicable requirements identified in this application to which the Title V source is subject. I understand that a permit, if granted by the department, cannot be transferred without authorization from the department, and I will promptly notify the department upon sale or legal transfer of the facility or any permitted emissions unit. Finally, I certify that the facility and each emissions unit are in compliance with all applicable requirements to which they are subject, except as identified in compliance plan(s) submitted with this application.

_____ _____

Signature Date

APPLICATION INFORMATION

Professional Engineer Certification

1. Professional Engineer Name: Robert Lee Vinson III
   Registration Number: 53438
2. Professional Engineer Mailing Address...
   Organization/Firm: RLV Consulting
   Street Address: 2655 Triple Tree
   City: San Antonio State: TX Zip Code: 78263
3. Professional Engineer Telephone Numbers...
   Telephone: (210) 872 - 9220 ext. Fax: (210) 648 - 5938
4. Professional Engineer E-mail Address: rlvconsulting@satx.rr.com
5. Professional Engineer Statement:

I, the undersigned, hereby certify, except as particularly noted herein, that:*

(1) To the best of my knowledge, there is reasonable assurance that the air pollutant emissions unit(s) and the air pollution control equipment described in this application for air permit, when properly operated and maintained, will comply with all applicable standards for control of air pollutant emissions found in the Florida Statutes and rules of the Department of Environmental Protection; and

(2) To the best of my knowledge, any emission estimates reported or relied on in this application are true, accurate, and complete and are either based upon reasonable techniques available for calculating emissions or, for emission estimates of hazardous air pollutants not regulated for an emissions unit addressed in this application, based solely upon the materials, information and calculations submitted with this application.

(3) If the purpose of this application is to obtain a Title V air operation permit (check here ☐, if so), I further certify that each emissions unit described in this application for air permit, when properly operated and maintained, will comply with the applicable requirements identified in this application to which the unit is subject, except those emissions units for which a compliance plan and schedule is submitted with this application.

(4) If the purpose of this application is to obtain an air construction permit (check here ☒, if so) or concurrently process and obtain an air construction permit and a Title V air operation permit revision or renewal for one or more proposed new or modified emissions units (check here ☐, if so), I further certify that the engineering features of each such emissions unit described in this application have been designed or examined by me or individuals under my direct supervision and found to be in conformity with sound engineering principles applicable to the control of emissions of the air pollutants characterized in this application.

(5) If the purpose of this application is to obtain an initial air operation permit or operation permit revision or renewal for one or more newly constructed or modified emissions units (check here , if so), I further certify that, with the exception of any changes detailed as part of this application, each such emissions unit has been constructed or modified in substantial accordance with the information given in the corresponding application for air construction permit and with all provisions contained in such permit.

Signature 17 September 2011 Date

(seal)

* Attach any exception to certification statement.

Certification Statement Exceptions

Tyndall AFB Air Construction Permit Application Review, existing permit number: 0050024-010-AF

Drawings provided by CAPE for review of proposed modifications to Building 315 at Tyndall AFB are labeled as 100 percent Design Submission. However, the drawings are not signed and sealed, the title blocks are incomplete (e.g., Designed by, Checked By, etc. information is not provided), and three firms are identified on the Title Sheet but no firm is identified as the Engineer of Record.

The drawings (and the supporting Specifications provided) appear to be complete and professionally prepared. However, changes from the drawings provided for review (e.g., change in exhaust stack elevation) could have minor impact on the information provided in the permit application.

Robert L. Vinson III, P.E.

II. FACILITY INFORMATION

A. GENERAL FACILITY INFORMATION

Facility Location and Type

1. Facility UTM Coordinates... Zone 16 East (km) 635.89 North (km) 3327.25		2. Facility Latitude/Longitude... Latitude (DD/MM/SS) 30/03/21 Longitude (DD/MM/SS) 85/35/31	
3. Governmental Facility Code: 1	4. Facility Status Code: A	5. Facility Major Group SIC Code: 97	6. Facility SIC(s): 9711
7. Facility Comment : The facility is the United State Air Force Tyndall Air Force Base (existing permit number: 0050024-010-AF).			

Facility Contact

1. Facility Contact Name: **Miguel Plaza**
2. Facility Contact Mailing Address: Organization/Firm: United States Air Force, Tyndall Air Force Base Street Address: 325th CES/CEAN/STOP42, 119 Alabama Avenue City: Tyndall AFB State: FL Zip Code: 32403-5014
3. Facility Contact Telephone Numbers: Telephone: (850) 283 - 2398 ext. Fax: (850) 283 - 3854
4. Facility Contact E-mail Address: miguel.plaza@tyndall.af.mil

Facility Primary Responsible Official

Complete if an "application responsible official" is [illegible]ified in Section I that is not the facility "primary responsible official."

1. Facility Primary Responsible Official Name:
2. Facility Primary Responsible Official Mailing Address... Organization/Firm: Street Address: City: State: Zip Code:
3. Facility Primary Responsible Official Telephone Numbers... Telephone: ( ) - ext. Fax: ( ) -
4. Facility Primary Responsible Official E-mail Address:

FACILITY INFORMATION

Facility Regulatory Classifications

Check all that would apply *following* completion of all projects and implementation of all other changes proposed in this application for air permit. Refer to instructions to distinguish between a "major source" and a "synthetic minor source."

1. ☐ Small Business Stationary Source	☐ Unknown
2. ☒ Synthetic Non-Title V Source	
3. ☐ Title V Source	
4. ☐ Major Source of Air Pollutants, Other than Hazardous Air Pollutants (HAPs)	
5. ☒ Synthetic Minor Source of Air Pollutants, Other than HAPs	
6. ☐ Major Source of Hazardous Air Pollutants (HAPs)	
7. ☒ Synthetic Minor Source of HAPs	
8. ☐ One or More Emissions Units Subject to NSPS (40 CFR Part 60)	
9. ☐ One or More Emissions Units Subject to Emission Guidelines (40 CFR Part 60)	
10. ☐ One or More Emissions Units Subject to NESHAP (40 CFR Part 61 or Part 63)	
11. ☐ Title V Source Solely by EPA Designation (40 CFR 70.3(a)(5))	
12. Facility Regulatory Classifications Comment:	

FACILITY INFORMATION

List of Pollutants Emitted by Facility

1. Pollutant Emitted	2. Pollutant Classification	3. Emissions Cap [Y or N]?
CO		Y
SO2		Y
VOC		Y
NOx		Y
HAPs		Y

B. EMISSIONS CAPS

Facility-Wide or Multi-Unit Emissions Caps

1. Pollutant Subject to Emissions Cap	2. Facility-Wide Cap [Y or N]? (all units)	3. Emissions Unit ID's Under Cap (if not all units)	4. Hourly Cap (lb/hr)	5. Annual Cap (ton/yr)	6. Basis for Emissions Cap
Carbon Monoxide (CO)	Y			90	FESOP
Sulfur Dioxide (SO2)	Y			90	FESOP
VOCs	Y			80	FESOP
NOx	Y			90	FESOP
HAPs	Y			8/21	FESOP

7. Facility-Wide or Multi-Unit Emissions Cap Comment:

C. FACILITY ADDITIONAL INFORMATION

Additional Requirements for All Applications, Except as Otherwise Stated

1.	Facility Plot Plan: (Required for all permit applications, except Title V air operation permit revision applications if this information was submitted to the department within the previous five years and would not be altered as a result of the revision being sought) [X] Attached, Document ID:**ATT. A** [ ] Previously Submitted, Date:_____
2.	Process Flow Diagram(s): (Required for all permit applications, except Title V air operation permit revision applications if this information was submitted to the department within the previous five years and would not be altered as a result of the revision being sought) [X] Attached, Document ID: **ATT. B** [ ] Previously Submitted, Date:_____
3.	Precautions to Prevent Emissions of Unconfined Particulate Matter: (Required for all permit applications, except Title V air operation permit revision applications if this information Swas submitted to the department within the previous five years and would not be altered as a result of the revision being sought) [x] Attached, Document ID: **ATT C** [ ] Previously Submitted, Date:_____

Additional Requirements for Air Construction Permit Applications

1.	Area Map Showing Facility Location: [x] Attached, Document ID:ATT A___ [ ] Not Applicable (existing permitted facility)
2.	Description of Proposed Construction, Modification, or Plantwide Applicability Limit (PAL): [x] Attached, Document ID:_____
3.	Rule Applicability Analysis: [ ] Attached, Document ID:_____
4.	List of Exempt Emissions Units: [ ] Attached, Document ID:_____ [x] Not Applicable (no exempt units at facility)
5.	Fugitive Emissions Identification: [ ] Attached, Document ID:_____ [x] Not Applicable
6.	Air Quality Analysis (Rule 62-212.400(7), F.A.C.): [ ] Attached, Document ID:_____ [x] Not Applicable
7.	Source Impact Analysis (Rule 62-212.400(5), F.A.C.): [ ] Attached, Document ID:_____ [x] Not Applicable
8.	Air Quality Impact since 1977 (Rule 62-212.400(4)(e), F.A.C.): [ ] Attached, Document ID:_____ [x] Not Applicable
9.	Additional Impact Analyses (Rules 62-212.400(8) and 62-212.500(4)(e), F.A.C.): [ ] Attached, Document ID:_____ [x] Not Applicable
10.	Alternative Analysis Requirement (Rule 62-212.500(4)(g), F.A.C.): [ ] Attached, Document ID:_____ [x] Not Applicable

C. FACILITY ADDITIONAL INFORMATION (CONTINUED)

Additional Requirements for FESOP Applications

1. List of Exempt Emissions Units:
   ☐ Attached, Document ID:_____ ☒ Not Applicable (no exempt units at facility)

Additional Requirements for Title V Air Operation Permit Applications

1. List of Insignificant Activities: (Required for initial/renewal applications only)
   ☐ Attached, Document ID:_____ ☒ Not Applicable (revision application)

2. Identification of Applicable Requirements: (Required for initial/renewal applications, and for revision applications if this information would be changed as a result of the revision being sought)
   ☐ Attached, Document ID:_____
   ☒ Not Applicable (revision application with no change in applicable requirements)

3. Compliance Report and Plan: (Required for all initial/revision/renewal applications)
   ☒ Attached, Document ID: ATT. C (note: fuel throughput and emissions will be tracked annually and submitted as necessary to the FDEP.)

   Note: A compliance plan must be submitted for each emissions unit that is not in compliance with all applicable requirements at the time of application and/or at any time during application processing. The department must be notified of any changes in compliance status during application processing.

4. List of Equipment/Activities Regulated under Title VI: (If applicable, required for initial/renewal applications only)
   ☐ Attached, Document ID:_____
   ☐ Equipment/Activities Onsite but Not Required to be Individually Listed
   ☒ Not Applicable

5. Verification of Risk Management Plan Submission to EPA: (If applicable, required for initial/renewal applications only)
   ☐ Attached, Document ID:_____ ☒ Not Applicable

6. Requested Changes to Current Title V Air Operation Permit:
   ☐ Attached, Document ID:_____ ☒ Not Applicable

C. FACILITY ADDITIONAL INFORMATION (CONTINUED)

Additional Requirements for Facilities Subject to Acid Rain, CAIR, or Hg Budget Program

1. Acid Rain Program Forms:

   Acid Rain Part Application (DEP Form No. 62-210.900(1)(a)):
   ☐ Attached, Document ID:_____ ☐ Previously Submitted, Date:_____
   [x] Not Applicable (not an Acid Rain source)

   Phase II NO_X Averaging Plan (DEP Form No. 62-210.900(1)(a)1.):
   ☐ Attached, Document ID:_____ ☐ Previously Submitted, Date:_____
   [x] Not Applicable

   New Unit Exemption (DEP Form No. 62-210.900(1)(a)2.):
   ☐ Attached, Document ID:_____ ☐ Previously Submitted, Date:_____
   [x] Not Applicable

2. CAIR Part (DEP Form No. 62-210.900(1)(b)):
   ☐ Attached, Document ID:_____ ☐ Previously Submitted, Date:_____
   ☐ Not Applicable (not a CAIR source)

Additional Requirements Comment

All emissions from the units to be installed have been estimated based on manufacturers specifications in the spreadsheet located in ATT D.

Note: Total fuel throughput for the existing 5 million BTU boiler is 1.6 million cubic feet of natural gas per year. While the new equipment is more efficient, the total BTUs are being increased from 5 million BTUs to 6 million BTUs. Therefore the 1.6 million cubic feet per year has been multiplied by 6/5 to account for the addition of 1 million BTUs. It is important to note that the efficiency of the new equipment and improved insulation and ventilation of Building 315 should reduce the overall system operation, fuel use, and emissions.

III. EMISSIONS UNIT INFORMATION

Title V Air Operation Permit Application - For Title V air operation permitting only, emissions units are classified as regulated, unregulated, or insignificant. If this is an application for an initial, revised or renewal Title V air operation permit, a separate Emissions Unit Information Section (including subsections A through I as required) must be completed for each regulated and unregulated emissions unit addressed in this application. Some of the subsections comprising the Emissions Unit Information Section of the form are optional for unregulated emissions units. Each such subsection is appropriately marked. Insignificant emissions units are required to be listed at Section II, Subsection C.

Air Construction Permit or FESOP Application - For air construction permitting or federally enforceable state air operation permitting, emissions units are classified as either subject to air permitting or exempt from air permitting. The concept of an "unregulated emissions unit" does not apply. If this is an application for an air construction permit or FESOP, a separate Emissions Unit Information Section (including subsections A through I as required) must be completed for each emissions unit subject to air permitting addressed in this application for air permit. Emissions units exempt from air permitting are required to be listed at Section II, Subsection C.

Air Construction Permit and Revised/Renewal Title V Air Operation Permit Application – Where this application is used to apply for both an air construction permit and a revised or renewal Title V air operation permit, each emissions unit is classified as either subject to air permitting or exempt from air permitting for air construction permitting purposes, and as regulated, unregulated, or insignificant for Title V air operation permitting purposes. A separate Emissions Unit Information Section (including subsections A through I as required) must be completed for each emissions unit addressed in this application that is subject to air construction permitting and for each such emissions unit that is a regulated or unregulated unit for purposes of Title V permitting. (An emissions unit may be exempt from air construction permitting but still be classified as an unregulated unit for Title V purposes.) Emissions units classified as insignificant for Title V purposes are required to be listed at Section II, Subsection C.

If submitting the application form in hard copy, the number of this Emissions Unit Information Section and the total number of Emissions Unit Information Sections submitted as part of this application must be indicated in the space provided at the top of each page.

EMISSIONS UNIT INFORMATION
Section [ ] of [ ]

A. GENERAL EMISSIONS UNIT INFORMATION

Title V Air Operation Permit Emissions Unit Classification

1. Regulated or Unregulated Emissions Unit? (Check one, if applying for an initial, revised or renewal Title V air operation permit. Skip this item if applying for an air construction permit or FESOP only.)

   [x] The emissions unit addressed in this Emissions Unit Information Section is a regulated emissions unit.

   [ ] The emissions unit addressed in this Emissions Unit Information Section is an unregulated emissions unit.

Emissions Unit Description and Status

1. Type of Emissions Unit Addressed in this Section: (Check one)

   [x] This Emissions Unit Information Section addresses, as a single emissions unit, a single process or production unit, or activity, which produces one or more air pollutants and which has at least one definable emission point (stack or vent).

   [ ] This Emissions Unit Information Section addresses, as a single emissions unit, a group of process or production units and activities which has at least one definable emission point (stack or vent) but may also produce fugitive emissions.

   [ ] This Emissions Unit Information Section addresses, as a single emissions unit, one or more process or production units and activities which produce fugitive emissions only.

2. Description of Emissions Unit Addressed in this Section
Type 1 – Single process - -The existing 5-millon BTU boiler (EU 315) is being replaced by a set of three 2-million BTU boilers. (EUs 315-1, 315-2, and 315-3. All 3 new emission units are identical and connected to their own stack.:

3. Emissions Unit Identification Number: 315-1, 315-2, 315-3

4. Emissions Unit Status Code:	5. Commence Construction Date:	6. Initial Startup Date: 11/1/11 (estimated	7. Emissions Unit Major Group SIC Code:
C			97

8. Federal Program Applicability: (Check all that apply)

   [ ] Acid Rain Unit

   [ ] CAIR Unit

9. Package Unit: Each of the three 2-million BTU units is a package unit
Manufacturer: Fulton Reliance Series Hydronic Boilers Model Number: RLN-2000

10. Generator Nameplate Rating: N//A

11. Emissions Unit Comment:

EMISSIONS UNIT INFORMATION
Section [ ] of [ ]

Emissions Unit Control Equipment/Method: Control ___ of ___

1. Control Equipment/Method Description: N/A. no control equipment is being added to the system and is unnecessary given the relatively low emission rate and PTE calculations compared to the overall FESOP limits for the facility.
2. Control Device or Method Code:N/A

Emissions Unit Control Equipment/Method: Control ___ of ___

1. Control Equipment/Method Description:
2. Control Device or Method Code:

Emissions Unit Control Equipment/Method: Control ___ of ___

1. Control Equipment/Method Description:
2. Control Device or Method Code:

Emissions Unit Control Equipment/Method: Control ___ of ___

1. Control Equipment/Method Description:
2. Control Device or Method Code:

B. EMISSIONS UNIT CAPACITY INFORMATION
(Optional for unregulated emissions units.)

Emissions Unit Operating Capacity and Schedule

1. Maximum Process or Throughput Rate: 2,000 cubic feet per hour of natural gas per unit for a total of 6,000 foot per cubic feet per hour (3 units)
2. Maximum Production Rate:
3. Maximum Heat Input Rate: 2 million BTUs per hour per unit for a total of 6 million BTU per hour
4. Maximum Incineration Rate: pounds/hr N/A tons/day
5. Requested Maximum Operating Schedule: 24 hours/day N/A days/week N/A weeks/year 4380 hours/year (1/2 year)
6. Operating Capacity/Schedule Comment: The system is scheduled to be operated less than 6 months per year given the historical tracking data and the proposed improvements in the building. A conservative estimate of 12 months (8,760 hours) has been used for PTE calculations and 6 months has been used to calculate actual emissions (4,380 hours).

EMISSIONS UNIT INFORMATION
Section [ ] of [ ]

C. EMISSION POINT (STACK/VENT) INFORMATION
(Optional for unregulated emissions units.)

Emission Point Description and Type

1. Identification of Point on Plot Plan or Flow Diagram: See ATT A	2. Emission Point Type Code: 1 (individual stack for each boiler)

3. Descriptions of Emission Points Comprising this Emissions Unit for VE Tracking:
No VE necessary due to clean burning fuel and efficiency of units.

However, stacks are estimated to be a minimum of 50 feet above ground surface through roof of building 315 with weather caps to prevent rain water from entering the emission system.

4. ID Numbers or Descriptions of Emission Units with this Emission Point in Common:
None

5. Discharge Type Code: W	6. Stack Height: Minimum of 25 feet (roof height)	7. Exit Diameter: 8" or .67 feet
8. Exit Temperature: Max of 295°F	9. Actual Volumetric Flow Rate: 600-700 acfm	10. Water Vapor: N/A%

11. Maximum Dry Standard Flow Rate: 600-700 dscfm	12. Nonstack Emission Point Height: N/A feet
13. Emission Point UTM Coordinates... Zone: TBD East (km): North (km):	14. Emission Point Latitude/Longitude... Latitude (DD/MM/SS) TBD after install Longitude (DD/MM/SS) TBD after install

15. Emission Point Comment:
Coordinates will be taken after installation and communicated to the FDEP for their records.

EMISSIONS UNIT INFORMATION
Section [ ] of [ ]

D. SEGMENT (PROCESS/FUEL) INFORMATION

Segment Description and Rate: Segment __ of __

1. Segment Description (Process/Fuel Type): Natural Gas Only, estimated at 1,920,000 cubic feet per year (or existing fuel usage of 1.6 million cubic feet per year x 6 mill BTU/5 mill BTU) to account for total BTU increase of replacement of existing 5 million BTU unit with 6 million BTU unit.		
2. Source Classification Code (SCC): 10300603	3. SCC Units: Cubic feet	
4. Maximum Hourly Rate: 6,000 (2,000 x 3 units)	5. Maximum Annual Rate: 52,560,000 cu feet	6. Estimated Annual Activity Factor: N/A
7. Maximum % Sulfur: See ATT D for calcs	8. Maximum % Ash: See ATT D for calcs	9. Million Btu per SCC Unit: 2 million BTU x 3 units = 6 million BTU (total)
10. Segment Comment:		

EMISSIONS UNIT INFORMATION
Section [ ] of [ ]

D. SEGMENT (PROCESS/FUEL) INFORMATION (CONTINUED)

Segment Description and Rate: Segment __ of __

1. Segment Description (Process/Fuel Type): Natural Gas Only – 2 million cubic feet per hour x 3 units = 6 million BTUs per hour.		
2. Source Classification Code (SCC): N/A	3. SCC Units: N/A	
4. Maximum Hourly Rate: 2 million BTU per hour/ 1,000 BTU per cubic = 2,000 cubic feet per hour per unit or 6,000 cubic feet	5. Maximum Annual Rate: 52,560,000 cubic feet running for 8760 hours per year	6. Estimated Annual Activity Factor:
7. Maximum % Sulfur:	8. Maximum % Ash:	9. Million Btu per SCC Unit:

10. Segment Comment:

Segment Description and Rate: Segment __ of __

1. Segment Description (Process/Fuel Type):		
2. Source Classification Code (SCC):	3. SCC Units:	
4. Maximum Hourly Rate:	5. Maximum Annual Rate:	6. Estimated Annual Activity Factor:
7. Maximum % Sulfur:	8. Maximum % Ash:	9. Million Btu per SCC Unit:
10. Segment Comment:		

E. EMISSIONS UNIT POLLUTANTS

List of Pollutants Emitted by Emissions Unit

1. Pollutant Emitted	2. Primary Control Device Code	3. Secondary Control Device Code	4. Pollutant Regulatory Code
CO	None		
SO2	None		
VOC	None		
NOx	None		
HAPs	None		

F1. EMISSIONS UNIT POLLUTANT DETAIL INFORMATION – POTENTIAL, FUGITIVE, AND ACTUAL EMISSIONS

(Optional for unregulated emissions units.)

Complete a Subsection F1 for each pollutant identified in Subsection E if applying for an air construction permit or concurrent processing of an air construction permit and a revised or renewal Title V operation permit. Complete for each emissions-limited pollutant identified in Subsection E if applying for an air operation permit.

Potential, Estimated Fugitive, and Baseline & Projected Actual Emissions

1. Pollutant Emitted: See page 5 of original FESOP for list of regulated pollutants and ATT D for calculations for 3 boilers	2. Total Percent Efficiency of Control: N/A
3. Potential Emissions: All PTE for pollutants are presented in ATT D in lbs per hour and tons per year based on 8760 hours. lb/hour tons/year	4. Synthetically Limited? [X] Yes [ ] No
5. Range of Estimated Fugitive Emissions (as applicable): to tons/year	
6. Emission Factor: Reference:	7. Emissions Method Code:
8.a. Baseline Actual Emissions (if required):Estimated actual emissions are based on 6 months of operation and are also presented in ATT D for all pollutants emitted by proposed equipment. tons/year	8.b. Baseline 24-month Period: From: To:
9.a. Projected Actual Emissions (if required): tons/year	9.b. Projected Monitoring Period: [ ] 5 years [ ] 10 years

10. Calculation of Emissions:

See ATT D.

For PTE:
Gas input = 2,000 cf/hr per boiler x 3 boilers = 6000 cf/hr total natural gas throughput
Total Annual hours = 8760 (full year)
Equation = (lbs per hour of pollutant) x (total annual hours of operation) /2,000 lb/ton

For Actual Emission Estimate:
Gas input = 2,000 cf/hr per boiler x 3 boilers = 6000 cf/hr total natural gas throughput
Total Annual hours = 4380 (6 months – (Oct 15 to April 15)
Equation = (lbs per hour of pollutant) x (total annual hours of operation) /2,000 lb/ton

11. Potential, Fugitive, and Actual Emissions Comment:

F2. EMISSIONS UNIT POLLUTANT DETAIL INFORMATION - ALLOWABLE EMISSIONS

Complete Subsection F2 if the pollutant identified in Subsection F1 is or would be subject to a numerical emissions limitation.

Allowable Emissions Allowable Emissions __ of __

1. Basis for Allowable Emissions Code: **See existing FESOP Requirements**	2. Future Effective Date of Allowable Emissions: October 2011
3. Allowable Emissions and Units: **See existing FESOP for details and list of emission units**	4. Equivalent Allowable Emissions: lb/hour tons/year
5. Method of Compliance: Annual Fuel Usage and Emission Tracking with verification of emission estimates from Test Fire reports from Manufacturer to be provided upon delivery of equipment.	
6. Allowable Emissions Comment (Description of Operating Method):	

Allowable Emissions Allowable Emissions __ of __

1. Basis for Allowable Emissions Code:	2. Future Effective Date of Allowable Emissions:
3. Allowable Emissions and Units:	4. Equivalent Allowable Emissions: lb/hour tons/year
5. Method of Compliance:	
6. Allowable Emissions Comment (Description of Operating Method):	

Allowable Emissions Allowable Emissions __ of __

1. Basis for Allowable Emissions Code:	2. Future Effective Date of Allowable Emissions:
3. Allowable Emissions and Units:	4. Equivalent Allowable Emissions: lb/hour tons/year
5. Method of Compliance:	
6. Allowable Emissions Comment (Description of Operating Method):	

G. VISIBLE EMISSIONS INFORMATION

Complete Subsection G if this emissions unit is or would be subject to a unit-specific visible emissions limitation.

Visible Emissions Limitation: Visible Emissions Limitation __ of ____

1. Visible Emissions Subtype: N/A	2. Basis for Allowable Opacity: ☐ Rule ☐ Other
3. Allowable Opacity: Normal Conditions: % Exceptional Conditions: % Maximum Period of Excess Opacity Allowed: min/hour	
4. Method of Compliance: Remaining under FESOP emission limits by demonstrating Potential to Emit (PTE) of the proposed 6-million BTU system is below the PTE emissions generated by the existing 5n-million BTU equipment in Building 315 that is to be replaced.	
5. Visible Emissions Comment:	

Visible Emissions Limitation: Visible Emissions Limitation __ of ____

1. Visible Emissions Subtype: N/A	2. Basis for Allowable Opacity: ☐ Rule ☐ Other
3. Allowable Opacity: Normal Conditions: % Exceptional Conditions: % Maximum Period of Excess Opacity Allowed: min/hour	
4. Method of Compliance:	
5. Visible Emissions Comment:	

EMISSIONS UNIT INFORMATION
Section [ ] of [ ]

H. CONTINUOUS MONITOR INFORMATION

Complete Subsection H if this emissions unit is or would be subject to continuous monitoring. N/A

Continuous Monitoring System: Continuous Monitor ___ of ___

1. Parameter Code: N/A	2. Pollutant(s):
3. CMS Requirement:	☐ Rule ☐ Other
4. Monitor Information... Manufacturer: Model Number:	Serial Number:
5. Installation Date:	6. Performance Specification Test Date:
7. Continuous Monitor Comment:	

Continuous Monitoring System: Continuous Monitor ___ of ___

1. Parameter Code:	2. Pollutant(s):
3. CMS Requirement:	☐ Rule ☐ Other
4. Monitor Information... Manufacturer: Model Number:	Serial Number:
5. Installation Date:	6. Performance Specification Test Date:
7. Continuous Monitor Comment:	

H. CONTINUOUS MONITOR INFORMATION (CONTINUED)

Continuous Monitoring System: Continuous Monitor ___ of ___

1. Parameter Code:	2. Pollutant(s):
3. CMS Requirement:	☐ Rule ☐ Other
4. Monitor Information... Manufacturer: Model Number:	Serial Number:
5. Installation Date:	6. Performance Specification Test Date:
7. Continuous Monitor Comment:	

Continuous Monitoring System: Continuous Monitor ___ of ___

1. Parameter Code:	2. Pollutant(s):
3. CMS Requirement:	☐ Rule ☐ Other
4. Monitor Information... Manufacturer: Model Number:	Serial Number:
5. Installation Date:	6. Performance Specification Test Date:
7. Continuous Monitor Comment:	

EMISSIONS UNIT INFORMATION
Section [ ] of [ ]

I. EMISSIONS UNIT ADDITIONAL INFORMATION

Additional Requirements for All Applications, Except as Otherwise Stated

1. Process Flow Diagram: (Required for all permit applications, except Title V air operation permit revision applications if this information was submitted to the department within the previous five years and would not be altered as a result of the revision being sought)
   [X] Attached, Document ID: ATT B [ ] Previously Submitted, Date _____

2. Fuel Analysis or Specification: (Required for all permit applications, except Title V air operation permit revision applications if this information was submitted to the department within the previous five years and would not be altered as a result of the revision being sought)
   [ ] Attached, Document ID: _____ [X] Previously Submitted, Date **FESOP**

3. Detailed Description of Control Equipment: (Required for all permit applications, except Title V air operation permit revision applications if this information was submitted to the department within the previous five years and would not be altered as a result of the revision being sought)
   [ ] Attached, Document ID: Not App [ ] Previously Submitted, Date _____

4. Procedures for Startup and Shutdown: (Required for all operation permit applications, except Title V air operation permit revision applications if this information was submitted to the department within the previous five years and would not be altered as a result of the revision being sought)
   [X] Attached, Document ID: _____ [ ] Previously Submitted, Date _____
   [ ] Not Applicable (construction application)

5. Operation and Maintenance Plan: (Required for all permit applications, except Title V air operation permit revision applications if this information was submitted to the department within the previous five years and would not be altered as a result of the revision being sought)
   [X] Attached, Document ID: **ATT C** [ ] Previously Submitted, Date _____
   [ ] Not Applicable

6. Compliance Demonstration Reports/Records:
   [ ] Attached, Document ID: _____
   Test Date(s)/Pollutant(s) Tested: _____
   [ ] Previously Submitted, Date: _____
   Test Date(s)/Pollutant(s) Tested: _____
   [X] To be Submitted, Date (if known): Not known
   Test Date(s)/Pollutant(s) Tested: Test Fire Reports from manufacturer upon delivery
   [ ] Not Applicable

   Note: For FESOP applications, all required compliance demonstration records/reports must be submitted at the time of application. For Title V air operation permit applications, all required compliance demonstration reports/records must be submitted at the time of application, or a compliance plan must be submitted at the time of application.

7. Other Information Required by Rule or Statute:
☐ Attached, Document ID: _____ ☐ Not Applicable

I. EMISSIONS UNIT ADDITIONAL INFORMATION (CONTINUED)

Additional Requirements for Air Construction Permit Applications

1. Control Technology Review and Analysis (Rules 62-212.400(10) and 62-212.500(7), F.A.C.; 40 CFR 63.43(d) and (e)):	☐ Attached, Document ID: _____ ☒ Not Applicable
2. Good Engineering Practice Stack Height Analysis (Rules 62-212.400(4)(d) and 62-212.500(4)(f), F.A.C.):	☐ Attached, Document ID: _____ ☒ Not Applicable
3. Description of Stack Sampling Facilities: (Required for proposed new stack sampling facilities only)	☐ Attached, Document ID: _____ ☒ Not Applicable

Additional Requirements for Title V Air Operation Permit Applications

1. Identification of Applicable Requirements:	☐ Attached, Document ID: _____
2. Compliance Assurance Monitoring:	☐ Attached, Document ID: _____ ☐ Not Applicable
3. Alternative Methods of Operation:	☐ Attached, Document ID: _____ ☐ Not Applicable
4. Alternative Modes of Operation (Emissions Trading):	☐ Attached, Document ID: _____ ☐ Not Applicable

Additional Requirements Comment

ATT. A

REPAIR VENTILATION
BUILDING 315 PAINT BARN

BASE PROJECT NUMBER XLWU98-1063
325 CONS/LGCCA
TYNDALL AFB, FLORIDA

100% DESIGN SUBMISSION
JUNE 15, 2011

LEGEND

BUILDING MATERIALS

- EARTH
- CRUSHED STONE
- CONCRETE
- STEEL
- PLYWOOD
- PLASTER OR LATH

DRAWING CONVENTIONS

SHEET NUMBERING

A101 — SHEET NUMBER; DISCIPLINE DESIGNATION

- G GENERAL
- M MECHANICAL
- E ELECTRICAL

ELEVATION — E3

DETAILS OR SECTION — E3 / A1-M202 — DETAIL NUMBER; SHEET WHERE DETAIL IS DRAWN; SHEET OR SHEETS WHERE DETAIL APPLIES

DRAWING REVISION — LIMIT OF REVISION; REVISION NUMBER

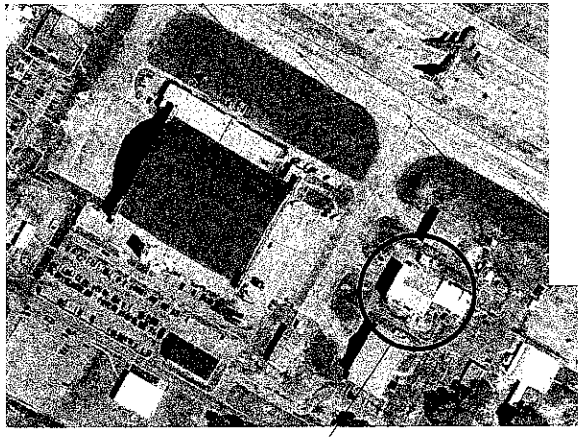

VICINITY MAP

DRAWING INDEX

GENERAL
- T1 TITLE PAGE

MECHANICAL
- M-1 MECHANICAL COVER SHEET
- M-2 DEMOLITION MECHANICAL
- M-3 MECHANICAL FLOOR PLAN (NEW WORK)
- M-4 SCHEDULE AND DETAIL

ELECTRICAL
- E-1 DATA SHEET - ELECTRICAL
- E-2 DEMOLITION ELECTRICAL
- E-3 FLOOR PLAN (POWER) - ELECTRICAL
- E-4 SCHEDULE AND DETAIL

CAPE
8851 Oak Hall Lane
Suite 200
Columbia, MD 21045
410-290-1994

DAVIS BOWEN & FRIEDEL, INC.
ARCHITECTS, ENGINEERS & SURVEYORS
SALISBURY, MARYLAND • MILFORD, DELAWARE
410.543.9091 302.424.1441

Allen & Shariff CORPORATION
7084 Deepage Drive
Columbia, MD 21045
p 410-381-7160
f 410-381-7110

Allen & Shariff CORPORATION — DAVIS BOWEN & FRIEDEL, INC.

Date	Description	Dwn	Chkd

CAPE — 8851 Oak Hall Lane, Suite 200, Columbia, MD 21045, 443-276-1994

Designed by | Dwn by | Chk by | Reviewed by | Submitted by | Date 06/06/11 | Dwg file no. | Drawing coord. | No. revised Plot Date | Dwg scale

DEPARTMENT OF THE AIR FORCE
AFCEE/CONS/LGCCA
TYNDALL AFB, FL

BASE PROJECT NUMBER: XLWU98-1063
REPAIR VENTILATION, BLDG 315 PAINT BARN
TYNDALL AFB, FL
100% DESIGN SUBMISSION

DRAWING TITLE: TITLE PAGE

Sheet Reference Number: T1

Sheet 1 of 9

GENERAL NOTES:

1. ALL WORK AND EQUIPMENT SHALL COMPLY WITH ALL APPLICABLE LAWS, CODES, ETC., OF ALL AUTHORITIES HAVING JURISDICTION, INCLUDING BUT NOT LIMITED TO: THE INTERNATIONAL MECHANICAL PLUMBING CODE, THE LOCAL FIRE MARSHAL, UNDERWRITERS LABORATORY (UL), R. PM, OSHA, AND THE NATIONAL ELECTRICAL CODE (NEC).

2. ALL SPECIFICATIONS AND DRAWINGS, I.E., MECHANICAL/PLUMBING, AND ELECTRICAL ARE COMPLIMENTARY AND MUST BE USED IN COMBINATION TO OBTAIN COMPLETE CONSTRUCTION INFORMATION. ANY INFORMATION CONFLICTS WITHIN THE SPECIFICATIONS AND DRAWINGS SHALL BE BROUGHT TO THE ENGINEERS ATTENTION.

3. CONTRACTOR SHALL VERIFY ALL POINTS OF CONNECTION BEFORE COMMENCING WORK. CONTRACTOR SHALL COORDINATE WORK WITH EXISTING WORK AND OTHER TRADES. CONTRACTOR SHALL REMOVE ALL WASTE MATERIALS, DEBRIS, AND RUBBISH FROM SITE AND LEGALLY DISPOSE OF IT. ALL UNUSED EQUIPMENT BEFORE THE AREA SHALL BE REMOVED AND RETURNED TO THE OWNER.

4. EXISTING EQUIPMENT TO REMAIN, BE REUSED, OR RELOCATED WITHIN OR SERVING THE SPACE, WHICH IS DAMAGED OR DOES NOT COMPLY WITH THE SPECIFICATIONS, SHALL BE RESTORED TO LIKE NEW CONDITION SUBJECT TO REVIEW BY THE GENERAL CONTRACTOR AND ENGINEER, OR SHALL BE REPLACED WITH NEW MATERIALS MEETING THE SPECIFICATION REQUIREMENTS.

5. CONTRACTOR SHALL COORDINATE, PREPARE AND SUBMIT EQUIPMENT SUBMITTAL TO THE GENERAL CONTRACTOR AND ENGINEER FOR THEIR APPROVAL.

6. A SET OF RECORD COORDINATION DRAWINGS SHALL BE MAINTAINED IN THE GENERAL CONTRACTORS OFFICE AT THE JOB SITE. ACTUAL LOCATIONS OF ALL EQUIPMENT, PIPING, DUCTWORK, ETC., AND ALL DEVIATIONS OF THE WORK FROM THAT SHOWN ON THE CONTRACT DOCUMENTS SHALL BE MARKED ON THE RECORD COORDINATION DRAWINGS. EACH TRADE SHALL REVIEW THE COORDINATION DRAWINGS AND RESOLVE ANY POTENTIAL CONFLICTS WITH OTHER TRADES PRIOR TO INSTALLING ANY PORTION OF THEIR WORK. CONTRACTOR SHALL NOT CORE, SAW, OR CUT CONCRETE SLABS FOR ANY REASON WITHOUT THE KNOWLEDGE AND WRITTEN CONSENT OF THE GENERAL CONTRACTOR AND THE CONTRACTING OFFICER.

7. WORK SHALL BE EXECUTED IN A GOOD WORKMANLIKE MANNER USING MECHANICS SKILLED IN THEIR RESPECTIVE TRADES. THE CONTRACTOR IS SOLELY RESPONSIBLE FOR ALL CONSTRUCTION MEANS, METHODS, SEQUENCES, AND PROCEDURES FOR COORDINATING THE WORK UNDER THIS CONTRACT. MAINTAIN THE CONSTRUCTION PREMISES IN A NEAT AND ORDERLY CONDITION AT THE END OF EACH WORKING DAY.

8. THE GENERAL CONTRACTOR SHALL BRING TO THE ATTENTION OF THE MECHANICAL CONTRACTOR ANY BLASTPROOF PARTITIONS IN ORDER TO PRESERVE RETURN AIR PATHWAYS. ALL PENETRATIONS OF BLASTPROOF PARTITIONS SHALL BE SEALED AIRTIGHT. CONTRACTOR SHALL VERIFY PARTITION RATING AND PROVIDE FIRE DAMPER AND OR SMOKE DAMPERS AS REQUIRED AS PART OF BASE BID. PROVIDE ACCESS DOORS AS REQUIRED TO MAINTAIN ACCESSIBILITY. CERTAIN TYPE DAMPERS SHALL BE IN THE AIRFLOW OUT OF THE AIR STREAM.

9. WHEREVER FIRE RATED PARTITIONS ARE PENETRATED FOR WIRE, DUCT, OR PIPE PASSAGE, SEAL PASSAGES WITH CODE APPROVED, LABORATORY TESTED AND LABELED SEALANT OF FIRE RESISTANCE RATING NOT LESS THAN THAT OF PENETRATED ASSEMBLY THAT WILL PREVENT PASSAGE OF FIRE AND SMOKE.

10. PIPING OR EQUIPMENT SHALL NOT BE SUPPORTED FROM STRUCTURAL MEMBERS WITHOUT PRIOR REVIEW AND APPROVAL FROM THE OWNER.

11. ALL NEW RECTANGULAR DUCTWORK SHALL BE CONSTRUCTED OF LOCK FORMING GALVANIZED STEEL IN ACCORDANCE WITH THE LATEST EDITION OF THE "DUCT MANUAL AND SHEET METAL CONSTRUCTION FOR VENTILATING AND AIR CONDITIONING SYSTEMS", PUBLISHED BY THE SHEET METAL AND AIR CONDITIONING CONTRACTORS NATIONAL ASSOCIATION INC. (SMACNA). ALL DUCTWORK SHALL BE SEALED USING HARDCAST TAPE AND ACHIEVE (3 PAST THERMO). CONTRACTOR SHALL USE APPROPRIATE SYSTEM FOR OUTDOOR OR INDOOR APPLICATION. FOIL STAP MAY BE USED AS AN ALTERNATE FOR SEALING INDOOR DUCTWORK. ALL DUCT, REGARDLESS OF PRESSURE CLASS, SHALL BE SEALED PER SMACNA CLASS "A" SEALING RATES.

12. ALL BACKFLOW PREVENTER ASSEMBLIES SHALL BE INSTALLED IN AN ACCESSIBLE LOCATION. PIPE RELIEF OUTLET, IF APPLICABLE, TO NEAREST FLOOR DRAIN. DO NOT INSTALL ABOVE FINISHED GROUND UNLESS NOTED OR INDICATED OTHERWISE.

13. ALL NECESSARY EQUIPMENT SHALL BE PROVIDED ON ALL PIPING UNIONS, VALVES, VACUUM BREAKERS, STRAINERS, ETC. AS REQUIRED TO CONNECT EQUIPMENT AT LOCATION SHOWN, AND TO MAKE FULLY OPERABLE IN ACCORDANCE WITH ALL LOCAL CODES AND REGULATIONS.

14. THE CONTRACTOR SHALL VERIFY ALL VOLTAGE AND POWER REQUIREMENTS FOR ALL EQUIPMENT AND COORDINATE WITH THE CONTRACT DRAWINGS PRIOR TO ISSUANCE OF SHOP DRAWINGS AND PURCHASE OF EQUIPMENT.

15. INSTALLATION OF ALL EQUIPMENT AND THEIR ACCESSORIES SHALL BE PER MANUFACTURERS PUBLISHED RECOMMENDATIONS.

16. ALL AUTOMATIC TEMPERATURE CONTROL SYSTEM WORK, MODIFICATION AND INSPECTION SHALL BE ACCOMPLISHED BY THE CONTRACTOR. ALL DAMAGED, DEFECTIVE, MISSING, OR INAPPROPRIATE DEVICES SHALL BE REPAIRED OR REPLACED AS REQUIRED. THERMOSTATS SHALL BE INSTALLED AS SHOWN ON THE DRAWINGS UNDER THIS CONTRACT. STANDARD MOUNTING HEIGHT TO TOP OF THERMOSTATS 48" ABOVE FINISHED FLOOR UNLESS INDICATED ON THE DRAWINGS.

17. CONTRACTOR SHALL MAKE ALL FINAL EQUIPMENT CONNECTIONS AND PROVIDE THE NECESSARY ADAPTORS, FITTINGS, VALVES, DEVICES, ETC. FOR A COMPLETE AND OPERABLE SYSTEM. COORDINATE REQUIREMENT FOR PROVISION OF MOTOR STARTERS, DISCONNECTS, CONTACTORS, CONTROL WIRING, ETC. AS REQUIRED FOR PROPER FUNCTIONING SYSTEM.

18. CONNECTIONS BETWEEN DISSIMILAR PIPING MATERIALS SHALL BE MADE WITH SUITABLE DIELECTRIC BRASS FITTINGS. ISOLATE COPPER PIPING FROM DISSIMILAR METALS, SUCH AS FERRUS METAL STEEL AND VENT PIPING.

19. PROVIDE VALVES AND UNIONS WHERE NEEDED TO PERMIT DISCONNECTIONS OF EACH PIECE OF EQUIPMENT FOR REPAIRS.

20. HVAC WATER PIPING AND INSULATION PER UFC. ALL CONDENSATE DRAINS SHALL BE TRAPPED TO A DEPTH EQUAL TO 1.5 TIMES THE TOTAL STATIC PRESSURE OF THE SYSTEM.

21. ALL PRODUCTS LOCATED WITHIN PLENUM AREAS, INCLUDING BUT NOT LIMITED TO INSULATION AND ADHESIVE SYSTEMS, SHALL HAVE A COMPOSITE FIRE HAZARD RATING NOT TO EXCEED 25 FLAME SPREAD AND 50 SMOKE DEVELOPED AS DETERMINED BY THE APPLICABLE UL OR ASTM STANDARD.

22. SUPPORT ALL PIPING FROM STRUCTURE WITH UL LISTED HANGERS AND SUPPORTS SUITABLE FOR THE INTENDED INSTALLATION, DESIGN, SELECTION, SPACING, AND APPLICATION OF HANGERS AND SUPPORTS SHALL COMPLY WITH ANSI B31 AND MSS SP69.

23. HYDRONIC SYSTEMS SHALL BE PRESSURE TESTED AND THOROUGHLY CLEANED WITH LOW FOAMING DETERGENT CLEANSER, PRIOR TO ANY BALANCING OR CHEMICAL TREATMENT.

24. ALL PIPING SYSTEMS, VALVES, DAMPERS AND EQUIPMENT SHALL BE PROPERLY IDENTIFIED. ALL DAMPERS AND VALVES SHALL HAVE THEIR NORMAL OPERATING POSITION IDENTIFIED, SUCH AS "NORMALLY OPEN" OR "NORMALLY CLOSED".

25. ALL SPECIFIED EQUIPMENT SHALL BE INDEPENDENTLY THIRD PARTY LABELED AS A SYSTEM FOR ITS INTENDED USE BY A NATIONALLY RECOGNIZED TESTING LABORATORY (NRTL) IN ACCORDANCE WITH OSHA FEDERAL REGULATIONS 29CFR1910.399 AND 1910, AS WELL AS NFPA PAMPHLET NO. 70, AND THE NATIONAL ELECTRICAL CODE (NEC), ARTICLE 90.2.

26. PROVIDE MERV 8 FILTERS FOR NEW SUPPLY AIR HANDLERS (3).

MECHANICAL SYMBOLS AND ABBREVIATIONS

- COLD WATER PIPE, NON-POTABLE
- G — GAS LINE PIPE
- PIPE UP
- PIPE DN
- E- PIPE CAP OR PLUG
- UNION
- FLANGED PIPE CONNECTION
- FLOW DIRECTION ARROW
- 5/M-3 — DETAIL OR DIAGRAM NO. 5 SHOWN ON DRAWING M-3
- 10/M-3 — SECTION NO. 10 FROM DRAWING M-3 SHOWN ON DRAWING M-3 (FOLLOW DENOTED SECTION)
- DISCONNECT
- CONNECT TO EXISTING
- EXISTING TO BE REMOVED
- (E) EXISTING

ABV	ABOVE
AFF	ABOVE FINISHED FLOOR
AHU	AIR HANDLING UNIT
ATC	AUTOMATIC TEMPERATURE CONTROL
B	BOILER
BD	BLOWDOWN
BLDG	BUILDING
BLN	BLOW
BOP	BOTTOM OF PIPE
C.F.H.	CUBIC FEET HOUR
CONN	CONNECT- CONNECTION
CONTN	CONTINUATION
CT	CHEMICAL TREATMENT
CW	DOMESTIC COLD WATER, POTABLE
DDC	DIRECT DIGITAL CONTROL
DISS	DISPOSER
DIA	DIAMETER
DWG	DRAWING
EQ	EQUAL
ET	EXPANSION TANK
EXR	EXISTING TO REMAIN
EX	EXISTING
ETD	EXISTING TO BE DEMOLISH
F	FAHRENHEIT
FPS	FEET PER SECOND
FT	FEET
FW	FEED WATER
G	GAS
GALV	GALVANIZED
GPM	GALLONS PER MINUTE
HP	HORSEPOWER
HWR	HOT WATER RETURN
HWS	HOT WATER SUPPLY
HWP	HOT WATER PUMP (PRIMARY)
IN	INCH, INCHES
L	LENGTH OR LONG
LB(S)	POUND(S)
LF	LINEAR FOOT (FEET)
L/D	LOUVER DOOR 1/2 SQ. FT.
MFR	MANUFACTURER
MAX	MAXIMUM
MBH	THOUSAND BTUS PER HOUR
MER	MECHANICAL EQUIPMENT ROOM
MH	MANHOLE(S)
MIN	MINIMUM
MTD	MOUNTED
NC	NORMALLY CLOSED
NIC	NOT IN CONTRACT
NO	NORMALLY OPEN
OA	OUTSIDE AIR
OAI	OUTSIDE AIR INTAKE
OC	ON CENTER
OD	OUTSIDE DIAMETER
RC	STEAM CONDENSATE RETURN (PUMPED)
PSI	POUNDS PER SQUARE INCH
PSIG	POUNDS PER SQUARE INCH GAUGE
PVC	POLYVINYL CHLORIDE
RX	REMOVE EXISTING
SHWP	SECONDARY HOT WATER PUMP (SYSTEM SIDE)
TD	TEMPERATURE DIFFERENCE
TYP	TYPICAL
UON	UNLESS OTHERWISE NOTED
VP	VENT PIPE
W/	WITH
W/O	WITHOUT
UH	UNIT HEATER

Allen & Shariff
ALLEN & SHARIFF CORPORATION, INC.
6851 Oak Hall Lane
Suite 200
Columbia, MD 21045
443-276-1904

Rev.	Description	Appr.	Date

Designed by: | Date: 06/15/11 | Rev.
Dwn by: | Ckd by: | Design No.
Reviewed by: | Drawing date
Submitted by: | Dwg. scale: | Dwg. size: | File Name: | Plot Date:

DEPARTMENT OF THE AIR FORCE
325 CONS/LGCA
TYNDALL AFB, FL

BASE PROJECT NUMBER: XLWU98-1003
RUPAIR VENTILATION, BLDG 315 PAINT BARN
TYNDALL AFB, FL
100% DESIGN SUBMISSION

DRAWING TITLE:
MECHANICAL COVER SHEET

Sheet Reference Number:
M-1

Sheet 2 of 9

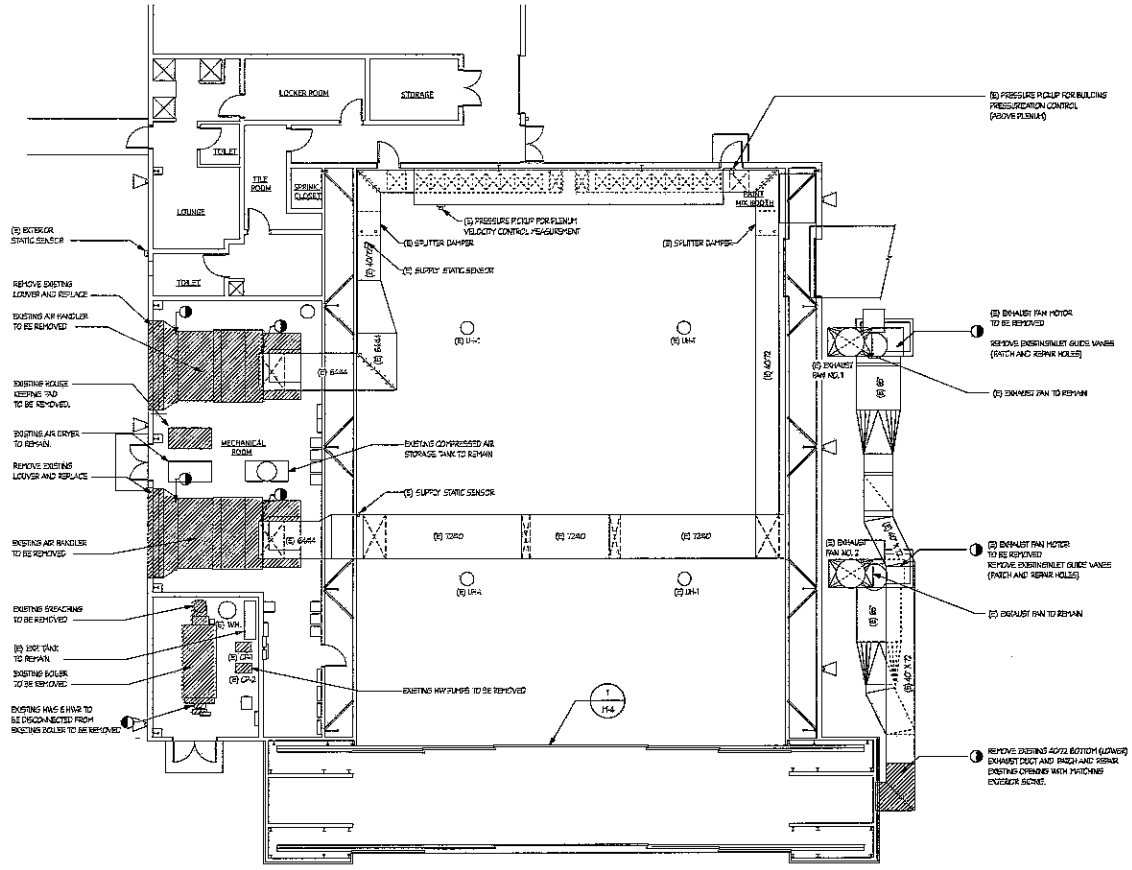

1 M-2 DEMOLITION MECHANICAL
SCALE: 1/8" = 1'-0"

NOTES:

1. ALL EXISTING HVAC ELEMENTS TO REMAIN UNLESS NOTED OR SHOWN OTHERWISE.

Allen & Shaeff
Architects Planners
DAVID A. SHAEFF, INC.

6851 Oak Hall Lane
Suite 200
Columbia, MD 21045
443-276-1994

Date: 06/15/11
Rev:
Design file no:
Drawing code:
Rev. error
Rev. Date:
Orig. Date:

Developed by:
Drawn by:
CIR by:
Reviewed by:
Submitted by:

DEPARTMENT OF THE AIR FORCE
AFCEC/CIC
TYNDALL AFB, FL

DASE PROJECT NUMBER: XLWU98-H063
REPAIR VENTILATION, BLDG 315 PAINT BARN
TYNDALL AFB, FL
100% DESIGN SUBMISSION

DRAWING TITLE:
DEMOLITION MECHANICAL

Sheet Reference Number:
M-2

Sheet 3 of 9

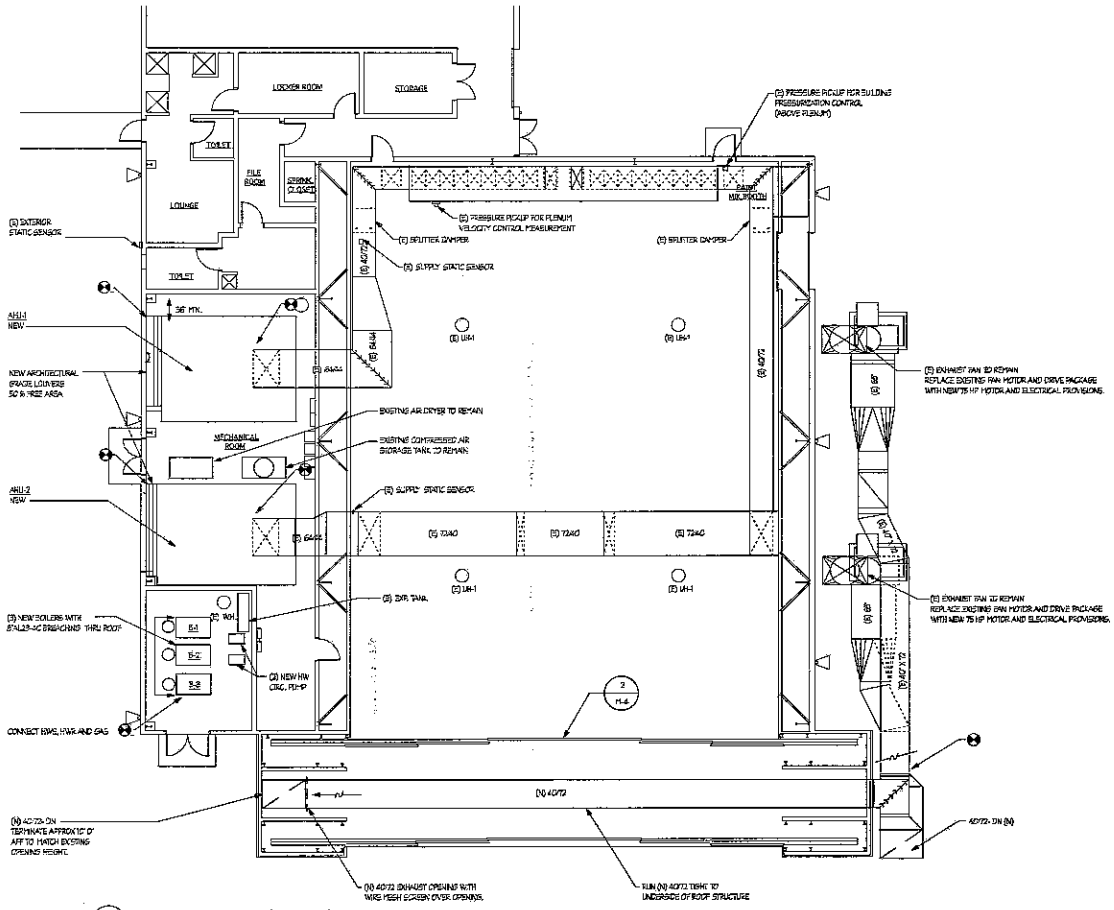

1 / M-3 MECHANICAL FLOOR PLAN (NEW WORK)
SCALE: 1/8" = 1'-0"

Allen & Shaeff
ARCHITECTS, P.A.
BOWER & PARTNERS, INC.
Mark | Description | Date

6951 Oak Hill Lane
Suite 200
Columbia, MD 21045
410-379-1184

Designed by: | Date: 06/15/11 | Item
Drawn by: | Chk by: | Design file no.
Reviewed by | Drawing code:
Submitted by | File name: | Plot Date: | Dwg Layer:

DEPARTMENT OF THE AIR FORCE
325 FW/CE
TYNDALL AFB, FL

BASE PROJECT NUMBER: XLWU08-1063
REPAIR VENTILATION, BLDG 315 PAINT BARN
TYNDALL AFB, FL
100% DESIGN SUBMISSION

DRAWING TITLE:
MECHANICAL FLOOR PLAN (NEW WORK)

Sheet Reference Number:
M-3
Sheet 4 of 9

CONTROL OPERATION

SUPPLY FANS AND EXHAUST FANS ARE STARTED MANUALLY.

SUPPLY PLENUM AIR FLOW MEASURED THRU PRESSURE PICK UP MOUNTED ON SUPPLY PLENUM TO CONTROLLER.

CONTROLLER MAINTAINS SET POINT OF MANUAL GRADUAL SWITCH (50-200 FEET PER MINUTE) BY MODULATING VFD ON SUPPLY FANS.

EXHAUST AIR FLOW MEASURED THRU PRESSURE PICK UP MOUNTED ON BUILDING OUTSIDE WALL, TRANSMITS SIGNAL OUTPUT TO CONTROLLER.

CONTROLLER MAINTAINS SET OF MANUAL GRADUAL SWITCH (NEGATIVE TO POSITIVE) BY REGULATING INLET BLADE VANES ON EXHAUST FANS.

BUILDING PRESSURE TO BE MANUALLY SET TO PROVIDE NEUTRAL TO SMALL NEGATIVE PRESSURE OF INSIDE OF BUILDING.

OUTPUT GAUGES, READING 0-200 FPM AND NEG-POS AND MANUAL GRADUAL SWITCHES TO BE MOUNTED IN CONTROL CABINET LOCATED PER DRAWINGS.

EXISTING EXHAUST FAN SCHEDULE

FAN NO.	AIR FLOW CFM	TOTAL STATIC PRESSURE IN. WG	MOTOR (NEW)	FAN RPM (MAX)
1	72,000	4.0	75	709
2	72,000	4.0	75	709

NOTES:
PROVIDE NEW 75 HP MOTOR AND DRIVE PACKAGE TO INCLUDE VFD.

CENTRAL STATION, NEW AIR HANDLER

UNIT NO.	AIR FLOW CFM	TOTAL STATIC PRESSURE IN. WG.	MOTOR HP	BASIS OF DESIGN	HEATING CAPACITY	WATER TEMPERATURE
1	70,000	2.2	60	MC QUAY CAH MERIAC	250 MBH	180° F
2	70,000	2.35	60	MC QUAY CAH MERIAC	250 MBH	180° F

NOTES:
- AIR FOIL FANS WITH VFD SUPPLIED BY AIR HANDLER MANUFACTURER.
- FAN SECTION MUST BE MODULAR, CAPABLE OF PARTIAL DISASSEMBLY TO ENABLE ERECTION IN CONFINED SPACE AS SHOWN.
- FAN AND MOTOR TO BE INTERNALLY SPRING ISOLATED.
- FINAL FAN SECTION DIMENSIONS S-ALL ALLOW 30" CLEAR BETWEEN FRONT OF SECTION AND WALL.
- PROVIDE FILTRATION MEDIA UPSTREAM OF THE HEATING COIL.

BOILER SCHEDULE

DESIGNATION	DESCRIPTION	BASIS OF DESIGN	BTU INPUT	WATER TEMPERATURE
B-1	BOILER 1	FULTON FLM-2000	2,000 MBH	180°F
B-2	BOILER 2	FULTON FLM-2000	2,000 MBH	180°F
B-3	BOILER 3	FULTON FLM-2000	2,000 MBH	180°F

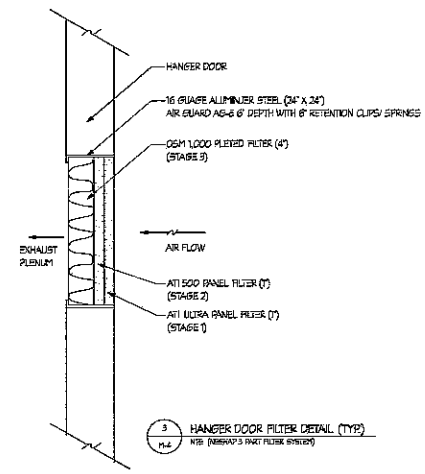

3 / M-4 HANGER DOOR FILTER DETAIL (TYP.)
NTS (NESHAP'S PART FILTER SYSTEM)

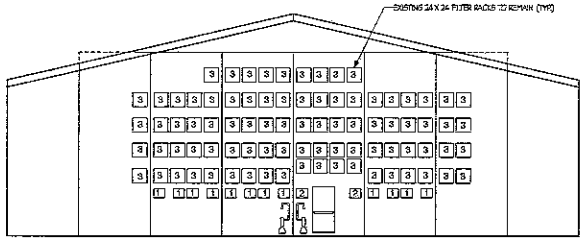

1 / M-4 EXISTING HANGAR DOOR ELEVATION (DEMOLITION)
SCALE: 1/8" = 1'-0"

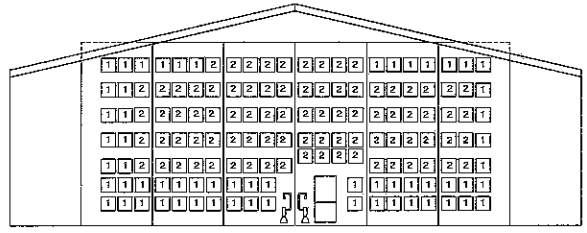

2 / M-4 HANGAR DOOR ELEVATION (NEW WORK)
SCALE: 1/8" = 1'-0"

NOTES:

1. EXISTING 20" X 16" FILTER FRAMES TO BE DEMOLISHED.

2. EXISTING 20" X 16" FILTERS TO BE DEMOLISHED, COVER OPENING WITH SHEET METAL OF GUAGE TO MATCH EXISTING DOOR SKIN.

3. EXISTING 24" X 24" FILTER, REMOVE FILTER MEDIA.

NOTES:

1. NEW 24" X 24" FILTER OPENING AND FILTER ASSEMBLY (TYP. OF 85), PROVIDE NESHAP'S PART FILTER SYSTEM CONSISTING OF AFI "ULTRA" PANEL FILTER (STAGE 1), AFI "500 1" PANEL FILTER (STAGE 2) AND OSM-1000 3" PANEL FILTER (STAGE 3), PROVIDE NEW 24" X 24" AIRGUARD AG-6 FILTER FRAME WITH 5" RETENTION CLIPS.

2. FROM THE NEW 24" X 24" FILTER ASSEMBLY, PROVIDE NESHAP'S PART FILTER SYSTEM CONSISTING OF AFI "ULTRA" PANEL FILTER (STAGE 1), AFI "500 1" PANEL FILTER (STAGE 2) AND OSM-1000 3" PANEL FILTER (STAGE 3), PROVIDE NEW 24" X 24" AIRGUARD AG-6 FILTER FRAME WITH 6" RETENTION CLIPS IN EXISTING 24" X 24" FILTER OPENING (TYP. OF 85).

Allen & Shariff
Consulting Engineers, P.C.
DAVIS, BOWER & FRIEDEL, INC.
6851 Oak Hall Lane
Suite 200
Columbia, MD 21045
443-367-1914

Mark	Description	Date	Rev

Designed by: | Date by: | Checked by: | Submitted by:
Date: 06/18/11 | Check Mark: | Drawing number | Revision File Date: Drawing Scale:

DEPARTMENT OF THE AIR FORCE
AFCEC/CONWS
TYNDALL AFB, FL

BASE PROJECT NUMBER: XLWU98-1003
REPAIR VENTILATION, BLDG 315 PAINT BARN
TYNDALL AFB, FL
100% DESIGN SUBMISSION

DRAWING TITLE:
SCHEDULE AND DETAIL

Sheet Reference Number: M-4

Sheet 5 of 9

ELECTRICAL - GENERAL NOTES

1. THE ELECTRICAL CONTRACTOR SHALL PROVIDE ALL LABOR AND MATERIAL, STORAGE, UNPACKING AND PLACEMENT TO INCLUDE, BUT NOT LIMITED TO THE FOLLOWING ITEMS:

2. EXISTING POWER INTERRUPTION SHALL BE COORDINATED AND APPROVED BY BUILDING MANAGEMENT.

3. WORK AND EQUIPMENT SHALL COMPLY WITH THE LATEST AND APPLICABLE ADOPTED NATIONAL BUILDING CODES (INTERNATIONAL BUILDING CODE (IBC), NATIONAL ELECTRIC CODE (NEC), NATIONAL FIRE PROTECTION ASSOCIATION (NFPA) AND ALL LOCAL AMENDMENTS TO THE NATIONAL CODES, AS WELL AS ALL AUTHORITIES HAVING JURISDICTION. THE ESTABLISHED NATIONAL STANDARDS SHALL BEAR THEIR LABEL ON ALL NEW EQUIPMENT (UNDERWRITERS LABORATORIES(UL), FACTORY MUTUAL-FM AND ALL WORK SHALL BE IN COMPLIANCE WITH THE OCCUPATIONAL AND SAFETY ADMINISTRATION (OSHA). MODIFICATIONS REQUIRED BY THE ABOVE SAID AUTHORITIES TO BRING THE PROJECT SINCE UNDER CONTRACT UP TO CODE SHALL BE MADE WITHOUT ADDITIONAL CHARGE. WHERE CONTRACT DOCUMENT REQUIREMENTS ARE IN EXCESS OF CODE REQUIREMENTS, THE CONTRACT DOCUMENTS SHALL GOVERN. DEVIATIONS FROM THE CONTRACT DOCUMENTS REQUIRED BY THE ABOVE AUTHORITIES SHALL BE SUBMITTED TO THE CONTRACTING OFFICER FOR REVIEW.

4. ELECTRICAL DOCUMENTS ARE DIAGRAMMATIC AND INDICATE MAJOR COMPONENTS. GENERAL LOCATION OF WORK AND SYSTEMS. COORDINATE ALL TRADES AND BE FAMILIAR WITH CONDITIONS, NEW AND EXISTING, WHICH MAY AFFECT THE WORK. VERIFY AND FIELD CHECK DIMENSIONS AND CONDITIONS PRIOR TO THE START OF ANY WORK AND REVIEW THE DOCUMENTS FOR ANY CONDITIONS WHICH AFFECT THE WORK. EQUIPMENT LOCATIONS INDICATED ARE APPROXIMATE AND SHALL BE FIELD VERIFIED. THE CONTRACTOR SHALL REVIEW ALL SUPPORTING AND COMPLIMENTARY DOCUMENTS, WHICH ARE CONSIDERED A PART OF THE CONTRACT DOCUMENT PACKAGE. THESE DOCUMENTS INCLUDE: ARCHITECTURAL, STRUCTURAL, MECHANICAL, PLUMBING AND ELECTRICAL DOCUMENTS AND SPECIFICATIONS. THESE DOCUMENTS COMPLIMENT EACH OTHER AND MUST BE UTILIZED BY ALL CONTRACTORS IN ORDER TO OBTAIN COMPLETE CONSTRUCTION INFORMATION. ANY INFORMATION, WHICH CONFLICTS WITHIN THESE DOCUMENTS AND SPECIFICATIONS, SHALL BE BROUGHT TO THE ARCHITECTS AND ENGINEERS ATTENTION.

5. ALL MATERIALS SHALL BE NEW, FREE FROM DEFECTS AND LISTED BY THE UNDERWRITERS LABORATORIES, INC (UL) BEFORE PROCURING MATERIALS OR EQUIPMENT. SUBMIT ENGINEERING DATA FOR MATERIAL AND EQUIPMENT PROPOSED FOR USE. VERIFY EQUIPMENT DIMENSIONS FOR ADEQUATE SPACE ALLOTMENT ON THE PROJECT. THE PRODUCT MANUFACTURERS AND COMPONENT MODEL NUMBERS ARE GIVEN TO ESTABLISH A LEVEL OF QUALITY AND PERFORMANCE, AND ARE NOT INTENDED TO EXCLUDE EQUIVALENT PRODUCTS OF ALTERNATE MANUFACTURERS. ALTERNATE MANUFACTURERS OF EQUIVALENT PRODUCTS WILL BE CONSIDERED. COORDINATE, PREPARE AND SUBMIT SHOP DRAWINGS TO THE CONTRACTING OFFICER FOR REVIEW AND APPROVAL.

6. MAINTAIN A SET OF MSP RECORD DRAWINGS IN THE GENERAL CONTRACTORS OFFICE, AT THE PROJECT SITE OFFICE. INDICATE ACTUAL LOCATIONS OF ALL EQUIPMENT, CONDUIT AND ETC., AS WELL AS DEVIATIONS OF WORK FROM THAT SHOWN ON THE CONTRACT DOCUMENTS. WHERE CONFLICTS EXIST BETWEEN EQUIPMENT OF MULTIPLE DISCIPLINES, THE CONTRACTOR SHALL DEVELOP FIELD COORDINATION DRAWINGS TO ASSIST IN THE INSTALLATION AS WELL AS A RECORD TO INDICATE THESE FAILURES TO THE CONTRACTING OFFICER.

7. INSTALL WORK IN A NEAT AND WORKMANLIKE MANNER. THE CONTRACTOR IS SOLELY RESPONSIBLE FOR CONSTRUCTION MEANS, METHODS, TECHNIQUES, SEQUENCES AND PROCEDURES FOR COORDINATING WORK UNDER THIS CONTRACT.

8. MAINTAIN THE CONSTRUCTION PREMISES IN A NEAT AND ORDERLY CONDITION AND CLEAN DEBRIS FROM THE SITE AT THE END OF EACH WORKING DAY.

9. IN SERVICE FIRE RATED PARTITIONS OR CONCRETE SLABS ARE PENETRATED BY FEEDER CONDUITS, BRANCH CIRCUIT CONDUIT, CABLINS AND CABLE TRAYS; THE PENETRATION SHALL BE SEALED WITH CODE APPROVED, LABORATORY TESTED AND LABELED SEALANT OF THE FIRE RESISTANCE RATING, WHICH IS NOT LESS THAN THAT OF THE PENETRATED ASSEMBLY.

10. PACKAGED EQUIPMENT SHALL BE INDEPENDENTLY THIRD PARTY LABELED AS A SYSTEM FOR ITS INTENDED USE BY A NATIONALLY RECOGNIZED TESTING LABORATORY (NRTL) IN ACCORD WITH THE OCCUPATIONAL SAFETY HEALTH ADMINISTRATION (OSHA) REGULATIONS, AS WELL AS NFPA TO THE NATIONAL ELECTRICAL CODES.

11. CONDUCTORS: ALL CONDUCTORS SHALL BE COPPER UNLESS NOTED OTHERWISE. ALL CONDUCTORS SHOWN ON THE DOCUMENTS SHALL BE RATED A MINIMUM OF 75 DEG C TYPE THW 600 VOLT INSULATION.

A. CONDUCTORS #10AWG AND SMALLER SHALL BE SOLID TYPE CONDUCTORS. CONDUCTORS #8AWG AND LARGER SHALL BE STRANDED TYPE.
B. MINIMUM CONDUCTOR SIZE TO BE #12AWG UNLESS NOTED OTHERWISE.
C. ALL CONDUCTORS MUST BE INSTALLED IN CONDUIT, UNLESS NOTED OTHERWISE.
D. ALL BRANCH CIRCUITS INSTALLED IN CONDUIT SHALL BE PROVIDED WITH A SEPARATE GREEN INSULATED GROUND CONDUCTOR.

12. CABLES: METAL CLAD CABLE (MC) WITH AN INSULATED GREEN GROUND CONDUCTOR SHALL BE USED IN ALL CONCEALED BRANCH WIRING APPLICATIONS UNLESS OTHERWISE NOTED. TYPE ARMOR CLAD CABLE (AC) OR BX CABLE IS NOT PERMITTED.

13. INSTALLATION OF CONDUIT AND CABLE:

A. CABLE AND CONDUIT SHALL BE INSTALLED CONCEALED IN FINISHED AREAS. BRANCH CIRCUITS INSTALLED IN UNFINISHED AREAS SHALL BE INSTALLED IN CONDUIT.
B. ALL EMPTY CONDUITS SHALL BE INSTALLED WITH PULL LINES.
C. CONDUITS INSTALLED INDOORS SHALL BE EMT.
D. CONDUITS SERVING MOTORS, TRANSFORMERS OR VIBRATING EQUIPMENT INSTALLED IN INDOOR DRY LOCATIONS SHALL BE FLEXIBLE METALLIC CONDUIT (FMC).
E. CONDUITS INSTALLED OUTDOORS OR EXPOSED TO DAMP OR MOIST ENVIRONMENTS SHALL BE INSTALLED IN PVC.
F. CONDUITS SERVING MOTORS, TRANSFORMERS OR VIBRATING EQUIPMENT INSTALLED IN OUTDOORS OR IN DAMP OR MOIST LOCATIONS SHALL BE LIQUIDTITE FLEXIBLE METAL CONDUIT FLEXIBLE METALLIC CONDUIT (LFMC).
G. ALL CONNECTORS FOR SOLID CONDUIT (EMT AND IMC) SHALL BE COMPRESSION TYPE FITTINGS. ALL CONNECTORS FOR FLEXIBLE CONDUITS AND CABLES SHALL BE UL LISTED FOR USE WITH THAT EQUIPMENT.
H. ALL CABLES AND CONDUIT SHALL BE INSTALLED PARALLEL AND PERPENDICULAR TO BUILDING LINES AND SHALL BE PROPERLY SUPPORTED AS RECOMMENDED BY THE NEC. THE ABOVE SHALL NOT BE SUPPORTED BY MECHANICAL REPAIR OR TIED TO DUCTWORK HANGERS. CABLES SHALL NOT BE SUPPORTED BY OTHER ELECTRICAL CONDUIT.
I. WHERE BRANCH CIRCUIT CABLES ENTERING AN ELECTRICAL CLOSET, THE CABLES SHALL NOT BE INSTALLED BUNDLED TOGETHER, RATHER THE CABLES SHALL BE COILED INTO THE ROOM, DISBURSED AND TRAINED INTO SINGLE AND DOUBLE ROWS, WHICH ARE NEARLY PARALLEL TO WINDOW BACK VIA THE PROPER TYPE OF CABLE PRESSURE CONNECTORS. THE CABLE SHALL BE SUPPORTED AND SMOOTHLY TRANSITIONED INTO THE INDICATED BRANCH CIRCUIT PANELBOARD.
J. COORDINATE ALL CONDUITS AND CABLE RUNS WITH MECHANICAL PIPING AND DUCTWORK TO AVOID CONFLICTS.
K. CONDUITS SHALL NOT BE USED AS EQUIPMENT GROUND RETURN PATHS. SEE 18. D. ABOVE

14. PROVIDE CUTTING AND PATCHING AS REQUIRED TO ACCOMPLISH THE ELECTRICAL WORK PORTRAYED ON THE DRAWINGS.

15. DISCONNECT SWITCHES: PROVIDE FUSED OR NON-FUSED HEAVY DUTY DISCONNECT SWITCHES SIZE AND RATING AS INDICATED ON THE DRAWINGS. ALL DISCONNECTS SHALL HAVE HANDLE LOCKING PROVISIONS IN THE ON AND OFF POSITIONS.

ELECTRICAL SYMBOLS

SYMBOL	DESCRIPTION
	DUPLEX RECEPTACLE, 20AMP, NEMA 5-20R (WHERE APPLICABLE IN APARTMENT UNITS, PROVIDE 15AMP RATED DEVICE, NEMA 5-15R). MOUNT 18" ABV UNO.
	DUPLEX RECEPTACLE, GROUND FAULT CIRCUIT INTERRUPTER TYPE (GFCI), 20AMP RATED. MOUNT 48" ABOVE COUNTER OR BACKSPLASH.
J	JUNCTION BOX
	BRANCH CIRCUIT (HOMERUN). NUMBER OF ARROWHEADS INDICATE NUMBER OF CIRCUITS. NUMBER OF SLASHES INDICATES NUMBER OF CONDUCTORS IF MORE THAN (2), (NOTE - 3/4" CONDUIT MINIMUM).
	BRANCH CIRCUIT CONCEALED IN CEILING OR WALL
	BRANCH CIRCUIT OR FEEDER INSTALLED IN CONCRETE SLAB OR INSTALLED BELOW GRADE.
	ELECTRICAL PANELBOARD, SURFACE OR RECESSED MOUNTED, 208Y/120V OR 480Y/277V.
T	DRY-TYPE TRANSFORMER ON NOMINAL 4" CONCRETE HOUSEKEEPING PAD.
	MOTOR CONNECTION
D F	DISCONNECT SWITCH, NFSS OR FSS.
$M	MANUAL MOTOR STARTER (TOGGLE SWITCH TYPE) WITH THERMAL OVERLOAD PROTECTION.
M	UTILITY OR SUB-METER SYMBOL.
	TRANSFORMER
	BREAKER
	VARIABLE FREQUENCY DRIVE

ELECTRICAL ABBREVIATIONS

%	PERCENT	MCB	MAIN CIRCUIT BREAKER
A	AMPS OR AMPERES	MLO	MAIN LUG ONLY
ADA	AMERICANS W/ DISABILITIES ACT COMPLIANCE	MOCP	MAXIMUM OVERCURRENT PROTECTION
		N	NEUTRAL
AFF	ABOVE FINISHED FLOOR	N/A	NOT APPLICABLE
AIC	AMPERES INTERRUPTING CAPACITY	NEC	NATIONAL ELECTRICAL CODE
AWG	AMERICAN WIRE GAUGE	NEMA	NATIONAL ELECTRICAL MANUFACTURERS ASSOC.
C	CONDUIT CONDUCTOR		
CT	CURRENT TRANSFORMER	NFPA	NATIONAL FIRE PROTECTION ASSOCIATION
DISC	DISCONNECT		
EF	EXHAUST FAN	NFSS	NON-FUSED SAFETY SWITCH
(E)	EXISTING	NO. #	NUMBER
FLA	FULL LOAD AMPS	P	PUMP, POLES
FT	FOOT OR FEET	PH. Ø	PHASE
GLSRD	GROUND	RLA	RUNNING LOAD AMPERES
GFI	GROUND FAULT CIRCUIT INTERRUPTER	RM	ROOM
HP	HORSEPOWER	S/N	SOLID NEUTRAL
J, JB	JUNCTION BOX	UG	UNDERGROUND
KAIC	THOUSAND AMPERES INTERRUPTING CAPACITY	UL	UNDERWRITERS LABORATORY
		UNO	UNLESS NOTED OTHERWISE
KCMIL	THOUSAND CIRCULAR MILS	V	VOLTS
KVA	KILOVOLT AMPERES	VA	VOLT AMPERE
KW	KILOWATT	W	WATT(S); WIRE
MAX	MAXIMUM	WP	WEATHERPROOF
MCA	MINIMUM CIRCUIT AMPACITY	XFMR	TRANSFORMER

Allen & Shaeff
ENGINEERS & ARCHITECTS, INC.
6851 Oak Hall Lane
Suite 200
Columbia, MD 21045
443-476-1994

Date	Description	Initial

Designed by: | Date: 06/15/11 | Initial:
Drawn by: | Date: | Checked by:
Reviewed by: | Submitted by: | Scale: Shop Dwgs.
Drawing date: | Revision Req Date: | Drawing Scale:

DEPARTMENT OF THE AIR FORCE
325 CONTRACTING SQ.
TYNDALL AFB, FL

BASE PROJECT NUMBER: XLWU98-1063
REPAIR VENTILATION, BLDG 315 PAINT BARN
TYNDALL AFB, FL
100% DESIGN SUBMISSION

DRAWING TITLE:
DATA SHEET - ELECTRICAL

Sheet Reference Number:
E-1

Sheet 9 of 9

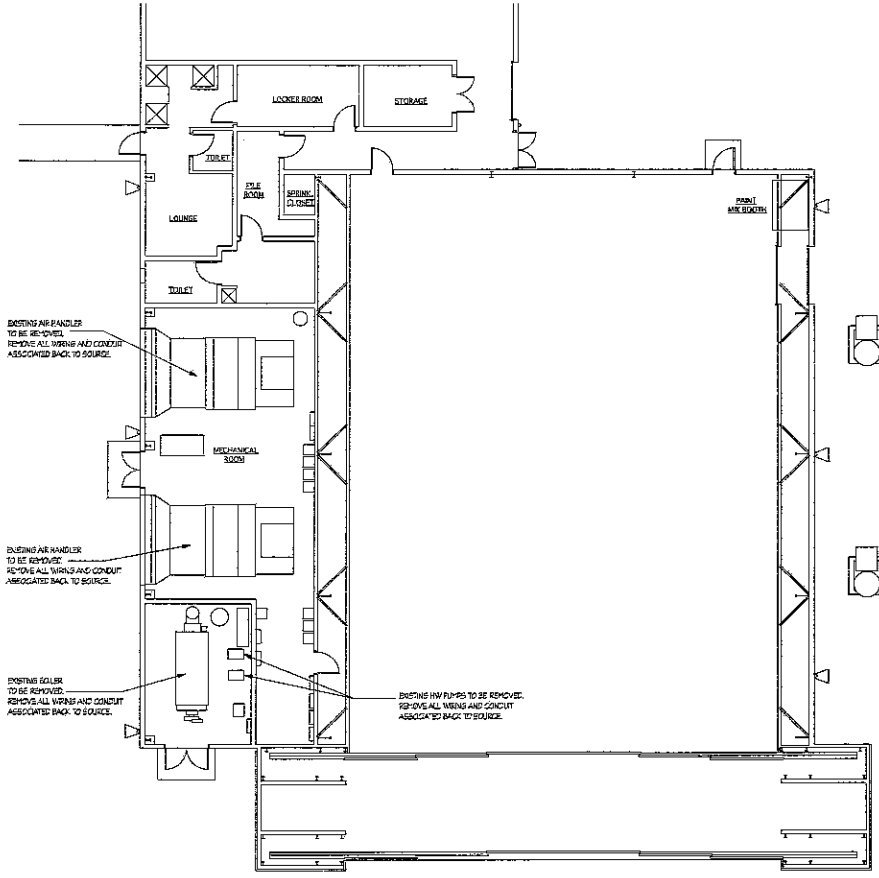

1 / S-2 FLOOR PLAN - DEMOLITION
SCALE 1/8" = 1'-0"

GENERAL

A. REMOVE/RELOCATE SUCH WORK AS REQUIRED TO PERMIT NEW CONSTRUCTION.
B. EXCEPT AS OTHERWISE NOTED, ALL EXISTING ELECTRICAL WORK WHICH WILL NOT BE REQUIRED OBSOLETE AND WHICH MAY BE DISTURBED DUE TO ANY CHANGES REQUIRED UNDER THIS CONTRACT SHALL BE RESTORED TO ITS ORIGINAL OPERATING CONDITION. OTHER ELECTRICAL WORK OR MATERIAL RENDERED OBSOLETE SHALL BE REMOVED UNLESS OTHERWISE NOTED.
C. WHERE EXISTING ELECTRICAL WORK INTERFERES WITH NEW WORK AND WHERE SUCH INSTALLATIONS ARE TO REMAIN IN USE, THE INSTALLATIONS SHALL BE RELOCATED AND/OR RECONNECTED TO COORDINATE WITH THE WORK INDICATED ON THE CONTRACT DRAWINGS AND AS SPECIFIED. FOR EXISTING INSTALLATION WHICH INVOLVE BASE BUILDING SYSTEMS, OBTAIN APPROVAL OF OWNERS REPRESENTATIVE PRIOR TO MAKING ANY MODIFICATIONS.
D. WHERE EXISTING RACEWAYS THAT ARE NOT TO BE RE-USED INTERFERE WITH NEW WORK, THESE RACEWAYS SHALL BE REMOVED BACK TO THE NEAREST JUNCTION BOX AND THE OPENINGS BLANKED OFF.
E. MAINTAIN CONTINUITY OF THOSE FEEDERS AND/OR BRANCH CIRCUITS SERVING MULTIPLE ITEMS OF WHICH ONE OR MORE ARE BEING REMOVED. CONDUCTORS AND CONDUITS FOR THOSE ITEMS BEING REMOVED SHALL BE DISCONNECTED AND REMOVED AS FAR BACK TO THE SOURCE AS PRACTICAL. REMOVE BACK TO SOURCE IF POSSIBLE.
F. REMOVE ALL EXISTING ELECTRICAL EQUIPMENT IN THE AREAS TO BE RENOVATED, INCLUDING LIGHTING FIXTURES, SWITCHES, EXPOSED CONDUIT, SURFACE AND FLUSH DEVICE BOXES, DEVICE PLATES, ETC. REMOVE ALL ACCESSIBLE WIRING & CONDUIT BACK TO EXISTING PANELS. CUT BACK, CAP AND ABANDON ALL CONCEALED CONDUITS.
EXCEPTION:

1. PANELS, FEEDERS, TRANSFORMERS, FIRE ALARM SYSTEM, ETC.
2. EQUIPMENT INDICATED ON THE DRAWINGS TO REMAIN.
3. EQUIPMENT INDICATED BY BASE BUILDING OWNER TO REMAIN.

G. MAINTAIN AND RESTORE, IF INTERRUPTED, ALL CONDUITS AND FEEDERS PASSING THROUGH RENOVATED AREAS AND SERVING UNDISTURBED AREAS.
H. CONTRACTOR SHALL CLEAN THE PROJECT SITE AT THE END OF EACH WORKING DAY AFTER REMOVAL OF ALL DEVICES. CONTRACTOR SHALL TURN ALL DEVICES OVER TO OWNERS REPRESENTATIVE FOR INSPECTION. AFTER INSPECTION BY THE OWNERS REPRESENTATIVE, ALL UNUSED MATERIALS SHALL BE REMOVED FROM THE JOB SITE AND PROPERLY DISPOSED.
I. HOLES IN FLOORS, WALLS AND CEILINGS TO REMAIN WHICH ARE CAUSED BY DEMOLITION OR REMOVAL OF ELECTRICAL CONDUITS, PANELS, FEEDERS AND EQUIPMENT SHALL BE PATCHED/REPAIRED TO MATCH THE SURROUNDING SURFACE AND TO MAINTAIN REQUIRED FIRE RATING.
J. ALL ELECTRICAL INSTALLATIONS OUTSIDE THE CONSTRUCTION AREA WHICH ARE DISRUPTED OR DAMAGED AS A RESULT OF CONSTRUCTION SHALL BE REPAIRED OR REPLACED BY THE CONTRACTOR AT NO COST TO THE BUILDING OWNER.

2. PROTECTION:

A. PROTECT FROM DAMAGE ALL EXISTING WORK TO REMAIN. ANY EXISTING-TO-REMAIN OR EXISTING-TO-BE-RELOCATED MATERIALS AND EQUIPMENT DAMAGED DURING THE COURSE OF THE WORK SHALL BE REPLACED WITH MATERIALS AND EQUIPMENT CONFORMING TO THESE SPECIFICATIONS, AT NO ADDITIONAL COST TO THE OWNER.

3. TERMINATION AND PATCHING:

A. DISCONNECT EXISTING-TO-BE-REMOVED OR EXISTING-TO-BE-RELOCATED CONDUIT, WIRING, CABLING, AND EQUIPMENT FROM EXISTING-TO-REMAIN POINTS INDICATED. IF NOT INDICATED, VERIFY POINT WITH THE OWNERS REPRESENTATIVE PRIOR TO DISCONNECTION.
B. CAP EXISTING-TO-REMAIN WALL OUTLETS, JUNCTION BOXES, WITH DEVICE PLATES TO MATCH EXISTING.
C. WHERE EXISTING FLOORS, WALLS AND ROOFS MUST BE CUT OR ARE DAMAGED DURING REMOVAL OR RELOCATION OF ELECTRICAL WORK, PATCH THE CUT OR DAMAGED AREAS TO MATCH ADJACENT CONSTRUCTION.

K. EXISTING CONDITIONS WERE TAKEN FROM ORIGINAL DRAWINGS AND SITE VISIT AND MAY NOT REFLECT EXACT "AS-BUILT" CONDITIONS. CONTRACTOR SHALL FIELD VERIFY ALL EXISTING CONDITIONS PRIOR TO SUBMITTING FINAL BIDS. CONTRACTOR SHALL CAREFULLY COORDINATE NEW WORK AND DEMOLITION WITH ALL OTHER DISCIPLINES AND EXISTING CONDITIONS.

Allan R. Sharaff
A R S P E C I A L I S T
RYAN & SHARAFF, INC.
Date | Description | Add | Dwg
CMPC
6851 Oak Hall Lane
Suite 200
Columbia, MD 21045
443-876-1994

Date: 06/15/11 | Rev:
Designed by: | Dwg. No.
Drawn by: | CH 1/2" | Checked by: | Drawing date:
Submitted by: | Revision Date: | Dwg Scale:

DEPARTMENT OF THE AIR FORCE
AIR COMBAT COMMAND
TYNDALL AFB, FL

BASE PROJECT NUMBER: XLWU98-1063
REPAIR VENTILATION, BLDG 315 PAINT BARN
TYNDALL AFB, FL
100% DESIGN SUBMISSION

DRAWING TITLE: FLOOR PLAN - DEMOLITION

Sheet Reference Number: E-2

Sheet 7 of 9

MECHANICAL EQUIPMENT CONNECTION SCHEDULE

ITEM NO	LOAD	VOLTS	AMPS	PH	FLA	HP	MCA	MOCP	CONNECTION	DISCONNECT	PANEL	CKT NO	WIRE	CONDUIT
AHU-1	AHU-1	480	77	3	69.9	50.0	96.3	100	SINGLE PT	100A FSS	MCC	3	3#3,1#8G	1 1/2"
AHU-2	AHU-2	480	77	3	69.9	50.0	96.3	100	SINGLE PT	100A FSS	MCC	4	3#3,1#8G	1 1/2"
EF-1	EF-1	480	96	3	79.7	75.0	120	150	SINGLE PT	150A FSS	MCC	2	3#1,1#6G	1 1/2"
EF-2	EF-2	480	96	3	79.7	75.0	120	150	SINGLE PT	150A FSS	MCC	3	3#1,1#6G	1 1/2"
HWBP-1	HWBP-1	480	14	3	11.8	10.0	17	20	SINGLE PT	30A FSS	MCCB	5	3#12,1#12G	3/4"
HWBP-2	HWBP-2	480	14	3	11.8	10.0	17	20	SINGLE PT	30A FSS	MCCB	6	3#12,1#12G	3/4"

COORDINATE WITH MECHANICAL FOR EXACT EQUIPMENT LOCATIONS.
VERIFY ALL ELECTRICAL REQUIREMENTS WITH NAME PLATE DATA.

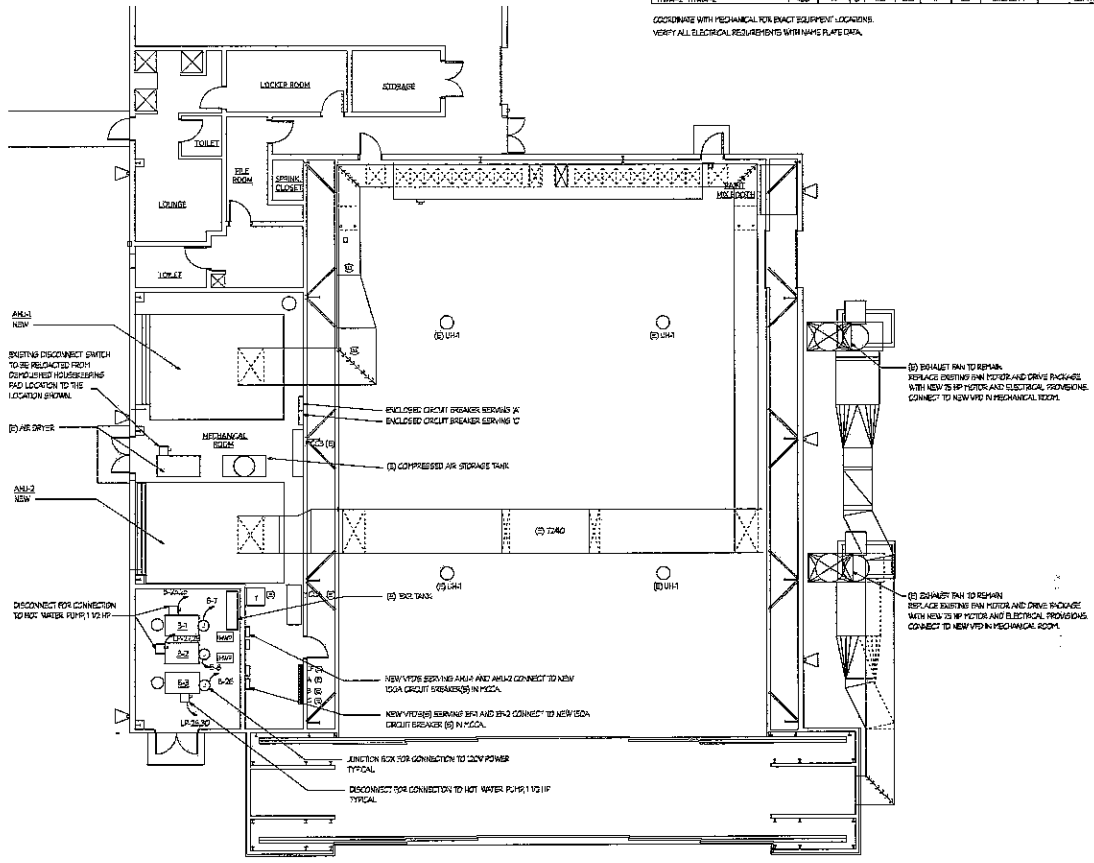

1 / E-3 FLOOR PLAN - POWER
SCALE: 1/8" = 1'-0"

Allen & Shariff
Consulting Engineers, Inc.

ARCHITECTS
6851 Oak Hall Lane
Suite 230
Columbia, MD 21045
443-276-1991

Date	Description	Dwn	Chkd

Designed by:
Drawn by:
Reviewed by:
Submitted by:
Date: 06/15/11
Job No.
Drawing scale
File name: Plot Date: Dwg Scale:

DEPARTMENT OF THE AIR FORCE
325 CES/CEC
TYNDALL AFB, FL

BASE PROJECT NUMBER: XLWU98-1063
REPAIR VENTILATION, BLDG 315 PAINT BARN
TYNDALL AFB, FL
100% DESIGN SUBMISSION

DRAWING TITLE:
FLOOR PLAN - ELECTRICAL

Sheet Reference Number:
E-3

Sheet 8 of 9

PANEL A SCHEDULE (EXISTING)

PANEL: A — VOLTS= 208 / 120 — AMPS= 225A — SPACES= 42 — TYPE= MCB — AIC= EXISTING

CKT NO	LOAD	TRIP	POLE	VOLT	KVA	WIRE	COND	NOTES
1	EXISTING SHOP LIGHTING	20	1	120	1.0	EXISTING	EX.	
2,4,6	EXISTING PAINT BOOTH	20	3	208	1.8	EXISTING	EX.	
3	EXISTING SMALL PAINT BOOTH	20	1	120	1.0	EXISTING	EX.	
5	EXISTING SMALL PAINT BOOTH	20	1	120	1.0	EXISTING	EX.	
7	EXISTING HOT WATER HEATER	20	1	120	1.5	EXISTING	EX.	
8,10	EXISTING	20	2	208	2.0	EXISTING	EX.	
9	EXISTING SHOP LIGHTING	20	1	120	1.2	EXISTING	EX.	
11	EXISTING SHOP LIGHTING	20	1	120	1.2	EXISTING	EX.	
12,14	EXISTING AIR HEATERS	20	2	208	1.8	EXISTING	EX.	
13	EXISTING SHOP LIGHTING	20	1	120	1.0	EXISTING	EX.	
15	EXISTING SHOP LIGHTING	20	1	120	1.0	EXISTING	EX.	
16	EXISTING	20	1	120	0.0	EXISTING	EX.	
17	EXISTING	20	1	120	0.3	EXISTING	EX.	
18	EXISTING	20	1	120	0.5	EXISTING	EX.	
19	EXISTING	20	1	120	0.5	EXISTING	EX.	
20	EXISTING	20	1	120	0.5	EXISTING	EX.	
21	EXISTING JUNCTION BOX	20	1	120	0.5	EXISTING	EX.	
22	SPARE	20	1	120	0.0			
23	EXISTING JUNCTION BOX	20	1	120	1.0	EXISTING	EX.	
24	EXISTING	20	1	120	1.0	EXISTING	EX.	
25	EXISTING JUNCTION BOX	20	1	120	0.5	EXISTING	EX.	
26	EXISTING AHU-2 CONTROL	20	1	120	0.06	EXISTING	EX.	
27	EXISTING GFI	20	1	120	0.5	EXISTING	EX.	
28	SPACE				0.0			
29	EXISTING GFI	20	1	120	0.0	EXISTING	EX.	
30	SPACE	20	1		0.0			

PANEL NOTES:

20.0 = TOTAL KVA CONNECTED

241 = TOTAL AMPS

PANEL B SCHEDULE (EXISTING)

PANEL: B — VOLTS= 208 / 120 — AMPS= 225 — SPACES= 42 — TYPE= MCB — AIC= EXISTING

CKT NO	LOAD	TRIP	POLE	VOLT	KVA	WIRE	COND	NOTES
1	EXISTING OVERHEAD BAY LIGHTS	20	1	120	1.0	EXISTING	EX.	
2	EXISTING	20	1	120	0.5	EXISTING	EX.	
3	EXISTING OVERHEAD BAY LIGHTS	20	1	120	1.0	EXISTING	EX.	
4	EXISTING	20	1	120	0.5	EXISTING	EX.	
5	EXISTING BAY LIGHTS	20	1	120	1.0	EXISTING	EX.	
6	EXISTING AIR DRYER	20	1	120	0.5	EXISTING	EX.	
7	BOILER	15	1	120	1.2	2 #12, 1 #12G	3/4"	(NEW)
8	BOILER	15	1	120	1.2	2 #12, 1 #12G	3/4"	(NEW)
9	EXISTING BAY LIGHTS	20	1	120	1.2	EXISTING	EX.	
10	EXISTING BAY LIGHTS	20	1	120	1.2	EXISTING	EX.	
11	EXISTING BAY LIGHTS	20	1	120	1.2	EXISTING	EX.	
12	EXISTING PLENUM & WALL LIGHTS	20	1	120	0.5	EXISTING	EX.	
13	EXISTING PLENUM & WALL LIGHTS	20	1	120	0.5	EXISTING	EX.	
14	EXISTING BAY LIGHTS	20	1	120	1.0	EXISTING	EX.	
15	EXISTING EXTERIOR LIGHTS	20	1	120	0.5	EXISTING	EX.	
16	EXISTING EXTERIOR LIGHTS	20	1	120	0.5	EXISTING	EX.	
17	EXISTING WALL LIGHTS	20	1	120	0.5	EXISTING	EX.	
18	EXISTING AIR DRYER	20	1	120	1.0	EXISTING	EX.	
19	EXISTING WALL LIGHTS	20	1	120	0.5	EXISTING	EX.	
20	EXISTING AIR DRYER	20	1	120	1.0	EXISTING	EX.	
21	EXISTING FORKLIFT LIGHT	20	1	120	0.3	EXISTING	EX.	
22	EXISTING WALL LIGHTS	20	1	120	0.5	EXISTING	EX.	
23,25	HOT WATER PUMP	30	2	208	4.3	2 #10, 1 #10G	3/4"	(NEW)
24	EXISTING WALL LIGHTS				0.5	EXISTING	EX.	
26	BOILER	15	1	120	1.2	2 #12, 1 #12G	3/4"	(NEW)
27,29	HOT WATER PUMP	30	2	208	4.3	2 #10, 1 #10G	3/4"	(NEW)
28,30	HOT WATER PUMP	30	2	208	4.3	2 #10, 1 #10G	3/4"	(NEW)

PANEL NOTES:

31.5 = TOTAL KVA CONNECTED

151 = TOTAL AMPS

PANEL C SCHEDULE (EXISTING)

PANEL: C — VOLTS= 208 / 120 — AMPS= 225A — SPACES= 42 — TYPE= MCB — AIC= EXISTING

CKT NO	LOAD	TRIP	POLE	VOLT	KVA	WIRE	COND	NOTES
1	EXISTING SHOP LIGHTING	20	1	120	0.8	EXISTING	EX.	
2	EXISTING SHOP LIGHTING	20	1	120	1.0	EXISTING	EX.	
3	EXISTING SHOP LIGHTING	20	1	120	0.8	EXISTING	EX.	
4	EXISTING SHOP LIGHTING	20	1	120	1.0	EXISTING	EX.	
5	EXISTING SMALL PAINT BOOTH	20	1	120	1.5	EXISTING	EX.	
6	EXISTING PAINT BOOTH	20	1	120	0.0	EXISTING	EX.	
7	EXISTING HOT WATER HEATER	20	1	120	0.6	EXISTING	EX.	
8	SPARE	20	1	120	0.0		EX.	
9	EXISTING HOT WATER HEATER	20	1	120	1.5	EXISTING	EX.	
10	EXISTING SECURITY CAMERA	20	1	120	1.5	EXISTING	EX.	
11	EXISTING LOCKER ROOM LIGHTS	20	1	120	0.8	EXISTING	EX.	
12	SPARE	20	1	120	0.0		EX.	
13	EXISTING AIR CONDITIONER	20	1	120	1.5	EXISTING	EX.	
14	SPARE	20	1	120	0.0		EX.	
15	EXISTING AIR CONDITIONER	20	1	120	1.5	EXISTING	EX.	
16	SPARE	20	1	120	0.0		EX.	
17	EXISTING RECEPTACLES	20	1	120	0.8	EXISTING	EX.	
18	EXISTING AIR DRYER	20	1	120	1.0	EXISTING	EX.	
19	SPARE	20	1	120	0.0		EX.	
20	EXISTING OUTSIDE BOOTH	20	1	120	1.0	EXISTING	EX.	
21	SPARE	20	1	120	0.0			
22	EXISTING OUTSIDE BOOTH	20	1	120	1.0	EXISTING	EX.	
23	SPARE				0.0			
24	EXISTING OUTSIDE BOOTH	20	1		1.0	EXISTING	EX.	
25	EXISTING AIR COMPRESSOR	20	1	120	0.5	EXISTING	EX.	
26	EXISTING RECEPTACLES	20	1		0.6	EXISTING	EX.	
27	EXISTING ICE MACHINE	20	1	120	0.5	EXISTING	EX.	
28	EXISTING RECEPTACLES	20	1		0.0	EXISTING	EX.	
29	SPACE				0.0			
30	EXISTING RECEPTACLES				0.0	EXISTING	EX.	

PANEL NOTES:

10.1 = TOTAL KVA CONNECTED

23.0 = TOTAL AMPS

PANEL LP SCHEDULE (EXISTING)

PANEL: LP — VOLTS= 480 / 277 — AMPS= 100A — SPACES= 30 — TYPE= MLO — AIC= EXISTING

CKT NO	LOAD	TRIP	POLE	VOLT	KVA	WIRE	COND	NOTES
1	EXISTING OVERHEAD LIGHTS	20	1	277	1.5	EXISTING	EX.	
2	EXISTING OVERHEAD LIGHTS	20	1	277	1.5	EXISTING	EX.	
3	EXISTING OVERHEAD LIGHTS	20	1	277	1.5	EXISTING	EX.	
4	SPARE	20	1	277	0.0			
5	SPARE	20	1	277	0.0			
6	SPARE	20	1	277	0.0			
7	EXISTING DOOR CONTROLLER	20	3	480	1.0	EXISTING	EX.	
8,10,12	EXISTING REFRIGERANT DRYER	20	3	480	2.0	EXISTING	EX.	
9	SPACE		1	277	0.0			(NEW)
11	SPACE		1	277	0.0			(NEW)
13	EXISTING AIR CONDITIONER	20	1	120	1.5	EXISTING	EX.	
14	SPARE	20	1	120	0.0		EX.	
15	EXISTING RECEPTACLES	20	1	120	0.5	EXISTING	EX.	
16	EXISTING AIR DRYER	20	1	120	1.0	EXISTING	EX.	
17	SPACE		1	277	0.0			(NEW)
18	SPACE		1	277	0.0			
19	SPARE	30	1	120	0.0			
20	SPACE			277	0.0			
21	SPACE				0.0			
22	SPACE				0.0			
23	SPACE				0.0			
24	SPACE				0.0			
25	SPACE				0.0			
26	SPACE				0.0			
27	SPACE				0.0			
28	SPACE				0.0			
29	SPACE				0.0			
30	SPACE				0.0			

PANEL NOTES:

9.2 = TOTAL KVA CONNECTED

19.2 = TOTAL AMPS

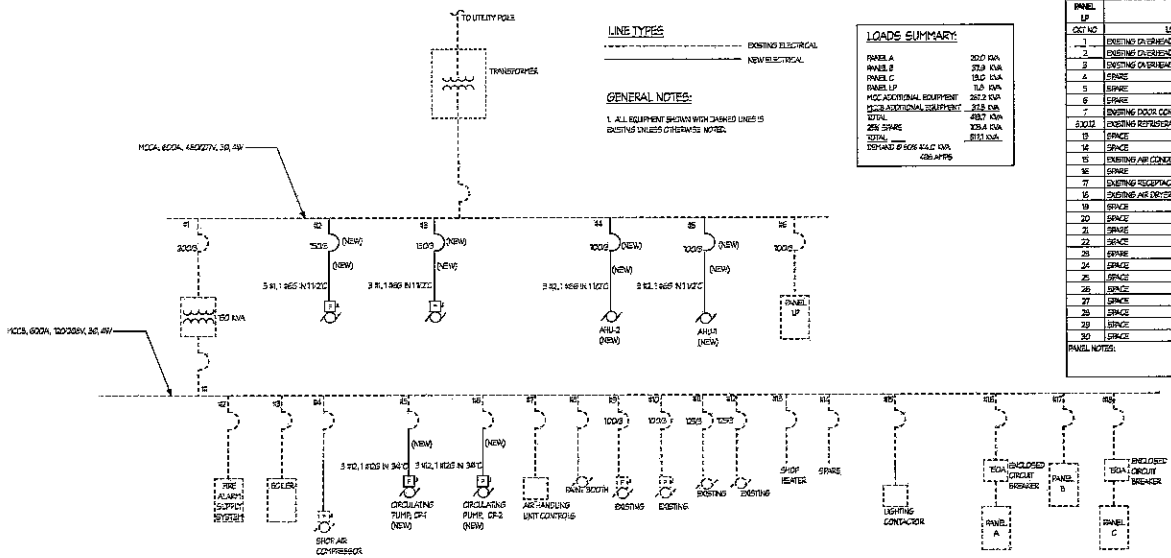

1 / E-4 ELECTRICAL RISER DIAGRAM
NOT TO SCALE

LINE TYPES

EXISTING ELECTRICAL

NEW ELECTRICAL

GENERAL NOTES:

1. ALL EQUIPMENT SHOWN WITH DASHED LINES IS EXISTING UNLESS OTHERWISE NOTED.

LOADS SUMMARY:

PANEL A	20.0 KVA
PANEL B	31.0 KVA
PANEL C	19.0 KVA
PANEL LP	11.5 KVA
MCC ADDITIONAL EQUIPMENT	267.2 KVA
HVAC ADDITIONAL EQUIPMENT	37.5 KVA
TOTAL	486.7 KVA
25% SPARE	121.8 KVA
TOTAL	608.4 KVA
TOTAL @ 80% 486.7 KVA	1011 KVA
	1216 AMPS

Allen & Shaeff
ARCHITECTS, A. P. P. R. E. T. I. C. E. S. INC.
6851 Oak Hall Lane
Suite 200
Columbia, MD 21045
410-290-1994

Date	Description	Rev.

Designed by: | Date: 06/15/11 | Rev.
Drawn by: | Job No.: | Shop No.:
Reviewed by: | Drawing no.:
Submitted by: | File name: | Plot Date: | Plot Scale:

DEPARTMENT OF THE AIR FORCE
325 CONS/LGCEA
TYNDALL AFB, FL

DASII PROJECT NUMBER: XLWU98-1063
REPAIR VENTILATION, BLDG 315 PAINT BARN
TYNDALL AFB, FL
100% DESIGN SUBMISSION

DRAWING TITLE:
DATA SHEET - ELECTRICAL

Sheet Reference Number:
E-4

Sheet 6 of 9

Fulton

Product Data Submittal

Fulton Model: RLN-1500 & RLN-2000

Reliance Series Hydronic Boilers

Dimensions

		RLN-1500/2000
A. Boiler Width	IN	32
	MM	813
B Boiler Height	IN	68
	MM	1727
C. Boiler Depth	IN	34.25
	MM	870
D. Boiler Depth w/trim	IN	46
	MM	1168
E. Exhaust Outlet Height	IN	17
	MM	432
F. Water Inlet Height	IN	6.75
	MM	172
G. Water Outlet Height	IN	46
	MM	1168
H. Min. Clearance to Walls	IN	1
	MM	25
I. Min. Clearance to Front & Rear	IN	36
	MM	915
J. Min. Clearance to Ceiling	IN	24
	MM	610
K. Side to Center of Gas Inlet	IN	10.2
	MM	259
L. Side to Center of Air Inlet	IN	23
	MM	584
M. Side to Center of Exhaust Outlet /	IN	16
Water Supply & Return	MM	406
N. Side to Center of Condensate	IN	11.6
	MM	295
O. Side to Center of Water Outlet	IN	16
	MM	406

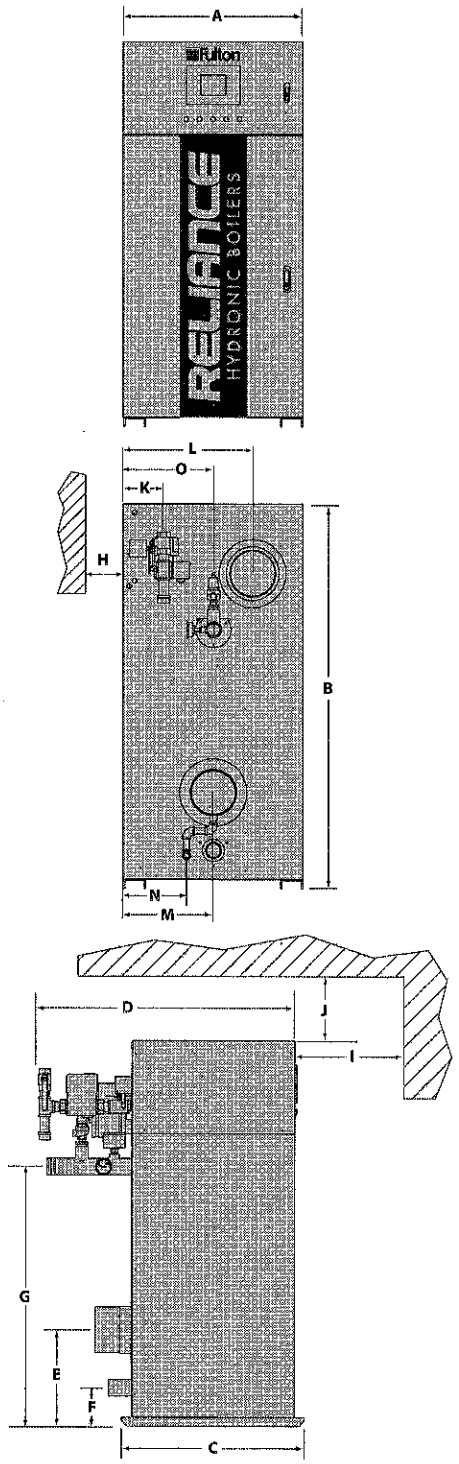

Specifications

		RLN-1500	RLN-2000
Fuel		Natural Gas or Propane	Natural Gas or Propane
Input	Btu/Hr. Max.	1,500,000	2,000,000
	Btu/Hr. Min.	300,000	400,000
Output*	Btu/Hr. Max.	1,260,000	1,680,000
** Based on 140F RWT/160 LWT, High Fire*			
Electrical Requirements	Amps		
	120V/60/1	<7	<7
MAWP	PSI	160	160
Water Content	Gallons	7.3	7.3
	Liters	27.6	27.6
Anchor Bolt Size	IN	.75	.75
	MM	19	19
Boiler Connection Sizes			
Safety Valve Outlet	IN	Dependent on	Dependent on
	MM	trim pressure	trim pressure
Water Inlet & Outlet	IN	2.5	2.5
	MM	63.5	63.5
Air Inlet	IN	8	8
	MM	203	203
Gas Inlet	IN	1.25	1.25
	MM	32	32
Exhaust Outlet	IN	8	8
	MM	203	203
Approximate Weights			
Dry Weight	LB	1000	1000
	KG	454	454
Operating Weight	LB	1060	1060
	KG	481	481

Boiler Controls & Features

- Flame Safeguard - Honeywell SOLA R7910A
- Operating Thermostat - 140 F - 220 F
- High Limit Thermostat - Manual Reset, 100-240 F
- Low Gas Pressure Switch - Manual Reset
- High Gas Pressure Switch - Manual Reset
- High Exhaust Back Pressure Switch
- LWCO / Flow Switch - Paddle Switch
- Combustion Blower - Variable Speed
- Air Switch, Differential Pressure Type
- Main Gas Valve - Dual Solenoid Type
- Temperature/Pressure Gauge
- Safety Relief Valve
- Touch Screen Display
- Diagnostic Annunciator
- Copper Finned Tube, Radial Fired Heat Exchanger
- Variable Speed Drive Blower Motor
- Direct Spark Ignition
- Full Modulation with 5:1 Turndown
- 160 PSIG Maximum Allowable Working Pressure
- 240 F Maximum Allowable Working Temperature
- Low Emissions
- Stainless Steel Inner Jacket
- Powder Coated Outer Jacket

Installation Notes

1. Natural Gas or Propane Pressure Required: 3.5"W.C. - 14"W.C.
2. Flow rate for RLN-1500: 88 gpm min. to 150 gpm max.
3. Flow rate for RLN-2000: 125 gpm min. to 150 gpm max.
4. Requires category IV venting as defined by ANSI Z223.1/NFPA 54 latest addition
5. Standard design pressure is 160 PSIG
6. Standard Trim pressures are 60,100,125 & 160 PSIG. Contact the factory for other trim pressures.

Fulton® The heat transfer innovators.

The Fulton Companies
972 Centerville Road, Pulaski, NY 13142
Call: (315) 298-5121 • Fax: (315) 298-6390

www.fulton.com

Fulton

RELIANCE

High Efficiency Hydronic Boilers
750,000/1,000,000/1,500,000/2,000,000 BTU/HR Input

Installation, Operation and Maintenance Manual

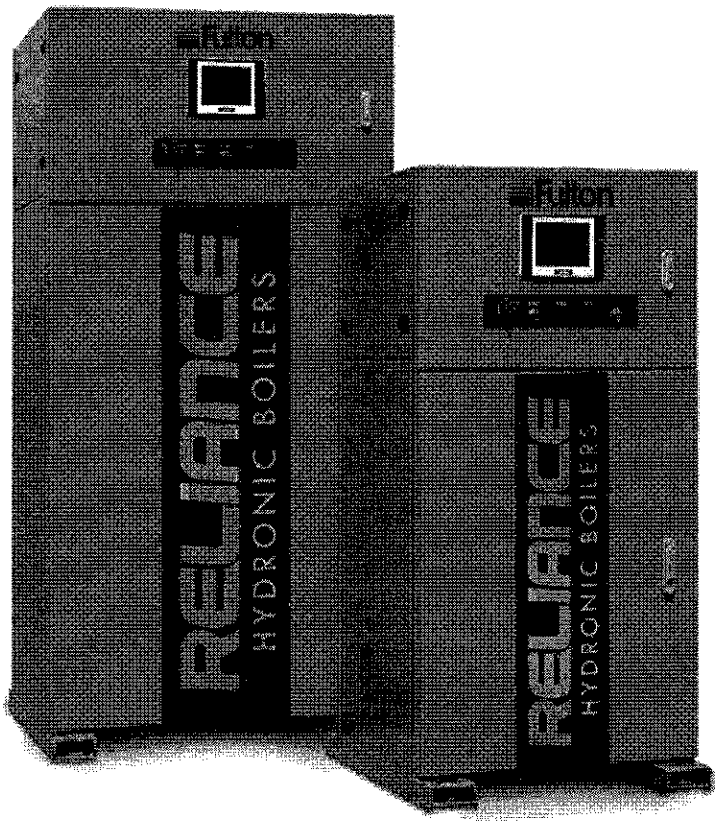

Fulton Heating Solutions, Inc.
972 Centerville Road
Pulaski, NY, 13142
Telephone: (315) 298-5121
Facsimile: (315) 298-6390
www.fulton.com

Table of Contents

Section 1 – Safety Warnings and Precautions

1. Introduction
2. Safety Warnings and Precautions

Section 2 – Installation

1. Boiler Dimensions and Operating Requirements
2. General Information
3. Items Supplied with the Boiler
4. Locating and Installing the Boiler
5. Positioning the Boiler
6. Installing Boiler Trim
7. Installing Water Piping
8. Low Water Cut Off
9. Water Chemistry
10. Freeze Protection
11. Oxygen Contamination
12. Filling the Boiler with Water
13. Installing Gas Piping
14. Venting – General
15. Exhaust Venting
16. Electrical Connections

Section 3 – Operation

1. After Installation and Prior to Start Up
2. Before Operating the Boiler
3. Setting the Sola Control
4. Commissioning/Start-Up
5. Test of Ignition Safety System
6. Test of Low Water Cut Off
7. Test of Limit Controls
8. Test of Low Gas Pressure Switch
9. Test of High Gas Pressure Switch
10. Test of Air Switch
11. Test of High Back Pressure Switch
12. Normal Operation
13. Changing the Operating Set Point
14. Setting Combustion
15. Shut-Down Procedures
16. Viewing the Flame Signal
17. Additional Features of the SOLA Control

Section 4 – Maintenance

1. General
2. Daily Maintenance and Inspection Schedule
3. Weekly Maintenance and Inspection Schedule
4. Monthly Maintenance and Inspection Schedule
5. Annually/Prior to Each Heating Season
6. Procedure for Removal/Cleaning of the Burner
7. Procedure for Removal/Replacement of the Heat Exchanger
8. After All Repairs and Maintenance
9. Troubleshooting
10. Power Outages
11. Flow Requirement
12. Gas Pressure
13. High Water Temperature
14. Low Air
15. Vent Pressure
16. Ignition Failure
17. Flame Failure

Section 5 – Parts and Warranty

1. Purchasing/Ordering Replacement Parts
2. Spare Parts List
3. Reliance Hydronic Boiler Warranty

Table of Contents

Section 1 – Safety Warnings and Precautions

1. Introduction
2. Safety Warnings and Precautions

Section 2 – Installation

1. Boiler Dimensions and Operating Requirements
2. General Information
3. Items Supplied with the Boiler
4. Locating and Installing the Boiler
5. Positioning the Boiler
6. Installing Boiler Trim
7. Installing Water Piping
8. Low Water Cut Off
9. Water Chemistry
10. Freeze Protection
11. Oxygen Contamination
12. Filling the Boiler with Water
13. Installing Gas Piping
14. Venting – General
15. Exhaust Venting
16. Electrical Connections

Section 3 – Operation

1. After Installation and Prior to Start Up
2. Before Operating the Boiler
3. Setting the Sola Control
4. Commissioning/Start-Up
5. Test of Ignition Safety System
6. Test of Low Water Cut Off
7. Test of Limit Controls
8. Test of Low Gas Pressure Switch
9. Test of High Gas Pressure Switch
10. Test of Air Switch
11. Test of High Back Pressure Switch
12. Normal Operation
13. Changing the Operating Set Point
14. Setting Combustion
15. Shut-Down Procedures
16. Viewing the Flame Signal
17. Additional Features of the SOLA Control

Section 4 – Maintenance

1. General
2. Daily Maintenance and Inspection Schedule
3. Weekly Maintenance and Inspection Schedule
4. Monthly Maintenance and Inspection Schedule
5. Annually/Prior to Each Heating Season
6. Procedure for Removal/Cleaning of the Burner
7. Procedure for Removal/Replacement of the Heat Exchanger
8. After All Repairs and Maintenance
9. Troubleshooting
10. Power Outages
11. Flow Requirement
12. Gas Pressure
13. High Water Temperature
14. Low Air
15. Vent Pressure
16. Ignition Failure
17. Flame Failure

Section 5 – Parts and Warranty

1. Purchasing/Ordering Replacement Parts
2. Spare Parts List
3. Reliance Hydronic Boiler Warranty

Section 1

Section 1 – Safety Warnings and Precautions

1. **INTRODUCTION**
    a. This manual is provided as a guide to the correct operation and maintenance of your Fulton Reliance Boiler, and should be permanently available to the staff responsible for the operation of the boiler.
    b. These instructions must not be considered as a complete code of practice, nor should they replace existing codes or standards, which may be applicable.
    c. The requirements and instructions contained in this section generally relate to the standard Fulton Reliance Boiler. When installing a packaged unit, this entire section should be read to ensure that the installation work is carried out correctly.
    d. Prior to shipment the following tests are performed to assure the customer the highest standards of manufacturing.
        i. Material inspections.
        ii. Manufacturing process inspections.
        iii. ASME welding inspections.
        iv. ASME hydrostatic test inspection.
        v. Electrical components inspection.
        vi. Operating test.
        vii. Final engineering inspection
        viii. Crating inspection.
    e. All units are crated for transport. Under no circumstances should weight be allowed to bear on the jacket, control panel, or any part of your Fulton boiler.
    f. A competent rigger experienced in handling heavy equipment should handle rigging your boiler into position.
    g. The customer should examine the boiler for any damage. It is the responsibility of the installer to ensure all parts supplied with the boiler are fitted in a correct and safe manner.
    h. Competent personnel in accordance with all applicable local codes should carry out the installation of the Fulton Reliance Boiler. All state and jurisdictional codes beyond the scope of the applicable ASME Boiler and Pressure Vessel Codes, for its corresponding classification, should be followed in all cases. Jurisdictional authorities must be consulted prior to installation.

2. **SAFETY WARNINGS AND PRECAUTIONS**

   a. **WARNING:** Operating the boiler beyond its design limits can damage the boiler and can also be dangerous. Do not operate the boiler outside its limits. Do not try to upgrade the boiler performance by unapproved modifications. Unapproved modifications can cause injury and damage. Contact your Fulton dealer before modifying the boiler.

   b. **WARNING:** A defective boiler can injure you or others. Do not operate a boiler, which is defective or has missing parts. Make sure that all maintenance procedures are completed before using the boiler. Do not attempt repairs or any other maintenance work you do not understand. Obtain a Service Manual from Fulton or call a Fulton Service Engineer.

   c. PLEASE REVIEW THE TWO TEXT BOXES BELOW:

      i. Text Box 1 of 2:

WARNING: If the information in this manual is not followed exactly, a fire or explosion may result causing property damage, personal injury or loss of life.

-Do not store or use gasoline or other flammable vapors and liquids in the vicinity of this or any other appliances.

-WHAT TO DO IF YOU SMELL GAS

- Do not try to light any appliance.
- Do not touch any electrical switch; do not use any phone in your building.
- Immediately call your gas supplier from a neighbor's phone.
  Follow the gas supplier's instructions.
- If you cannot reach your gas supplier, call the fire department.

-A qualified installer, service agency or the gas supplier, must perform installation and service.

ii. Text Box 2 of 2:

For Your Safety
The following WARNINGS, CAUTIONS, and NOTES appear in various sections of this manual. They are repeated on these safety summary pages as an example and for emphasis. WARNINGS must be observed to prevent serious injury, or death to personnel. CAUTIONS must be observed to prevent damage or destruction of equipment or loss of operating effectiveness. NOTES must be observed for essential and effective operating procedures, conditions, and as a statement to be highlighted. It is the responsibility and duty of all personnel involved in the operating and maintenance of this equipment to fully understand the WARNINGS, CAUTIONS, and NOTES by which hazards are to be eliminated or reduced. Personnel must become familiar with all aspects of safety and equipment prior to operation or maintenance of the equipment.

d. **WARNING:** A qualified installer, service agency, or gas supplier must perform installation and service. Contact your Fulton Heating Solutions representative for guidance.

e. **CAUTION:** The discharge from the safety relief valve shall be so arranged that there will be no danger of scalding personnel or damage to equipment. When the safety relief valve discharge is piped away from the boiler to the point of discharge, there shall be provisions made for properly draining the piping.

f. **WARNING:** No shutoff of any kind shall be placed between the safety relief valve and the boiler or in the discharge pipe between such valve and the atmosphere. Doing so can cause an accidental explosion from overpressure.

g. **CAUTION:** The discharge from the safety relief valve shall be so arranged that there will be no danger of scalding personnel or damage to equipment. When the safety relief valve discharge is piped away from the boiler to the point of discharge, there shall be provisions made for properly draining the piping.

h. **WARNING:** No shutoff of any kind shall be placed between the safety relief valve and the boiler or in the discharge pipe between such valve and the atmosphere. Doing so can cause an accidental explosion from overpressure.

i. **CAUTION:** Some soap used for leak testing is corrosive to certain types of metals. Rinse all piping thoroughly with clean water after leak check has been completed.

j. **WARNING:** Do not use matches, candles, flame or other sources of ignition to check for gas leaks.

k. **WARNING:** Do not use the boiler as support for ducted air piping. Ducted piping must be supported independently of the boiler.

l. **WARNING:** Cements for plastic pipe are flammable liquids and should be kept away from all sources of ignition. Proper ventilation should be maintained to reduce the hazard and to minimize breathing of cement vapors. Avoid contact of cement with skin and eyes.

m. **WARNING:** Never install a barometric damper on flue systems designed with positive pressure.

n. **CAUTION:** Assure all electrical connections are powered down prior to attempting replacement or service of electrical components or connections of the boiler.

o. **WARNING:** If you do not follow these instructions exactly, a fire or explosion may result causing property damage, personal injury, or loss of life.

p. **WARNING:** Do not attempt to start the boiler for any testing before filling and purging the boiler. A dry fire will seriously damage the boiler and may result in property damage or personnel injury and is not covered by warranty.

q. **CAUTION:** Never leave an opened manual air vent unattended. In the event an opened vent is left unattended, water damage could occur.

r. **WARNING:** Before commissioning the boiler, verify with authorized personnel that the gas lines have been purged.

s. **WARNING:** Never attempt to operate a boiler that has failed to pass all the safety checks described below.

t. **WARNING:** After checking controls by manual adjustment, make sure they are always reset to their proper settings.

u. **CAUTION:** Do not attempt to alter any password protected preset values unless you are factory trained personnel.

v. **WARNING:** A qualified and knowledgeable individual, such as a Fulton heating Solutions representative, qualified installer, service agency, or gas supplier, must perform Installation and service.

w. **WARNING:** Proper lockout / tagout procedures must be employed when servicing this unit.

x. **WARNING:** Label all wires prior to disconnection when servicing controls. Wiring errors can cause improper and dangerous operation.

y. **WARNING:** Follow proper lockout / tagout procedures for the electrical, gas, and water connections. Use caution when lifting heavy parts.

z. **WARNING:** Heat Exchanger is heavy and may cause injury if improperly handled. Only knowledgeable and experienced personnel should perform removal of the heat exchanger.

Section 2

Section 2 – Installation

1. BOILER DIMENSIONS AND OPERATING REQUIREMENTS:

Model RLN	750	1000	1500	2000
Input (BTU/HR)	750,000	1,000,000	1,500,000	2,000,000
Output (BTU/HR)	637,500	850,000	1,275,000	1,700,000
Natural Gas Consumption (ft3/h)	735	980	1471	1961
Propane Consumption (ft3/h)	292	389	600	800
Min/Max Gas Supply pressure ("wc)	3.5/14	3.5/14	3.5/14	3.5/14
Approx Dry Weight (lbs)	700	700	1000	1000
Control Voltage (V/HZ/PH)	120/60/1	120/60/1	120/60/1	120/60/1
Blower Voltage (V/HZ/PH)	120/60/1	120/60/1	120/60/1	120/60/1
Gas Connection (")	1	1	1.25	1.25
Water Inlet/Outlet Connection (")	2	2	2.5	2.5
Flue Connection (")	6	6	8	8
Air Intake Connection (")	6	6	8	8
Boiler Width (")	24	24	32	32
Boiler Height (")	51	51	68	68
Boiler Depth with outlet casting (")	39	39	46	46
Amp Draw	<3	<3	<7	<7

2. GENERAL INFORMATION:

a. This instruction manual must be posted and maintained in a legible condition.

b. The Fulton Reliance hot water boiler is an automatic, fuel-fired, high-efficiency boiler. The boiler can either be of the sealed combustion/direct vent type or utilize conventional combustion air intake and flue methods.

c. The boiler is capable of sidewall venting when the appropriate venting materials are used.

d. It features low emission premix combustion with pulse width modulation and fully automatic safety controls.

e. Each boiler is constructed to ASME Section IV and is certified to UL-795. All Reliance boilers are hydrostatically tested, test fired and shipped as a complete packaged unit.

f. Fuel, water and electrical connections are similar to other boilers of this type.

g. All installations must be in accordance with American National Standard "National Fuel Gas Code", latest edition, and with the requirement of local utilities or other authorities having jurisdiction. Such applicable requirements take precedence over general instructions herein.

h. Since an external electrical source is utilized, the boiler, when installed, must be electrically ground in accordance with the National Electric Code, ANSI-NFPA 70, latest edition.

i. This Reliance boiler is to be installed as part of a hydronic heating system. Fulton cannot be held responsible for the selection, engineering, installation, or sizing of any additional equipment or components of the hydronic heating system. A qualified engineer must be consulted for the selection of the equipment and components of the heating system. Various system conditions can result in incorrect heat distribution to users of the heating system.

3. **EACH RELIANCE BOILER IS SUPPLIED WITH THE FOLLOWING:**

   a. Lightweight casing utilizing an air gap as insulation
   b. Integrated combustion supervision and temperature operating control
   c. Operating and high temperature dual temperature probe
   d. Low water flow switch
   e. Fully matched modulating premix combustion system including burner, blower and fuel train controls.
   f. ASME pressure relief valve
   g. Instruction manual
   h. Separate wiring diagram
   i. Combustion Air Adapter
   j. Temperature and pressure (T&P) gauge

4. **LOCATING AND INSTALLING THE RELIANCE BOILER:**

   a. **NOTE:** The Fulton Reliance hot water boiler is not designed for use in systems where water is continuously replenished. The warranty is valid for closed loop systems only.
   b. **NOTE:** The boiler shall be installed such that the ignition system components are protected from water (dripping, spraying, rain, etc.) during boiler operation and service.
   c. **NOTE:** The boiler must be installed on a non-combustible surface.
   d. **NOTE:** "Factory-Trained Personnel" refers to someone who has attended a Fulton service school specifically for to the Reliance boiler.
   e. **SAFETY COMPONENTS:** The end user of the Reliance boiler must maintain all labels on the boiler in clean, legible condition. All connections and safety devices, both mechanical and electrical, must be kept clean, kept with ease of access for inspection, use and maintenance.
   f. **WARNING:** A qualified installer, service agency, or gas supplier must perform Installation and service. Contact you Fulton Heating Solutions representative for guidance.

g. **COMPLIANCE WITH CODES:**

i. The Fulton Reliance Boiler is certified to UL 795 Issue 2006/10/27 Edition 6 UL Standard for Safety Commercial-Industrial Gas heating Equipment. The boiler heat exchanger is manufactured and stamped in accordance with ASME Boiler and Pressure Vessel Code, Section IV for a maximum allowable working pressure and temperature of 160psi and 240F respectively.

ii. Installation of the boiler must conform to all the requirements of all national, state and local codes established by the authorities having jurisdiction or, in the absence of such requirements, in the U.S. to the National Fuel Gas Code, ANSI Z223.1/NFPA 54, latest edition, and the specific instructions in this manual. Authorities having jurisdiction should be consulted before installations are made.

iii. Where required by local codes, the installation must conform to American Society of Mechanical Engineers Safety Code for Controls and Safety Devices for Automatically Fired Boilers (ASME CSD-1).

5. **POSITIONING THE BOILER**

a. The boiler should be located so that the air supply and exhaust piping between the boiler and outside wall/roof are within the maximum lengths for horizontal or vertical venting if sealed combustion will be used. See Figure 1 for minimum clearances between the boiler and any combustible surfaces.

FIGURE 1

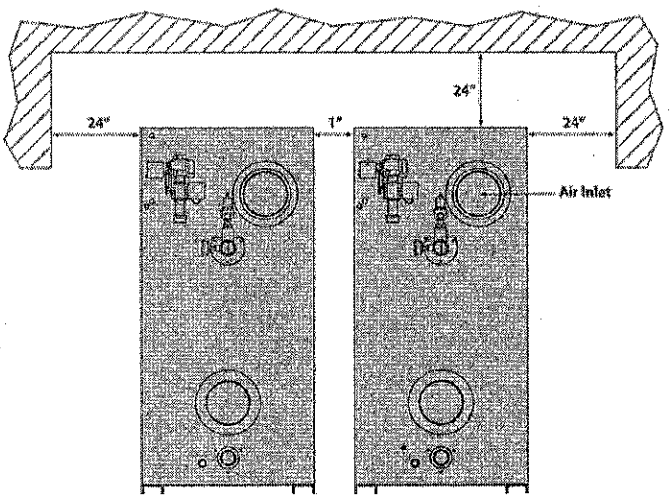

b. This boiler must be installed on a level non-combustible base. A concrete base is preferable.

c. Access to the burner, blower, ignition assembly and other internal components is through the top of the boiler. 1" side clearance is acceptable between boilers.

d. **CAUTION:** This boiler is certified for **indoor** installation only.

e. Ensure that the Reliance boiler is installed on a level surface and oriented in the vertical position.

f. Protect gas ignition system components from water (dripping, spraying, rain etc) during boiler operation and service (circulator replacement, condensate trap service, control replacement etc)

g. Provide combustion and ventilation air in accordance with applicable provisions of local building codes or: USA – National Fuel Gas Code, NFPA 54/ANSI Z223.1, Section 5.3, Air for Combustion and Ventilation.

6. **INSTALLING BOILER TRIM**

a. **Safety Valve** (SEE FIGURE 2)

i. Each Reliance boiler is supplied with a safety relief valve sized in accordance with ASME requirements. The safety relief valve shall be connected to the coupling located in the top of the rear outlet section of the boiler. The safety relief valve must be installed with a 4" nipple between the boiler and the safety valve. The safety relief valve must always be installed in the vertical position. The discharge pipe diameter shall not be less than the full area of the valve outlet. The discharge pipe shall be as short and straight as possible and so arranged as to avoid undue stress on the valve. The discharge piping shall be supported by means other than the safety valve itself, and must be piped to avoid danger of scalding personnel.

FIGURE 2

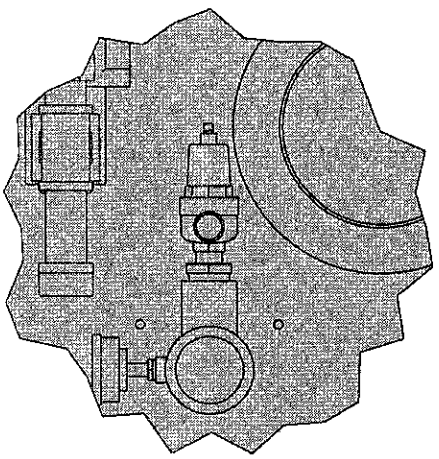

ii. **CAUTION**: The discharge from the safety relief valve shall be so arranged that there will be no danger of scalding personnel or damage to equipment. When the safety relief valve discharge is piped away from the boiler to the

point of discharge, there shall be provisions made for properly draining the piping.

iii. **WARNING:** No shutoff of any kind shall be placed between the safety relief valve and the boiler or in the discharge pipe between such valve and the atmosphere. Doing so can cause an accidental explosion from overpressure.

iv. Each boiler is supplied with a pressure-temperature gauge to be installed in the outlet section of the boiler.

7. **INSTALLING WATER PIPING**

a. The Fulton Reliance Boiler requires a minimum temperature differential across the heat exchanger at high fire and has a minimum flow requirement (see table on page 20). Low flow conditions will cause excessive cycling, damage and failure of the equipment. Piping arrangements should allow heat up times to be at or below 30 seconds to reduce condensation which could result in premature failure of equipment. See Figures 3-5A to review piping arrangements that will satisfy the minimum flow requirements of the boiler.

FIGURE 3
(MULTIPLE BOILERS IN A COMMON HYDRONIC LOOP, RETURN TEMPERATURE >140 F)

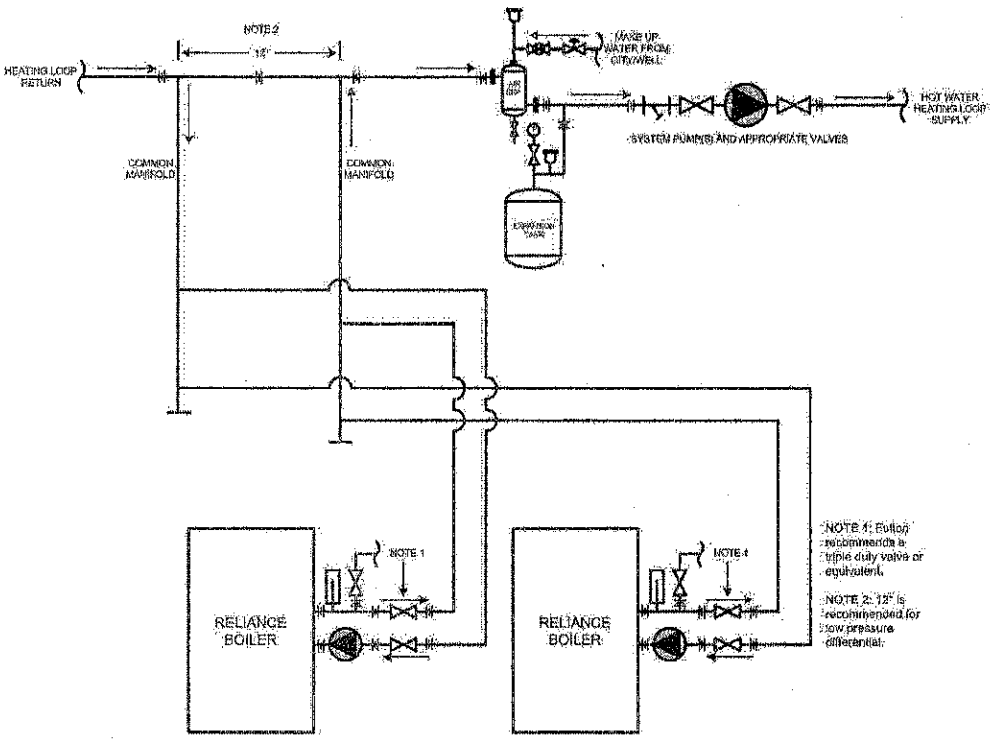

FIGURE 4
(SINGLE BOILER HYDRONIC LOOP, RETURN TEMPERATURE < 140 F)

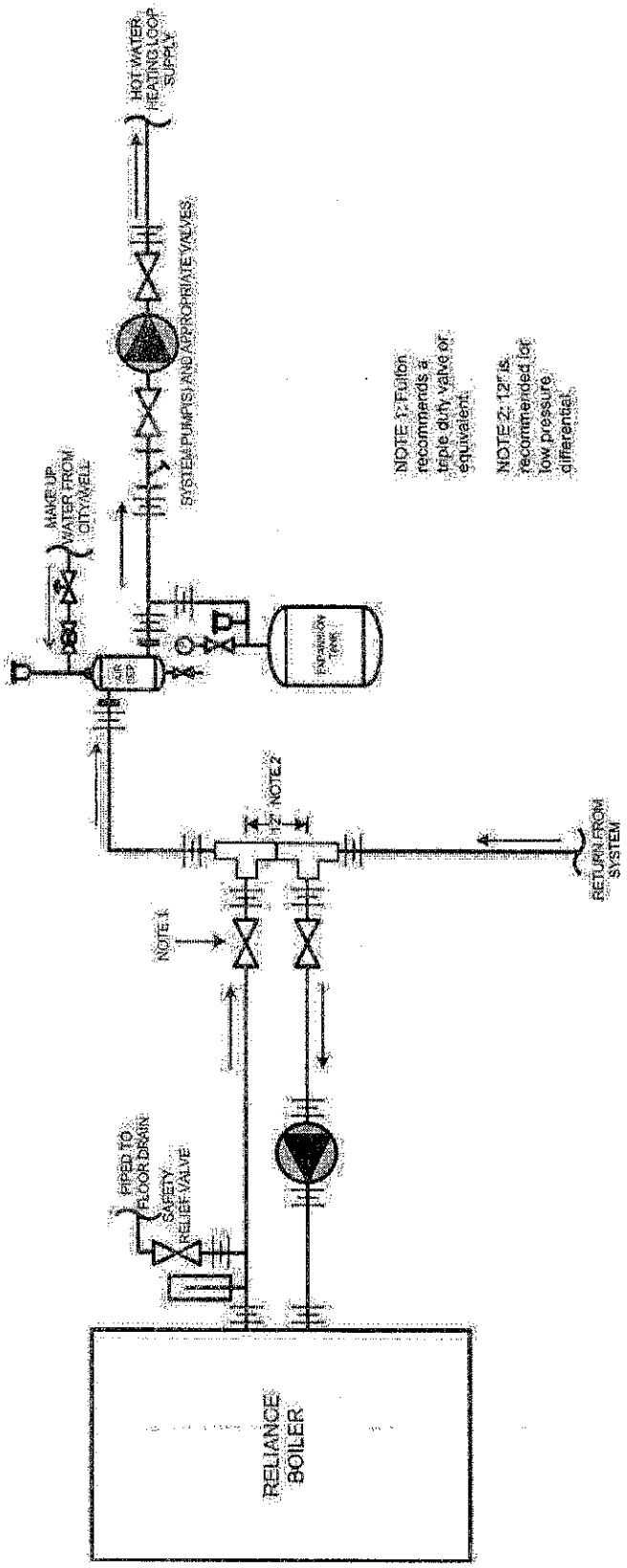

FIGURE 5
(SINGLE BOILER HYDRONIC LOOP, RETURN TEMPERATURE < 140 F)

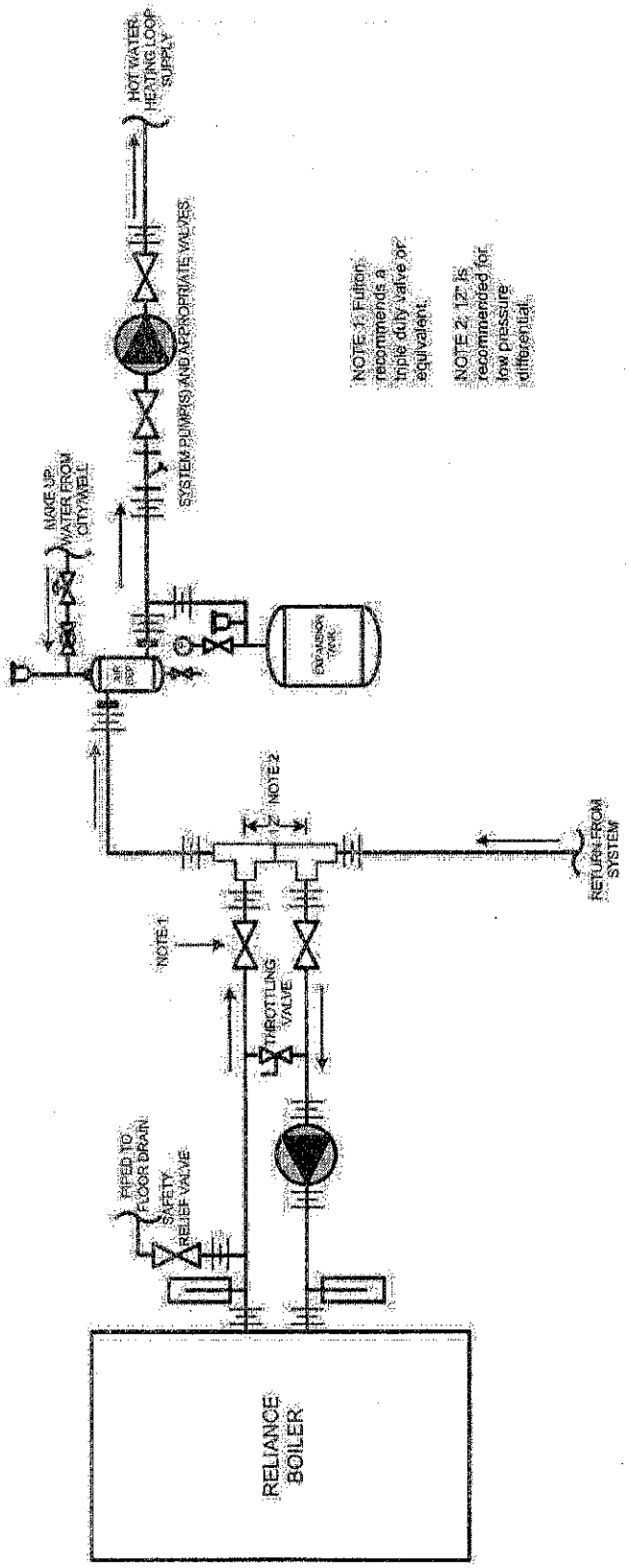

FIGURE 5A
(SINGLE BOILER HYDRONIC LOOP, RETURN TEMPERATURE < 140 F)

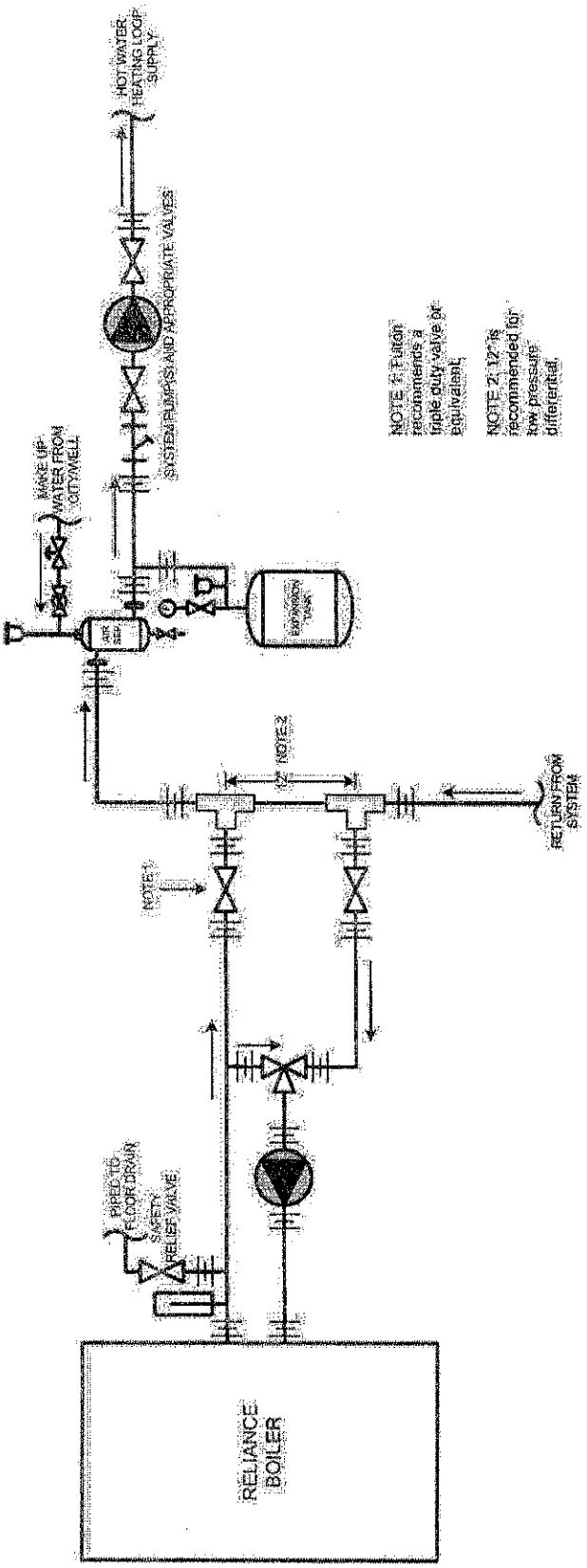

b. Ideal flow rates for the Reliance boiler are:

RLN	750	1000	1500	2000
Min GPM	50	60	125	125
Max GPM	75	75	150	150

c. The boiler warranty does not cover heat exchanger failure related to water flow rates outside of these constraints.

d. The minimum returning water temperature must be held greater than 140° F at all times to avoid condensation in the heat exchanger.

e. The boiler warranty does not cover heat exchanger failure due to condensation of products of combustion.

f. Pipe unions and isolating valves must be installed in both water connections for ease of service.

g. Piping must be installed such that the boiler is not supporting any additional piping.

h. The top water connection on the back of the boiler is the hot water outlet and must be connected as the supply to the system. The bottom connection is the return/boiler inlet.

FIGURE 6

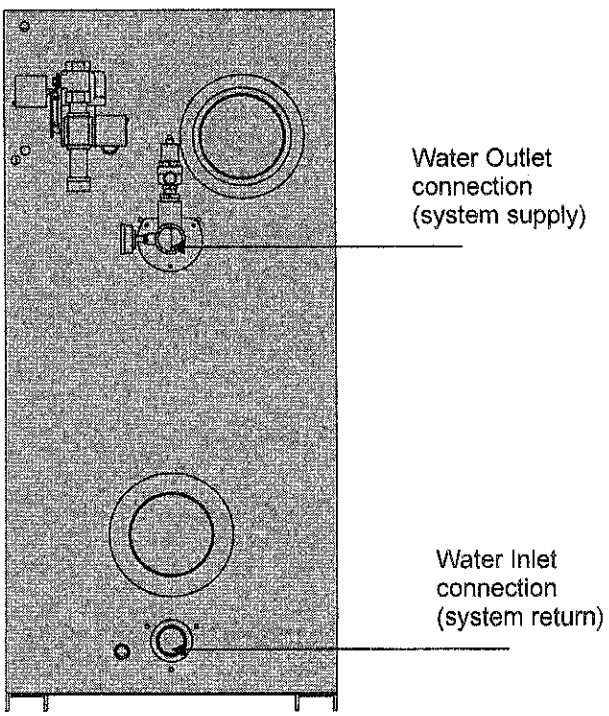

i. Install a hot water circulator, remote mounted from boiler. Do not attach directly to the boiler. Please refer to Figures 3, 4, 5 and 5A for proper location of circulators.

j. Install manual purging valves in all loops and zones. Install a pressure reducing (automatic fill) valve in the cold water fill line to the boiler system.
Check that the proposed operation of zone valves, zone circulator(s) and diverting valves will not isolate air separator(s) and/ or expansion tank(s) from the boiler.
Clearance from hot water pipes to combustibles must be at least 6".

k. The boiler, when used in conjunction with a refrigeration system, must be installed so the chilled medium is piped in parallel with the boiler with appropriate valves to prevent the chilled medium from entering the boiler. If the boilers are connected to heating coils, located in air handling units where they may be exposed to refrigerated air circulation, such boiler piping systems shall be equipped with flow control valves or other automatic means to prevent gravity circulation of the boiler water during the cooling cycle.

l. The boiler is not provided with a drain valve directly on the boiler. A drain valve should be installed near the system return (water inlet) connection to the boiler and piped to a drain.

m. Before installing a Reliance boiler into a hydronic loop, be sure that the system piping and any other components of the system are clean and free of debris and any foreign matter. The hydronic system is completely flushed prior to installing the boiler itself. Install a strainer upstream of each boiler to ensure that no foreign matter will have the opportunity to get inside the heat exchanger.

n. **WARNING:** The hydronic system should never be flushed while the boiler is attached to the system since the debris could accumulate in the boiler and block water from passing through the heat exchanger. This will lead to premature boiler failure.

o. **WARNING:** If the piping system attached to this unit will be chemically cleaned, the boiler must be disconnected from the system and a bypass installed so that the chemical cleaning solution does not circulate through the boiler.

8. LOW WATER CUT OFF

a. The Reliance boiler comes with an installed flow-switch type low water cut-off. The LWCO does not require field piping or wiring. If the flow switch does not sense flow, the boiler will shut down and an alarm condition will be annunciated on the SOLA color screen display.

9. **WATER CHEMISTRY**
   a. System water chemistry requirements:
      i. Maximum hardness of 8.5 grains/150ppm
      ii. Acceptable pH range of 7.5-10
      iii. Solids less than 2500ppm
      iv. Alkalinity less than 500ppm
      v. Foreign matter: Oils, fats, grease, and other matter should be limited to 10 ppm.
   b. Refer to your water conditioning or chemical treatment supplier for analysis and recommendations for proper system conditions. Follow a program with appropriate monitoring and maintenance of system water conditions as provided by your water conditioning or chemical treatment supplier.
   c. The boiler warranty does not cover heat exchanger failure due to inappropriate water quality.
   d. Appropriate flow rates and return water temperature may be achieved through primary and secondary flow loops. Please refer back to Figures 3, 4 and 5 for example systems. Multiple pumps, valves and heating zones operating at a variety of conditions will cause system flow to vary. System design professionals should consider the variety of conditions the heating system will experience.
   e. Reliance boilers should be operated in a closed-loop system using water or water/glycol (not requiring a make-up water supply). A large amount of improperly treated make-up water can cause premature failure of the heat exchanger resulting from scale build up. Heat exchanger failure due to scale is not covered under the warranty. Scale build up will reduce the efficiency and useful life of the boiler.
10. **FREEZE PROTECTION**
   a. If water/glycol is to be used in the system, a hazard analysis should be performed to determine proper use and disposal. No greater than 50% glycol should be used.
   b. Reliance boilers CANNOT be placed outdoors due to the potential for condensate to freeze within the boiler. Precautions for freeze protection are recommended for boiler installations where freezing potential exists and for installations that will use sealed combustion with potential for outdoor air to fall below freezing point.
11. **OXYGEN CONTAMINATION**
   a. Care needs to be taken to eliminate oxygen from the water system. The boiler warranty does not cover heat exchanger replacement due to oxygen contamination of boiler water.
   b. There are several ways to prevent boiler water oxygen contamination:
      i. Minimize system leaks to minimize make up water requirement
      ii. Do not use open tanks or fittings
      iii. Do not use oxygen permeable materials anywhere in the water system

iv. Repair leaks in the system quickly
v. Eliminate fittings wherever possible
vi. Use air elimination devices in system piping.

c. An air separator and air eliminator (air vent) is required to be installed. There are no built in boiler air eliminating features.
   i. If a sealed diaphragm-type expansion tank is used, install an air eliminator in the hot water piping at the air separator.
   ii. If an air cushion type expansion tank is used, pipe tank directly into boiler supply.
   iii. On multi-zoned systems (or a system with both space and domestic water heating), air elimination must be provided either in the common piping or on every loop.
   iv. When the boiler is installed at a higher level than baseboard radiation (if used), air elimination must be provided directly above the unit.

12. **FILLING THE BOILER WITH WATER**
   a. To be sure that the boiler is not air-bound, open the pressure-relief valve located at the rear of the boiler. Leave the relief valve open until a steady flow of water is observed. Close the valve and finish filling the system.

13. **INSTALLING GAS PIPING**
   a. See the table for required natural gas pipe size, based on overall length of pipe from the meter plus equivalent length of fittings. Approximate sizing may be based on 1,020 BTU for 1 cubic foot of natural gas.

Nominal Pipe Size	**ID**	**Equivalent Pipe Length**		**Max Capacity in ft3 of natural gas per hour. Pressure drop of 0.5"wc/Equivalent length of pipe (feet)**						
(")	(")	90 Elb (Feet)	Tee (Feet)	20	40	60	80	100	150	200
1-1/4	1.380	3.45	6.9	950	--------	--------	--------	--------	--------	--------
1-1/2	1.610	4.02	8.04	1460	990	810	--------	--------	--------	--------
2	2.067	5.17	10.3	2750	1900	1520	1300	1150	950	800
2-1/2	2.469	6.16	12.3	4350	3000	2400	2050	1850	1500	1280
3	3.068	7.67	15.3	7700	5300	4300	3700	3250	2650	2280
4	4.026	10.1	20.2	15800	10900	8800	7500	6700	5500	4600

   b. The Reliance boiler is factory test fired and combustion is adjusted per the boiler data plate and test fire sheet.
   c. The gas train components are UL-795 certified to operate at a maximum inlet gas pressure of 14" W.C. If available gas pressure is greater than 14" W.C., a lock up style gas pressure regulator must be provided to reduce the provided pressure to the acceptable range of 3.5" W.C. to 14" W.C. for natural gas, and 7" W.C to 14" W.C. for propane.

d. Small levels of chlorides and/or sulfur presence in the combustion air or fuel will negatively impact the heat exchanger components. Any presence of these contaminants will void the warranty.

FIGURE 7

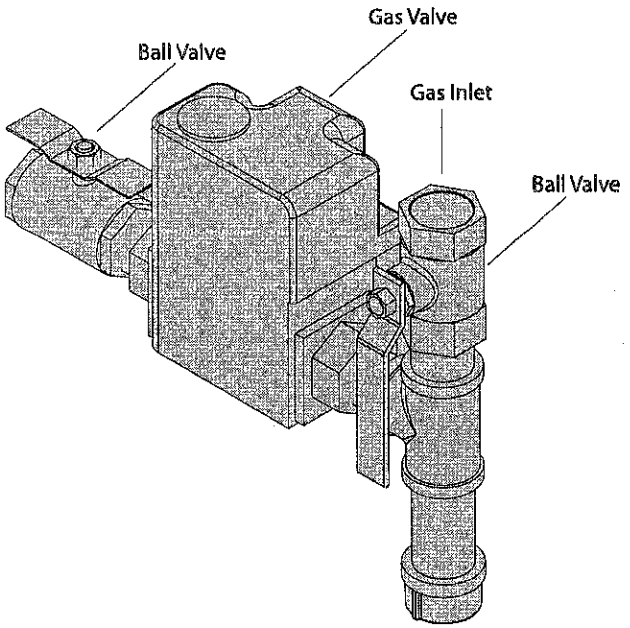

e. A minimum of 3.5" W.C. gas pressure is required for the boiler to operate appropriately with natural gas, and a minimum of 7" W.C. for propane. The standard CSD-1 fuel train provided with each boiler is shown in Figure 7.
    i. Please note that alternate gas train configurations, such as incorporating additional gas valves or gas pressure regulators, may increase minimum gas pressure requirements (ex. Massachusetts State Fuel Codes).
f. Piping must be installed such that no piping stresses are transmitted to the boiler. The boiler **shall not** be used as a pipe anchor.
g. The boiler and all gas piping connections should be pressure-tested and must be checked for leaks before being placed into service. Test with compressed air or inert gas if possible.
h. The boiler must be **disconnected** at the boiler manual shutoff valve (located at the end of the supplied gas train) from the gas supply piping system during any pressure testing of the system at pressures in excess of 1/2 psig (14 inch W.C.).
i. Gas Piping should be installed in accordance with National Fuel Gas Code, ANSI Z223.1 1991 or latest addenda and any other local codes, which may apply.
j. The pipe and the fittings used should be new and free of dirt or other deposits.
k. Piping must be of the proper size to insure adequate gas supply. A drip leg and union connection should be installed upstream of the gas safety shut off valves.

l. Connect gas supply line to the open end of the tee on which the drip leg is installed.

m. When making gas-piping joints, use a sealing compound resistant to liquefied petroleum gases. Do not use Teflon tape on gas line threads.

n. After gas piping is completed and before wiring installation is started, carefully check all piping connections, (factory and field), for gas leaks. Use a soap and water solution or a gas leak detector.

   i. **CAUTION**: Some soaps used for leak testing are corrosive to certain types of metals. Rinse all piping thoroughly with clean water after leak check has been completed.

o. The boiler must be disconnected at the boiler shut off valve from the gas supply piping system during any pressure testing of the system.

p. **WARNING:** Do not use matches, candles, flame or other sources of ignition to check for gas leaks.

14. **VENTING**

a. The boiler can be installed with either sealed combustion or a conventional venting arrangement. With either venting configuration, the difference in pressure readings at the boiler exhaust connection and air intake connection can not exceed 0.5" W.C. This equates to 70 feet and 8 elbows when combining the distances on the air intake and exhaust with the piping diameters matching the standard connections. Also, the pressure at the boiler exhaust connection must not exceed 0.05" W.C. negative. This pressure must remain relatively constant throughout the operation of the boiler.

b. **Appropriate Operating Conditions**

   i. The boiler should not be operated with a negative pressure in the boiler room (unless there is sealed combustion [intake piped outside]). Take particular attention to other equipment installed in the boiler room such as compressors and air handling units.

c. **Combustion Air Supply – General**

   i. Particulate matter or chemicals (example: perchlorethylene, halogenated compounds) in the combustion air supply to the boiler will cause damage or failure to the burner and is not covered under warranty. High-risk situations for particulate matter to be in the air include construction and maintenance activities.

   ii. The installation of an air intake filter is recommended for any Reliance installation where particulate matter >50 microns could enter the boiler. An air intake filter is available as an option from Fulton if required.

      1. The air intake filter must be inspected and, if required, cleaned and/or replaced on a monthly basis at a minimum.

d. **Combustion Air Supply From Boiler Room**

i. Adequate combustion air and ventilation must be supplied to the boiler room in accordance with local codes and NFPA54/ANSI Z233.1, Section 5.3, Air for combustion and ventilation.

ii. The boiler room must meet the NFPA criteria for a non-confined space

FIGURE 8

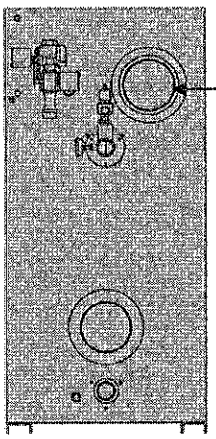

iii. Consistent proper ventilation of the boiler room is essential for good combustion. Install two fresh air openings, one at a low level, within 12" from the floor but not less than 3", and one at a higher level within 12" of the ceiling but not less than 3" in the boiler room wall. This will provide a flow of air to exhaust the hot air from the boiler room.

iv. Each opening must have a minimum of $1in^2$ per 1000 Btu/hr and be no less than $100in^2$.

v. Consideration of the blocking effect of louvers and grills should be made.

e. **Combustion Air from Outside the Building Without Sealed Combustion**

i. If the boiler room is deemed a confined space two permanent ducts connected the outdoors must be installed.

FIGURE 9

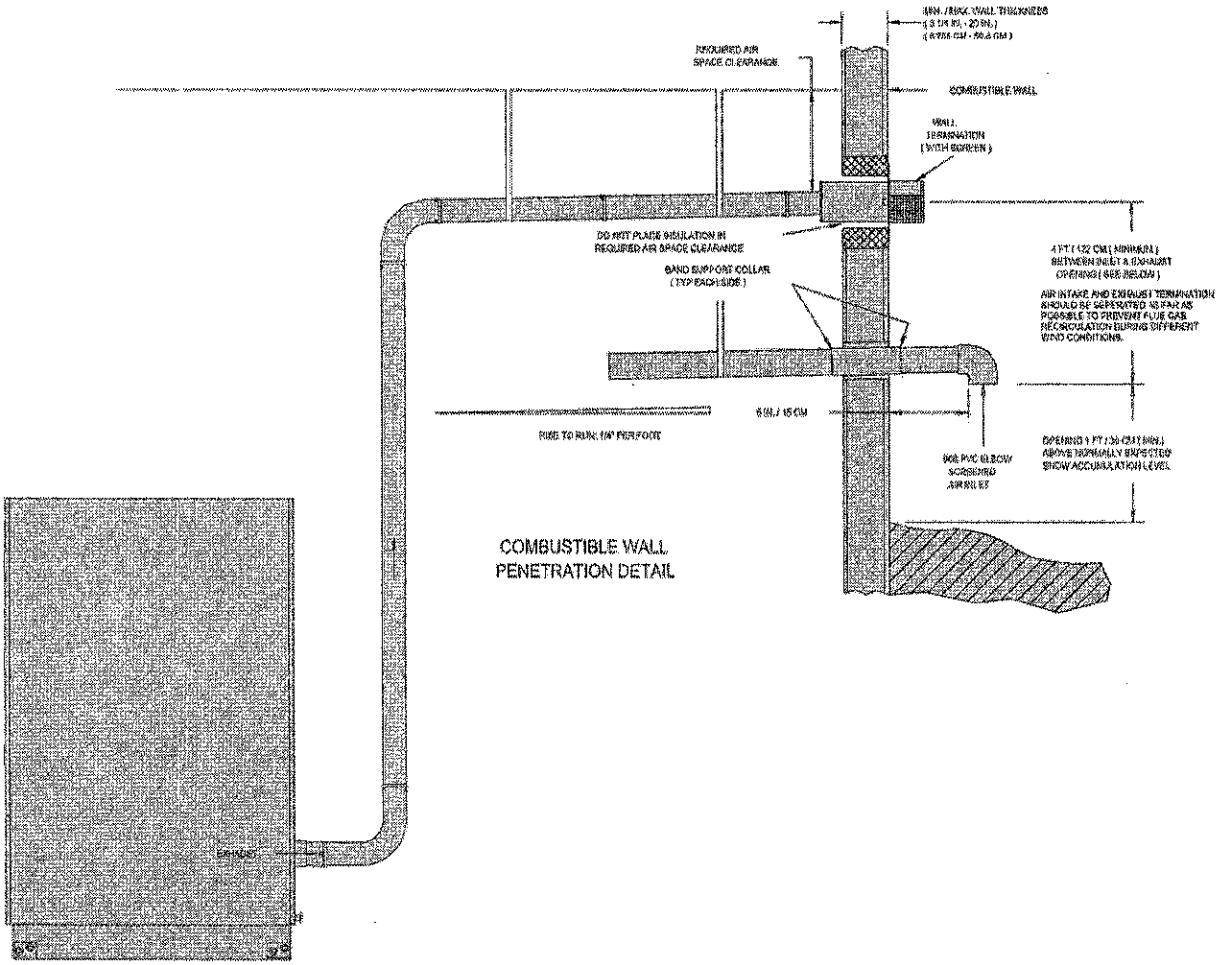

ii. Vertical ducts shall have a minimum cross sectional area of 1" per 4,000 Btu/hr and horizontal ducts shall have a cross section area of at least 1" per 2000 Btu/hr. All combustion equipment within the room must be considered.

f. **Air Piped From Outside Boiler Room**

i. The combustion air supply can be piped directly to the air inlet of the boiler.

ii. A rubber air intake coupling is recommended with boilers specified for installation with ducted air supply. It must be used to connect the intake piping to the boiler air inlet. This rubber air inlet coupling is available from Fulton as an option. See Figure 10.

FIGURE 10

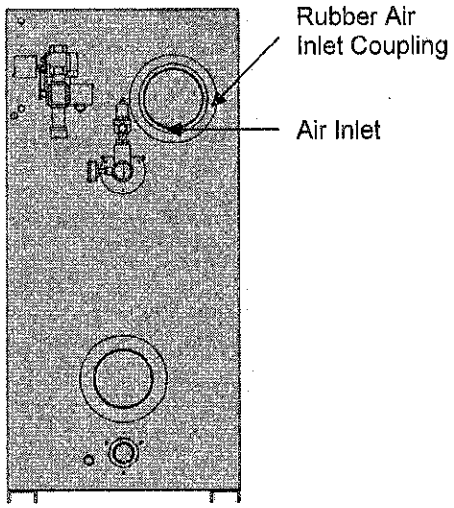

iii. **WARNING**: Do not use the boiler as support for ducted air piping. Ducted piping must be supported independently of the boiler.

iv. The air intake must be piped out of the building if the boiler room contains contaminated air.

g. **Intake Duct Sizing**

i. Air intake ducting must be sized in conjunction with the exhaust venting to provide no greater than a 0.5" W.C. combined pressure drop. This equates to 70 feet and 8 elbows when combining the distances on the air intake and exhaust with the piping diameters matching the standard connections.

ii. The installation of a recognized termination screen is required. Contact your local venting supplier for assistance in venting sizing.

iii. Air Intake pipes and fittings shall be Schedule 40 PVC pipe or galvanized steel. All Schedule 40 PVC pipe, fittings, primer and cement must conform with American National Standard Institute and the American Society for Testing and Materials (ANSI/ASTM standards.)

iv. Intake PVC piping must be assembled using cement. This will ensure that the intake is airtight and will not allow contaminates from the boiler room into the boiler. The cement shall be free flowing and contain no lumps, un-dissolved particles or any foreign matter that adversely affects the joint strength or chemical resistance of the cement. The cement shall not show gelation, stratification, or separation that cannot be removed by stirring.

v. **WARNING**: Cements for plastic pipe are flammable liquids and should be kept away from all sources of ignition. Proper ventilation should be maintained to reduce the hazard and to minimize breathing of cement vapors. Avoid contact of cement with skin and eyes.

vi. The following procedure for cementing joints (per ASTM D2855) should be adhered to:

1. Measure and cut PVC pipe to desired length.
2. Chamfer end of pipe, removing any ridges or rough edges. If end is not chamfered, the edge of the pipe may remove cement from the fitting socket and result in a leaking joint.
3. Clean and dry surfaces to be joined.
4. Test fit joint and mark depth of fitting on pipe outside.
5. Uniformly apply a liberal coat of primer to inside socket surface of fitting and male end of pipe to depth of fitting socket.
6. Promptly apply solvent cement to end of pipe and inside socket surface of fitting. Cement should be applied lightly—but uniformly—to inside of socket. Take care to keep excess cement out of socket. Apply second coat to pipe end.
    a. **NOTE:** Time is critical at this stage. Do not allow primer to dry before applying the cement.
7. Immediately after applying last coat of cement to pipe, while inside socket surface and end of pipe are wet with cement, insert end of pipe into socket, turn pipe 1/4 turn to distribute cement evenly, continue to insert pipe until it bottoms out.
    a. **NOTE:** Assembly should be completed within 20 seconds after last application of cement. Do not use a hammer to insert pipe.
8. After assembly, wipe excess cement from pipe at end of fitting socket. A properly made joint will show a bead around its entire perimeter. Any gaps may indicate a defective assembly due to insufficient cement.
9. Handle joints carefully until completely set.

10. Galvanized steel joints should be sealed with adhesive aluminum tape.

15. **Exhaust Venting:**

a. The Reliance boiler is equipped with a vent connection at the lower rear of the boiler.

FIGURE 11

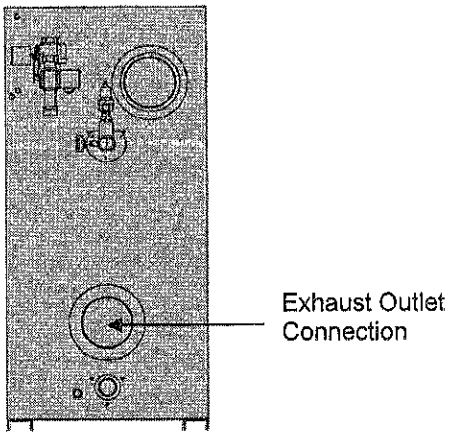

b. The boiler requires a category IV stack. The stack material must be either AL-29-4C or 316L stainless steel and comply with UL-1708 or UL-103. Venting installation must comply with National Fuel Gas Code, ANSI Z233.1, Part 10 or applicable provisions of local building codes.

c. Do not utilize automatic vent dampers or barometric dampers with the Reliance boiler. Because the exhaust system operates at a positive pressure, utilizing dampers could result in exhaust leaking into the boiler room.

d. The exhaust line must be sloped down toward the drain with a pitch of at least 1/4" per foot. Failure to do so can result in a condensate pocket, which can result in an inoperative boiler. There must be no low spots in the exhaust pipe, as this can also result in a condensate pocket. A high spot is acceptable, provided the pitch from the high spot is maintained back to the boiler. Always avoid rigid connections between piping and structural members of the building.

e. The exhaust vent installer should be familiar with these Federal Codes as well as local codes and regulations.

f. Follow vent manufacturer's instructions for installation of exhaust venting.

g. A tee/boot tee with a drain must be installed at the first elbow from the boiler flue outlet. There must be a minimum of 4" of water within a loop style trap (loop diameter 4"). The loop style trap can be high temperature 500° F silicone. See Figure 12.

h. Stainless steel or galvanized steel pipe is recommended for all condensate drain piping. Copper and CPVC are acceptable for common headers only. Be aware that

condensate drain piping can be as hot as the exhaust stack on the boiler, and precautions should be taken to ensure this pipe would not cause burns or other injuries to personnel that may be in the boiler room.

i. Put a small amount of water into the drain piping before connecting to the AL-29-4C exhaust pipe. There must always be water in drain fitting so that flue gas does not enter the boiler room.

j. The condensate connection on the boiler should be piped into the stack drain piping. The pipe from the boiler directed to the drain should be installed at a slope of ¼" per foot.

k. Ensure that the condensate drain piping will not be exposed to temperatures where water/condensate will freeze in the lines.

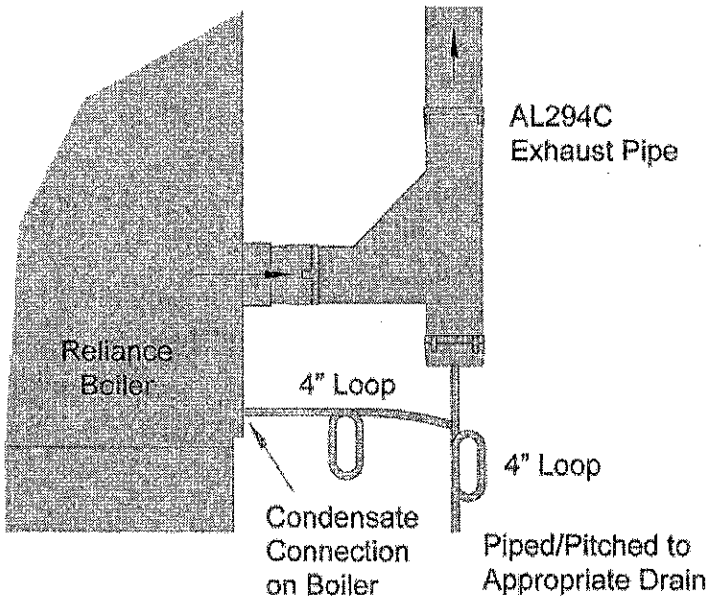

FIGURE 12

Note

The common condensate header must be the lowest point for the condensate to drain properly. Verify that loops are not kinked.

l. **Optional Condensate Drain Kit**

i. The condensate drain kit is intended to be utilized with any size Reliance unit supplied by Fulton. The 3/4" condensate drain on the Reliance unit must be connected to the drain of the "Boot Tee" that must be installed on the exhaust outlet of the boiler and then tied together to the 1" inlet on the drain

kit. One or more drain lines may be connected to this inlet (maximum of 8 total per drain kit) through a common header.

ii. An uninterruptible water supply is required and shall be connected to the 1/4" compression fitting on the drain float. The water supply maintains a water level in the drain kit to prevent the flue gas from entering the boiler room through the condensate connection. The 1 1/2" connection shall be piped to an appropriate drain for disposal. If the water supply must be temporarily disconnected, the boiler(s) must be turned off to prevent accidental flue gas emission into the boiler room.

iii. The cover should be kept on at all times, except during maintenance of the drain. This drain should be monitored and checked regularly in your Reliance maintenance schedule.

Model Part Number	4-57-000440
Recommended Operating Temp.	175°F max.
Capacity	4 QT
Inlet Size	1"
Outlet Size	1 ½"
Water Supply (100 psi max.)	¼" COMP.
Max. Btu's input per drain kit	12 MMBtu

iv. **Installing Condensate Drain Piping (Figure 12b)**

1. A condensate collecting tank and condensate pump will be required if a floor drain is not available to discharge to (Collecting tank and pump are not supplied with the boiler). Complete condensate drain kits are available from Fulton.
    a. It is recommended that all condensate piping be galvanized or stainless steel and should be free of leaks.
    b. High temperature silicone tubing (500° F) can be used on the outlet of the boiler to the header.
    c. CPVC and copper are acceptable for the common header only.
    d. Install the condensate piping to the condensate drain in the lower left hand side of the boiler.
    e. Connect 3/4" condensate drain(s) to the 1" header connected in a manifold as shown in Figure 12b. The header must be at least 5 1/2" below the condensate outlet of the individual boiler and must remain flooded by being at least 5 ½" below the outlet of the condensate drain trap.

f. Connect 1 1/2" drain outlet to an appropriate waste line following applicable codes. The 11/2" drain connection on the condensate drain must be the highest point prior to going to the drain. Failure to keep drain piping lower than this point will result in overflow of the condensate drain. Slope the drain pipe away at a minimum pitch of 1" for every 12 feet.

g. Attach a 1/4" water supply to the compression fitting on the float. The water line must be connected to an uninterruptible supply. Fulton recommends connecting it before the "Fast-Fill" valve to the boiler supply but after the back flow preventer to avoid contamination of a potable water supply. Maximum allowable water pressure to the compression fitting is 100 PSI.

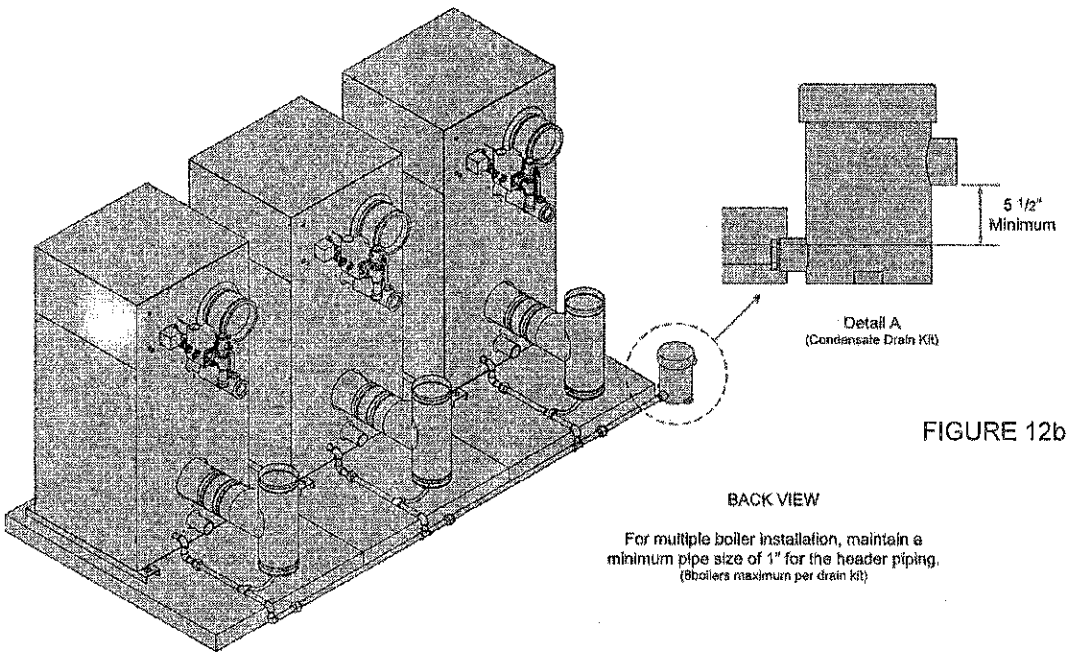

FIGURE 12b

m. **Sizing Exhaust Vent**

i. Exhaust vents must be sized to ensure less than a 0.5"wc pressure drop between the air intake and flue exhaust venting. This is the equivalent of 70 feet and 8 elbows (combining the distances between the intake and the exhaust pipes).

n. **Venting Terminations**

i. All vent pipes and fittings must be installed with appropriate air space clearances to combustibles. These air space clearances apply to indoor or

outdoor vents—whether they are open, enclosed, horizontal or vertical or pass through floors, walls, roofs, or framed spaces. The air space clearances should be observed to joists, studs, subfloors, plywood, drywall or plaster enclosures, insulating sheathing, rafters, roofing, and any other material classed as combustible.

ii. The required minimum air space clearances also apply to electrical wires and any kind of building insulation.

iii. Adequate provision must be made to support the weight of the exhaust venting. It cannot be supported by the boiler exhaust connection.

iv. Listed termination parts must be used.

FIGURE 13

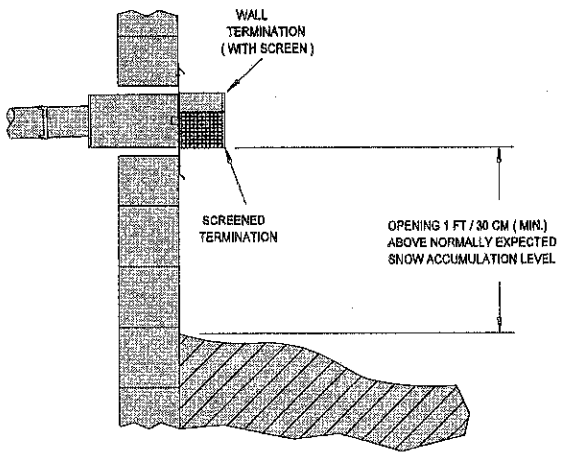

AIR INTAKE AND EXHAUST TERMINATION SHOULD BE SEPERATED AS FAR AS POSSIBLE TO PREVENT FLUE GAS RECIRCULATION DURING DIFFERENT WIND CONDITIONS

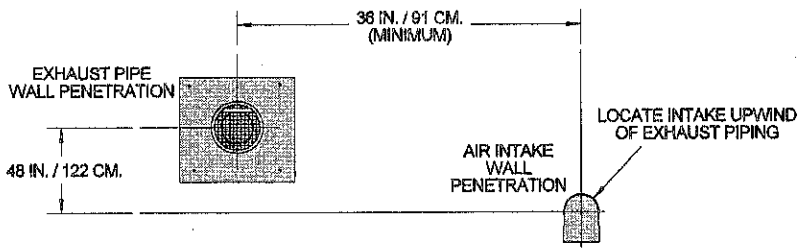

FIGURE 14

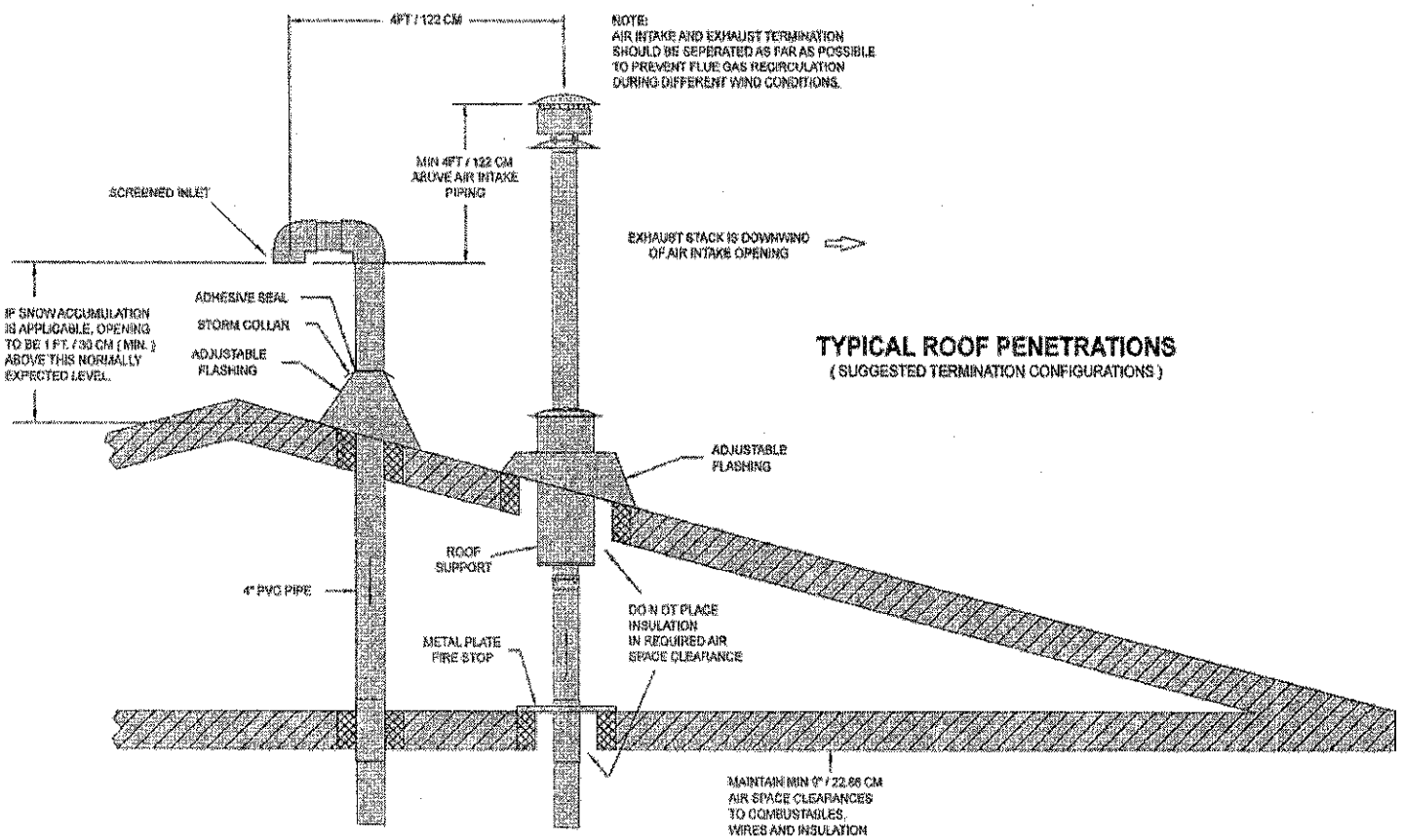
4FT / 122 CM
NOTE:
AIR INTAKE AND EXHAUST TERMINATION SHOULD BE SEPERATED AS FAR AS POSSIBLE TO PREVENT FLUE GAS RECIRCULATION DURING DIFFERENT WIND CONDITIONS.
MIN 4FT / 122 CM ABOVE AIR INTAKE PIPING
SCREENED INLET
EXHAUST STACK IS DOWNWIND OF AIR INTAKE OPENING
IF SNOW ACCUMULATION IS APPLICABLE, OPENING TO BE 1 FT. / 30 CM (MIN.) ABOVE THIS NORMALLY EXPECTED LEVEL.
ADHESIVE SEAL
STORM COLLAR
ADJUSTABLE FLASHING
TYPICAL ROOF PENETRATIONS
(SUGGESTED TERMINATION CONFIGURATIONS)
ADJUSTABLE FLASHING
ROOF SUPPORT
4" PVC PIPE
DO N OT PLACE INSULATION IN REQUIRED AIR SPACE CLEARANCE
METAL PLATE FIRE STOP
MAINTAIN MIN 9" / 22.86 CM AIR SPACE CLEARANCES TO COMBUSTIBLES, WIRES AND INSULATION

v. Select the air intake point of penetration where a minimum of 1/4" per foot upward pitch can be maintained.

vi. When penetrating a non-combustible wall, the hole through the wall must be large enough to maintain the pitch of the vent and provide sealing. Use adhesive material to seal around the vent on both sides of the wall. When penetrating a combustible wall, a wall thimble must be used. See Figure X for installation instructions. Minimum wall thickness through which vent system may be installed is 3.25". Maximum wall thickness through which vent system may be installed is 20 inches.

o. **Wall Thimble Installation**

FIGURE 15

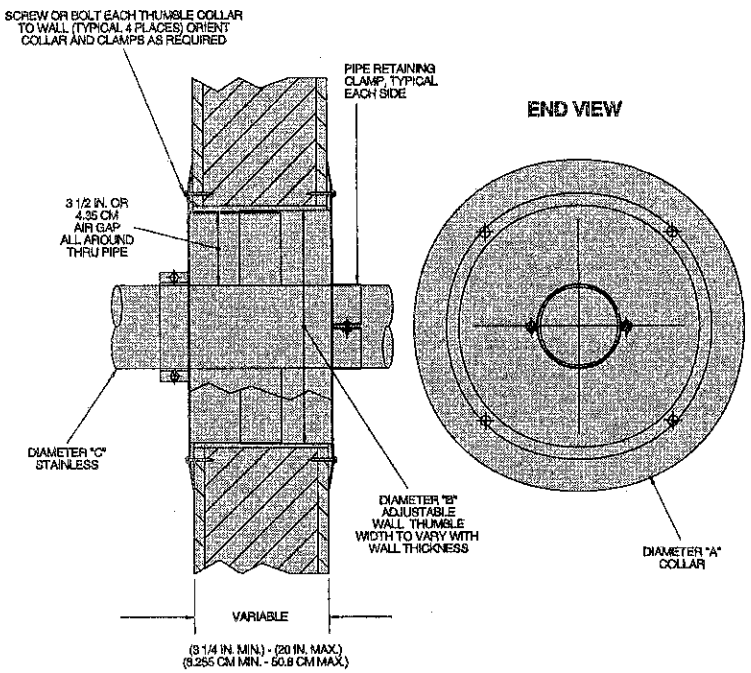

i. The thimble is inserted through the wall from the outside. Secure the outside flange to the wall with nails or screws, and seal with adhesive material. Install the inside flange to the inside wall, secure with nails or screws, and seal with adhesive material. Pass the vent pipe through the thimble from the outside and join to the rest of the vent system. Seal the pipe to the thimble flange with adhesive material. Install two pipe retaining clamps around the intake as well as vent pipes on both ends of the wall thimble (on the inside and outside of the wall) through which intake and vent pipes are passed. They will prevent the intake and vent pipes from being pushed or pulled.

p. **Horizontal Vent Termination**

i. The vent termination is joined to the vent pipe outside the wall. Use the same joining procedures for vent pipe and fittings. The termination of the vent system must be at least 12" above the finished grade, or at least 12" above normal snow accumulation level (for applicable geographical areas). The termination of the vent system shall not be located in traffic areas such as walk ways, adjacent buildings, operable windows and building openings unless the venting system is at least 7ft. above finished grade, (National Fuel Gas Code, ANSI Z223.1). The vent terminations must be at least 4 feet (1.22m) horizontally from electric meters, gas meters, regulators, and relief equipment.

ii. When installing inlet and exhaust terminations on the same wall, the exhaust outlet must be installed 3 ft. minimum above and downwind from air supply inlet to prevent exhaust recirculation. Under certain wind conditions, some building materials may be affected by flue products expelled in close proximity to unprotected surfaces. Sealing or shielding of the exposed surfaces with a corrosion resistant material (such as an aluminum sheet) may be required to prevent staining or deterioration.

iii. Do not locate the vent termination too close to shrubbery as flue products may stunt their growth or kill them.

iv. The minimum vent height should extend at least 3 feet above the roof, or at least 2 feet above the highest part of any structure within 10 feet of the vent.

v. If the exhaust vent terminates within 10 ft. horizontally of the air inlet, the exhaust vent must be at least 4 ft. above the inlet. Dimensions listed above and those illustrated are minimum, and may or may not be sufficient for conditions at a specific job site.

vi. To prevent the possible re-circulation of flue gases, the vent designer must take into consideration such things as prevailing winds, eddy zones, building configurations, etc. FHS cannot be responsible for the effects such adverse conditions may have on the operation of the boilers. It is important to locate the exhaust duct in such a way that it does not become blocked due to snow, ice, and other natural or man-made obstructions.

q. **Common Exhaust Venting of Multiple Boilers**

i. Common venting of multiple Reliance boilers is permitted on a case by case basis. A variable speed exhaust fan may be required. Please contact your venting manufacturer for proper vent size and arrangement.

ii. Reliance boilers cannot be common vented with other equipment.

iii. **WARNING**: Never install a barometric damper on flue systems designed with positive pressure.

16. **ELECTRICAL CONNECTIONS**

a. Install wiring and ground in boiler in accordance with authority having jurisdiction or in absence of such requirements National Electrical Code, ANSI/NFPA 70.

b. This boiler requires an independent 120V 60Hz single phase connection. Connect power to the terminal strip as supplied on the inside cover of the panel box.

c. **CAUTION:** Assure all electrical connections are powered down prior to attempting replacement or service of electrical components or connections of the boiler.

d. **NOTE:** Connect a ground wire to green colored ground lug in electrical control box.

FIGURE 16

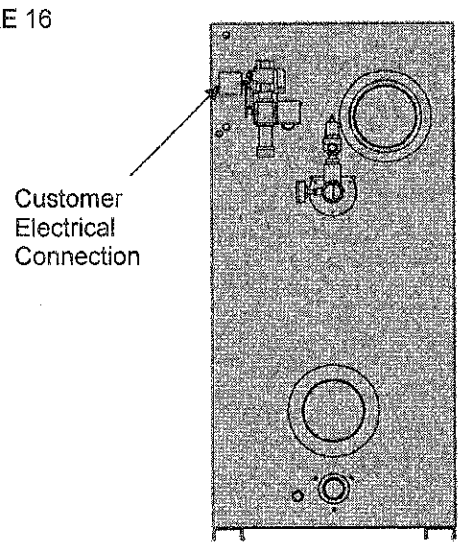

WIRING DIAGRAM – FIGURE 17

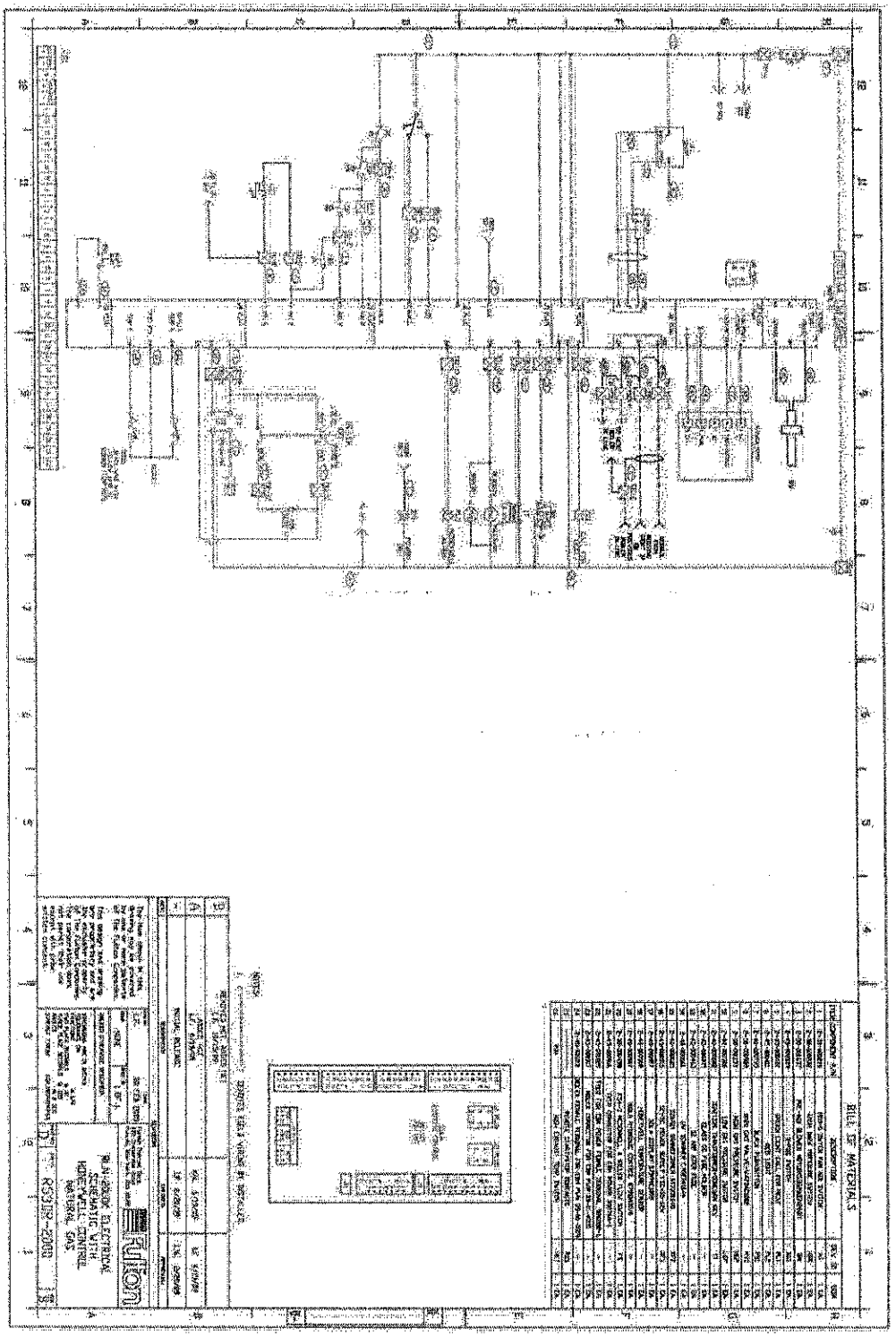

SOLA CONTROL PIN OUT DIAGRAM – FIGURE 17A

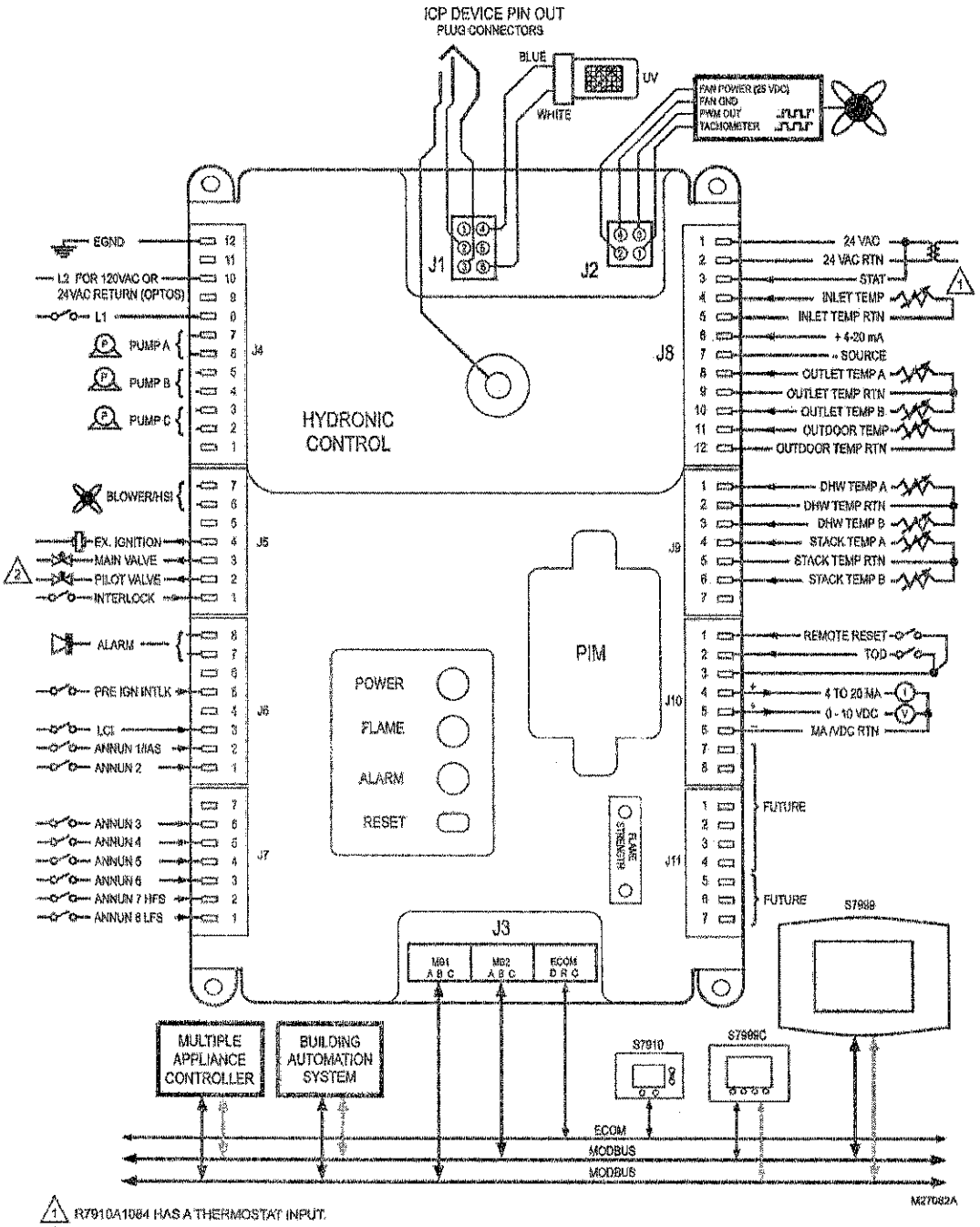

1 R7910A1084 HAS A THERMOSTAT INPUT.

2 FOR DIRECT BURNER IGNITION (DBI) THE MAIN VALVE GETS CONNECTED TO J5 TERMINAL 2.

Section 3

Section 3 – Operation

1. **AFTER INSTALLATION & PRIOR TO START UP**
    a. **NOTE**: Read these instructions and save for reference.
    b. **NOTE:** Post these instructions in an appropriate place near the boiler and maintain in good legible condition.
    c. **WARNING:** If you do not follow these instructions exactly, a fire or explosion may result causing property damage, personal injury, or loss of life.
    d. BEFORE OPERATING, smell all around the boiler area for gas. Be sure to smell next to the floor, as some gas is heavier than air and will settle.
    e. PLEASE REVIEW THE TEXT BOX BELOW:

WARNING: If the information in this manual is not followed exactly, a fire or explosion may result causing property damage, personal injury or loss of life.

-Do not store or use gasoline or other flammable vapors and liquids in the vicinity of this or any other appliances.
-WHAT TO DO IF YOU SMELL GAS
• Do not try to light any appliance.
• Do not touch any electrical switch; do not use any phone in your building.
• Immediately call your gas supplier from a neighbor's phone.
Follow the gas supplier's instructions.
• If you cannot reach your gas supplier, call the fire department.
-A qualified installer, service agency or the gas supplier, must perform installation and service.

    f. Use only your hand to turn the valve handle. Never use tools. If the knob will not turn by hand, don't try to repair it. Call a qualified service technician. FORCE OR ATTEMPTED REPAIR MAY RESULT IN A FIRE OR EXPLOSION.
    g. **NOTE:** DO NOT use this boiler if any part has been under water. Immediately call a qualified service technician to inspect the boiler and to replace any part of the control system and/or gas control(s), which has been under water.
2. **BEFORE OPERATING YOUR RELIANCE BOILER:**
    a. **Make sure you have read and followed all previous safety information.**
    b. ENSURE THE FOLLOWING:
        i. The boiler is located with the proper clearances as shown in this manual.
        ii. Relief valves have been properly piped to floor drains.
        iii. Flue gas from the boiler is properly vented.
        iv. The water system has been flushed and is free of debris.
        v. Combustion air openings are not obstructed in any way and have adequate capacity.

vi. There are no flammable liquids, materials or hazardous fumes present in the environment.

vii. Nothing was damaged or knocked loose during shipment. Inspect the main gas train and trim assembly to be sure they were not damaged during shipment or installation.

c. **NOTE** This boiler is equipped with an ignition device, which automatically lights the burner. Do not try to light the burner by hand.

d. **WARNING:** Do not attempt to start the boiler for any testing before filling and purging the boiler. A dry fire will seriously damage the boiler and may result in property damage or personnel injury and is not covered by warranty.

e. Completely fill and purge the heating system using the following sample procedure:

i. Close combination shutoff/purge valve in supply, all drain cocks, the shutoff valve for the pressure reducing (fill) valve, and all manual air vents.

ii. Open all other system shutoff valves and one of the zone valves, the vent on the combination shutoff/purge valve and the shutoff valve to the pressure-reducing (fill) valve.

iii. Water will now begin to fill the system. Air will escape through the vent on the combination shutoff/ purge valve. Continue filling until a constant stream of water (no bubbling) is discharged from the vent.

iv. Close the zone valve on the purged loop, and open the zone valve on the next loop to be purged. When all air has escaped and only water is discharged, close the zone valve. When all zones have been purged (one at a time), close the vent on the combination shutoff/purge valve.

v. At this point, the system has been initially filled. However, air pockets may still remain at high points in the system and in heating loops above the level of the combination shut/off purge valve. It is quite possible, depending on the particular system that all piping above the combination shutoff/purge valve still contains air. If manual vents are installed on the system high points, these should be opened to vent these locations. When only water is discharged from all vents, the initial purging is complete.

vi. Open the combination shutoff/ purge valve (keep the vent closed). With the gas shutoff valve closed, turn on power to the boiler and operate the circulator. Circulate the system water for approximately 30 minutes to move all air to the automatic air separation point.

vii. Again, open manual air vents at high points of heating loop until a constant stream of water is discharged from the vent. Close the vent and make sure it's watertight. Repeat procedure for all high points and for every zone.

f. **CAUTION**: Never leave an opened manual air vent unattended. In the event an opened vent is left unattended, water damage could occur.

g. Check temperature/pressure indicator reading, which should equal the pressure-reducing (fill) valve set pressure. No more water should be entering the system. Close the shutoff valve on the cold-water fill line.

h. Visually inspect all pipe joints and equipment connections for leaks. If necessary, drain system, repair leaks and refill/purge the system. If no pressure drop is detected for a period of two hours under pressure, the system may be considered watertight.

i. When purging is completed, make sure the following are open---combination shut-off/purge valve, shutoff valve to pressure reducing (fill valve), shutoff valve in cold water fill line, and shutoff valve in return line.

j. Make sure the following are closed--all drain cocks, the vent on the combination shutoff purge valve, & all manual vents. Reset zone valves to normal mode of operation and turn off power to boiler.

k. Open fuel shutoff valve, allowing fuel to flow to boiler.

3. **SETTING THE SOLA CONTROL**

   a. The SOLA control within the Reliance boiler has been factory programmed. It should be unnecessary to alter any of the preset program.

   b. CAUTION: Do not attempt to alter any password protected preset values unless you are factory trained personnel.

4. **COMMISSIONING/START-UP**

   a. **WARNING:** Before commissioning the boiler, verify with authorized personnel that the gas lines have been purged.

   b. **SAFETY CHECKS:** The following checks of safety systems must be made before putting the boiler into normal operation:

      i. Before firing the boiler familiarize yourself on the use of the controls, lighting, and shutdown procedures.

      ii. **WARNING:** Never attempt to operate a boiler that has failed to pass all the safety checks described below.

      iii. **WARNING:** After checking controls by manual adjustment, make sure they are always reset to their proper settings

5. **TEST OF IGNITION SAFETY SYSTEM**
    a. Test the ignition system safety shutoff as follows:
        i. Remove the black plug/connector from the main gas valve (it is held on with a central screw).
        ii. With the main gas cock (inlet manual gas valve) open, the burner should be cycled on. After all the safety limits such as gas pressure, water flow and temperature are satisfied, the blower will run and pre-purge the boiler.
        iii. Once the purge is complete (30 seconds), the ignition transformer will be energized. There will be a 4 second trial for ignition period. During this period, indicator lights on the flame safeguard (pilot and main)
        iv. The main gas valve will not open because there is no power to the valve due to the disconnected wires. Hence, no flame will be established and the flame safeguard will not receive a flame signal from the UV scanner.
        v. After 4 seconds, the flame safeguard programmer will assume a "Flame Failure" condition and go through one more cycle before going into a "lockout" mode. Lockout will require manual reset of the flame safeguard.
        vi. After completing this test, turn off the boiler and reconnect the wires to the main gas valve.
6. **TEST OF LOW WATER FLOW CUT OFF**
    a. The boiler is furnished with a flow-switch-type low water cut-off in the outlet nozzle. Test as follows:
        i. Turn boiler and then system pump off.
        ii. Turn boiler back on.
        iii. "Hold 63 LCI Off" will annunciate after a call for heat from the temperature control. The boiler should not start until the pump is started.
        iv. Perform appropriate tests on any external probe-type low water cut-off.
7. **TEST OF HIGH LIMIT CONTROLS**
    a. Fire the boiler and test the high limit control as follows:
        i. Access the configure screen of the SOLA control.
        ii. Alter high temperature limit to a value lower than the anticipated loop temperature. Turn the boiler on. Water temperature will rise until the boiler locks out. This condition has to be manually reset. Alter the high limit cut off temperature to normal level, typically 10-20 degrees above set point.
8. **TEST OF LOW GAS PRESSURE SWITCH**
    a. With the boiler running turn down the low gas pressure switch until a lock out is annunciated. Reset the switch to normal level, re-start the boiler.

9. **TEST OF HIGH GAS PRESSURE SWITCH**
    a. Closing the downstream main gas cock, and starting the boiler must check the operation of this switch. Once the trial for ignition period is reached, the main gas valve will open, pressurizing the line. This will trip the high gas pressure switch. The high gas pressure switch must be manually reset after it trips.
10. **TEST OF AIR SWITCH**
    a. Fire the boiler and test the air switch as follows:
        i. At low fire turn the adjustment on the switch clockwise until the switch trips and the boiler shuts down.
        ii. Back out the adjustment to previous position.
11. **TEST OF HIGH BACK PRESSURE SWITCH**
    a. Fire the boiler and test the high back pressure switch as follows:
        i. At high fire turn the adjustment on the switch counter clockwise until it opens and the boiler shuts down.
        ii. Turn the adjustment in two turns.
12. **NORMAL OPERATION**
    a. Under normal operating circumstances, this boiler functions as a fully automatic appliance. The automatic control senses the water outlet temperature and fires the boiler when heat is needed by the system. Additionally this boiler may function as part of an integrated building management system.
    b. Outlet water temperature, fan speed and set point are displayed on the SOLA touch screen display on the front of the boiler. Figure 18 below shows a sample screen display on the SOLA control.

FIGURE 18

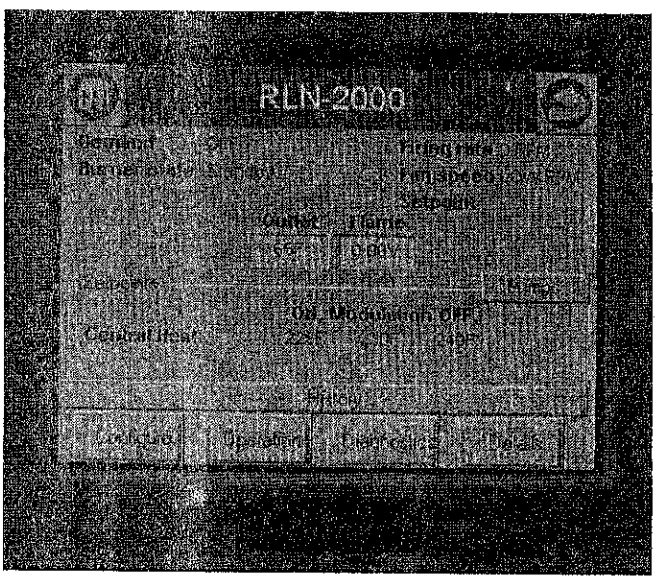

13. **CHANGING THE OPERATING SET POINT**

a. From the main screen do the following:

1. Tap "**Configure**"
2. Tap "**Central Heat Configuration**"
3. Tap "**CH Set Point**"
4. Tap "**Clear**"
5. Enter New Set Point
6. Tap "**OK**"
7. Tap the escape arrow in top right hand corner

14. **SETTING COMBUSTION**

a. You will need:

i. Calibrated combustion analyzer

ii. Manometer to measure inlet gas pressure

iii. Read through this section entirely before starting this procedure.

b. From home screen tap "Operation."

i. Next tap the yellow background "rpm" box next to firing rate.

ii. Under "Firing Rate Control" tap "Manual in Run." Refer to Figure 19.

iii. Using test fire sheet enter the light off rpm's in the "Manual Firing Rate" box.

iv. Once the rpm's are entered tap "OK", then return to the home screen.

c. Turn the local/off/remote switch to the local position.

d. Once burner has started and you have verified flame signal return to the "Manual Firing Rate" box by following step b. from above.

e. Increase the firing rate in 500 rpm increments until you reach the high fire rpm's from the factory test fire sheet.

i. At each point check combustion.

ii. CO_2/CO should remain constant throughout firing range.

iii. Monitor inlet gas pressure combustion.

f. Once the high fire rpm setting is reached make fine tuning adjustments on the gas ratio valve "flow rate" to match factory test fire settings. The "flow rate" adjustment requires a 3mm hex wrench.

i. Turning the screw counterclockwise increases gas flow, clockwise decreases gas flow.

g. **NOTE – COMBUSTION CHANGES ARE MADE AT HIGH AND LOW FIRE ONLY AS THE GAS RATIO VALVE HAS A 1:1 RATIO.**

h. Manually decrease the firing rate by 500 rpm increments observing combustion down to the low fire rpm setting (minimum) on the factory test fire sheet. If required low fire combustion may be altered by adjusting the offset adjustment screw with either a Torx®T40 or a 5mm hex wrench.

i. Turning the screw counterclockwise decreases gas flow, clockwise increases gas flow.

i. Before leaving the "Firing Rate" screen, tap "Automatic" firing rate control. Do not leave the unit in the "Manual in Run" mode.

FIGURE 19

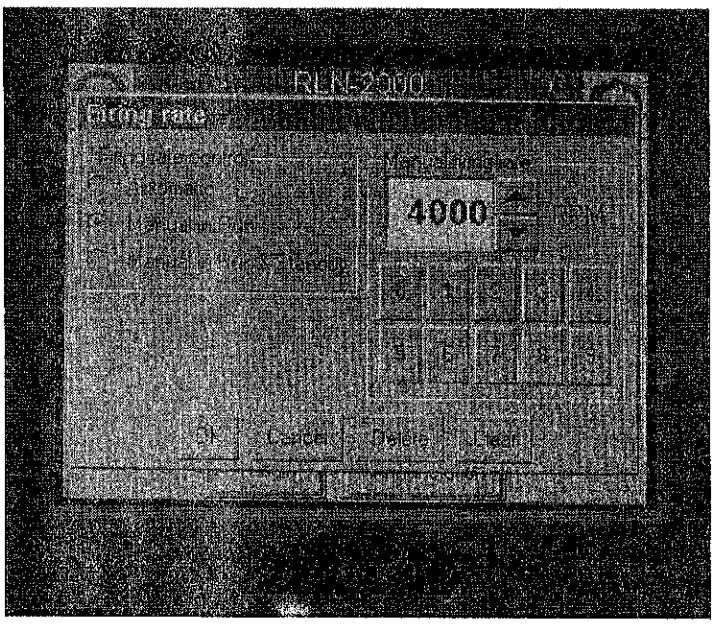

15. **SHUT-DOWN PROCEDURES**

a. **Normal Shut Off Procedures**

i. Place the local/off/remote switch in the off position.

ii. Close all manual gas valves.

iii. Turn off electrical power.

b. **Emergency Shut Off Procedures**

i. The main gas cock should be closed immediately. If overheating occurs or the gas supply fails to shut off, do not turn off or disconnect the electrical supply to the pump. Instead, shut off the gas supply at a location external to the boiler.

c. **Shutting the Boiler Down for an Extended Period of Time**

i. If the boiler is to be shut off for a period greater than 3 months:

1. Perform normal shut down procedure
2. Isolate water supply and flow circuit from boiler
3. Drain boiler
4. Disconnect electrical supply

d. **Starting Boiler After Prolonged Shutdown**

i. Perform initial start up procedures as described in this manual.

FIGURE 20

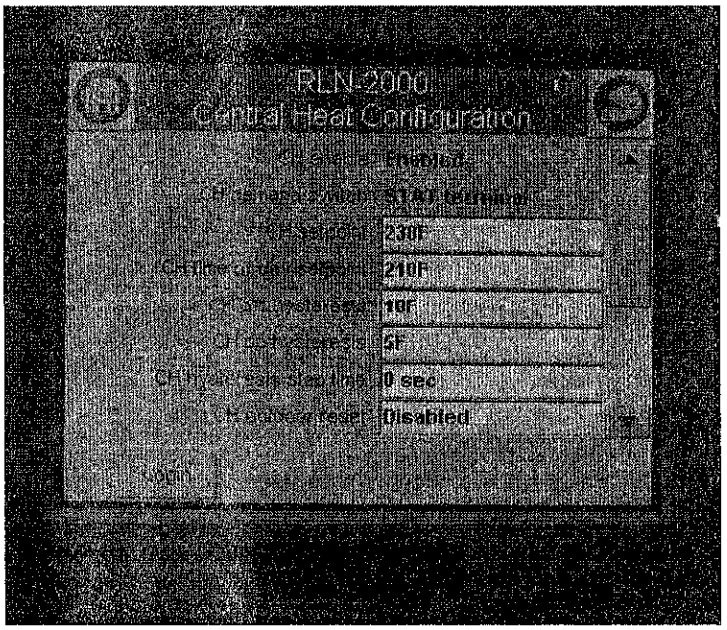

FIGURE 21

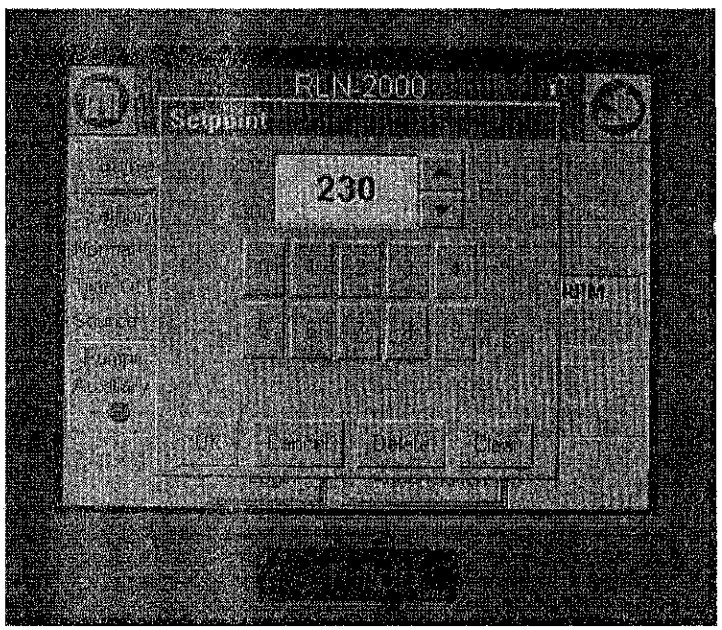

16. **Displayed on Home Screen & In Details**
    a. The flame signal can be viewed from the main/home screen or in main screen "details."
        i. Tap "Details" in main screen then scroll to right by pressing the arrow until the "Flame Detection" is displayed.

ii. Tap the escape arrow in top right hand corner to return to main operating screen

FIGURE 22

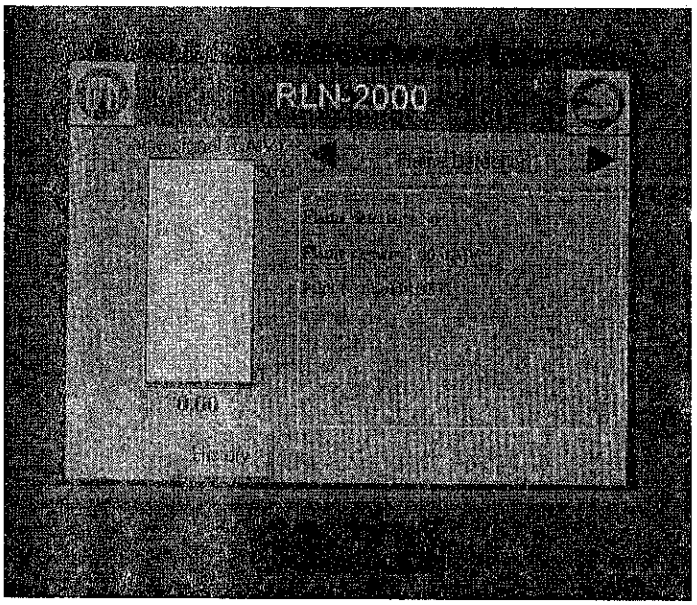

17. **Additional Features of the SOLA Control**

a. Home Screen / Burner Status (FIGURE 23)

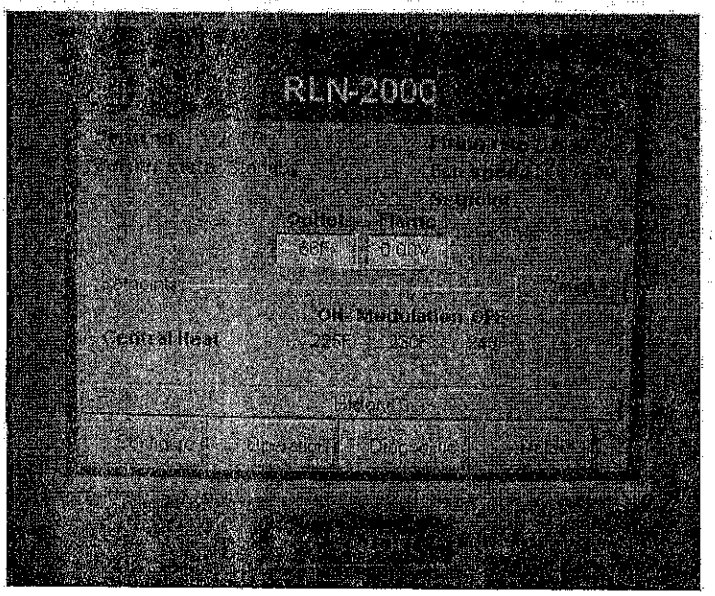

b. Cycle and Run Hours Monitoring (FIGURE 24)

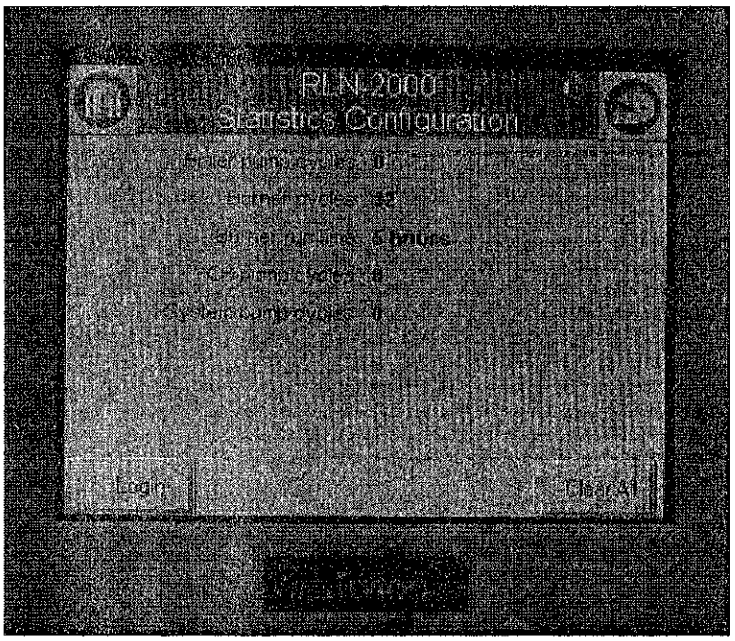

c. Boiler Naming (FIGURE 25)

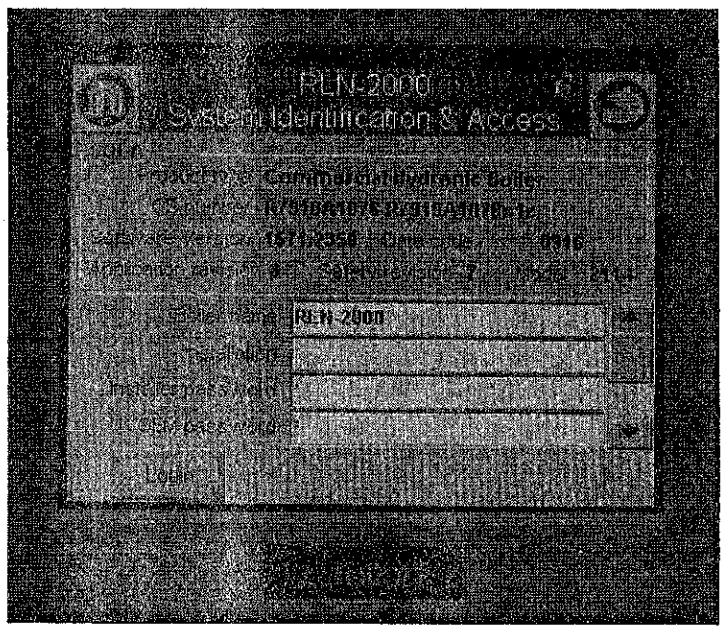

d. Pump Configuration (FIGURE 26)

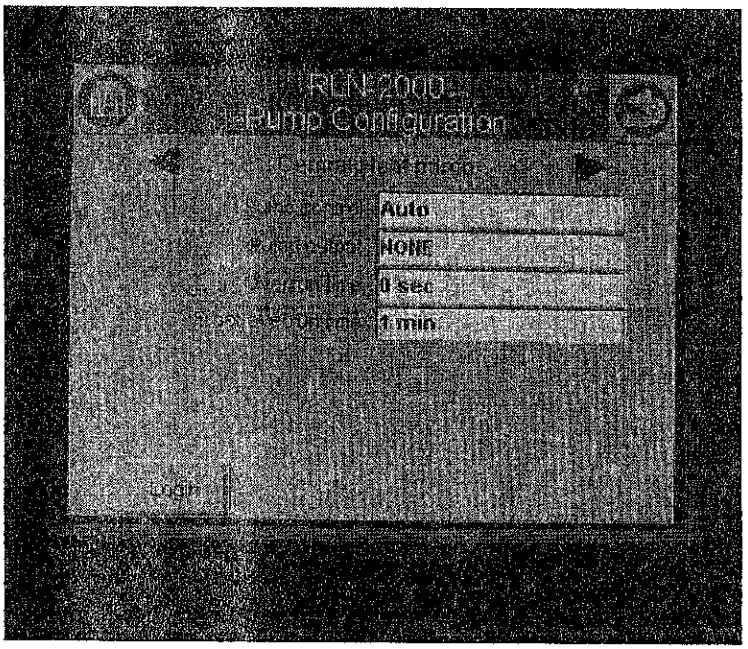

e. Flow Switch Configuration (FIGURE 27)

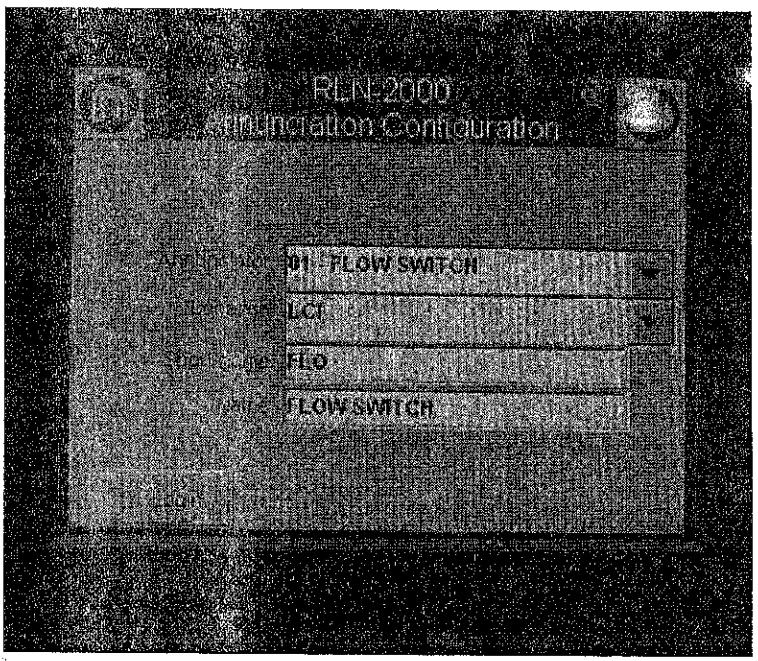

Section 4

Section 4 – Maintenance

1. GENERAL
    a. **WARNING**: Installation and service must be performed by a qualified and knowledgeable individual, such as a Fulton Heating Solutions representative, qualified installer, service agency or gas supplier. Any potential warranty issues that arise after an unqualified individual has manipulated boiler parameters will not be considered.
    b. **WARNING**: Proper lockout / tagout procedures must be employed when servicing this unit.
    c. Hazard analysis should be performed by end user to insure safety of their employees and/or service technicians.
    d. Qualified and knowledgeable personnel should perform all weekly, monthly and annual maintenance checks.
    e. WARNING: Label all wires prior to disconnection when servicing controls. Wiring errors can cause improper and dangerous operation.
    f. Verify proper operation after servicing.
2. **DAILY MAINTENANCE AND INSPECTION SCHEDULE**
    a. Observe operating temperature and general conditions. Make sure that the flow of combustion and ventilating air to the boiler is not obstructed.
    b. **WARNING**: Check daily to that the boiler area is free and clear of any combustible materials, including flammable vapors and liquids.
3. **WEEKLY MAINTENANCE AND INSPECTION SCHEDULE**
    a. Observe the conditions of the main flame. A normal high fire flame shows an orange screen with a blue halo. In Low fire the burner should display a reddish orange glow.
    b. Correct air adjustment is essential for the efficient operation of this boiler. If an adjustment to the combustion is necessary, the flue gas composition should be checked with a carbon dioxide (CO_2) or oxygen (O_2) analyzer to set conditions.
4. **MONTHLY MAINTENANCE AND INSPECTION SCHEDULE**
    a. View flame detection strength via the SOLA control.
    b. Test high-limit control by reducing setting below the operating temperature. Burner should shut off. Return high limit to previous setting.
    c. Test operating temperature control by reducing temperature setting as necessary to check burner operation.
    d. Check flue gas temperature at outlet. If there is a temperature increase over previous readings, the probable cause is soot or water-scale build-up on the tubes. Consult Fulton Heating Solutions immediately if there is a concern.
    e. Test the water flow switch by trying to restart boiler with the system pump off. The boiler should not operate and the red water flow indicator should light.

f. Test low gas pressure switch and high gas pressure switch utilizing the procedure in operation section.

g. If an air inlet filter is included with the boiler inspect and clean the inlet filter of any accumulated dust or lint.

   i. PROCEDURE FOR CLEANING THE AIR INLET FILTER

      1. Remove the filter. The filter sits in a custom slot on the air inlet connection to the boiler (inside the upper cabinet).
      2. Remove all debris and dirt from the filter using a non-corrosive soap and water.
      3. Return the filter to its original position in the slot.
      4. Any damage to the burner or any other aspect of the boiler because of an air filter that was not cleaned and maintained regularly will void the warranty on the Reliance boiler.

FIGURE 28 – AIR INLET FILTER BRACKET

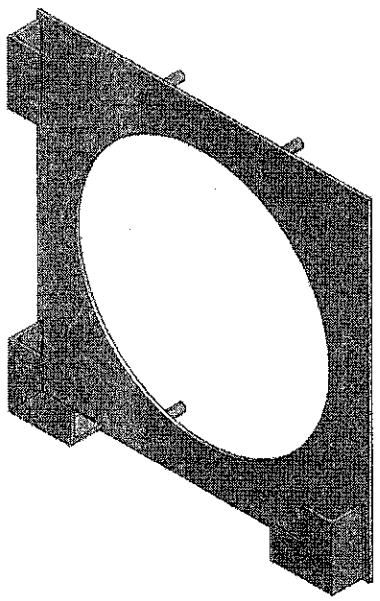

h. The relief valve should be tested as per manufacturers' instructions or every two months by lifting the lever for 5 seconds and allowing the valve to snap shut. Please see the manufacturer's recommendations on the relief valve tag.

5. **ANNUALLY/PRIOR TO EACH HEATING SEASON**

   a. In addition to the recommended monthly service:

      i. Inspect the burner and wipe off and/or use low pressure air (do not scrub or use wire brush) to remove any soot or foreign material that may have accumulated. If there is evidence of deterioration or corrosion, replace

immediately. Refer to Step 6 in this manual for cleaning and burner removal procedures. The burner must be removed to perform a thorough inspection and cleaning.

ii. Replace the ignition assembly annually/prior to each heating season. Contact your Fulton representative to purchase replacement ignition assemblies.

iii. **NOTE: THE BURNER MUST BE REMOVED WHENEVER REPLACING THE IGNITION ASSEMBLY. PLEASE REFER TO STEP 6 FOR BURNER REMOVAL.**

FIGURE 29 – BURNER WITH IGNITION ASSEMBLY MOUNTED

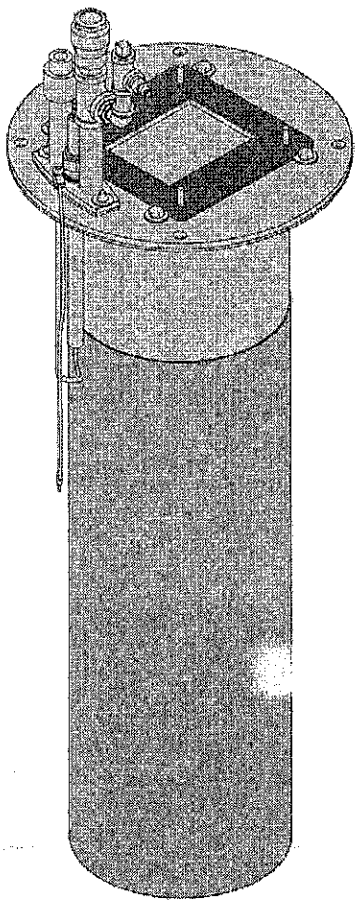

iv. Inspect heat exchanger copper finned tubes. To access copper finned tubes for inspection, open the front lower door. Remove the two vertical rails and the upper and lower bands. Now the front third of the inner jacket of the heat exchanger may be removed.

v. Note any signs of deterioration. Examine the gasket and replace if necessary, using Fulton numbered gasket kit only.

vi. Inspect the copper finned tubes. If cleaning is necessary, remove the burner/blower assembly prior to washing the copper finned tubes with water and non-corrosive soap. Refer to Step 6 for removal of the burner assembly.

vii. Green scale on the tubes indicates that the boiler is or has been condensing; this is detrimental to the life of a copper finned tube heat exchanger. Perform corrective action as necessary. This condensation may be the result of an improperly designed system or a failed system component. The Reliance is susceptible to this failure when there are system return water temperatures below 140 degrees F present. Inspect for any presence of leaking or failed tubes. A replacement heat exchanger may be necessary.

viii. Examine the venting system.

1. Check all joints and pipe connections for tightness.
2. Check vent for corrosion or deterioration. If any venting needs replacing, do so immediately.
3. Perform any recommended maintenance as required by the vent material manufacturer.

ix. Inspect heating system for other problems.

x. Perform combustion analysis and adjust if necessary

xi. Leak test gas valves.

1. Leak Test must be performed only by qualified personnel, who have been trained in this procedure in a Fulton Service School.

6. **PROCEDURE FOR REMOVAL/CLEANING THE BURNER**

a. **WARNING**: Follow proper lockout / tag out procedures for the electrical, gas and water connections. Use caution when lifting heavy parts.

b. Remove top and side panels form the boiler outer jacket.

c. Disconnect both wire plug connectors to the pre-mix blower.

d. Disconnect the UV scanner/flame rod, ignition wire and ground wire block.

e. Disconnect air sensing tubing from Venturi mixing unit, carefully swing the tubing away.

f. Disconnect air switch sensing tubing between switch and Venturi mixing unit inlet.

g. Disconnect high backpressure sensing tubing between switch and ignition assembly connection point.

h. Disconnect the four bolts between the Venturi mixing unit flange and the gas train flange. **CAUTION: verify the gas train is properly supported prior to removing the above mention four bolts, also verify supply gas is isolated**. Inspect gasket located between these two flanges for signs of deterioration.

i. Undo 4 nuts holding pre-mix blower to the burner/blower mounting plate. Use care, the pre-mix blower/venturi-mixing unit is heavy. Inspect gasket for signs of deterioration.
j. Undo 4 nuts holding burner/blower-mounting plate to the outlet water header.
k. Remove burner, being careful not to scrape burner on heat exchanger or outlet water header. Inspect gasket for signs of deterioration.
l. Inspect burner and wipe off (do not scrub or use wire brush) any soot or foreign material that may have accumulated. If available, use compressed air to clear the burner. Wipe out the inside of the burner with a clean cloth.
m. Check that the gap between the electrode and the ground rod. Gap should be 1/8-inch (3mm) +/- 1/16,-0. For Liquid Propane, the gap should be exactly 1/8-inch (3mm).
n. **IMPORTANT STEP**: Check the horizontal gap between the point of ignition and the exterior of the mesh burner. The required gap is 5/16-3/8-inch (8-10mm).
o. **IMPORTANT STEP**: If a flame rod is being utilized, check horizontal gap between the tip of the flame rod and the exterior of the mesh burner. The required gap is 3/16-1/4-inch (5-6mm).
p. To inspect the gasket between burner/blower mounting plate and mesh burner undo the 4 bolts.
q. Check for cracking of the electrode insulator. Do not over tighten the electrode.
r. Use a soft, clean cloth to remove accumulated contaminants from the UV detector/scanner glass envelope.
s. Use a soft, clean cloth to remove accumulated contaminants from the sight glass.
t. Before re-installing the burner, check the cleanliness of the heat exchanger and the condition of the combustion chamber. If corrosion or leaks are noticed, contact Fulton Heating Solutions.
u. Reverse removal steps for reinstallation of the burner assembly.
v. Reinstall side and top jacket panels.
w. Test fire the boiler and use a combustion analyzer to ensure that the fuel/air ratio is set correctly throughout the range. Refer to the Fulton Heating Solutions factory test fire report for combustion settings.

7. **AFTER ALL REPAIRS OR MAINTENANCE**
   a. Follow "Pre-Start Check List" and all "Safety Checks".
   b. Fire the boiler and perform combustion safety checks.
   c. Analyze combustion throughout the range and verify proper operation of safety devices.

8. **TROUBLESHOOTING**
    a. **WARNING**: If any "Manual Reset" limit device trips, **DO NOT** reset without determining and correcting the cause. (Manual Reset Limits include: Flame safeguard, high or low gas pressure, high temperature limit)
9. **POWER OUTAGE**
    a. When powered back up, the boiler will restart unless it was in a lockout condition before the power went out.
10. **FLOW REQUIREMENT**
    a. The Reliance boiler requires a minimum flow of the heat transfer medium to operate. The minimum flow requirement is published in this manual. When there is insufficient water flow the boiler will lock out from operation. When the required flow resumes, the boiler will resume operation.
11. **GAS PRESSURE**
    a. When the gas pressure alarm is annunciated and the boiler touch screen indicator is illuminated, there has been either insufficient gas pressure or the gas pressure to the manifold is too high for safe and proper operation of the boiler. This shuts down the burner.
    b. If a gas-supply shutoff valve is closed for any reason, a low gas condition will result.
    c. When gas pressure is restored, the annunciated alarm will remain on and the boiler will remain locked out until the gas pressure switch is manually reset.
    d. In the event of a high gas manifold pressure condition, a potential air gas ratio control failure. This must be corrected by qualified service personnel be-fore restarting the boiler.
    e. Once the switch is reset, the sequence returns to normal, provided that the other limits are satisfied.
12. **HIGH WATER TEMPERATURE**
    a. When the boiler water has exceeded both the operating and high-limit temperature, a high water temp alarm is annunciated. When the water temperature falls below the high-limit temperature, the boiler will remain locked out until the controller is manually reset. Once the Sola control is reset, the sequence returns to normal operation to await heat demand provided that the other limits are satisfied.
13. **LOW AIR FLOW SUPPLY**
    a. **CAUTION:** The air switch has been factory set and should not be adjusted in the field.
    b. Low Air is annunciated if the air flow switch detects low air flow through the boiler.
    c. An extended low air indication does not mean that the low air switch is defective.
    d. Check that blower is power and feedback plugs are clipped into the blower.
    e. Check that the burner is clean by observing through the venturi.

f. Check the blower purge speed and low fire speed is correctly displayed on the touch screen.

g. Check for obstructions in the vent.

h. Check for obstructions in the air inlet.

14. **VENT PRESSURE**

   a. In the event of the vent having too much pressure, the High Back Pressure Switch will trip and shut down the boiler. This condition will automatically recycle, so the boiler will try to relight. The vent and heat exchanger should be checked for obstructions and cleaned.

15. **IGNITION FAILURE**

   a. In the event the UV scanner/flame rod does not detect the flame during the 4-second trial-for-ignition period, the gas valve and spark ignition are de-energized. At this time a safety lockout occurs. This can be reset via the SOLA control.

16. **FLAME FAILURE**

   a. In the event of a main flame failure during a firing period, the main gas control valve is de-energized and the SOLA control goes into "lockout" mode. Flame failure occurs and the indicator is illuminated, the programmer must be manually reset.

Section 5

Section 5 – Parts and Warranty

Spare parts and replacement parts can be ordered from your local representative. Refer to the parts list. Factory direct replacement parts must be used to ensure that the boiler operates correctly.

WARNING! Use of Non-Factory-Authorized re-placement parts are not recommended for this equipment. All control components are engineered for safety and are designed to work in unison with each of the other components. Use of non-factory-authorized replacement parts would jeopardize the functionality of the safety features as well as the performance of the boiler. Use of non-Factory-Authorized part will void the warranty.

When ordering replacement parts please have the **model number** and **serial number** of your boiler available.

GENERAL PARTS DESCRIPTION OF THE RELIANCE BOILER

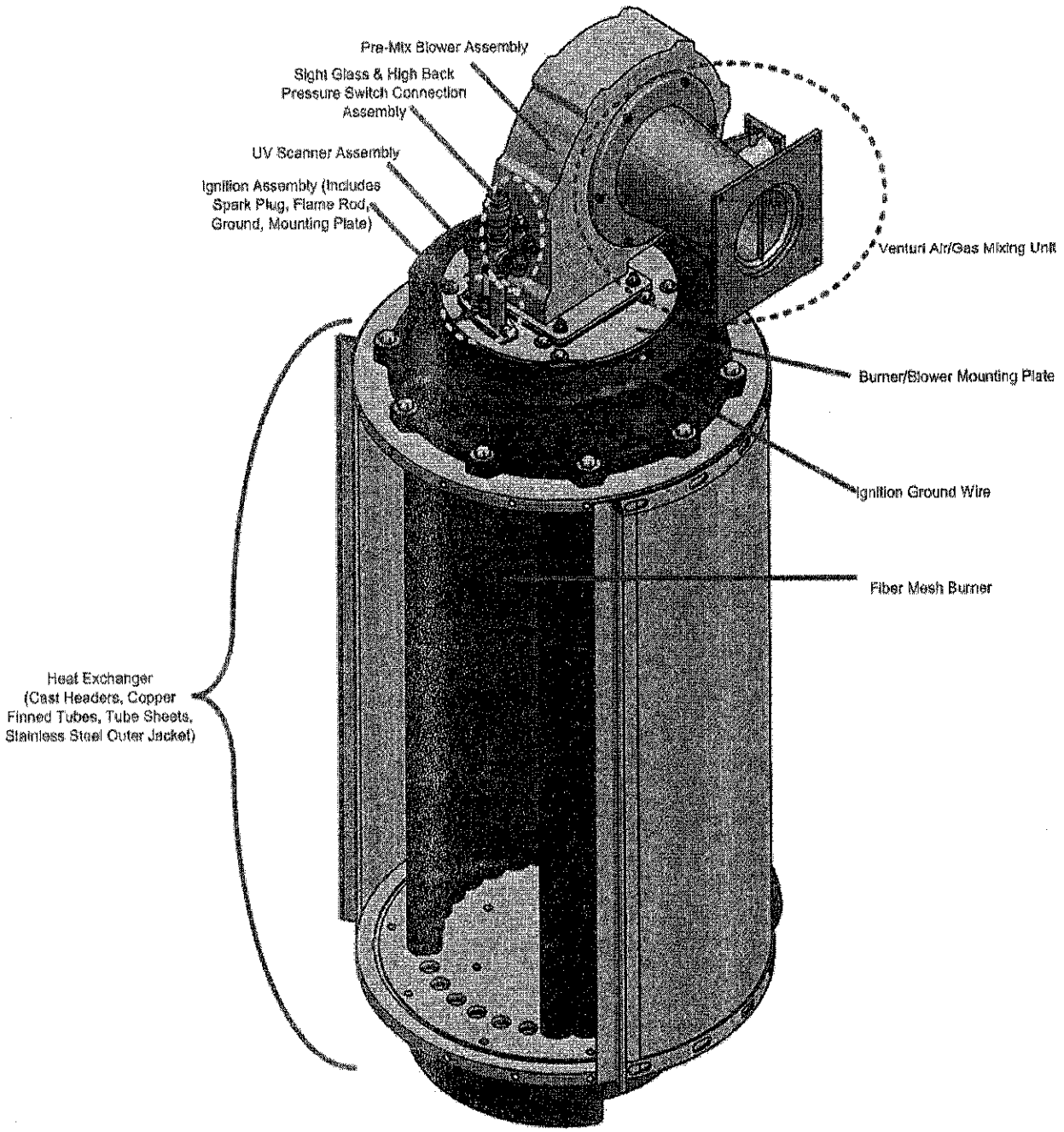

GASKETS TO BE REPLACED, IF REQUIRED AFTER INSPECTION OR MAINTENANCE

- A gasket kit is available for your boiler that includes the following:

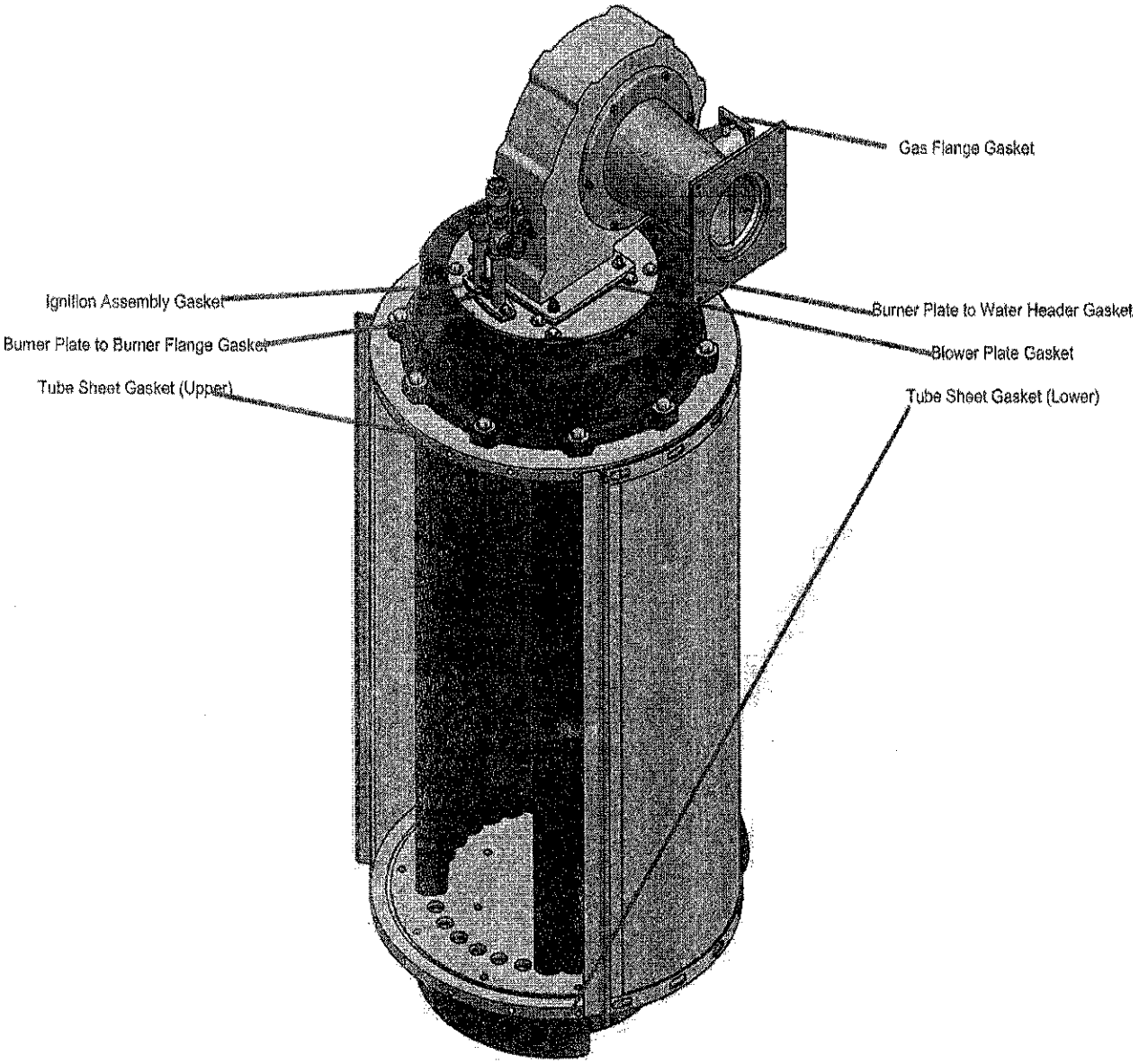

Parts Listing

Part Number	Description	RLN-750	RLN-1000	RLN-1500	RLN-2000
7-57-CHR102	Heat Exchanger			X	X
	Heat Exchanger	X	X		
2-20-000014	Ignition Assemblies			X	
2-20-000015	Ignition Assemblies				X
	Ignition Assemblies	X	X		
2-30-001639	Bekaert Burner			X	
2-30-001614	Bekaert Burner				X
2-30-001642	Bekaert Burner	X	X		
2-30-001637	EBM Blower			X	X
2-30-001641	EBM Blower	X	X		
2-30-000949	Venturi Gas / Air Mixing			X	X
2-30-000974	Venturi Gas / Air Mixing	X	X		
2-30-000975	Gas / Air Servo Regulator Gas Valve Nat Gas	X	X		
2-30-000939	Gas / Air Servo Regulator Gas Valve Nat Gas			X	X
	Gas / Air Servo Regulator Gas Valve Propane	X	X		
2-30-000975	Gas / Air Servo Regulator Gas Valve Propane			X	X
2-30-000114	1 ¼" Ball Valve lever handle			X	X
2-30-000113	1" Ball Valve lever handle	X	X		
2-30-000957	1 ¼" Ball Valve Tee handle			X	X
	1" Ball Valve Tee handle	X	X		
2-40-000907	Sola Control	X	X	X	X
2-40-000917	Sola Display	X	X	X	X
2-45-000915	12VDC Power Supply (comes with display)	X	X	X	X
2-45-000914	Sola Wire Plug Sets	X	X	X	X
2-30-000765	Clips (set of 12)	X	X	X	X
2-30-000799	Door Latch, Large, for Heat Exchanger Door	X	X	X	X
2-30-000798	Door Latch, Small, for electrical door	X	X	X	X
4-12-002000	Gasket Kit for Heat Exchanger / Burner (no o-rings) includes below 8 items			X	X
2-12-000702	Burner Plate to Header Gasket			X	X
2-12-000703	Ignition Plate to Burner Plate Gasket			X	X
2-12-000704	Blower to Burner Plate Gasket			X	X
2-12-000210	Fiberglass Rope Gasket for Rails			X	X
2-12-000559	Tadpole Gasket (Head to Outside Chamber)	X	X	X	X
2-12-000049	Fiberglass gasket for Inner S.S. jacket			X	X
2-12-001031	Venturi Flange Gasket			X	X
2-12-000565	Burner to mounting plate Gasket			X	X
	Burner Plate to Header Gasket	X	X		
	Ignition Plate to Burner Plate Gasket	X	X		
	Blower to Burner Plate Gasket	X	X		
2-40-000906	Low Gas Pressure Switch	X	X	X	X
2-30-001139	High Gas Pressure Switch	X	X	X	X
2-40-000908	Honeywell Sensor w/ 42" Lead	X	X	X	X

Part Number	Description	RLN-750	RLN-1000	RLN-1500	RLN-2000
2-40-000161	UV Scanner	X	X	X	X
2-30-000270	Fan Switch, Dwyer	X	X	X	X
2-30-000498	McDonnell Miller Flow Switch	X	X	X	X
2-30-001009	Temp / Pressure Gauge	X	X	X	X
2-30-000120	Safety Relief Valve 30psi ¾"	X			
2-30-000121	Safety Relief Valve 60psi ¾"	X	X	X	
2-30-000145	Safety Relief Valve 100psi ¾"	X	X	X	X
2-30-000166	Safety Relief Valve 160psi ¾"	X	X	X	X
2-30-000851	Safety Relief Valve 30psi 1"		X	X	
2-30-000951	Safety Relief Valve 60psi 1"			X	X
2-30-000221	Safety Relief Valve 30psi 1 ¼"				X
2-22-001013	Bonding Screws	X	X	X	X
2-45-001015	Terminal Block	X	X	X	X
2-45-000916	Tyco Connector for EBM blower power connection	X	X	X	X
2-45-001029	Tyco Female terminal - EBM blower power connection	X	X	X	X
2-45-000917	Molex connector for EBM blower PWM connection	X	X	X	X
2-45-001012	Molex female terminal - EBM blower PWM connection	X	X	X	X
2-35-001953	1/8" npt female x 1/4" tubing fitting Polytite	X	X	X	X
2-45-001025	Honeywell Ignition cable 500Ω per foot / 24" long	X	X	X	X
2-45-001026	Ignition cap terminal, washer for transformer	X	X	X	X
2-30-000739	Air Inlet Filter Kit			X	X
	Air Inlet Filter Kit	X	X		
2-30-000973	Seismic Anchor Kit	X	X	X	X
2-30-000797	Dedicated Circulator Pump 15 ft/hd, 130 GPM, single phase			X	X
2-30-000834	Dedicated Circulator Pump at 16 ft/hd, 65gpm, single phase	X	X		
2-30-000972	Thermostatic 3-way Mixing Valve, 2 ½", 125 psi, FF flange, 180F			X	X
2-30-000983	Thermostatic 3-way Mixing Valve, 150psi, 2" NPT, 180F	X	X		
	High Exhaust Temp Switch (H.E.T.)	X	X	X	X
2-60-000118	Adhesive Spray	X	X	X	X
2-40-000625	24VAC Power Supply	X	X	X	X
2-45-000339	3-position switch	X	X	X	X
2-45-000411	Red Alarm Light	X	X	X	X
2-40-000795	Black Push Button	X	X	X	X
2-45-000412	Green Call For Heat Light	X	X	X	X

Standard Warranty for Fulton Reliance Boilers

Warranty Valid for Models RLN

Ten (10) Year Thermal Shock Warranty
Fulton Heating Solutions guarantees the Reliance heat exchanger against thermal shock for a period of ten (10) years when the boiler is installed as a closed loop hot water boiler and is operated per the Installation and Operation Manual. This guarantee will cover damage due to thermal shock, such as leaks in the heat exchanger. This guarantee does not cover damage due to corrosion, scaling, sooting or improper installation or operation. The flow rate through the boiler must be consistent with the requirements in the equipment manual.

The guarantee is limited solely to the repair or replacement of the components listed above. An inspection must be performed by Fulton or their Representative to determine the cause of the damage. The warranty does not cover labor or freight.

Five (5) Year (60 Month) Material and Workmanship Warranty
The pressure vessel is covered against defective material or workmanship for a period of five (5) years from the date of shipment from the factory. Fulton will repair or replace F.O.B. factory any part of the equipment, as defined above, provided this equipment has been installed, operated and maintained by the buyer in accordance with approved practices and recommendations made by Fulton. The commissioning agency must also successfully complete and return the equipment Installation and Operation Checklists to Fulton's Quality Assurance department. This warranty covers any failure caused defective material or workmanship; however, waterside corrosion or scaling is not covered. Therefore, it is imperative that the boiler be installed in a closed loop as outlined in the Installation and Operation Manual.

Parts Warranty
Fulton will repair or replace F.O.B. factory any part of the equipment of our manufacture that is found to be defective in workmanship or material within one (1) year of shipment from the factory provided this equipment has been installed, operated and maintained by the buyer in accordance with approved practices and recommendations made by both Fulton and the component manufacturers and the commissioning agency has successfully completed and returned the equipment Installation and Operation Checklists to Fulton's Quality Assurance department.

General
Fulton shall be notified in writing as soon as any defect becomes apparent. This warranty does not include freight, handling or labor charges of any kind.

These warranties are contingent upon the proper sizing, installation, operation and maintenance of the boiler and peripheral components and equipment. Warranties valid only if installed, operated, and maintained as outlined in the Fulton Installation and Operation Manual.

No Sales Manager or other representative of Fulton other than the Quality Manager or an officer of the company has warranty authority. Fulton will not pay any charges unless they were pre-approved, in writing, by the Fulton Quality Manager.

This warranty is exclusive and in lieu of all other warranties, expressed or implied, including but not limited to the implied warranties of merchantability and fitness for a particular purpose. Fulton shall in no event be liable for any consequential or incidental damages arising in any way, including but not limited to any loss of profits or business, even if the Fulton Companies has been advised of the possibility of such damages. Fulton's liability shall never exceed the amount paid for the original equipment found to be defective.

Excessive cycling will reduce the life of ANY boiler. Verify that your system is properly designed and check cycling rate according to maintenance procedures listed in this manual.

To activate the warranty for this product, the appropriate commissioning sheets must be completed and returned to the Fulton Quality Assurance department for review and approval.

Fulton

9/25/2009

No part of this Installation, Operation, and Maintenance manual may be reproduced in any form or by any means without permission in writing from the Fulton Companies.

Fulton Boiler Works, Inc., Fulton Heating Solutions, Inc. & Fulton Thermal Corporation are part of the Fulton Group of Companies, a global manufacturer of steam, hot water and thermal fluid heat transfer systems.

ATT. D

Estimated Annual Emmissions Calculation

BOILER DESCRIPTION

26,280,000.00 = total cubic feet of natural gas running 24/365/2 = 1/2 year full time operation.

	High Fire			
Gas input	**6000**	cfh		
Yearly Run Hours	**4380**			
Pollutants:	ppm, corected 3%O2	lbs/hr	lbs/MM (input)	**tons/yr**
NOx	**30**	0.2118	0.0353	**0.4638**
SOx	X	0.0036	0.0006	**0.0079**
CO	**30**	0.1314	0.0219	**0.2877**
Total Particulates	X	0.0456	0.0076	**0.0999**
Total Organics	X	0.0660	0.0110	**0.1445**
Lead	X	0.000002	0.000000	**0.0000**
Volatile Organic Compunds	X	0.0330	0.0055	**0.0723**

1. Gas Input in CFH: ***(2,000,000 BTU/hr input boiler is 2,000 x 3 boilers = 6000 CFH)***
2. Yearly run hours ***(24 hr/day x 365 day/yr)/2 = 4380 hr/yr)*** [6 month heating season]
3. NOx emissions in ppm ***Measured Value provided by Client***
4. CO emissions in ppm ***Measured Value provided by Client***

Note: The emissions numbers for the other pollutants (SOx, total particulates, total organics, lead and VOC's) were achieved using calculation AP 42 as published by the US EPA. This calculation method determines the emissions components that cannot be measured with a combustion analyzer. The NOx and CO are the only categories measured with the combustion analyzers in the client laboratory.

Maximum Annual Potential to Emit Calculation

BOILER DESCRIPTION

52,560,000.00 = total cubic feet of natural gas running 24/365 = 1 year full time operation.

	High Fire			
Gas input	**6000**	cfh		
Yearly Run Hours	**8760**			
Pollutants:	ppm, corected 3%O2	lbs/hr	lbs/MM (input)	**tons/yr**
NOx	**30**	0.2118	0.0353	**0.9275**
SOx	X	0.0036	0.0006	**0.0158**
CO	**30**	0.1314	0.0219	**0.5755**
Total Particulates	X	0.0456	0.0076	**0.1997**
Total Organics	X	0.0660	0.0110	**0.2891**
Lead	X	0.000004	0.000001	**0.0000**
Volatile Organic Compunds	X	0.0330	0.0055	**0.1445**

1. Gas Input in CFH: ***(2,000,000 BTU/hr input boiler is 2,000 x 3 boilers = 6000 CFH)***
2. Yearly run hours ***(24 hr/day x 365 day/yr = 8760 hr/yr)***
3. NOx emissions in ppm ***Measured Value provided by Client***
4. CO emissions in ppm ***Measured Value provided by Client***

Note: The emissions numbers for the other pollutants (SOx, total particulates, total organics, lead and VOC's) were achieved using calculation AP 42 as published by the US EPA. This calculation method determines the emissions components that cannot be measured with a combustion analyzer. The NOx and CO are the only categories measured with the combustion analyzers in the client laboratory.